TS90, TS100, TS110 REPAIR MANUAL CONTENTS

SECTION 1 -- GENERAL INFORMATION
SECTION 2 -- ENGINE
SECTION 3 -- ELECTRICAL SYSTEM
SECTION 4 -- HYDRAULIC SYSTEMS
SECTION 5 -- BRAKING AND STEERING SYSTEMS
SECTION 6 -- POWER TRAIN
SECTION 7 -- FRONT AXLE
SECTION 8 -- POWER TAKE OFF
SECTION 9 -- AIR CONDITIONING
SECTION 10 -- SPECIAL TOOLS

SECTION 1
GENERAL INFORMATION
CONTENTS

ENGINE SPECIFICATIONS 1-2
ELECTRICAL SYSTEM SPECIFICATIONS 1-19
HYDRAULIC SYSTEM SPECIFICATIONS 1-21
BRAKING SYSTEM SPECIFICATIONS 1-40
STEERING SPECIFICATIONS 1-41
CLUTCHES SPECIFICATIONS 1-44
TRANSMISSION SYSTEMS SPECIFICATIONS 1-45
FRONT AXLE SPECIFICATIONS 1-61
MECHANICAL REAR WHEEL DRIVE SPECIFICATIONS 1-63
FRONT AXLE MECHANICAL TRANSMISSION SPECIFICATIONS 1-65
TWO WHEEL DRIVE AXLE SPECIFICATIONS 1-69
INDEPENDENT POWER TAKE OFF SYSTEMS SPECIFICATIONS 1-70
AIR CONDITIONING SPECIFICATIONS 1-72

ENGINE SPECIFICATIONS

Model		**TS80**	**TS90**	**TS90**	**TS100**	**TSS110**
(T=Turbocharged)		N/A	N/A	N/A	TURBO	TURBO
Emissionised		NO	NO	YES	YES	YES
No of Cylinders		4 (450 NF)	4 (450 NA)	4 (450 NE)	4 (450 T/PF)	4 (450 T/PD)
Bore	mm	111.8	111.8	111.8	111.8	111.8
	ins	4.4	4.4	4.4	4.4	4.4
Stroke	mm	127.0	127.0	127.0	127.0	127.0
	ins	5.0	5.0	5.0	5.0	5.0
Displacement	cu cm	4987	4987	4987	4987	4987
	cu in	304	304	304	304	304
Compression Ratio		17:5–1	17:5–1	17:5–1	17:5–1	17:5–1
Cylinder Bore Compression at cranking speed of 200 R.P.M	bar	25.5	25.5	25.5	25.5	25.5
	lbs in^2	375	375	375	375	375
Firing Order		1342	1342	1342	1342	1342
Idle Speed Revs/min ± 50		750	750	750	750	750
Maximum no Load Speed Revs/min		2320	2320	2320	2320	2320
Rated Engine Speed		2170	2170	2170	2170	2070

CYLINDER BLOCK

Taper of Cylinder Bore	0.025mm (0.001 in) Repair Limit 0.127mm (0.005 in) Wear Limit
Cylinder Bore out of Round	0.03mm (0.0015 in) Repair Limit 0.127mm (0.005 in) Wear Limit
Cylinder Bore Diameters	111.778-111.841mm (4.4007-4.4032 in)
Rear Oil Seal Bore Diameter	140.77-140.87mm (5.542-5.546 in)
Block to Head Surface Flatness	0.08mm (0.003 in) in any 152mm (6 in) 0.03mm (0.001 in) in any 25.40mm (1 in)

CYLINDER HEAD

Valve Guide Bore Diameter	9.469-9.495mm (0.3728-0.3738 in)
Head to Block Surface Flatness	0.03mm (0.001 in) in any 25.4mm (1 in), or 0.127mm (0.005in) overall limit

EXHAUST VALVES

Face Angle	44°15'-44°30' Relative to the Head of Valve
Stem Diameter	Std :9.401-9.421mm (0.3701-0.3709 in) 0.076mm (0.003 in) Oversize :9.477-9.497mm (0.3731-0.3739 in) 0.38mm (0.015 in) Oversize :9.781-9.802mm (0.3851-0.3859 in) 0.030 in (0.76mm) Oversize :10.163-10.183mm (0.4001-0.4009 in)
Head Diameter	42.88-43.13mm (1.688-1.698 in)
Stem to Guide Clearance	0.048-0.094mm (0.0019-0.0037 in)
Lash Clearance (Cold)	0.43-0.53mm (0.017-0.021 in)

INTAKE VALVES

Face Angle	29°15'-29°30' Relative to Head of Valve
Stem Diameter	Std :9.426-9.446mm (0.3711-0.3719 in) 0.076mm (0.003 in) Oversize :9.502-9.522mm (0.3741-0.3749 in) 0.381mm (0.015 in) Oversize :9.807-9.827mm (0.3861-0.3869 in) 0.762mm (0.030 in) Oversize :10.188-10.208mm (0.4011-0.4019 in)
Head Diameter	47.37-47.63mm (1.865-1.875 in)
Stem to Guide Clearance	0.023-0.069mm (0.0009-0.0027 in)
Lash Clearance (Cold)	0.36-0.46mm (0.014-0.018 in)

VALVE SPRINGS

Number per Valve	1
Free Length	60.7mm (2.39 in)
Length, loaded at 27.7-31.3kg (61.69 lb)	48.26mm (1.900 in)
Length, loaded at 61-69kg (135-153 lb)	35.69mm (1.405 in)

VALVE TIMING

Intake Opening	12° Before Top Dead Centre
Intake Closing	38° After Bottom Dead Centre
Exhaust Opening	48° Before Bottom Dead Centre
Exhaust Closing	12° After Top Dead Centre

VALVE INSERTS

Insert Oversize	Exhaust Valve Insert Counter bore Diameter in Cylinder Head	Intake Valve Seat Insert Counter bore Diameter in Cylinder Head
0.254mm (0.010 in)	44.17–44.20mm (1.739–1.740 in)	50.01–50.04mm (1.969–1.970 in)
0.508mm (0.020 in)	44.42–44.45mm (1.749–1.750 in)	50.27–50.29mm (1.979–1.980 in)
0.762mm (0.030 in)	44.68–44.70mm (1.759–1.760 in)	50.52–50.55mm (1.989–1.990 in)

VALVE SEATS

Exhaust Valve Seat Angle	45°00’ – 45°30’
Intake Valve Seat Angle	30°00’ – 30°30’
Interference Valve Face Angle to Valve Seat Angle	0°30’ – 1°15’
Concentricity With Guide Diameter	0.051mm (0.002 in) Total Indicator Reading Max
Seat Width Exhaust Valve Intake Valve	1.8–2.3mm (0.072–0.092 in) 1.9–2.5mm (0.078–0.098 in)

CAMSHAFT IDLER GEAR

Number of teeth	47
End Play	0.076–0.35mm (0.003–0.014 in)
Bushing Inside Diameter	50.813–50.838mm (2.005–2.0015 in)
Adaptor Outside Diameter	50.762–50.775mm (1.9985–1.9990 in)
Backlash with Crankshaft Gear	0.15–0.46mm (0.006–0.018 in)
Backlash with Camshaft Gear	0.025–0.381mm (0.001–0. 015 in)
Backlash with Fuel Injection Pump	0.10–0.15mm (0.004–0.006 in)

CAMSHAFT GEAR

Number of Teeth	52
Timing Gear Backlash	0.025–0.38mm (0.001–0.015 in)

ROCKER ARM SHAFT	
Shaft Diameter	25.40–25.43mm (1.000–1.001 in)
Shaft Support Internal Diameter	25.45–25.20mm (1.002–1.004 in)
ROCKER ARM	
Inside Diameter	25.48–25.50mm (1.003–1.004 in)
TAPPETS	
Clearance to Bore	0.015–0.053mm (0.0006–0.0021 in)
Tappet Diameter	25.118–25.130mm (0.9889–0.9894 in)
Tappet Bore Diameter	25.15–25.17mm (0.9900–0.9910 in)
CAMSHAFT	
Bearing Journal Diameter	60.693–60.719mm (2.3895–2.3905 in)
Bearing Clearance	0.025–0.076mm (0.0010–0.0030 in)
End Play	0.051–0.18mm (0.0020–0.0070 in)
CONNECTING RODS	
Small End Bushing (Internal Diameter) Normally Aspirated Turbocharged	 38.113–38.120mm (1.5005–1.5008 in) 41.288–41.259mm (1.6255–1.6258 in)
Clearance Bushing to Piston Pin	0.013–0.025mm (0.0005–0.0010 in)
Side Float	0.13–0.33mm (0.0050–0.0130 in)
Maximum Twist	0.30mm (0.0120 in)
Maximum Bend	0.10mm (0.0040 in)
PISTON PIN	
Outside Diameter Normally Aspirated Engine Turbocharged Engine	 38.095–38.100mm (1.4998–1.5000 in) 41.270–41.275mm (1.6248–1.6250 in)
PISTONS	
Skirt to Cylinder Clearance Naturally Aspirated	 0.140–0.171mm (0.0055–0.0067 in) – *New, unrun engines* 0.140–0.28mm (0.0055–0.011 in) – *Run engines*
Skirt to Cylinder Clearance Turbocharged	 0.162–0.188mm (0.0064–0.0074 in) – *New, unrun engines* 0.162–0.28mm (0.0064–0.011 in) – *Run engines*
Taper (Out of Round)	0.063–0.127mm (0.0025–0.0050 in)
Grading Diameter (at Right Angles to Piston Pin)	111.64–111.74mm (4.3951–4.3991 in) 0.0127mm (in increments of 0.0005 in)
Piston Pin Clearance	0.0030–0.0140mm (0.00012–0.00055 in) at 21°C (70°F)
Piston Crown to Block Face, Naturally Aspirated Turbocharged	 0.28–0.58mm (0.011–0.023 in) 0.0–0.3mm (0.0–0.012 in)

PISTON RINGS

Compression rings, Number and Location	2 off -1st and 2nd from the top of the piston
Naturally Aspirated, Top Compression Ring 2nd Compression Ring	 Parallel Sides-Inner Chamfer or no Chamfer Straight Face-Inner Step
Turbocharged, Top Compression Ring 2nd Compression Ring	 Keystone Tapered With Internal Chamfer to Top Straight Face-Inner Step
Oil Control, Number and Location Type	 1 off,-Directly above the Piston Pin, Slotted With Expander
Side Face Clearance To Ring Groove, Top Compression Ring 2nd Compression Ring Oil Control Ring	 0.112-0.155mm (0.0044-0.0061 in) 0.099-0.142mm (0.0039-0.0056 in) 0.061-0.104mm (0.0024-0.0041 in)
Gap Width, Top Compression Ring 2nd Compression Ring Oil Control Ring	 0.38-0.84mm (0.015-0.033 in) 0.66-1.12mm (0.026-0.044 in) 0.38-0.84mm (0.015-0.033 in)

CRANKSHAFT

Main Journal Diameter-	85.631mm (3.3713 in) 85.656mm (3.3723 in)
Main Journal Length (except thrust, rear, or intermediate)	36.96-37.21mm (1.455-1.465 in)
Main Journal Wear Limits	0.127mm (0.005 in) Maximum
Main and Crankpin Fillet Radius	3.048-3.556mm (0.12-0.14 in)
Thrust Bearing Journal Length	37.06-37.11mm (1.459-1.461 in)
Intermediate Bearing Journal Length	36.96-37.21mm (1.455-1.465 in)
Rear Bearing Journal Length	37.97-38.48mm (1.495-1.515 in)
Crankpin Journal Length	42.62-42.72mm (1.678-1.682 in)
Crankpin Diameter	69.840-69.850mm (2.749-2.7500 in)
End Play	0.10-0.20mm (0.004-0.008 in)
Crankpin Out of Round	0.005mm (0.0002 in) Total Indicator Reading
Taper Surface Parallel to Centre Line of Main Journal	0.005mm (0.0002 in)
Crankshaft Rear Oil Seal Journal Diameter	122.12-122.28mm (4.808-4.814 in)
Crankshaft Pulley Journal Diameter	44.45-44.48mm (1.750-1.751 in)
Crankshaft Timing Gear Journal Diameter	46.23-46.25mm (1.820-1.821 in)
Crankshaft Flange Runout	0.038mm (0.0015 in) Maximum

CRANKSHAFT DRIVE GEAR

Number of teeth	26

MAIN BEARING

Liner length (except thrust liner)	27.94-28.19mm (1.10-1.11 in)
Liner Length (Thrust Liner)	39.91-39.96mm (1.453-1.455 in)
Vertical Assembled Bearing Clearance	0.055-0.117mm (0.0021-0.0046 in)

CRANKPIN BEARINGS

Liner Length	35.56-35.81mm (1.40-1.41 in)
Vertical Assembled Bearing Clearance	0.035-0.094mm (0.0014-0.0037 in)

CRANKSHAFT RE-GRINDING

When re-grinding a crankshaft the main and crankpin journal diameters should be reduced the same amount as the undersize bearings used, and the following dimensions apply. The rear end of the crankshaft should be located on the 60° Chamfer of the pilot bearing bore.

UNDERSIZE BEARING AVAILABLE	MAIN JOURNAL DIAMETERS
0.051mm (0.002 in)	85.580-85.593mm (3.3693-3.3698 in)
0.254mm (0.010 in)	85.390-85.402mm (3.3618-3.3623 in)
0.508mm (0.020 in)	85.136-85.148mm (3.3518-3.3523 in)
0.762mm (0.030 in)	84.882-84.894mm (3.3418-3.3423 in)
1.016mm (0.040 in)	84.628-84.640mm (3.3318-3.3323 in)
UNDERSIZE BEARING AVAILABLE	**CRANKPIN JOURNAL DIAMETERS**
0.051mm (0.002 in)	69.789-69.799mm (2.7476-2.7480 in)
0.254mm (0.010 in)	69.956-69.606mm (2.7400-2.7404 in)
0.508mm (0.020 in)	69.342-69.352mm (2.7300-2.7304 in)
0.762mm (0.030 in)	69.088-69.098mm (2.7200-2.7204 in)
1.016mm (0.040 in)	68.834-68.844mm (2.7100-2.7104 in)

BALANCER

Gear Backlash	0.05-0.25mm (0.002-0.010 in)
Shaft to bushing clearance	0.0127.0-0.038mm (0.0005-0.0015in)
Shaft Diameter	25.133-25.40mm (0.9895-1.000 in)
Backlash between balancer / crankshaft gear	0.05-0.20mm (0.002-0.008 in)
End float balancer gear to support	0.20-0.51mm (0.008-0.020 in)

FLYWHEEL

Ring Gear Runout	0.63mm (0.025 in)
Flywheel Runout	0.27mm (0.005 in)
Maximum depth to be skimmed from face	3 mm (0.118 in)

OIL PUMP

Rotor Clearance	0.025-0.15mm (0.001-0.006 in)
Rotor to Pump Housing Clearance	0.15-0.28mm (0.006-0.011 in)
Rotor End Play	0.025-0.089mm (0.001-0.0035 in)
Oil Pressure	1.24 bar (18 lbs in^2) minimum at idle speed, 2.76 bar (40 lbs in^2) minimum at rated speed
Pump Gear to Camshaft Gear Backlash	0.40-0.56mm (0.016-0.022 in)

OIL FILTER SUPPORT

Relief Valve, Operating Pressure	4.0 bar (59 lb in^2)
Flow Rate	68 litres/min (15 imp gals/min) 18 US gals/min
Relief Valve, Spring Free Length	52.8mm (2.08 in)

Temperature	Oil Viscosity and Type	API Classification	Engine Oil & Filter Change Period (hours)
-12°C (Below 10°F)	Low Ash , SAE 5W or Low Ash SAE 5W/20 or SAE 10W-30	SF/CD / CF-4	150 150 150
-12°C to 4°C (10°F to 40°F)	Low Ash , SAE 10W Series 3 or SAE 10W-30	SF/CD / CF-4	150 300
0°C to 32°C (32°F to 90°F)	Low Ash , SAE 30W Series 3 or SAE 10W-40	SF/CD / CF-4	300 300
Above 24°C (75°F)	Low Ash , SAE 30W Series 3 or SAE 15W-40	SF/CD / CF-4	300

NOTE: *When using diesel fuel with a sulphur content below 1.0%, Series 3 diesel engine oil with an A.P.I. classification of CD may be used instead of CF-4 oil , but the oil and filter interval must be reduced to 150 hours .*

When using diesel fuel with a sulphur content between 1% and 1.3% use only oils listed above but reduce the oil and filter change period to every 50 hours .

ENGINE OIL CAPACITIES (With Oil Filter)

Model	Litres	Imp Gals	U.S. Gals
4 CYL	11.4	2.5	3.0

THERMOSTAT

Opening Temperature	79-83°C (174-181°F)
Fully Open	93-96°C (199-205°F)

RADIATOR CAP

Opening Pressure	0.9 bar (13 lbs in^2)

WATER PUMP

Type	Centrifugal
Drive	Multi V Belt

COOLING SYSTEM CAPACITIES

Model	Litres	Imp gals	U.S. gals
4 CYL (with cab)	16	3.5	4.2
4 CYL (less cab)	14.5	3.2	3.8

COOLING FLUID
Content Mixture - Use Anti-freeze (50%) plus clean, soft water (50%)
Type Ambra Agriflu (NH 900 A)

MINIMUM HARDWARE TIGHTENING TORQUES

IN FOOT POUNDS (NEWTON-METERS) FOR NORMAL ASSEMBLY APPLICATIONS

INCH HARDWARE AND LOCKNUTS

NOMINAL SIZE	SAE GRADE 2		SAE GRADE 5		SAE GRADE 8		LOCKNUTS		NOMINAL SIZE
	UNPLATED or PLATED SILVER	PLATED W/ZnCr GOLD	UNPLATED or PLATED SILVER	PLATED W/ZnCr GOLD	UNPLATED or PLATED SILVER	PLATED W/ZnCr GOLD	GR.B w/GR5 BOLT	GR.C w/GR8 BOLT	
1/4	55* (6.2)	72* (8.1)	86* (9.7)	112* (13)	121* (14)	157* (18)	61* (6.9)	86* (9.8)	1/4
5/16	115* (13)	149* (17)	178* (20)	229* (26)	250* (28)	324* (37)	125* (14)	176* (20)	5/16
3/8	17 (23)	22 (30)	26 (35)	34 (46)	37 (50)	48 (65)	19 (26)	26 (35)	3/8
7/16	27 (37)	35 (47)	42 (57)	54 (73)	59 (80)	77 (104)	30 (41)	42 (57)	7/16
1/2	42 (57)	54 (73)	64 (87)	83 (113)	91 (123)	117 (159)	45 (61)	64 (88)	1/2
9/16	60 (81)	77 (104)	92 (125)	120 (163)	130 (176)	169 (229)	65 (88)	92 (125)	9/16
5/8	83 (112)	107 (145)	128 (174)	165 (224)	180 (244)	233 (316)	90 (122)	127 (172)	5/8
3/4	146 (198)	189 (256)	226 (306)	293 (397)	319 (432)	413 (560)	160 (217)	226 (306)	3/4
7/8	142 (193)	183 (248)	365 (495)	473 (641)	515 (698)	667 (904)	258 (350)	364 (494)	7/8
1	213 (289)	275 (373)	547 (742)	708 (960)	773 (1048)	1000 (1356)	386 (523)	545 (739)	1

NOTE: Torque values shown with * are inch pounds.

IDENTIFICATION
CAP SCREWS AND CARRIAGE BOLTS

SAE GRADE 2

SAE GRADE 5

SAE GRADE 8

REGULAR NUTS

SAE GRADE 5 HEX NUTS

SAE GRADE 8 HEX NUTS

LOCKNUTS

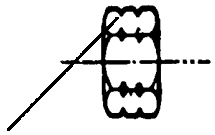
GRADE IDENTIFICATION
GRADE A NO NOTCHES
GRADE B ONE CIRCUMFERENTIAL NOTCH
GRADE C TWO CIRCUMFERENTIAL NOTCHES

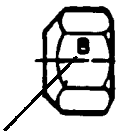
GRADE IDENTIFICATION
GRADE A NO MARKS
GRADE B LETTER B
GRADE C LETTER C

GRADE IDENTIFICATION
GRADE A NO MARKS
GRADE B THREE MARKS
GRADE C SIX MARKS
MARKS NEED NOT BE LOCATED AT CORNERS

TORQUE VALUES - VARIOUS	Nm	lbf ft	Kgf m
Main Bearing Bolts	197	145	20.0
Connecting Rod Bolts	149	110	15.2
Cylinder Head Bolts (with Engine Cold)	217	160	22.0
Intake Manifold-to-Cylinder Head	35	26	3.5
Exhaust Manifold-to-Cylinder Head	38	28	3.9
Exhaust Pipe-to-Flange	31	23	3.2
Flywheel-to-Crankshaft	197	145	20.0
Oil Pan Drain Plug	41	30	4.2
Valve Rocker Cover Bolts	24	18	2.4
Crankshaft Pulley-to-Crankshaft	224	210	23.0
Self-Locking Screw - Valve Rocker Arm	24	18	2.4
Injector Attachment Bolts	23	17	2.3
Cover Bolts	31	23	3.1
Oil Pump to Block	23	17	2.3
Water Pump-to-Cylinder Block	48	35	3.6
Water Pump Cover-to-Pump	27	20	2.8
Oil Pan-to-Cylinder Block (Cast)	38	28	3.9
Injector Line Nuts	24	18	2.4
Leak-off Tube Banjo Fitting Bolts	11	8	1.1
Injection Pump-to-Front Cover	24	18	2.4
Camshaft Idler Drive Gear-to-Block	237	175	24.0
Front Cover-to-Cylinder Block	24	18	2.4
Thermostat Housing Bolts	24	18	2.4
Camshaft Gear Bolt	69	51	7.0
Camshaft Rear Gear Plate Bolts	47	35	4.8
Oil Filter Adaptor Bolts	42	31	4.2
Oil Filter Mounting Bolt Insert	34	25	3.5
Starting Motor-to-Rear Adaptor Plate	31	23	3.2
Injection Pump-to-Gear Nut	79	58	8.0
Oil Pressure Switch Assembly	31	23	3.2
Turbocharger-to-Exhaust Manifold Nut	44	33	4.5
Fan Blade to Support Body	27	21	2.8
Crankshaft Rear Oil Seal Retainer -			
Initial Tightening	12	9	1.2
Final Tightening	23	17	2.3
Belt Tensioner Pulley Bolt	54	40	5.5
Temperature Senders	20	15	2.0
Tensioner to Water Pump Bolt	54	40	5.5
Idler Pulley Bolt	54	40	5.5
Pump Connector to Block	24	18	2.4

CYLINDER BLOCK PLUG TORQUES	Nm	lbf ft	Kgf m
1/4 in-27 NPT	11	8	1.1
1/4 in-18 NPT	29.8	22	3.0
3/4 in-18 NPT	38	28	3.8
3/4 in-14 NPT	27	20	2.7

COOLING

THERMOSTAT
Opening Temperature 79-83°C (174-181°F)
Fully Open 93-96°C (199-205°F)

RADIATOR CAP
Opening Pressure 0.9 bar (13 lbs in^2)

WATER PUMP
Type Centrifugal
Drive Multi 'V'

COOLING SYSTEM CAPACITIES

Model	Litres	Imp Gals	U.S. Gals
4 CYL with cab	16	3.5	4.2
4 CYL less cab	14.5	3.2	3.8

COOLING FLUID
Content Mixture - Water 50%, Antifreeze 50% . If the recommended antifreeze is not used, a heavy duty antifreeze must be used with a 5% solution of Inhibitor. This inhibitor must be added to the cooling system and is available from Dealers Part No FW 15.

TORQUES

TORQUE VALUES - VARIOUS	Nm	lbf ft	Kgf m
Water Pump-to-Cylinder Block	48	35	3.6
Water Pump Cover-to-Pump	27	20	2.8
Thermostat Housing Bolts	24	18	2.4
Fan Blade to Support Body	27	21	2.8
Temperature Senders	20	15	2.0

LUBRICATION

Oil Pump

Rotor Clearance	0.025-0.15mm (0.001-0.006 in)
Rotor to Pump Housing Clearance	0.15-0.28mm (0.006-0.011 in)
Rotor End Play	0.025-0.089mm (0.001-0.0035 in)
Oil Pressure	1.24 bar (18 lb/in^2) minimum at idle speed, 2.76 bar (40 lb/in^2) minimum at rated speed
Pump Gear to Camshaft Gear Backlash	0.40-0.56mm (0.016-0.022 in)

Oil Filter Support

Relief Valve, Operating Pressure	4.0 bar (59 lbs in^2)
Flow Rate	68 litres/min (15 imp gals/min) 18 US gals/min

Oil Type

Temperature	Oil Viscosity and Type	API Classification	Engine Oil & Filter Change Period (hours)
-12°C (Below 10°F)	Low Ash , SAE 5W or Low Ash SAE 5W/20 or SAE 10W-30	CF-4/SG	150 150 150
-12°C to 4°C (10°F to 40°F)	Low Ash , SAE 10W Series 3 or SAE 10W-30	CF-4/SG	150 300
0°C to 32°C (32°F to 90°F)	Low Ash , SAE 30W Series 3 or SAE 10W-40	CF-4/SG	300 300
Above 24°C (75°F)	Low Ash , SAE 30W Series 3 or SAE 15W-40	CF-4/SG	300

When using diesel fuel with a sulphur content between 1% and 1.3% use only oils listed above but reduce the oil and filter change period to every 50 hours .

ENGINE OIL CAPACITIES (With Oil Filter)

Model	Litres	Imp Gals	U.S Gals
4 CYL	11.4	2.5	4.8

TORQUE VALUES

TORQUE VALUES - VARIOUS	Nm	lbf ft	Kgf m
Oil Pan Drain Plug	41	30	4.2
Oil Pump to Block	23	17	2.3
Oil Filter Adaptor Bolts	42	31	4.2
Oil Filter Mounting Bolt Insert	34	25	3.5
Oil Pressure Switch Assembly	31	23	3.2
Idler Pulley Bolt	54	40	5.5
Pump Connector to Block	24	18	2.4

FUEL GENERAL

Turbocharger type: Garrett T250

LUCAS C.A.V. pump

Type DPS or DPS 200 Series, integral speed governor and advance device

Fuel System - General	**MODEL**				
	8×2	**16×4**	**12×12**	**24×24**	**16×16**
Fuel Tank Capacity	130 litres 28 imp. galls 34 U.S. galls		160 litres 35 imp. galls 42 U.S. galls		
Fuel Filter Type	Single Disposable Element and Separator				
Fuel Filter Change Interval	600 hours	600 hours	600 hours	600 hours	600 hours
Injector Nozzle Opening Pressure Reset at	DPS = 240–250 bar (3480–3590 lbs in^2) 225 bar (3260 lbs in^2)		DP200 = 290 – 300 bar (4230–4350 lbs in^2) –275 bar (–3990 lbs in^2)		
Injection Pump Type	DPS Distributor	DPS Distributor	DP203 Distributor	DP203 Distributor	DP203 Distributor
Pump Rotation Firing Order	Clockwise 1342	Clockwise 1342	Clockwise 1342	Clockwise 1342	Clockwise 1342
Injector Change Interval	1200 hours	1200 hours	1200 hours	1200 hours	1200 hours
Maximum No-Load Speed	2320 (except TS110 Turbo = 2220)				
Idle Speed ± 50	750	750	750	750	750
Rated Speed	2170 (except TS110 Turbo = 2070)				

TORQUE VALUES

DESCRIPTION	**N·m**	**ft. lbs.**	**kgf/m**
Throttle Cable Locknuts	50	37	5.1
Throttle Lever Stop Bolt Locknut	10	7	1.0
Fuel Tank Strap Retaining Nut	2.5	1.8	0.25
Fuel Tank Strap Locknut	25	18	2.5
Fuel Tank Shutoff Valve	14	10	1.4
Fuel Tank Leak-Off Elbow	14	10	1.4
Leak-Off Pipe to Elbow	24	18	2.4
Thermostart Plug	37	27	3.8
Thermostart Pipe Union	10	7	1.0
Leak-Off Pipe to Injector Line	24	18	2.4
Fuel Tank Sender Retaining Screws	2.5	1.8	0.25
Fuel Filter Element Retaining Bolt	10	7	1.0
Fuel Filter Retaining Bolts	30	22	3.1
Exhaust Muffler Retaining Clamp	35	26	3.6
Air Cleaner Retaining Bolts	55	40	5.6
Air Cleaner Hose Clamps	2.5	1.8	0.25
Air Cleaner Restriction Indicator Switch	12	9	1.2

AIR CLEANERS

AIR CLEANER

Type	Dry, Dual Element
Change Interval	600 hours (or more frequently when operating in adverse conditions)
Type	Oil Bath
Service Interval	10 and 50 hours
Oil Type	API CF-4 15G

TORQUE VALUES

DESCRIPTION	ft. lbs.	N·m	kgf/m
Air Cleaner Retaining Bolts	40	55	5.6
Air Cleaner Hose Clamps	1.8	2.5	0.25
Air Cleaner Restriction Indicator Switch	9	12	1.2

ELECTRIC LIFT PUMP

Type	Filter head mounted 12 volt supply Electric Lift Pump
Pump operation	Mechanically Actuated
Output Pressure at 2000 revs/min	0.27-0.47 bar (3-6 lbs in^2)

INJECTORS

INJECTORS	LUCAS C.A.V.
Adjustment	Variable
Quantity, nozzle holes	5 Hole
Pressure Setting	240-250 bar (3480-3590 lbs in^2) (non emissionized). 290-300 bar (4230-4350 lbs in^2) (emissionized)
Injector change interval	1200 hours

TORQUE VALUES

Application	**Nm**	**ft. lbs.**	**kgf/m**
Injector Nozzle Retaining Nut	48	35	4.9
Injector Retaining Bolts	22	17	2.2
Injector Leak-Off Line Banjo Bolts	12	10	1.2
High Pressure Gland Nuts at Injector	32	23	3.3
High Pressure Gland Nuts at Fuel Pump	33	23	3.3

INJECTION PUMP

LUCAS C.A.V. pump

Type DPS/DP203	Series Distributor type, integral speed governor and advance device
Pump rotation	Clockwise
Firing order	1342

Model	TS80	TS90	TS90	TS100	TS110
Pump Type	DPS	DPS	DP203	DP203	DP203
Engine Timing BTDC Engine Position	-	-	28°	28°	28°
Pump Timing, Locking Bolt Position Overcheck	-	-	29°	29°	29°
Pump Scribe Mark to Engine Plate Timing Mark	0°	0°	-	-	-
Pump Internal Timing	262	263	-	-	-

TORQUE VALUES

DESCRIPTION		Nm	lbf.ft
Fuel Inlet Connection		59	43
Delivery Valve Holders		41	30
Fuel Injection Pump to Front Plate	– DPS	40	29
	– DP203	20–24	15–18
Front Plate Bolts Cover Bolts		22	16
Pump Locking Bolt DP203		13	10
Drive Gear		75–81	55–60

TURBOCHARGER

TURBOCHARGER

Compressor Shaft Axial End Play	0.025 mm - 0.10 mm (0.001in - 0.004in)
Bearing Radial Clearance	0.4 mm - 0.5 mm (0.016in - 0.021in)

TORQUE VALUES

GENERAL TORQUES	Nm	lbf ft	kgf m
Turbine Housing Bolts	20–25	15–18	2.0–2.5
Turbocharger to Manifold	41–47	30–35	4.1–4.7
Oil Feed Tube to Turbocharger (Banjo Bolt)	30–40	22–30	3.0–4.0
Oil Feed Tube to Filter Head Connector	18–20	13–15	1.8–2.0
Connector to Filter Head	54–81	40–60	5.4–8.1
Oil Return Tube bolts from Turbocharger	20–25	15–18	2.0–2.5
Oil Return Tube to Block Connector	60–70	45–50	6.0–7.0
Oil Return Connector to Block	27	20	2.7
Inlet Hose Clamps	1.7–2.3	(15–20 lbs in)	

MANIFOLDS

Inlet Manifold	Aluminium - with Plenum Chamber
Exhaust Manifold	Cast Iron

TORQUE VALUES

TORQUE VALUES - VARIOUS	Nm	lbf ft	Kgf m
Intake Manifold-to-Cylinder Head	35	26	3.5
Exhaust Manifold-to-Cylinder Head	38	28	3.9
Exhaust Pipe-to-Flange	31	23	3.2

ELECTRICAL SYSTEM SPECIFICATIONS

Alternator		12v. 100 amp – with cab 12v. 55 amp – less cab
Regulator		Integral with alternator
Battery		Minimum maintenance type – 12v. 800 cca Dual battery option – with cab
Starting motor		Positive engagement, solenoid operated
Cold starting aid		Thermostart (with electric timer) Block heater optional
Bulb rating and type:	Headlights	60/55W – H4
	Position lights	5W – R5W
	Work lights	55W – H3
	Turn signals	21W – P21W
	Stop/tail lights	21/5W – P21/5W
	Licence plate lights	10W – R19/10

STARTING SYSTEM

	Starter Type **Bosch 3.1 Kw**
Maximum No Load Current Draw at 12.0 volts and 8000 rev/min.	80 amps
Minimum Brush Length	7.00 mm (0.28 in)
Minimum Commutator Diameter	42.5 mm
Maximum Armature Shaft End Play	0.4 mm (0.015 in)

TORQUE SPECIFICATIONS

	lbf.ft	**Nm**
Starting motor to Engine Block Retaining Bolts	25	34
Solenoid Cable nuts	5	7
Starting Motor End Housing Nuts	7	10
Solenoid Retaining Bolts	4	5

CHARGING SYSTEM

	Alternator Type	
	A127-55	A127-1R
Polarity	Negative Ground	
Nominal Voltage	12.0 v	
Maximum Rev/Min.	15,000	18000
Maximum Output	55 Amps	100 Amps
Regulator Controlled Voltage	13.6 - 14.4 v	
Rotor Field Winding Resistance	2.9Ω	2.6 Ω
Stator Field Winding Resistance	0.2Ω	0.075 Ω
New Brush Length	20.0 mm	
Minimum Brush Length	5.0 mm	
Brush Spring Pressure	1.3-2.7 N (4.7-9.8 oz)	

TORQUE SPECIFICATIONS

	lbf.ft	Nm
Alternator Through Bolts	4.0	5.5
Pulley Retaining Nut	52.0	70
Rectifier Attaching Screws	3.0	4.0
Regulator and Brushbox Screws	2.0	2.7
Terminal Nuts	2.0	2.7

BATTERY

	Standard
Capacity (Ampere hour at 20 hour rate)	107
Cold Cranking Ampere Rating	800
Voltage	12
Cells	6
Ground Terminal	Negative

HYDRAULIC SYSTEM SPECIFICATIONS

HYDRAULIC PUMP ASSEMBLY WITH VARIABLE DISPLACEMENT CLOSED CENTRE LOAD SENSING (CCLS)

Variable Displacement Closed Centre Load Sensing Swash Plate Pump with Integral Charge and Steering Pumps

Charge Pump

Type	Gear Type Pump
Minimum Output @ 2100 eng rev/min (New Pump)	24 US Galls/min, (20 Imp Galls/min, 90 ltrs/min) @ 90 lbf/in^2 (6.2 bar)
Charge Pressure Filter Dump Valve	Crack open @ 100 lbf/in^2 (6.9 bar) Fully open @ 180 lbf/in^2 (12.4 bar)
Charge Pressure	Minimum 23 lbf/in^2 (1.6 bar) @ 2100 rev/min and variable displacement pump 'On' load Maximum 50 lbf/in^2 (3.4 bar) @ 2100 rev/min and variable displacement pump 'Off' load
Charge Pressure Switch	Close @ 8–12 lbf/in^2 (0.55–0.82 bar) Making charge pressure warning light flash

Variable Displacement Closed Centre Load Sensing Pump

Type	Variable Piston Pump (Swash Plate Controlled)
Minimum Output @ 2100 eng rev/min (New Pump)	20 US Galls/min, (16.6 Imp Galls/min, 76 Ltrs/min) @ 2550 lbf/in^2 (176 bar)
Standby Pressure (Low Pressure Standby)	310–350 lbf/in^2 (21–24 bar)
Maximum System Pressure (High Pressure Standby)	2700–2800 lbf/in^2 (186–193 bar)
Low Pressure Hydraulic Circuit Pressure Regulating Valve	250–280 lbf/in^2 (17–19 bar)
Low Pressure Circuit Safety Valve	Crack open @ 290 lbf/in^2 (20 bar) Fully open @ 415 lbf/in^2 (29 bar)
Low Transmission Oil Pressure Switch (Tractors with 16 x 16 transmission only)	Close @ 210–220 lbf/in^2 (14.5–15.2 bar) making low transmission oil pressure warning light come 'On' Open @ 240–250 lbf/in^2 (16.5–17.2 bar) Making low transmission oil pressure warning light go 'Off'
Low Transmission Oil Pressure Switch (Tractors with 12 x 12 transmission only)	Close @ 80 lbf/in^2 (5.5 bar) Making low transmission oil pressure warning light come 'On' Open @ 120 lbf/in^2 (8.3 bar) Making low transmission oil pressure warning light go 'Off'
High Oil Temperature Switch	Close @ 104–110°C (219–230°F)

Steering Pump

Type	Gear Type Pump
Minimum Output @ 2100 eng rev/min (New Pump)	9.2 US Galls/min (7.7 Imp Galls/min 34.8 Ltrs/min) @ 2600 lbf/in^2 (169 bar)
Maximum Operating Pressure	2600 lbf/in^2 (179 bar)
Blocked Steering Filter Vacuum Switch	Close @ 18 in Hg. making blocked steering filter warning light come 'On' providing oil temperature 42-48°C (107-118°F)
Low Steering Oil Temperature Switch	Close @ 42-48°C (107-118°F)

THREAD SEALANT

New Holland Thread Lock & Seal, Part Number 82995773
Applied to pump driveshaft gear retaining nut.

= Nm
= lbf ft

TORQUES

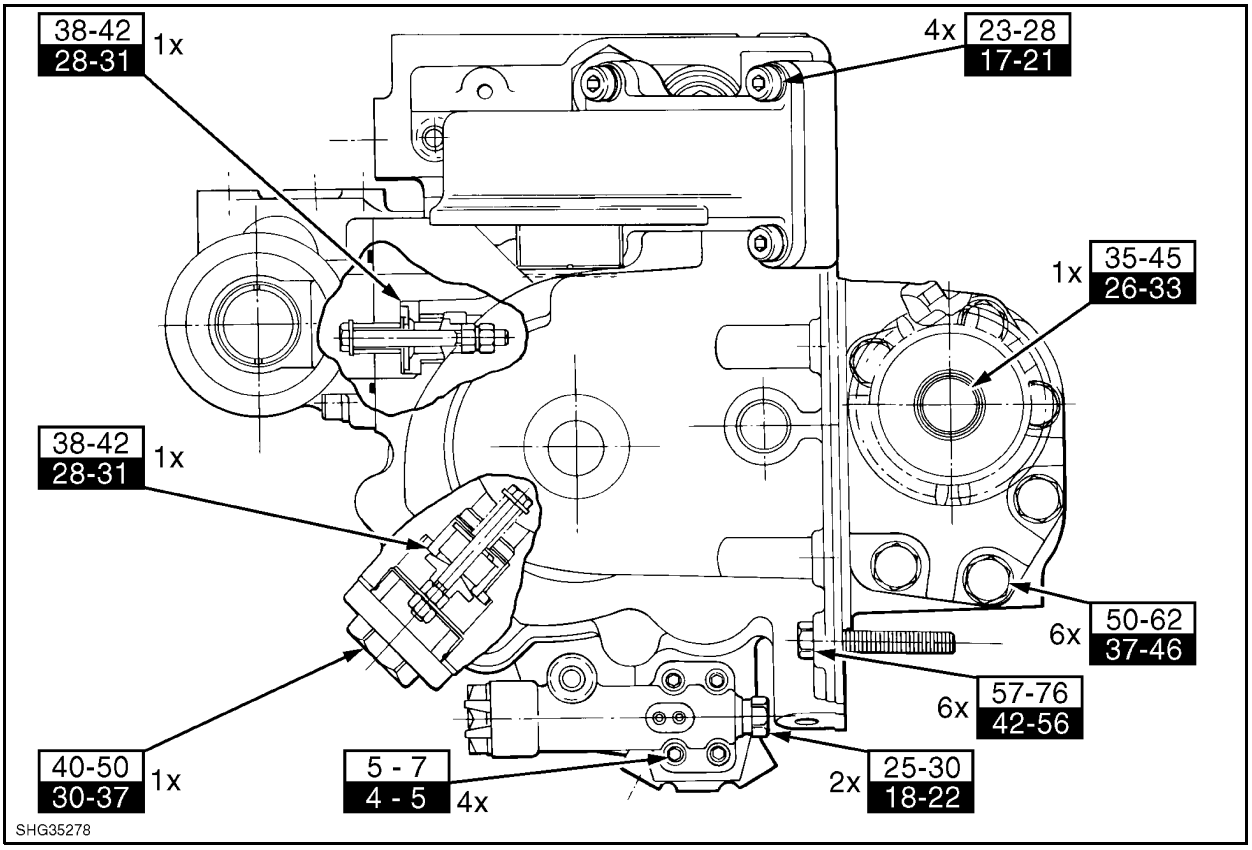

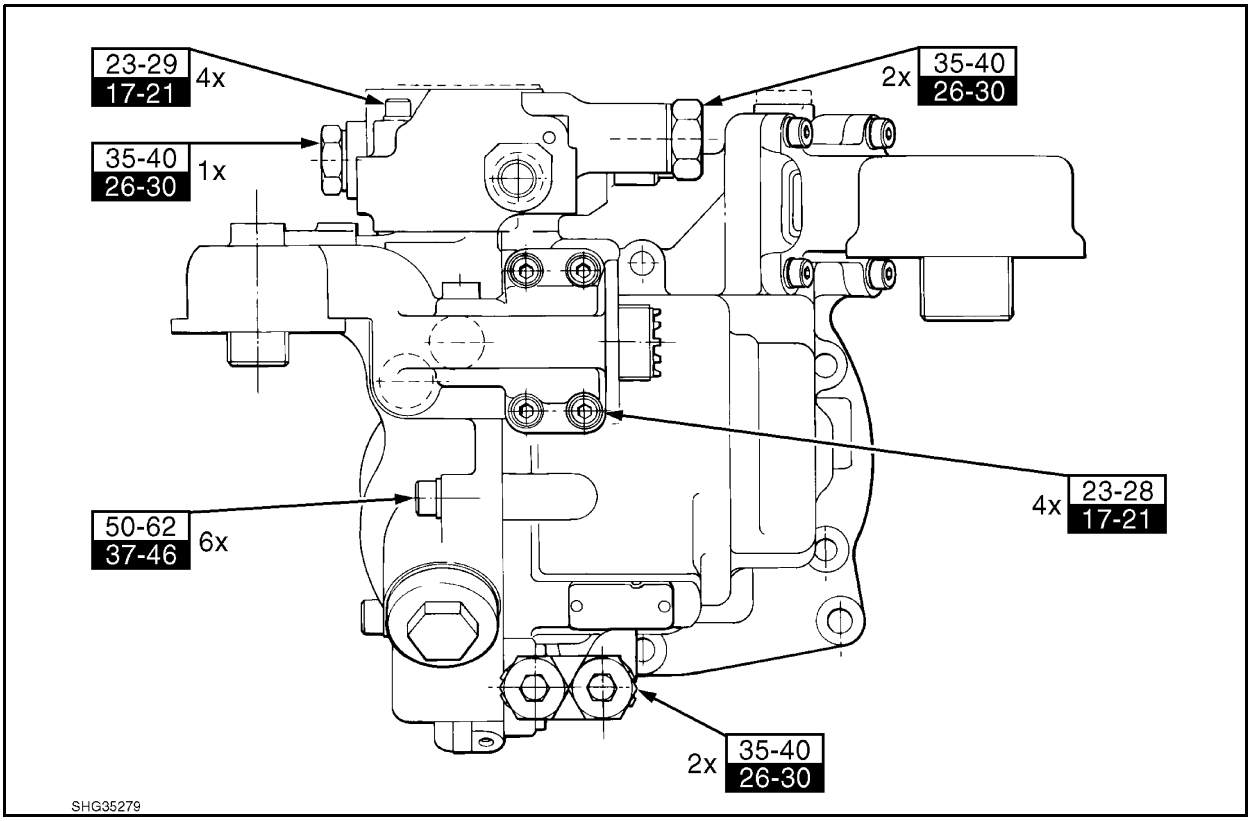

Hydraulic Connections

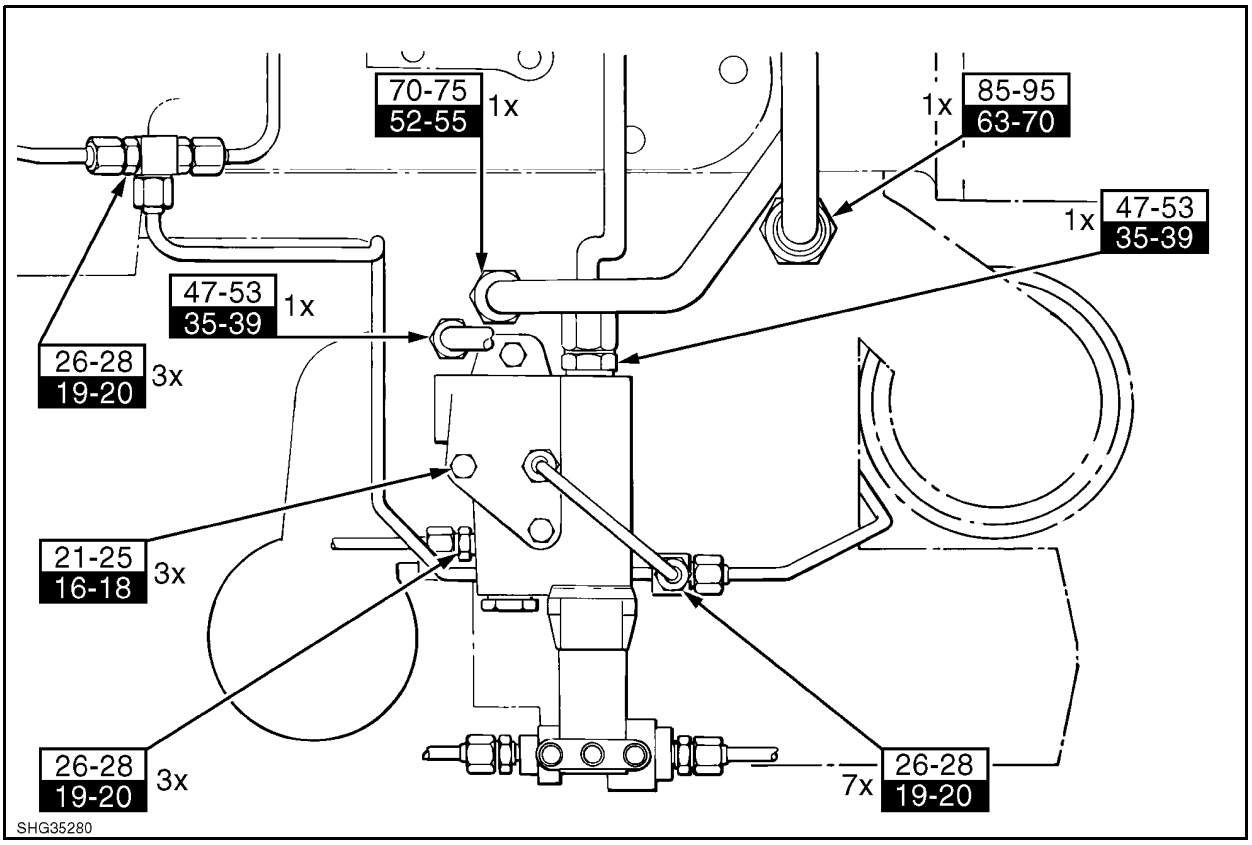

Plan View of Variable Displacement Hydraulic Pump Tube Connections

HYDRAULIC LIFT ASSEMBLY WITH ELECTROLINK™ FOR TRACTORS WITH VARIABLE DISPLACEMENT CLOSED CENTRE LOAD SENSING HYDRAULIC PUMP

MAXIMUM LIFT CAPACITY

New Holland test results to OECD criteria-links horizontal, maximum hydraulic pressure:

		TS90	TS100	TS110
Without Assist Rams				
at link ends	lb	6712	6712	n/a
	kg	3045	3045	n/a
24 in. to rear of link ends	lb	5190	5190	n/a
	kg	2354	2354	n/a
With One Assist Ram				
at link ends	lb	9904	9904	9904
	kg	4492	4492	4492
24 in. to rear of link ends	lb	7484	7484	7484
	kg	3395	3395	3395
With Two Assist Rams				
at link ends	lb	n/a	n/a	13001
	kg	n/a	n/a	5897
24 in. to rear of link ends	lb	n/a	n/a	9957
	kg	n/a	n/a	4516

VALVE SETTINGS

Lift Cylinder Relief Valve 2850-3050 lbf/in^2 (197-210 bar)

GASKET SEALER

New Holland Flexible Gasket Sealant, Part No. 82995770 (50 ml) 82995771 (300 ml)

TORQUES

= **Nm**
= **lbf ft**

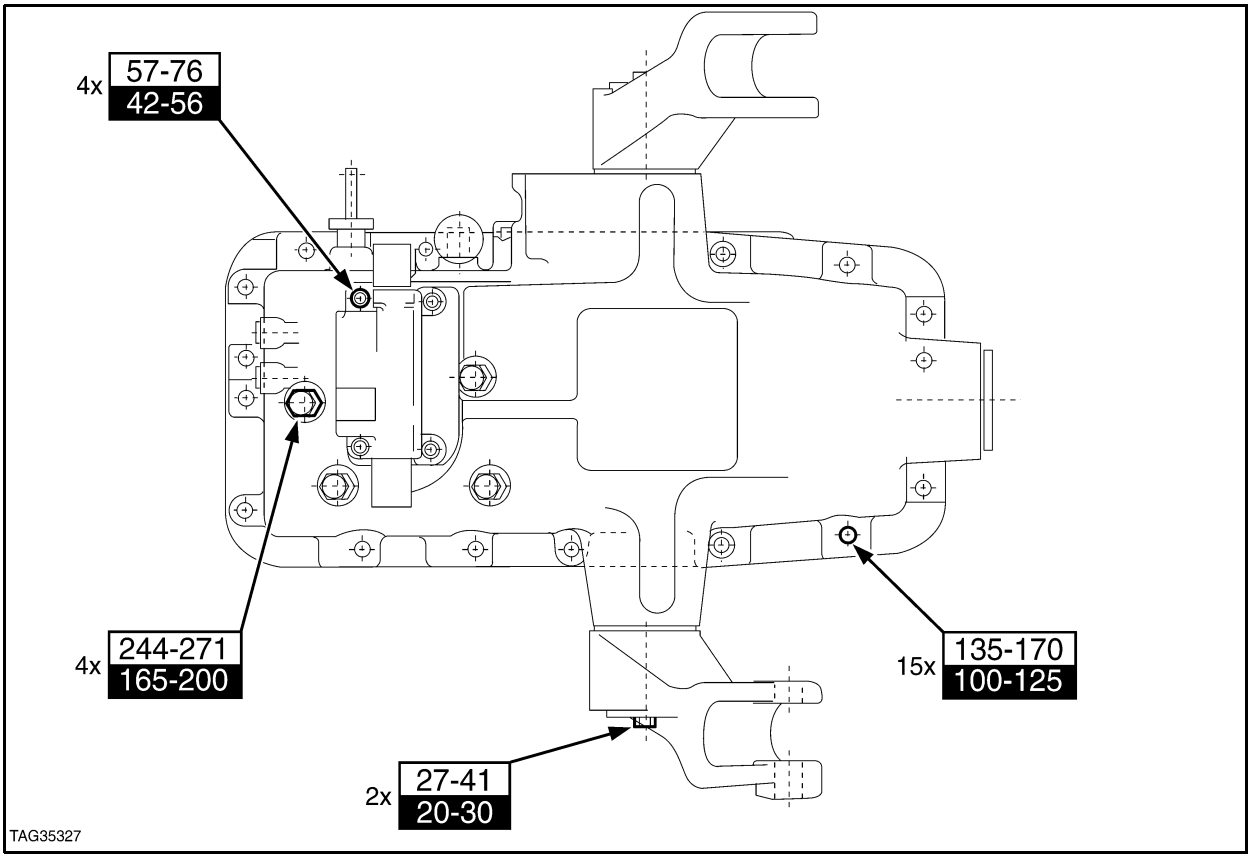

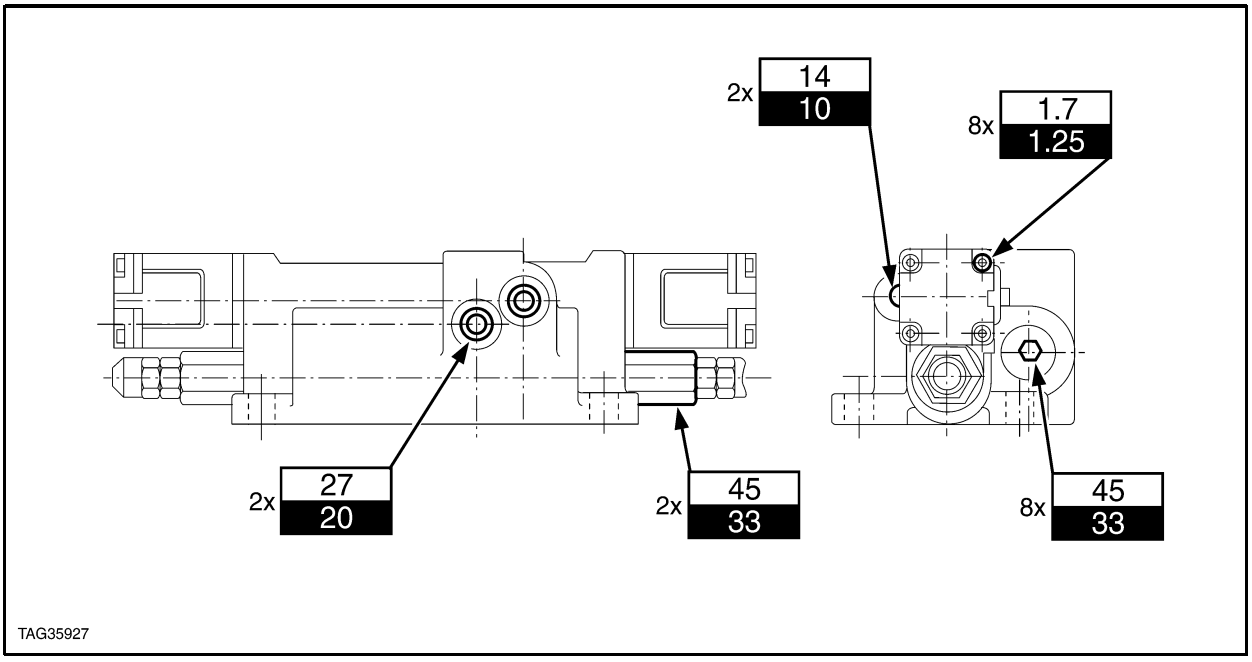

Lift Cylinder Relief Valve Torque 75-90 lbf ft (102-122Nm)

HYDRAULIC LIFT ASSEMBLY WITH TOP LINK SENSING

MAXIMUM LIFT CAPACITY
THREE POINT LINKAGE

Maximum lift capacity – Manufacturers' figures to OECD criteria – links horizontal, maximum hydraulic pressure:

Models with 12 × 12 transmission – without assist rams

		TS90	TS100	TS110
at link ends	kg	2880	2880	n/a
	lb	6350	6350	n/a
24 in. to rear of link ends	kg	2227	2227	n/a
	lb	4910	4910	n/a

Models with 12 × 12 transmission – with one assist ram

at link ends	kg		4250	
	lb		9370	
24 in. to rear of link ends	kg		3211	
	lb		7080	

Models with 12 × 12 transmission – with two assist rams

at link ends	kg	n/a	n/a	5579
	lb	n/a	n/a	12300
24 in. to rear of link ends	kg	n/a	n/a	4273
	lb	n/a	n/a	9420

without assist rams

at link ends	kg	3045	3045	n/a
	lb	6713	6713	n/a
24 in. to rear of link ends	kg	2354	2354	n/a
	lb	5190	5190	n/a

Models with 16 × 16 transmission – with one assist ram

at link ends	kg		4492	
	lb		9904	
24 in. to rear of link ends	kg		3395	
	lb		7484	

Models with 16 × 16 transmission – with two assist rams

at link ends	kg	n/a	n/a	5897
	lb	n/a	n/a	13001
24 in. to rear of link ends	kg	n/a	n/a	4516
	lb	n/a	n/a	9957

ASC SELECTOR VALVE SIZES

Colour	Inches	mm
Green	0.6247–0.6244	15.8674–15.8598
Yellow	0.6244–0.6241	15.8598–15.8521
Blue	0.6241–0.6238	15.8521–15.8445
White	0.6238–0.6235	15.8445–15.8369
Blue/White	0.6235–0.6232	15.8369–15.8293

CONTROL VALVE SIZES

Colour	Inches	mm
Orange	0.5928–0.5927	15.057–15.055
Green	0.5926–0.5925	15.052–15.050
Yellow	0.5923–0.5921	15.044–15.039
Blue	0.5921–0.5919	15.039–15.034
White	0.5919–0.5917	15.034–15.029

CONTROL VALVE BUSHING SIZES

Colour	Inches	mm
Green/White	1.0014–1.0012	25.436–25.430
Orange	1.0012–1.0010	25.430–25.425
Green	1.0010–1.0008	25.425–25.420
Yellow	1.0008–1.0006	25.420–25.415
Blue	1.0006–1.0004	25.415–25.410
White	1.0004–1.0002	25.410–25.405
Blue\White	1.0002–1.0000	25.405–25.400

VALVE SETTINGS

Lift Cylinder Relief Valve	197–210 bar (2850–3050 lbf/in^2)

GASKET SEALER

Gasket Sealer 82995770

TORQUES

= **Nm**

= **lbf ft**

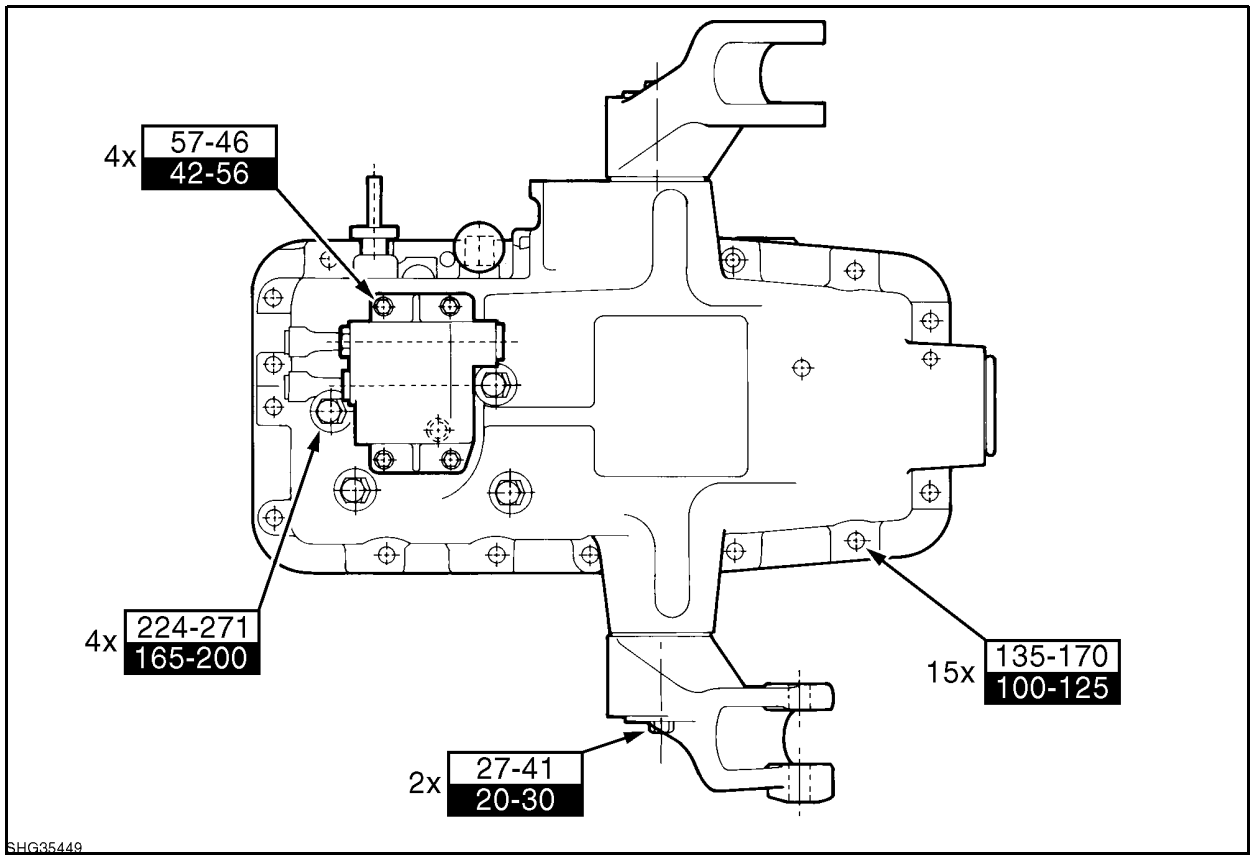

Components	Nm	lbf.ft
Lift Cylinder Relief Valve	102-122	75-90
Selector Support Bolts	57-76	42-56
Selector Body Turning Torque	9-14	7-10
Eccentric Shaft Locknut	20-27	15-20
Unload Valve Plug (CCLS Pump)	23-49	17-35
Yoke Retaining Nut Set Screw	27-34	20-25

FIXED DISPLACEMENT GEAR TYPE PUMPS

Fixed Displacement Gear Type Pump With Integral Steering Pump

Main Hydraulic Lift Pump	
Type	Gear Type Pump
Minimum output @ 2100 engine rev/min @ 2000 lbf/in^2 (165 bar)	
New pump	35 Ltrs/min (7.7 Imp gals/min 9.3 U.S. Gals/min)
Used pump	32 Ltrs/min (7.0 Imp gals/min 8.4 U.S. Gals/min)
Pressure relief valve setting	176-183 bar (2550-2650 lbf/in^2)
Steering Pump	
Type	Gear Type Pump
Minimum output @ 2100 engine rev/min	
New pump	35 Ltrs/min (7.7 Imp gals/mim 9.2 U.S. Gals min)
Used pump	31 Ltrs/min (6.8 Imp gals/min 8.2 U.S. Gals/min)
Steering Motor Relief Valve Setting	
2WD Tractors	138-145 bar (2000-2100 lbf/in^2)
4WD Tractors	166-172 bar (2400-2500 lbf/in^2)

Auxiliary Engine Mounted Fixed Displacement Gear Type Pump

Type	Gear Type Pump
Minimum output @ 2100 engine rev/min @ 165 bar (2400 lbf/in^2)	
New pump	33 Ltrs/min (7.3 Imp gals/min 8 U.S. Gals/min)
Used pump	23 Ltrs/min (5 Imp gals/min 6 U.S. Gals/min)

TORQUES

= **Nm**
= **lbf ft**

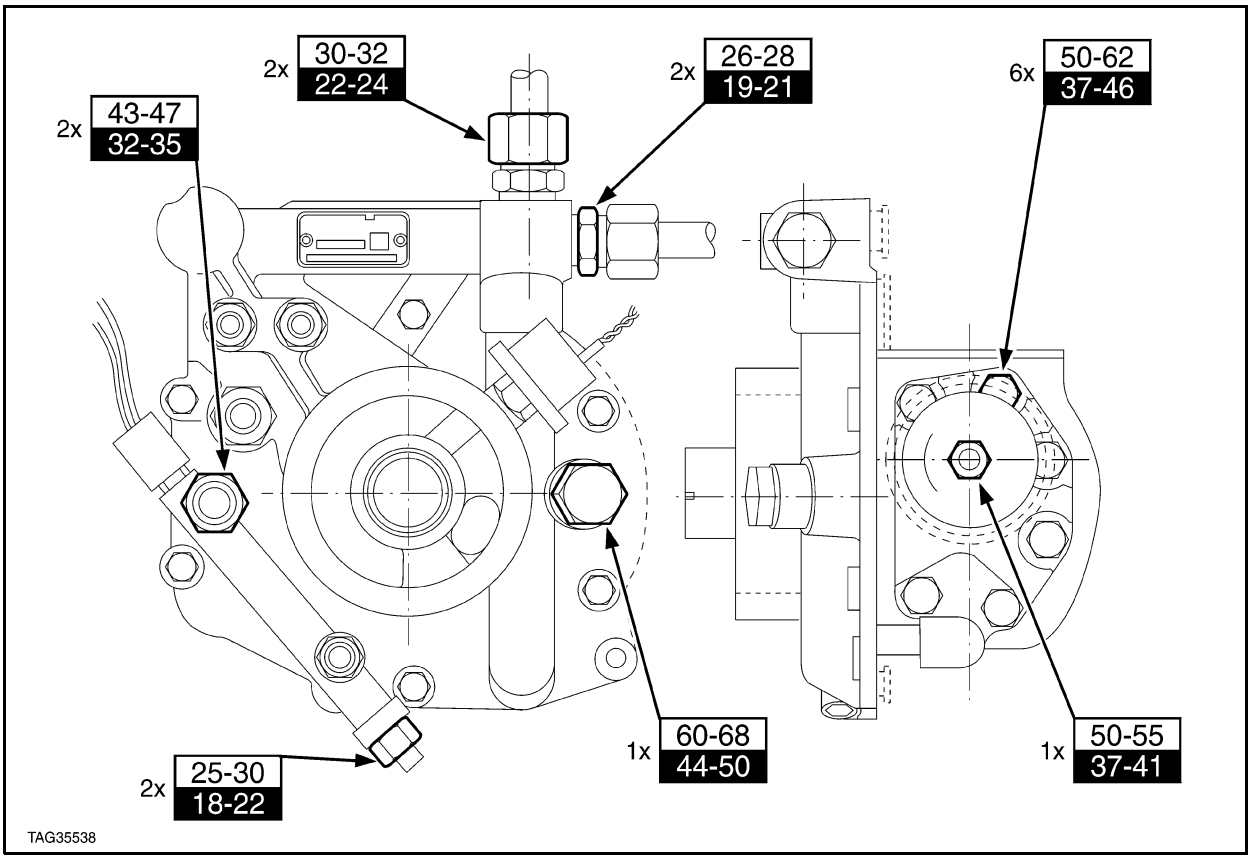

Transmission Mounted Fixed Displacement Tandem Gear Type Pump

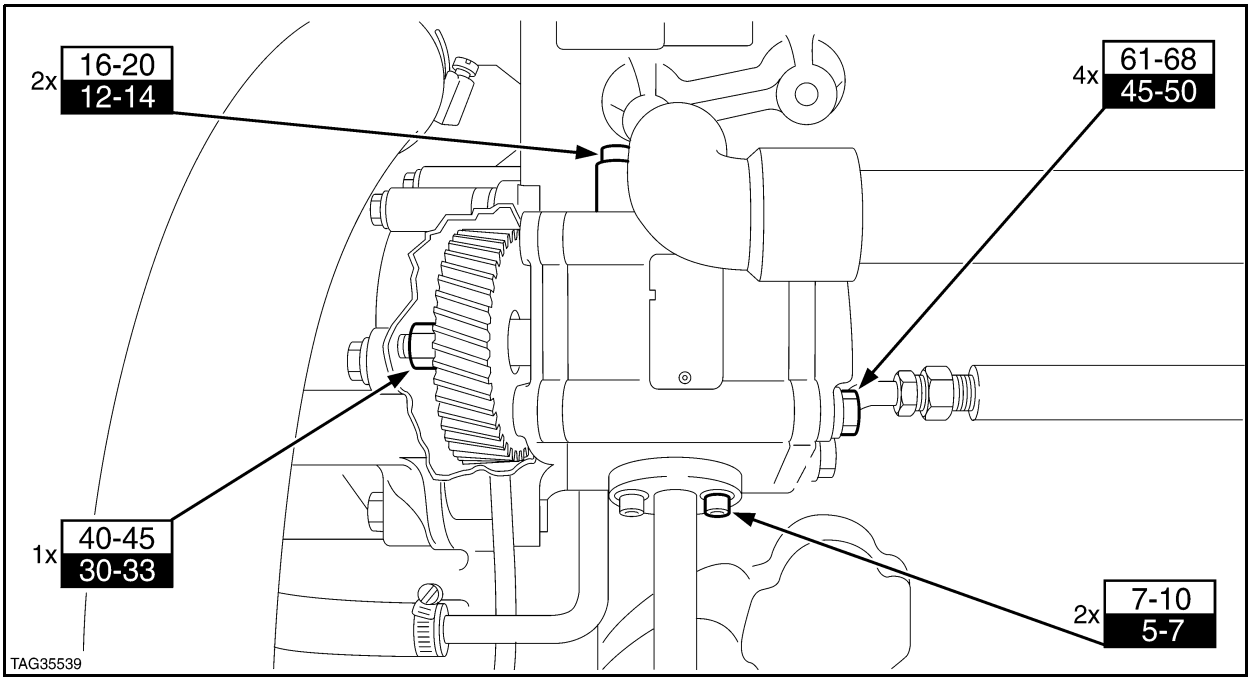

Engine Mounted Fixed Displacement Gear Type Pump

HYDRAULIC TRAILER BRAKES

Maximum Trailer Brake Pressure	1740-2176 lbf/in^2 (120-150 bar)
Brake Reservoir Oil	New Holland Specification Mineral Oil

TORQUES

= Nm
= lbf ft

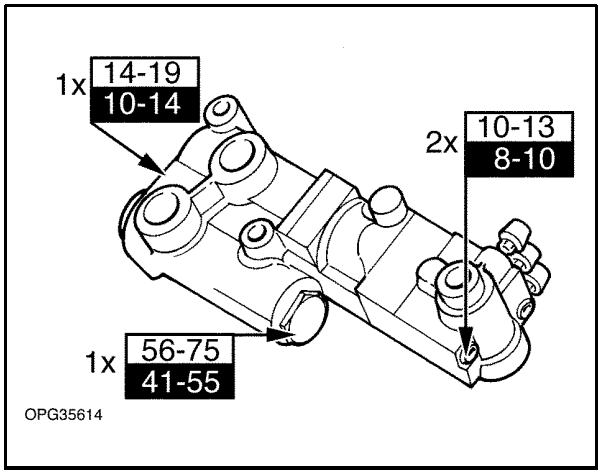

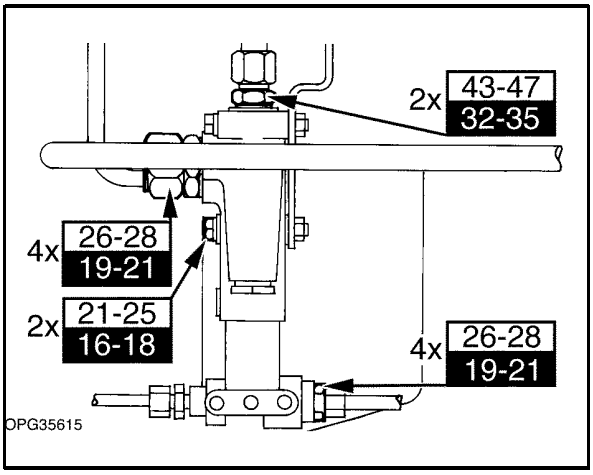

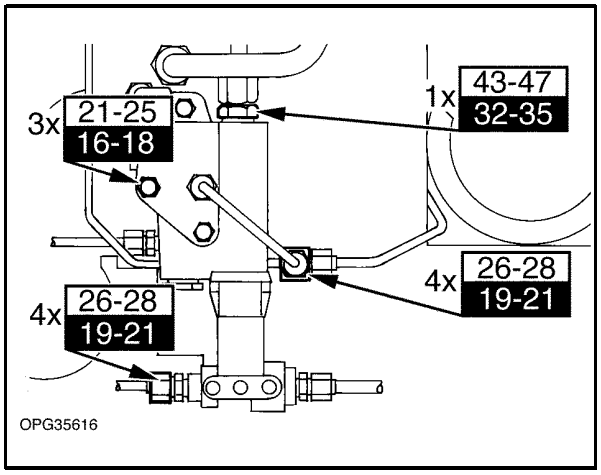

REMOTE CONTROL VALVES

Detent Regulating Valve Pressure 2150-2350 lbf/in^2 (148-162 bar)

TORQUES

Flow Control Valve Plug	20 lbf ft	27 Nm
Detent Shaft Pivot Coupling	5 lbf ft	7 Nm
Detent Housing Retaining Screws	5 lbf ft	7 Nm
Priority Check Valve	5 lbf ft	7 Nm
Valve to Coupler Housing Bolts	11-15 lbf ft	15-20 Nm
Valve to Mounting Bracket Bolts	20-26 lbf ft	27-35 Nm
Remote Valve Coupler to Housing	60 lbf ft	82 Nm

THREAD SEALANT

New Holland Thread Lock and Seal, Part Number 82995773

ASSIST RAMS

MAXIMUM LIFT CAPACITY

Tractors with Fixed Displacement Gear Type Hydraulic Pump @ 2650 lbf/in^2 (183 bar)

Test results to OECD criteria–links horizontal

		TS80, TS85, TS90, TS95, TS100	TS110
Without Assist Rams			
at link ends	lb	6350	n/a
	kg	2880	n/a
24 in. to rear of link ends	lb	4910	n/a
	kg	2227	n/a
With One Assist Ram			
at link ends	lb	9370	9370
	kg	4250	4250
24 in. to rear of link ends	lb	7080	7080
	kg	3211	3211
With Two Assist Rams			
at link ends	lb	n/a	12300
	kg	n/a	5579
24 in. to rear of link ends	lb	n/a	9420
	kg	n/a	4273

Tractors with Fixed Displacement Gear Type Hydraulic Pump @ 2385 lbf/in^2 (164 bar)

Test results to SAE criteria–links horizontal

		TS80, TS85, TS90, TS95, TS100	TS110
Without Assist Rams			
24 in. to rear of link ends	lb	4200	n/a
	kg	1905	n/a
With One Assist Ram			
24 in. to rear of link ends	lb	6210	6210
	kg	2817	2817
With Two Assist Rams			
24 in. to rear of link ends	lb	n/a	8240
	kg	n/a	3728

MAXIMUM LIFT CAPACITY

Tractors with Variable Displacement Closed Centre Load Sensing (CCLS) Hydraulic Pump @ 2800 lbf/in^2 (193 bar)

Test results to OECD criteria–links horizontal

		TS90	TS100	TS110
Without Assist Rams				
at link ends	lb	6712	6712	n/a
	kg	3045	3045	n/a
24 in. to rear of link ends	lb	5190	5190	n/a
	kg	2354	2354	n/a
With One Assist Ram				
at link ends	lb	9904	9904	9904
	kg	4492	4492	4492
24 in. to rear of link ends	lb	7484	7484	7484
	kg	3395	3395	3395
With Two Assist Rams				
at link ends	lb	n/a	n/a	13001
	kg	n/a	n/a	5897
24 in. to rear of link ends	lb	n/a	n/a	9957
	kg	n/a	n/a	4516

Tractors with Variable Displacement Closed Centre Load Sensing (CCLS) Hydraulic Pump @ 2800 lbf/in^2 (193 bar)

Test results to SAE criteria-links horizontal

Without Assist Rams		TS90	TS100	TS110
24 in. to rear of link ends	lb	4439	4439	n/a
	kg	2014	2014	n/a
With One Assist Ram				
24 in. to rear of link ends	lb	6564	6564	n/a
	kg	2978	2978	n/a
With Two Assist Rams				
24 in. to rear of link ends	lb	n/a	n/a	8710
	kg	n/a	n/a	3950

TORQUES

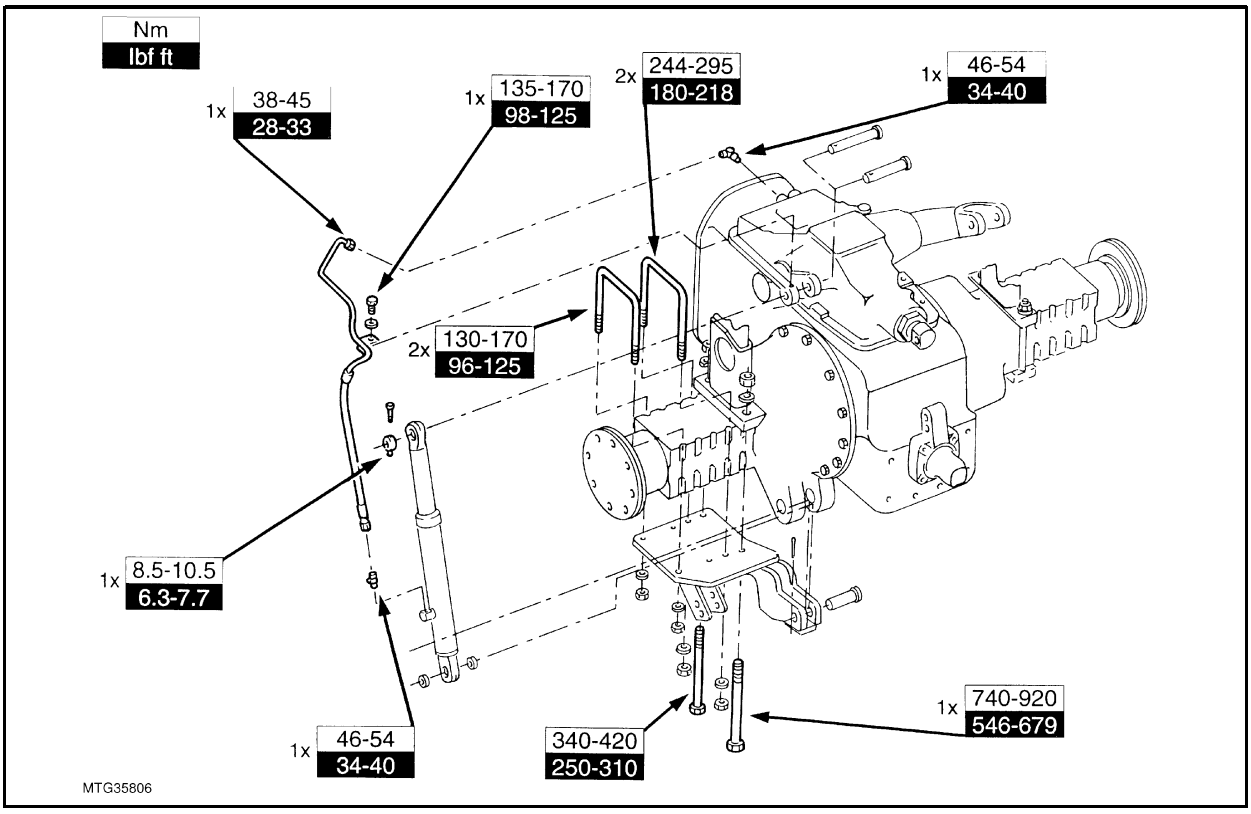

Single Hydraulic Assist Ram and Bracket Installation (With and Less Cab)

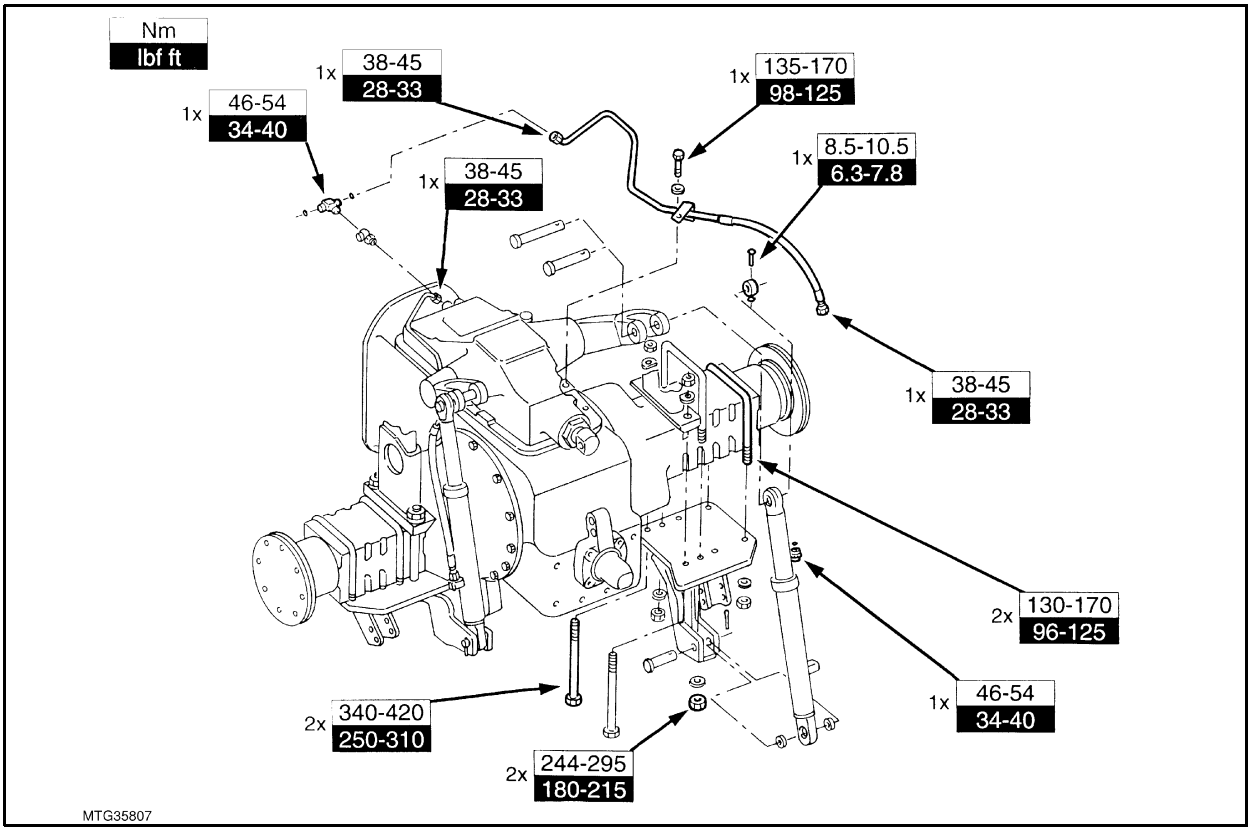

Double Hydraulic Assist Ram and Bracket Installation (With and Less Cab)

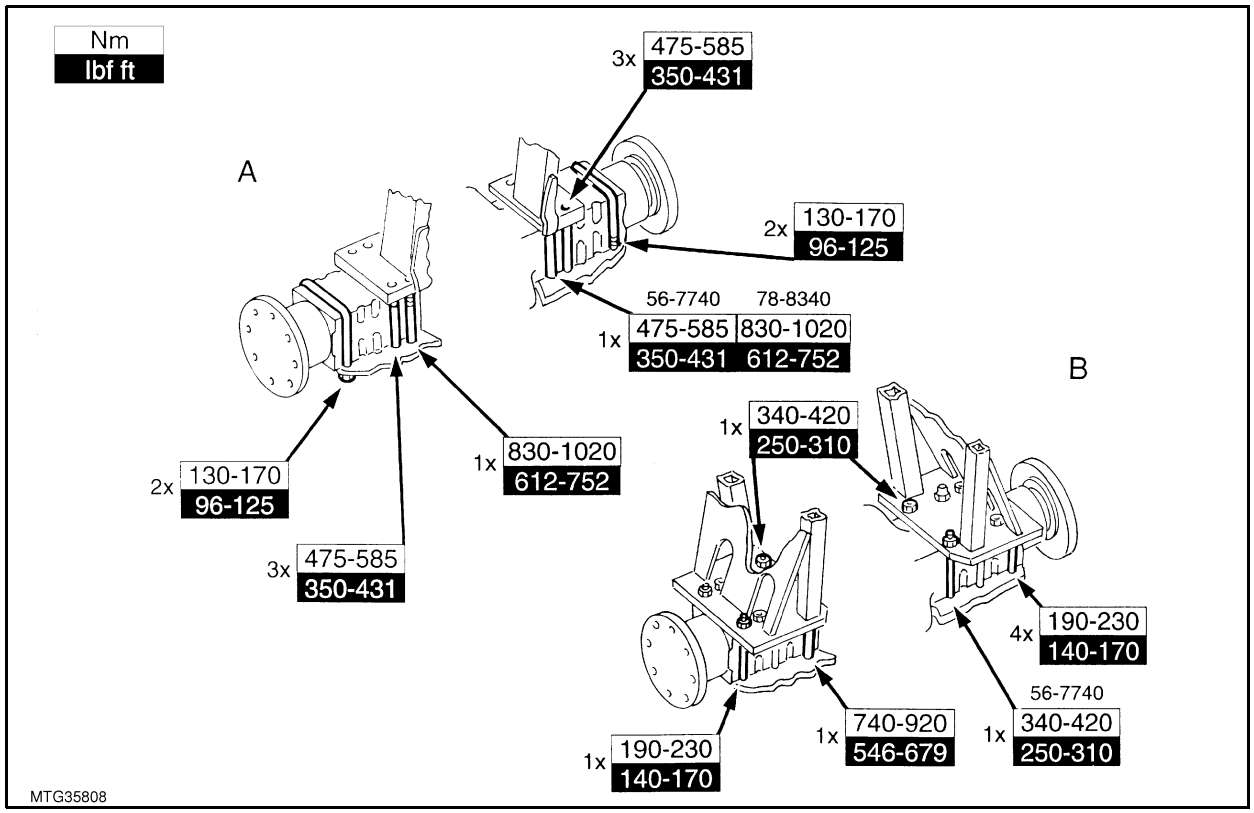

Assist Ram Mounting Bracket
(Two and Four Post Roll Over Protection Frame)

A. Two Post Roll Over Protection Frame

B. Four Post Roll Over Protection Frame

HYDRAULIC LIFT ASSEMBLY WITH ELECTRONIC DRAFT CONTROL FOR TRACTORS WITH FIXED DISPLACEMENT HYDRAULIC PUMP

VALVE SETTINGS

Lift Cylinder Relief Valve	2850–3050 lbf/in^2 (197–210 bar)

GASKET SEALER

New Holland Gasket Sealant Part No.	82995770 (50 ml) 82995771 (300 ml)

ASC CONTROL VALVE SIZES

Colour	Inches	mm
Green	.6247–.6244	15.8674–15.8598
Yellow	.6244–.6241	15.8598–15.8521
Blue	.6241–.6238	15.8521–15.8445
White	.6238–.6235	15.8445–15.8369
Blue/White	.6235–.6232	15.8369–15.8293

TORQUES

= **Nm**

= **lbf ft**

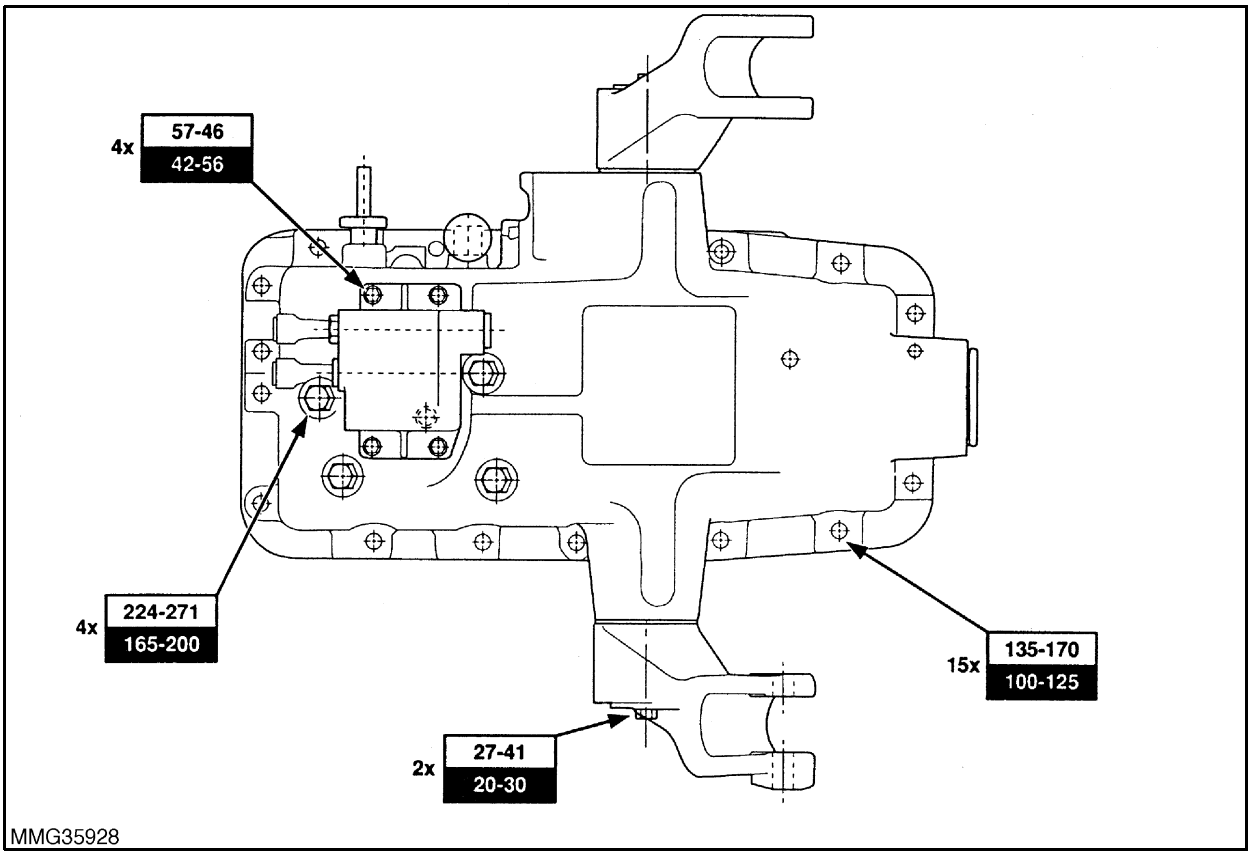

1.

Lift Cylinder Relief Valve Torque 75-90 lbf ft (102-122Nm)

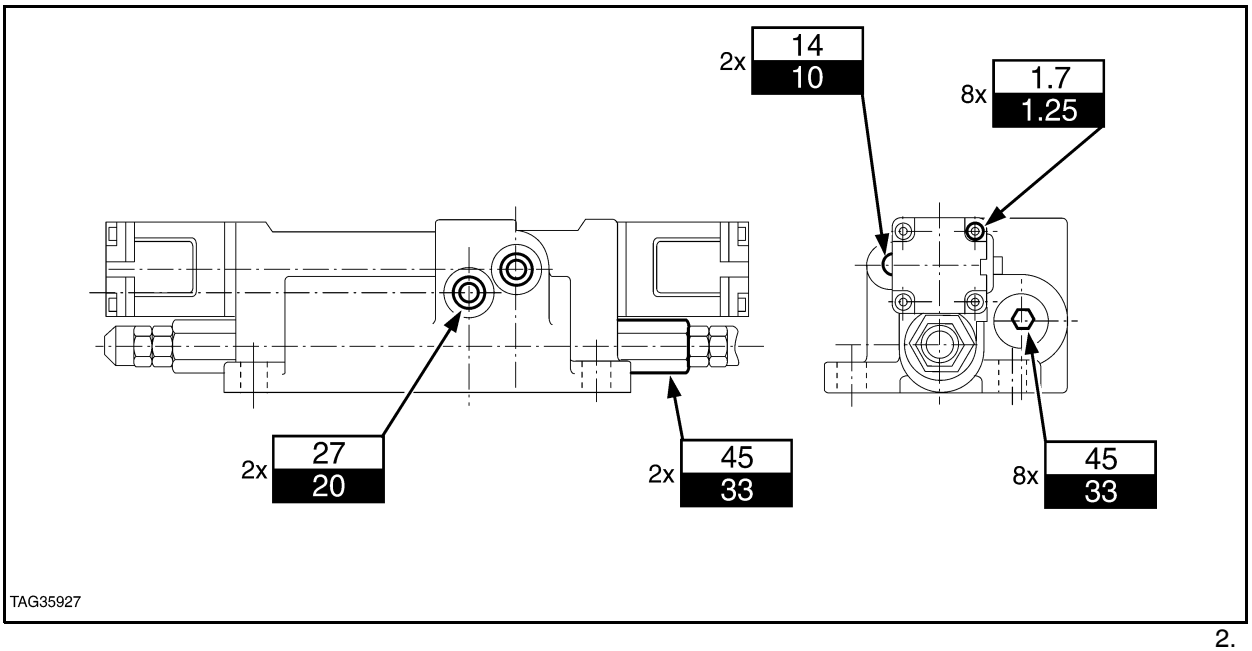

2.

BRAKING SYSTEM SPECIFICATIONS

Service Brake

Component \ Tractor Model	8 × 2 Models	12 × 12 and 16 × 16 models
Brake Type	Wet Brakes	Wet Brakes
Brake Operation	Mechanical + Ball ramp	Hydraulic + Ball ramp
Brake Discs (Per Side)	3	3/4*
Brake Disc Total Friction Area	2452.8 cm^2	2452.8 cm^2/ 3270.4 cm^2

***** 3 per side on 30 kph models with single speed or 2 speed changeable PTO shaft.

Standard Secondary Brake – 12 × 12 and 16 × 16 Models

NOTE: *8 × 2 Models do not have a secondary brake system.*

Brake Type	Twin cable mechanically operated using actuator assemblies of service brake.

Optional Secondary Brake – 12 × 12 and 16 × 16 Models

Brake Type	Single cable, mechanically operated, dry disc, transmission handbrake
Friction Area	195.1 cm^2 (30.24 in^2)
Brake Shaft Bearing Pre-Load: Using gauge , Tool No. T4062 Using a spring balance	 12–16 lb.in (1.4–1.7 Nm) 20–26 lb (9.1–11.8 Kg)
Bearing Retainer To Rear Axle Centre Housing Available Shims:	0.005 in (0.127 mm) & 0.020 in (0.508 mm)

Brake Hydraulics

Master Cylinder Push Rod to Plunger Clearance	0.6 mm (0.024 in) Minimum
Brake Fluid	Mineral brake oil

TIGHTENING TORQUES

Components	lbf. ft	Nm
Master Cylinder Retaining Bolts	17	23
Handbrake Adjuster Locknut	20	27
Handbrake Retaining Bolts	33	45
Transmission Handbrake Housing Retaining Bolts	49	66
Transmission Handbrake Cover Bolts	32	44
Transmission Handbrake Pinion Locknut	75	102
Brake Pedal and operating Lever Pinch Bolts	49	66

STEERING

Hydrostatic Steering System

HYDROSTATIC SYSTEM	2WD	4WD
Pump specifications		
Minimum Pump Output		
Litres/min.	31.0	31.0
Imp.Galls/min	6.8	6.8
U.S. Galls/min.	8.2	8.2
Steering Motor Displacement	125cc/revolution	150cc/revolution
Relief Valve Maximum Differential Pressure Setting	145 Bar 2100 lbf.in^2	170 Bar 2465 lbf.in^2
Absolute Gauge Pressure	153-163 Bar 2220-2370 lbf.in^2	180-190 Bar 2620-2770 lbf.in^2

	TWO WHEEL DRIVE AXLE	
Maximum Steering angle	55°	
Steering Wheel Turns (Lock to Lock)	3.4	
Cylinder	Double Acting Balanced	
	Short Wheel Base	Long Wheel Base
Turning Radius with Brakes	3.27 m	3.53 m
Turning Radius less Brakes	3.66 m	3.88 m

Toe-out	0-13 mm	0-13 mm
	FOUR WHEEL DRIVE AXLE	
Maximum Steering angle	55°	
Steering Wheel Turns (Lock to Lock)	4.7	
Cylinder	2 off Double acting Unbalanced	
Turning Radius with Brakes (4WD disengaged)	3.45	
Turning Radius less Brakes (4WD disengaged)	4.04	
Toe-In	13mm	

TIGHTENING TORQUES

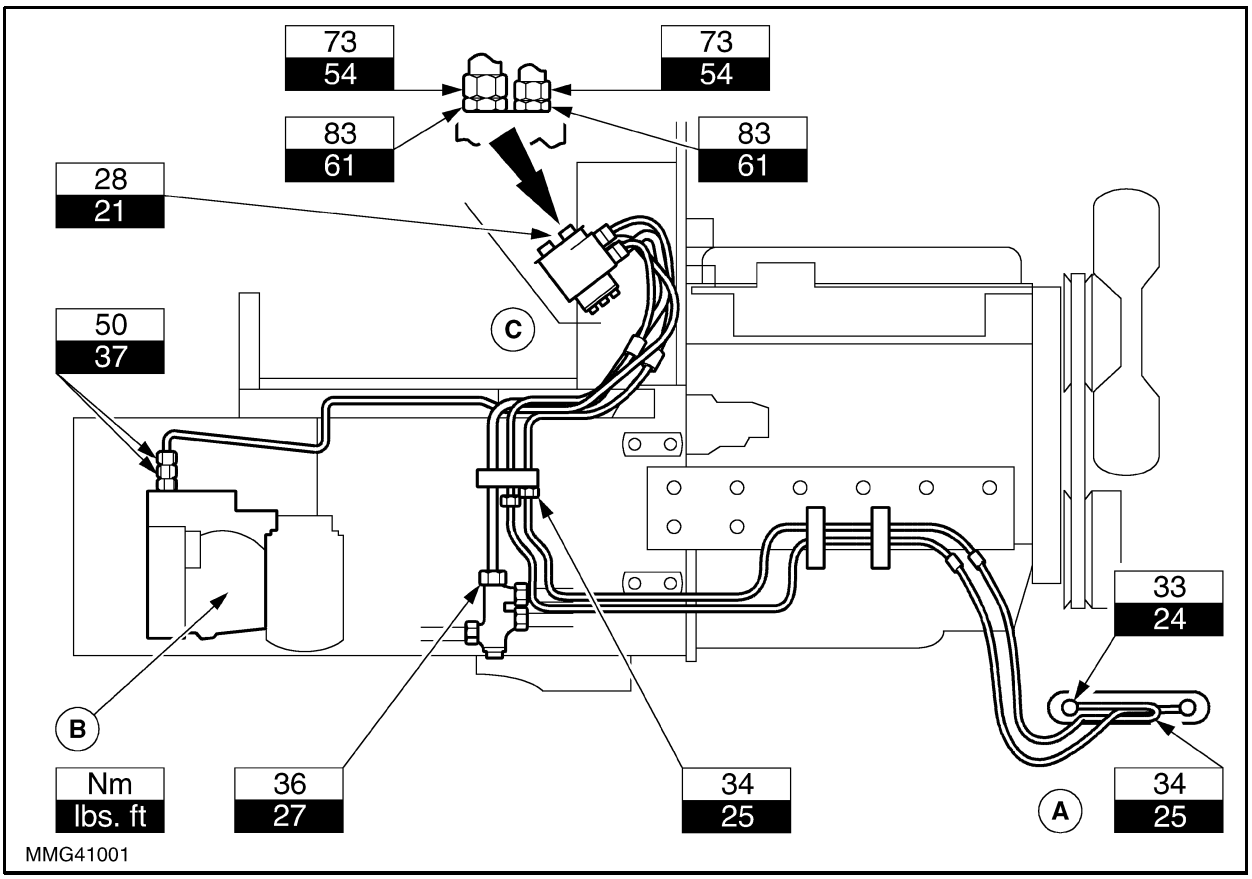

A. Steering Cylinder
B. Variable Displacement/Tandem Gear Pump
C. Steering Motor

3.

Steering General	Nm	Lbf.ft.
Steering Wheel Retaining Nut	23.0	17.0
Front Wheel Nut 2WD	133.0	98.0
Front Wheel Nut 4WD	475.0	350.0
Motor End Cover	23.0	17.0
Cylinder Ball-joint to Extension	43.0	32.0
Cylinder Ball-joint to Axle	176.0	130.0
Cylinder Ball-joint Clamps	43.0	32.0
Cylinder Ball-joint Nuts	176.0	130.0
Cylinder Extension Tube to Cylinder	271.0	200.0
Column to Frame Bolt	23.0	17.0
Cylinder, Tube End Pin Retaining Bolt (4WD)	23.0	17.0

CLUTCHES SPECIFICATIONS

SPECIFICATIONS

Components	
Disc Assembly Type	13in (330 mm) Single Disc Dry Plate
Material	Organic Non Asbestos
Pressure Plate Assembly Type	Belleville (diaphragm) Spring (Self Adjusting - No Maintenance)
Release Bearing Type	Mechanically Operated with 8x2 (16x4) Transmissions Hydraulically Operated with 12x12 Transmission
Clutch Pedal Free Play Adjustment - (Mechanically Operated Clutch Only)	1.1 - 1.6 in (28 - 41 mm)
Transmission Input Shaft Lubricant	Lithium and molybdenum disulphide grease GR75MD
Hydraulic Clutch oil	(NH 160 A)
Master Cylinder Push Rod to Plunger Clearance	0.6 mm (0.024 in) Minimum

TIGHTENING TORQUES

Components	**lbf.ft**	**Nm**
Clutch Cover to Flywheel Bolts	26	35
Clutch Pedal Operating Rod Turnbuckle Locknut	25	34
P.T.O. Drive Plate Bolts	95	129
Cross shaft Release Bearing fork Retaining Bolt	35	47
Hydraulic Slave Cylinder Retaining Bolts	18	25
Master Cylinder Retaining Bolts	17	23
Hydraulic Tube Connections	16	22

TRANSMISSION SYSTEMS

16 × 16 Electroshift Transmsission

Transmission Type	16 forward and 16 reverse speeds using straight cut gears, four multi-plate wet powershift clutches, one forward reverse friction plate synchroniser and one main range friction cone synchroniser
Control System	Electro-hydraulic with electronic management System
Clutch Hydraulic Operating Pressure	18-20 bar (260-290 lbf.in^2) supplied from the CCLS Hydraulic Piston Pump
Hydraulic Control Valve	
Type	Separate Casting, multi spool with internal cast-in galleries
Control	By electrically operated solenoid coils signalled by electronic management System
Hydraulic Accumulator	
Type	Diaphragm type, nitrogen charged with 0.7 litre hydraulic oil capacity
Charge Pressure	10 bar (145 lbf.in^2)
Multi-Plate Wet Clutches	
Type	Constant running, pressure lubricated, pressure applied, spring released
C1 and C2 clutches	
Number of Friction Plates	4 in each clutch
Number of Steel Plates	4 in each clutch
C3 and C4 clutches	
Number of Friction Plates	8 in each clutch
Number of Steel Plates	8 in each clutch
Number of Belleville Washers	4 pairs in each clutch
Belleville washer stack height	24 mm
Pressure Lubrication	Maximum 7 bar (100 lbf.in^2) supplied by the steering gear pump

Lubricant Capacity Transmission/Rear Axle	U.S. Gallons 16.0 Imp. Gallons 13.3 Litres 60.6	
Lubricant	134 D (NH 410 B)	
Lubricant operating temperature	65°C (150°F)	
Output Shaft Component End Float	0.004-0.012 in.	(0.10-0.30 mm)
Output Shaft 'D' Shaped Shim Washer Sizes	0.079-0.080 in. 0.085-0.086 in. 0.091-0.092 in. 0.097-0.098 in. 0.102-0.104 in.	(2.00-2.04 mm) (2.15-2.19 mm) (2.30-2.34 mm) (2.45-2.49 mm) (2.60-2.64 mm)

C3 Clutch Output Shaft to Transmission Rear Buckle Up Face:

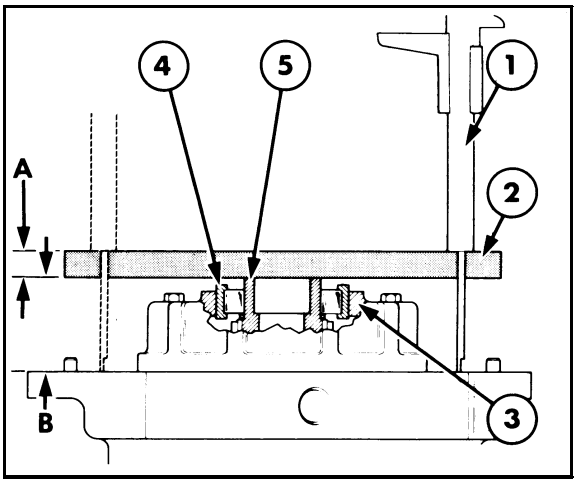

Calculated Distance 'B' (mm)	Washer Thickness Required (mm)
58.82-59.15	6.20-6.25
59.16-59.40	5.95-6.00
59.41-59.65	5.70-5.75
59.66-59.90	5.45-5.50
59.91-60.17	5.20-5.25
60.18-60.52	4.85-4.90

Synchroniser Wear Check

Main Synchroniser

Minimum Gap Between Friction and Outer Cone	0.032 in	0.8 mm

High-Low Range Synchroniser

Minimum Gap Between	0.060 in	1.50 mm
Clutch 3 and 4 Piston Travel	0.10-0.12 in	2.50-3.05 mm
Clutch 3 and 4 Separator Plate Thickness	0.089-0.091 in 0.109-0.114 in	2.26-2.3 mm 2.76-2.8 mm

Forward/Reverse and Range Synchroniser

Support Shaft Running Clearance	0.016-0.024 in	0.40-0.60 mm

Forward/Reverse Synchroniser Support Front

Bearing Retainer Plate Shim Sizes:	F0NN-7Z478-AA	0.040 in.	1.00 mm
	F0NN-7Z478-BA	0.012 in.	0.30 mm
	F0NN-7Z478-CA	0.004 in.	0.10 mm
	F0NN-7Z478-DA	0.002 in.	0.05 mm

Gear Ratios
30 Km/hr Transmission

Gear	Forward Range	Transmission Ratio
1	Creeper	43.20
2	Creeper	35.36
3	Creeper	28.91
4	Creeper	23.66
5	Creeper	18.30
6	Creeper	14.98
7	Creeper	12.24
8	Creeper	10.02
1	L	8.51
2	L	6.97
3	L	5.69
4	L	4.66
5	L	3.30
6	L	2.95
7	L	2.41
8	L	1.97
1	H	2.74
2	H	2.25
3	H	1.84
4	H	1.50
5	H	1.16
6	H	0.95
7	H	0.78
8	H	0.64

	Reverse	
1	Creeper	43.60
2	Creeper	35.68
3	Creeper	29.17
4	Creeper	23.88
5	Creeper	18.46
6	Creeper	15.11
7	Creeper	12.36
8	Creeper	10.11
1	L	8.59
2	L	7.03
3	L	5.75
4	L	4.70
5	L	3.64
6	L	2.98
7	L	2.43
8	L	1.99
1	H	2.77
2	H	2.27
3	H	1.85
4	H	1.52
5	H	1.17
6	H	0.96
7	H	0.78
8	H	0.64

40 Km/hr Transmission

Gear	Forward Range	Transmission Ratio
1	Creeper	43.42
2	Creeper	35.36
3	Creeper	29.06
4	Creeper	23.66
5	Creeper	18.39
6	Creeper	14.98
7	Creeper	12.31
8	Creeper	10.02
1	L	8.55
2	L	6.97
3	L	5.72
4	L	4.66
5	L	3.62
6	L	2.95
7	L	2.42
8	L	1.97
1	H	2.08
2	H	1.69
3	H	1.39
4	H	1.13
5	H	0.88
6	H	0.72
7	H	0.59
8	H	0.48

	Reverse	
1	Creeper	43.82
2	Creeper	35.68
3	Creeper	29.32
4	Creeper	23.88
5	Creeper	18.55
6	Creeper	15.11
7	Creeper	12.42
8	Creeper	10.11
1	L	8.63
2	L	7.03
3	L	5.78
4	L	4.70
5	L	3.66
6	L	2.98
7	L	2.45
8	L	1.99
1	H	2.10
2	H	1.71
3	H	1.40
4	H	1.14
5	H	0.89
6	H	0.72
7	H	0.59
8	H	0.48

Low Pressure Hydraulic Circuit Pressure Regulating Valve	18-20 bar (260-290 lbf/in^2)
Low Transmission Oil Pressure Switch	Closes @ 210-220 lbf/in^2 (14.5-15.2 bar) transmission oil pressure warning light comes 'On' Opens @ 240-250 lbf/in^2 (16.5-17.2 bar) transmission oil pressure warning light goes 'Off'
Maximum Operating Pressure	Low pressure circuit safety valve operates 400-415 lbf/in^2 (27.6-28.6 bars)

THREAD SEALANT

Thread Sealant	New Holland Thread Seal 82995768	
Gasket Sealant	New Holland Flexible Sealant	82995770 (50 ml) 82995771 (300 ml)

Tightening Torque Values

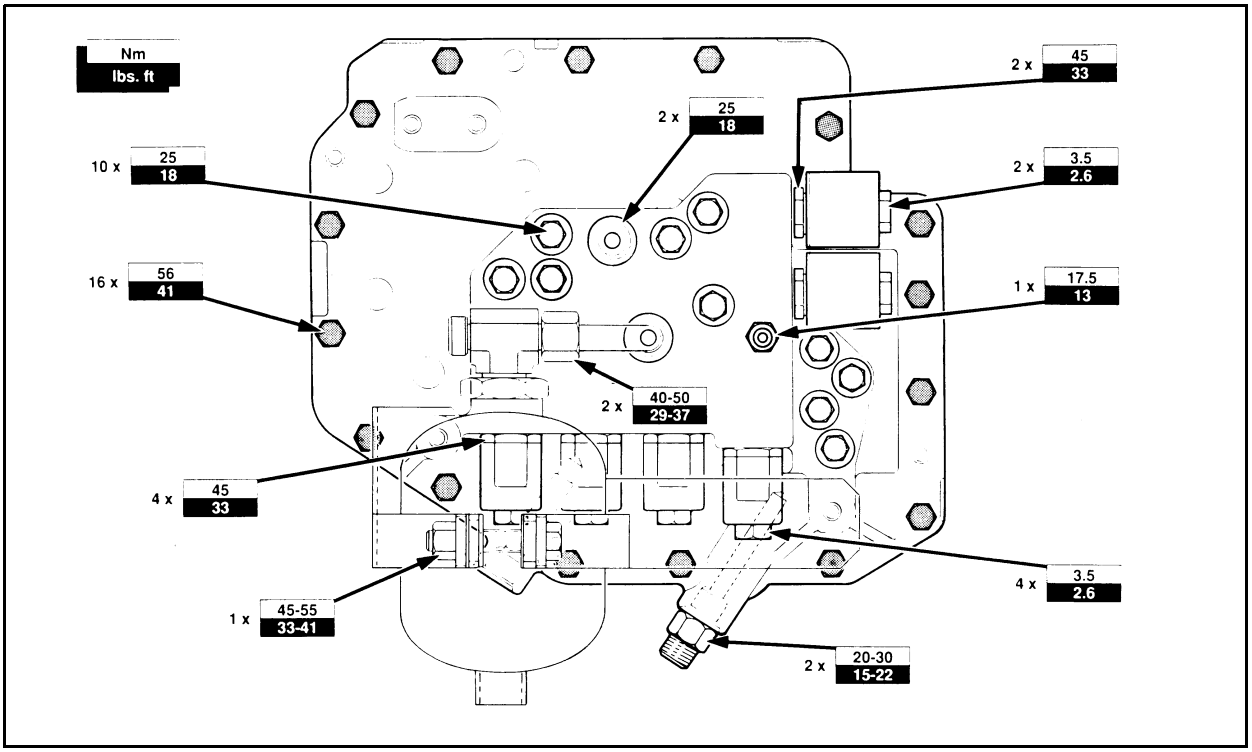

Side Cover (External View)

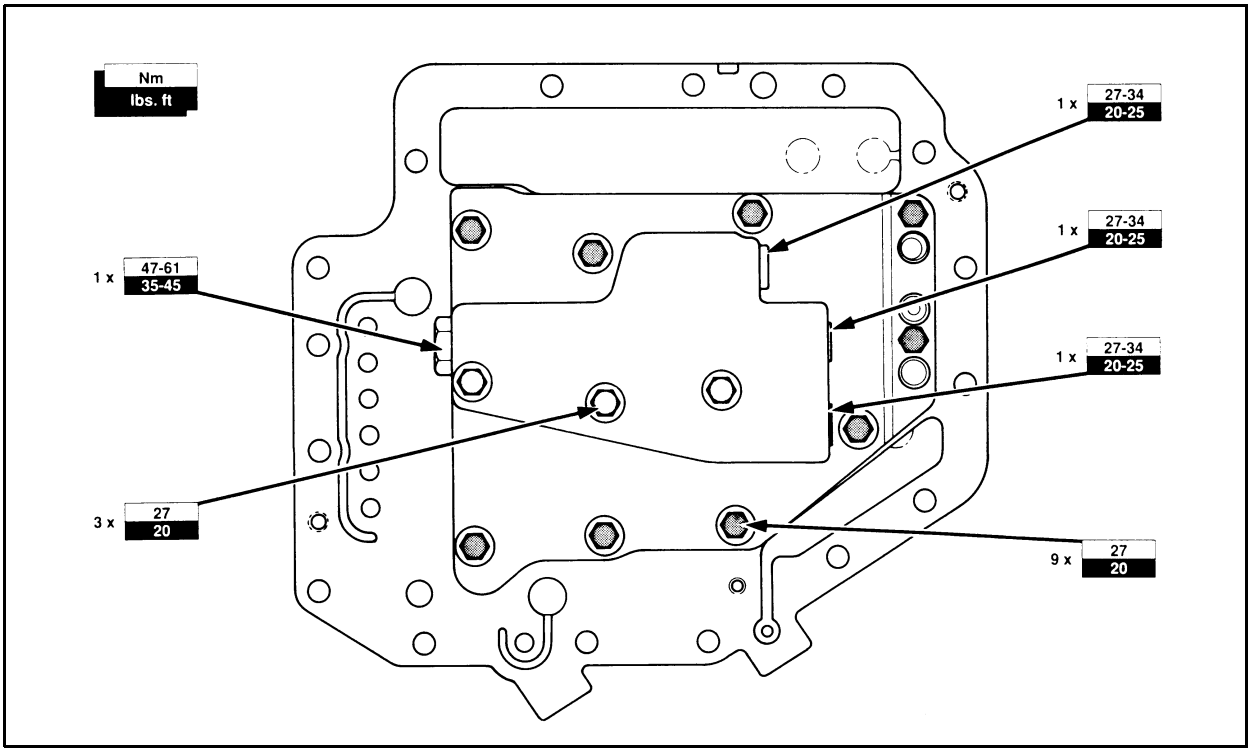

Side Cover (Internal View)

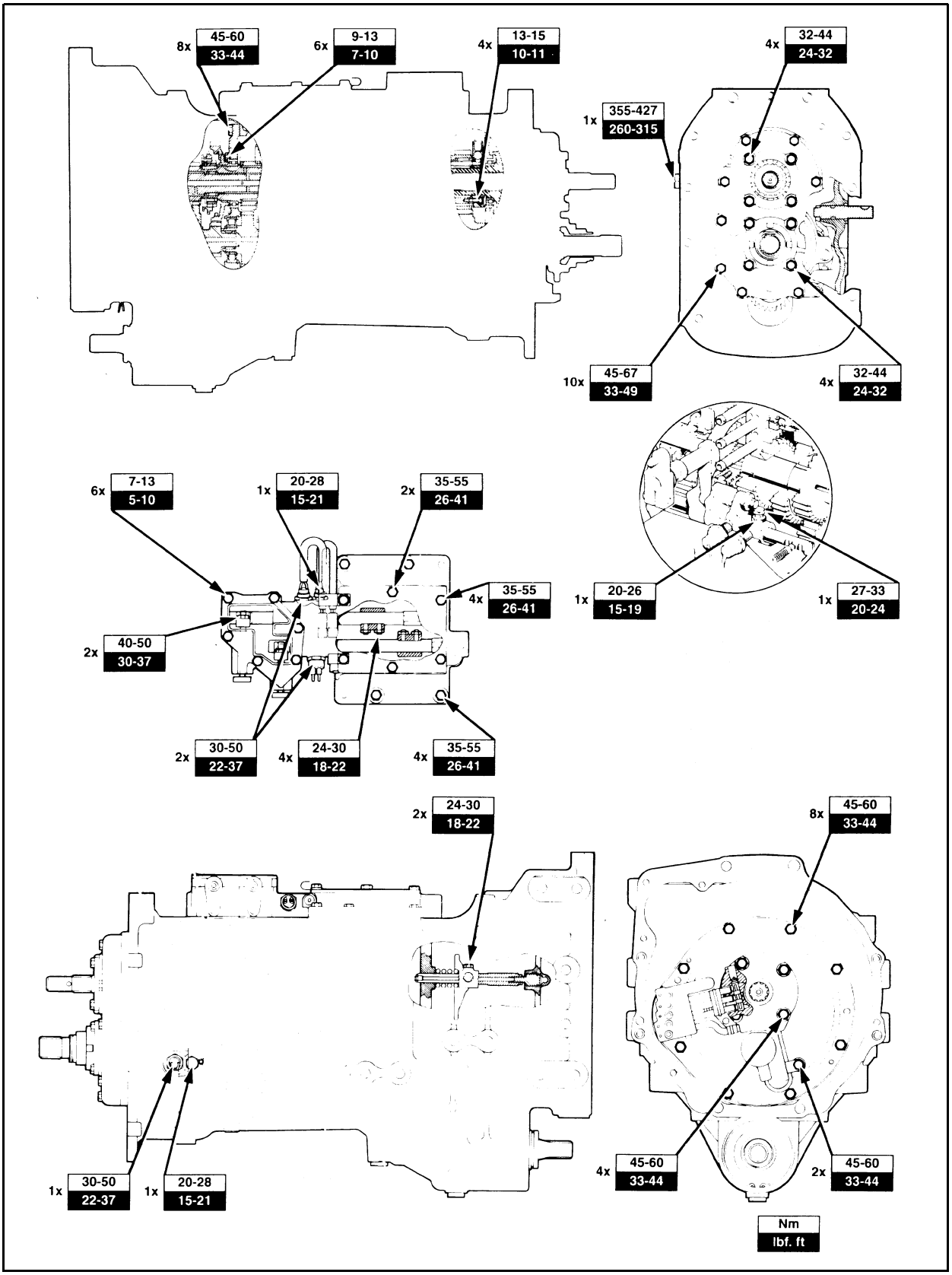
8x 45-60 33-44
6x 9-13 7-10
4x 13-15 10-11
4x 32-44 24-32
1x 355-427 260-315
10x 45-67 33-49
4x 32-44 24-32
6x 7-13 5-10
1x 20-28 15-21
2x 35-55 26-41
4x 35-55 26-41
2x 40-50 30-37
2x 30-50 22-37
4x 24-30 18-22
4x 35-55 26-41
1x 20-26 15-19
1x 27-33 20-24
2x 24-30 18-22
8x 45-60 33-44
1x 30-50 22-37
1x 20-28 15-21
4x 45-60 33-44
2x 45-60 33-44
Nm
lbf. ft

12 x 12 TRANSMISSION

Specifications

Lubricant Capacity Transmission/Rear Axle	U.S. Gallons 15 Imp.Gallons 12.5 Litres 56.8
Lubricant	Ambra Multi-G
Gasket Sealant	New Holland Flexible Gasket Sealant Part Numbers, 82995770 (50 ml) 82995771 (300 ml)
Output Shaft End Float	0.001 - 0.003 in (0.0254 - 0.0762 mm)
Shims Available for Output shaft End Bearing Retainer	0.003 in (0.0762 mm) 0.005 in (0.1270 mm) 0.012 in (0.3048 mm) 0.030 in (0.7620 mm)

Gear Ratios 30 Km/hr Transmission			Gear Ratios 40 Km/hr Transmission	
F1	9.61		F1	9.61
F2	6.61		F2	6.56
F3	4.87		F3	4.59
F4	3.16		F4	3.16
F5	4.24		F5	3.83
F6	2.92		F6	2.61
F7	2.15		F7	1.83
F8	1.39		F8	1.26
F9	1.93		F9	1.58
F10	1.32		F10	1.08
F11	0.97		F11	0.76
F12	0.63		F12	0.52
R1	9.37		R1	9.37
R2	6.44		R2	6.40
R3	4.75		R3	4.48
R4	3.08		R4	3.08
R5	4.14		R5	3.73
R6	2.84		R6	2.55
R7	2.09		R7	1.78
R8	1.36		R8	1.23
R9	1.88		R9	1.54
R10	1.29		R10	1.05
R11	0.95		R11	0.74
R12	0.62		R12	0.51

Tightening Torque Values

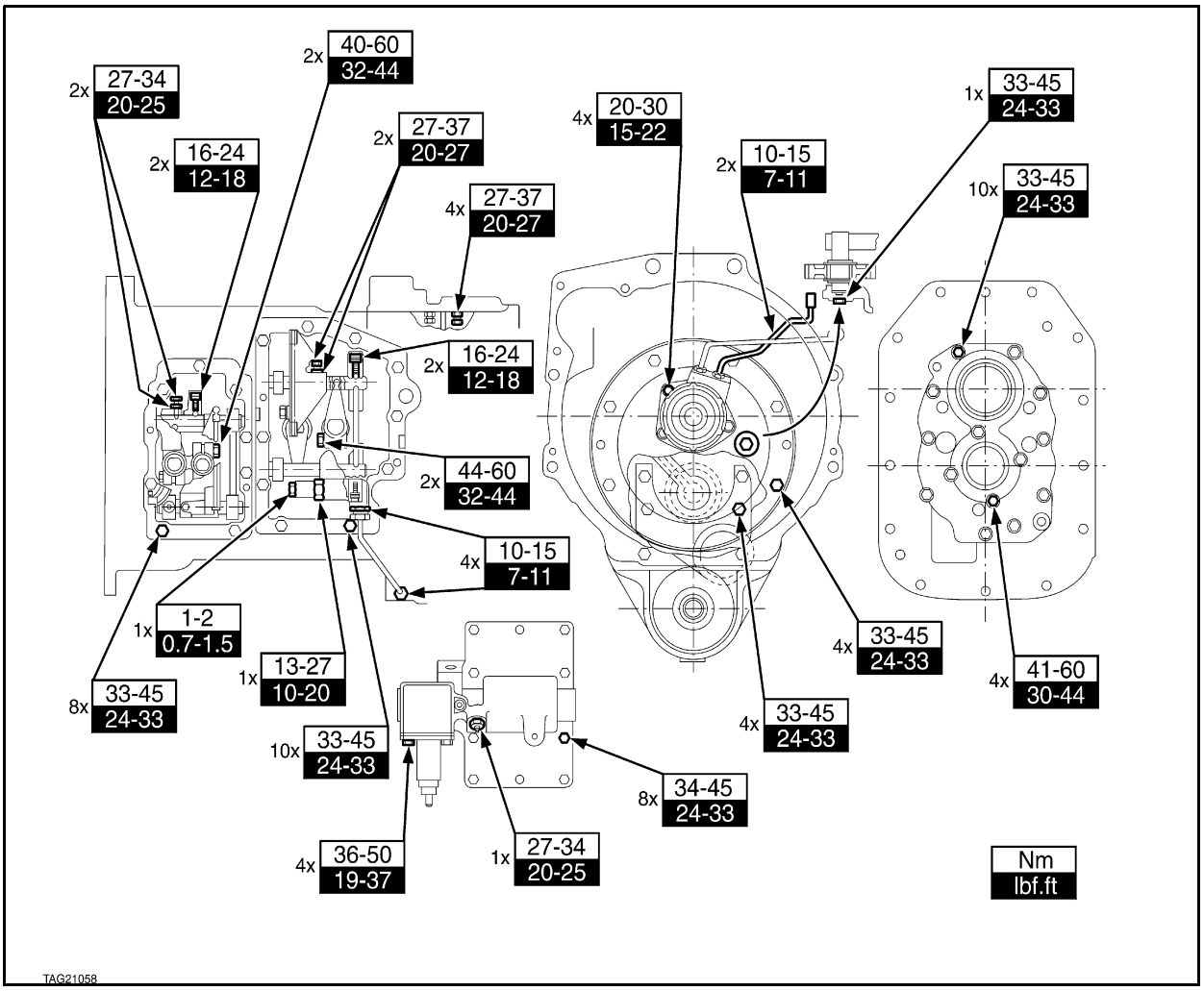

8 × 2 TRANSMISSION

SPECIFICATIONS

Output Shaft End float	0.0015 - 0.0034 (0.038 - 0.086 mm)
Output Shaft End Float Shims Available	0.003 in (0.076 mm) 0.005 in (0.127 mm) 0.012 in (0.305 mm)
Oil Capacity	Common With Rear Axle
Imp. gallons	14.5
U.S. gallons	17.4
Litres	66.0
Transmission/Rear Axle Oil Specification	134 D

Ground Speed Charts

The charts on the two following pages show the ground speeds in MPH and km/h. The charts are for tractors fitted with Dual Power and creeper gears. If your tractor does not have either of these features, then the lines on the chart that are preceded by 'C' or 'Power' should be ignored. The road speeds in the charts relate to tractors with 16.9 - 34 rear tyres. If the rear tyres of your tractor are of a different size, then **multiply** each of the ground speeds shown in the printed charts by the following conversion factors:

Rear tyre size	Conversion factor
13.6 - 36 13.6 - 38	0.960 0.993
16.9 - 30 16.9 - 38	0.933 1.067
18.4 - 26 18.4 - 30 18.4 - 34 18.4 - 38	0.899 0.966 1.033 1.101
20.8 - 38	1.148

Ground Speeds in Miles per Hour (16.9 – 34 Rear Tyres) 8 × 2 and 16 × 4 Transmissions							
Main Shift Lever	Range Lever	Dual Power	Miles per hour Engine Speed (rev/min)				Trans Gear Ratio
			1500	1900	2100	2200	
1	C	Power	0.16	0.20	0.23	0.24	67.08
1	C	Direct	0.21	0.27	0.30	0.31	52.18
2	C	Power	0.20	0.26	0.29	0.30	53.75
2	C	Direct	0.26	0.33	0.37	0.38	41.81
3	C	Power	0.36	0.46	0.50	0.53	30.63
3	C	Direct	0.46	0.59	0.65	0.68	23.82
4	C	Power	0.48	0.61	0.68	0.71	22.50
4	C	Direct	0.63	0.80	0.88	0.92	17.50
1	L	Power	0.93	1.18	1.31	1.37	11.74
1	L	Direct	1.20	1.52	1.69	1.76	9.13
2	L	Power	1.17	1.49	1.64	1.72	9.41
2	L	Direct	1.51	1.91	2.11	2.21	7.32
3	L	Power	2.05	2.60	2.88	3.01	5.36
3	L	Direct	2.64	3.34	3.70	3.87	4.17
4	L	Power	2.80	3.54	3.91	4.10	3.94
4	L	Direct	3.59	4.55	5.03	5.27	3.06
1	H	Power	3.35	4.25	4.69	4.92	3.29
1	H	Direct	4.30	5.45	6.03	6.31	2.56
2	H	Power	4.18	5.29	5.85	6.13	2.63
2	H	Direct	5.38	6.81	7.53	7.89	2.05
3	H	Power	7.34	9.29	10.27	10.76	1.50
3	H	Direct	9.44	11.95	13.20	13.84	1.17
4	H	Power	9.99	12.65	13.98	14.65	1.10
4	H	Direct	12.84	16.26	17.98	18.83	0.86
R	C	Power	0.31	0.39	0.33	0.45	46.67
R	C	Direct	0.36	0.46	0.42	0.53	36.30
R	L	Power	1.35	1.71	1.89	1.98	8.17
R	L	Direct	1.73	2.19	2.42	2.54	6.35
R	H	Power	4.81	6.10	6.74	7.06	2.29
R	H	Direct	6.19	7.84	8.62	9.08	1.78

Ground Speeds in Kilometers per Hour (16.9 – 34 Rear Tyres) 8 × 2 and 16 × 4 Transmissions							
Main Shift Lever	Range Lever	Dual Power	Kilometers per hour Engine Speed (rev/min)				Trans Gear Ratio
			1500	1900	2100	2200	
1	C	Power	0.27	0.34	0.37	0.39	67.08
1	C	Direct	0.34	0.47	0.48	0.50	52.18
2	C	Power	0.33	0.41	0.46	0.48	53.75
2	C	Direct	0.42	0.54	0.59	0.62	41.81
3	C	Power	0.58	0.73	0.81	0.85	30.63
3	C	Direct	0.74	0.94	1.04	1.09	23.82
4	C	Power	0.78	0.99	1.10	1.15	22.50
4	C	Direct	1.01	1.28	1.42	1.48	17.50
1	L	Power	1.51	1.91	2.11	2.21	11.74
1	L	Direct	1.94	2.45	2.72	2.84	9.13
2	L	Power	1.88	2.38	2.64	2.76	9.41
2	L	Direct	2.42	3.07	3.39	3.55	7.32
3	L	Power	3.31	4.19	4.63	4.85	5.36
3	L	Direct	4.25	5.38	5.95	6.23	4.17
4	L	Power	4.50	5.70	6.30	6.60	3.94
4	L	Direct	5.78	7.32	8.10	8.84	3.06
1	H	Power	5.39	6.83	7.55	7.91	3.29
1	H	Direct	6.93	8.77	9.70	10.16	2.56
2	H	Power	6.73	8.52	9.42	9.87	2.63
2	H	Direct	8.65	10.96	12.11	12.69	2.05
3	H	Power	11.81	14.96	16.63	17.32	1.50
3	H	Direct	15.18	19.23	21.25	22.27	1.17
4	H	Power	16.07	20.36	22.50	23.57	1.10
4	H	Direct	20.67	26.18	28.93	30.31	0.86
R	C	Power	0.38	0.48	0.53	0.56	46.67
R	C	Direct	0.49	0.62	0.68	0.72	36.30
R	L	Power	2.17	2.75	3.04	3.18	8.17
R	L	Direct	2.79	3.53	3.90	4.09	6.35
R	H	Power	7.75	9.81	10.85	11.36	2.29
R	H	Direct	9.96	12.62	13.95	14.61	1.78

TIGHTENING TORQUES

	Lbf.ft	Nm
Clutch Release Bearing Hub Support Bolts	49	67
Clutch Release Fork Bolt	35	47
Front Support Plate Bolts	32	44
Gear Shift Cover Assembly Bolts	41	56
Gear Shift Forks and Connectors (Bolts and Locknuts)	23	31
Output Shaft Retainer Bolts	32	44
Rear Support Plate Bolts	32	44
Reverse Idler Shaft Retaining Bolt	17	24
Start Inhibitor Switch	30	40

16 × 4 DUAL COMMAND TRANSMISSION

SPECIFICATIONS

Planetary Gear Set Free Play	0.004-0.020 in (0.10-0.51 mm)	
Planetary Gear Set Free Play Shims Available	0.013 in. (0.33 mm) 0.032 in. (0.81 mm)	
Planetary Cover to Housing Shimming Gap	0.046-0.060 in. (1.17-1.52 mm)	
Planetary Gear Set Free Play Shimming Chart	Average Planetary cover to Housing Gap 0.001-0.013 in. (0.025-0.33mm) 0.014-0.026in. (0.34-0.66mm) 0.027-0.032in. (0.67-0.81mm) 0.033-0.045in. (0.82-1.14 mm) 0.046-0.0060in. (1.15-1.52mm)	Shim Thickness to be added 0.045in. (1.14mm) 0.032in. (0.81mm) 0.026in. (0.66mm) 0.013in. (0.33mm) None
Dual Command System Pressures	220-260 lbf.in^2 (15.2-17.9 bar)	
Lubrication System Pressure	Run lubrication pressure test, a pressure within the following range should be recorded. 73-123 lbf.in^2 (5.0-8.5 bar)	

TIGHTENING TORQUES

Components	lbf.ft	Nm
Control Valve Spool Plug	28	38
Control Valve Body Retaining Bolts	32	44
Planetary Housing Retaining Bolts	77	105
Planetary Cover Retaining Bolts	35	47
Lubrication Tube Connector	13	17.5
Pressure Line Control Tube Connector	9	12

REDUCTION GEARBOX ASSEMBLY

SPECIFICATIONS

Reduction Ratio	5.7:1
Output Shaft End Float with Reduction Gearbox	0.0015-0.0034 in (0.038-0.086 mm)
Output Shaft Pre-Load with Reduction Gearbox	Pull required to turn the output shaft with string wound around output shaft splines 9.5-16 lbf. (1.0-1.8 N)
Output Shaft Pre-Load Shims Available for Reduction Gearbox	0.004 in. (0.10 mm) 0.006 in. (0.15 mm) 0.020 in. (0.50 mm)

TIGHTENING TORQUES

Components	**lbf.ft**	**Nm**
Rear Support Plate Retaining Bolts	35	47
Output shaft Retainer Socket Head Screws	23	31

DUAL COMMAND TRANSMISSION (24 × 24 DUAL COMMAND)

Control System	Electro-hydraulic with electronic management system	
Clutch Hydraulic Operating Pressure	15-18 bar (220-260 lbf.in^2) at 2100 engine rev/min, supplied from the low pressure side of pump	
Pressure Lubrication	Maximum 7.6 bar (110 lbf.in^2) supplied by the steering gear pump	
Lubricant Capacity Transmission/Rear Axle	U.S. Gallons Imp. Gallons Litres	15.4 12.8 58.5
Lubricant	134 D	
Lubricant operating temperature	65°C (150°F)	
Hydraulic Control Valve		
Type	Separate Casting, with internal cast-in galleries	
Control	By electrically operated solenoid coils signaled by electronic management system	
Multi-Plate Wet Clutches		
Type	Constant running, pressure lubricated, pressure applied, spring released.	
Number of Friction Plates	5 in each clutch	
Number of Steel Plates	5 in each clutch	
Number of Separator Springs	5 in each clutch	

TIGHTENING TORQUES

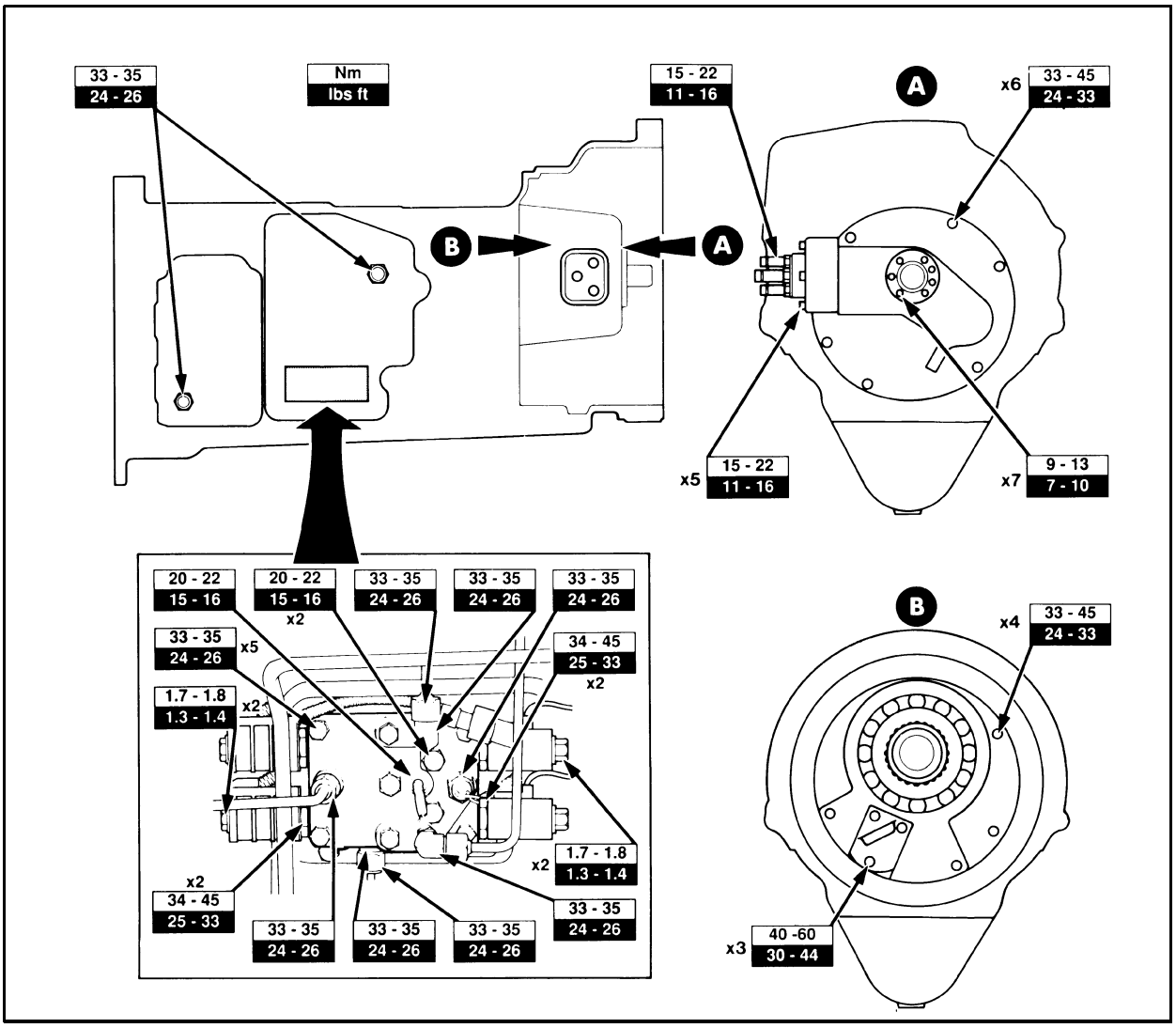

1.

FRONT AXLE

Four Wheel Drive Axle Transfer Box
Tractors With 8 x 2 And 16 x 4 Transmission

SPECIFICATIONS:

Type	Rear axle centralised mounting with electro/hydraulic actuation of dog type non slip clutch. Mechanically engaged/electro–hydraulic release.
Transfer Box Ratio	0.930:1 and 0.907:1
Idler Gear Teeth	44
Driven Gear Teeth	40 and 39
Clearances And Adjustments	
Idler Gear Bearings rolling resistance	0.45 – 1 Kgf (1 – 2.2 lbf) Adjustable by shims
Idler Gear Bearing Shims Available	0.10, 0.25, 0.30, 0.50 mm
Output Shaft Bearings Rolling Resistance	1.9 – 4.5 Kgf (4.2 – 9.9 lbf) Adjustable by shims
Output shaft Bearings Shims Available	0.10, 0.25, 0.30, 0.50 mm
Clutch Spring Free Length	48.0 mm (1.889 in)
Oil Capacity	
Transfer Box Assembly	Lubricated by Rear Axle Oil
Increase in Rear Axle Oil Capacity With Transfer Box Installed	
Litres	1.3
Imp. Pints	2.2
U.S. Pints	2.6
Thread Sealant	New Holland Thread Lock and Seal Part Number 82995773

TIGHTENING TORQUES:

COMPONENTS	lbf. ft	Nm
Transfer Box to Rear Axle Retaining Bolts	49	66
Driveshaft Bolts	42	57
Idler Gear Retaining Bolt	59	80
Oil Drain Plug	59	80
End Plate Bolts	38	51

MECHANICAL REAR WHEEL DRIVE

Rear Axle

SPECIFICATIONS

MODEL (Transmission)	8x2/16x4	12x12/24x24	16x16
Rear Axle General :			
Planetary Gears	3	3	3
Ratios Spiral Bevel	5.286	5.625	
Planetary	4.5	6.0	
Overall	23.786	33.75	
Pitch Dia, Spiral Bevel	13.13 in		
	(333.5mm)		
Axle Shaft Dia	2.7 in		
	(68.58mm)		
Differential Lock	Mechanical	Electro Hydraulic	
Draw Bar Pull lbs	9000	9500	9500
kgms	(4082)	(4309)	(4309)
Load Capacity lbs	12000	13800	13800
kgms	(5443)	(6260)	(6260)
Oil Specification	Ambra Multi-G		
Oil Quantity			
Imp. Gallons	14.5	12.5	13.3
U.S. Gallons	17.4	15.0	16.0
Litres	66.0	56.8	60.6

Axle Shaft Pre-Load

Axle Shaft Rolling Torque using a torque wrench 8.03-20.8 lbf (11.6-28.2 Nm)

Table 1:

RESULTANT FIGURE	SPACER TO BE INSTALLED
0.049-0.052 in (1.24-1.32 mm)	0.045 in (1.14mm)
0.053-0.056 in (1.35-1.42 mm)	0.049 in (1.24 mm)
0.057-0.060 in (1.45-1.52 mm)	0.053 in (1.35 mm)
0.061-0.064 in (1.55-1.63 mm)	0.057 in (1.45 mm)
0.065-0.068 in (1.65-1.73 mm)	0.061 in (1.55 mm)
0.069-0.072 in (1.75-1.83 mm)	0.065 in (1.65 mm)
0.073-0.076 in (1.85-1.93 mm)	0.069 in (1.75 mm)
0.077-0.080 in (1.96-2.03 mm)	0.073 in (1.85 mm)
0.081-0.084 in (2.06-2.13 mm)	0.077 in (1.96 mm)
0.085-0.088 in (2.16-2.24 mm)	0.081 in (2.06 mm)
0.089-0.092 in (2.26-2.34 mm)	0.085 in (2.16 mm)

Differential Bearing Pre-Load

Differential Bearing Rolling Torque using a Spring Pull Gauge: 15-67 lbf. (7-30 Kgf.)

Table 2:

GAP MEASURED	SHIM TO BE INSTALLED
0.024-0.029 in (0.61-0.74 mm)	0.038-0.040 in (0.97-1.02 mm)
0.030-0.035 in (0.76-0.87 mm)	0.044-0.046 in (1.12-1.17 mm)
0.036-0.041 in (0.91-1.04 mm)	0.050-0.052 in (1.27-1.32 mm)
0.042-0.047 in (1.07-1.19 mm)	0.056-0.058 in (1.42-1.47 mm)
0.048-0.053 in (1.22-1.35 mm)	0.062-0.064 in (1.58-1.63 mm)
0.054-0.059 in (1.37-1.50 mm)	0.068-0.070 in (1.73-1.78 mm)
0.060-0.065 (1.50-1.63 mm)	0.074-0.076 in (1.88-1.93 mm)
0.066-0.071 (1.65-1.78 mm)	0.080-0.082 in (2.03-2.08 mm)

Drive Pinion Pre-load (Rolling Torque)

Table 3:

Using Gauge, Tool No. FT.4602 10-17 lb.in (1.1-1.9 Nm)
Using a Spring Pull Gauge 13-23 lbf. (5.9-10.5 Kgf.)

TIGHTENING TORQUES

Components	lbf.ft	Nm
Axle Shaft Housing Retaining Bolts	130-190	176-258
Axle Shaft Retaining Bolt	250-400	339-542
Differential Ring Gear Retaining Nuts	85	115
Differential Case Retaining Bolts	68-92	92-125
Differential Lock Fork Pivot Shaft Retaining Bolts	42-56	57-76
Differential Lock Hanger Retaining Bolts	42-56	57-76
Inner Brake Housing Retaining Bolts	65-89	88-121
Drive Pinion Bearing Retainer Bolts	100-125	136-170
Ring Gear Thrust Block	27-37	37-50
Wheel Nuts (Disc to Hub)		
Manual Adjust Wheels	288	390
Power Adjust Wheels	525	712

FRONT AXLE MECHANICAL TRANSMISSION SPECIFICATIONS

Type	steering, load bearing structure, pivoting at centre	
Bevel gear pair – differential		
Pinion–crown gear ratio	10/32 = 3.2:1	
	mm	**inches**
Backlash between bevel gear pair	0.15–0.20	0.006–0.008
Thickness of pinion position adjustment spacer (7), page 6 and (4), page 8	2.5 up to 3.7 in 0.1 intervals	0.098 up to 0.145 in 0.004 intervals
Thickness of pinion bearing adjustment spacer (8), page 6 and (5), page 8	2.5 up to 4.8 in 0.05 intervals	0.098 up to 0.189 in 0.002 intervals

SPECIFICATION

		mm	inches
Thickness of crown wheel position adjustment spacer (3, page 6)		0.9 - 1 - 1.1 - 1.2 - 1.3 - 1.4 - 1.5 - 1.6 - 1.7 - 1.8 - 1.9 - 2	0.035 - 0.039 - 0.043 - 0.047 - 0.051 - 0.055 - 0.059 - 0.062 - 0.067 - 0.071 - 0.075 - 0.079
Backlash between planet pinions and side gears		0.15	0.006
Thickness of planet pinion thrust washers		1.470 - 1.530	0.058 - 0.060
Thickness of side gear thrust washers		1.4 - 1.5 - 1.6 - 1.7 - 1.8	0.055 - 0.059 - 0.063 - 0.067 - 0.071
Diameter of cross pin for planet pinions:		23.939 - 23.960	0.9425 - 0.9433
Diameter of cross pin bore in planet pinions:		24.040 - 24.061	0.946 - 0.947
Clearance between cross pin and bores		0.080 - 0,122	0.003 - 0.005
Diameter of side gear hubs		43.961 - 44.000	1.731 - 1.732
Diameter of side gear hub bores in differential cage		44.080 - 44,119	1.735 - 1.737
Clearance between side gears and bores		0.080 - 0,158	0.003 - 0.006
Differential lock, self locking			
Single sided friction plate	New Minimum thickness	2.8 2.7	0.110 0.106
Double sided friction plate	New Minimum thickness	1.6 1.45	0.063 0.057
Steel separator plates	New Minimum thickness	1.5 1.4	0.059 0.055
Differential lock, hydraulically operated			
Free length of spring (1, page 6):		~ 87	3.425
Spring length under load of: 1888 - 2035 N (192.5 - 207.5 kg)		~ 48	1.890
Axle shafts and steering knuckles			
Diameter of outer axle shafts (5 and 7) in correspondence with bushes (8):		41,975 - 42,000	1.652 - 1.653
Inside diameter of installed bushes (8), page 7:		42.100 - 42.175([1])	1.657 - 1.660
Clearance between axle shafts and bushes		0.100 - 0.200	0.004 - 0.008
Interference fit between bushes and respective bores		0.064 - 0.129	0.003 - 0.005
Thickness of swivel bearing shims (7), page 7		0.10 - 0.15 - 0.20 - 0.25 - 0.30	0.004 - 0.006 - 0.008 - 0.010 - 0.012
Epicyclic final drives			
Gear ratio:		15:(15:75) = 6:1	
Thickness of driven gear shims (1, page 7)		0.77 - 0.83	0.030 - 0.033

([1]) measurement to be obtained without reaming

(continued overleaf)

SPECIFICATION

(continued)

	mm	inches
Axle pivot		
Endfloat at pivot between axle casing and relative supports	0.3 - 1.1	0.012 - 0.043
Wear limit endfloat	2	0.078
Diameter of front pivot pin	52.652 - 52,671	2.073 - 2.074
Inside diameter of installed front bush	52.720 - 52.790([1])	2.076 -2.078
Clearance between pin and bush	0.049 - 0.138	0.019 - 0.005
Outside diameter of rear bush installed in bevel pinion support	99.020 - 99.050	3.898 - 3.900
Inside diameter of rear bush installed in axle pivot support	99.146 - 99.221([1])	3.903 - 3.906
Clearance between two bushes	0.096 - 0.201	0.004 - 0.008
Thickness of front and rear thrust washer of front axle	4.90 - 5.00	0.139 - 0.197

([1]) measurement to be obtained without reaming

TORQUE SPECIFICATIONS

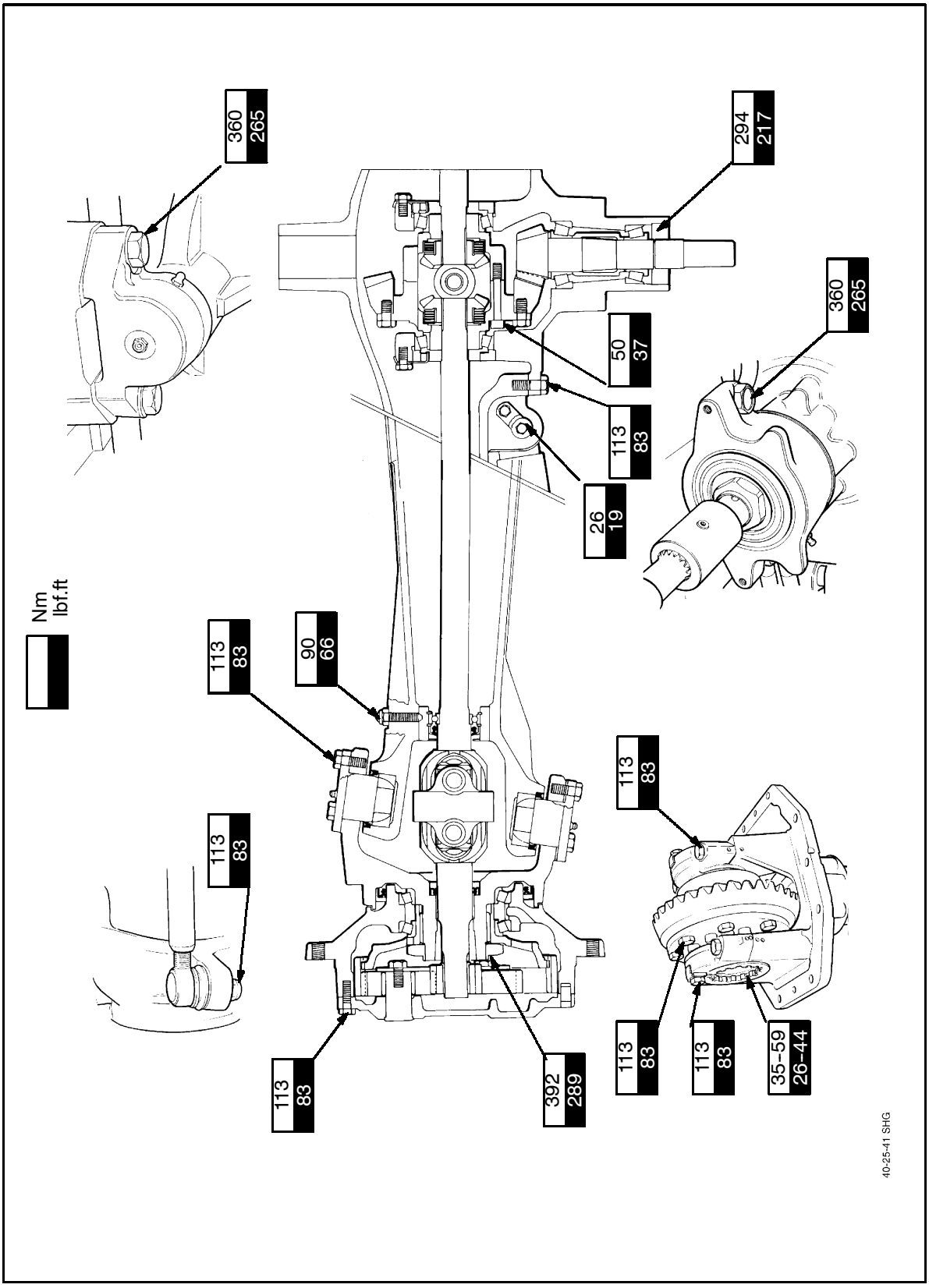

2.

TWO WHEEL DRIVE AXLE

TORQUES

	Nm
	lbf ft

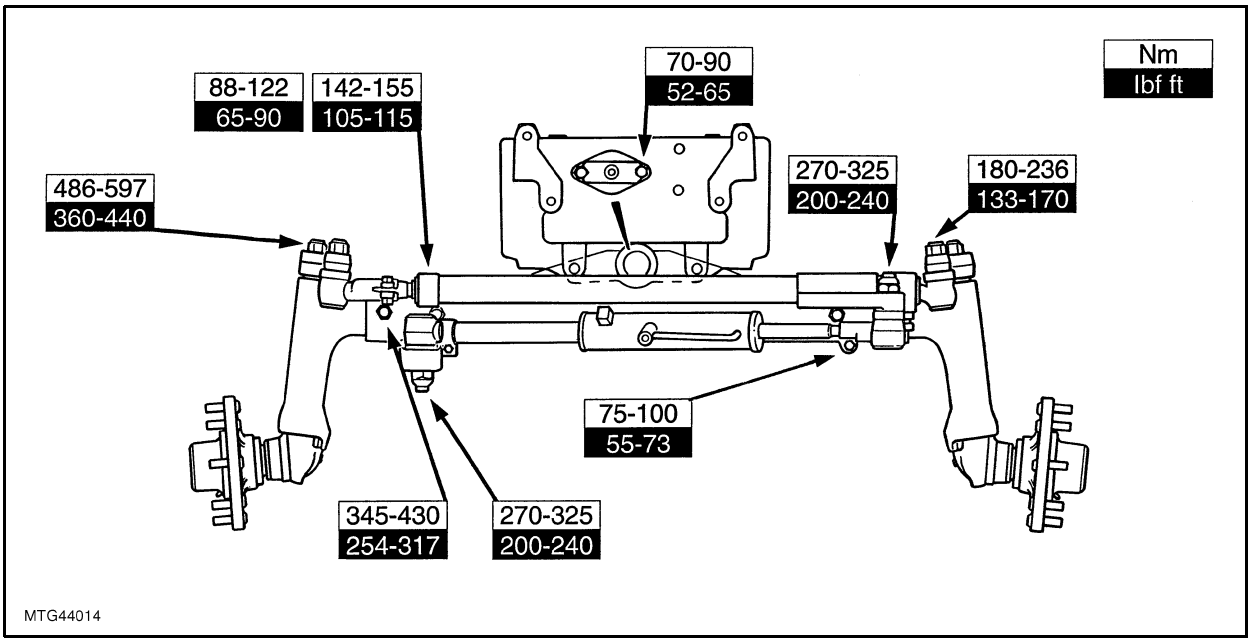

LUBRICANT

Hub bearing grease to Specification NH710A (Ambra GR9).

INDEPENDENT POWER TAKE OFF SYSTEMS SPECIFICATIONS

Refer to appropriate hydraulic pump pressure testing procedure for testing of hydraulic pressures within the PTO circuit.

Mechanically Operated PTO

Pressure Regulating Valve @ 2100 erpm	170-200 lbf/in^2	11.7-13.8 bar
@ 800 erpm	130 lbf/in^2	9 bar minimum
Lubrication Circuit Relief Valve @ 800 erpm	42-50 lbf/in^2	2.9-3.5 bar

Solenoid Operated PTO with Fixed Displacement Hydraulic Pump

Pressure Regulating Valve @ 2100 erpm	260-290 lbf/in^2	18-20 bar
@ 800 erpm	190 lbf/in^2	13 bar minimum
Lubrication Circuit Relief Valve	73-123 lbf/in^2	5.3 - 8.5 bar

Solenoid Operated PTO with CCLS Variable Displacement Hydraulic Pump

NOTE: The pressure regulating valve for tractors installed with a variable displacement CCLS hydraulic pump is incorporated within the hydraulic pump regulating valve. The lubrication circuit relief valve is housed within the 16 $\times$ 16 transmission control valve.

Pressure Regulating Valve @ 2100 erpm	260 - 290 lbf/in^2	18-20 bar
Lubrication Circuit Relief Valve	80 - 100 lbf/in^2	5.5 - 6.9 bar

Drive Gear End Float (2 Speed PTO Systems)

End Float	0.005 in	0.13 mm
Shim Sizes	0.001 in	0.025 mm
	0.003 in	0.076 mm
	0.005 in	0.127 mm
	0.012 in	0.305 mm
	0.020 in	0.508 mm

Rear Shaft End Float

End Float	0.018 - 0.40 in	0.46 - 1.0 mm
Shim Size	0.010 in	0.25 mm

TORQUES

Components	lbf.ft	Nm
Rear Shaft Bearing Retainer Bolts	48-63	65-85
Rear Shaft Bearing Retainer Bolts	48-63	65-85
PTO Output Shaft Bearing Retainer	140-170	190-230
Solenoid Valve	12-16	16-22
PTO Valve Location Adjuster		
Front Pin	20-26	27-35
Rear Pin (back off 1/4 turn)	9	1
Rear Pin Locknut	15-20	21-27
Brake Band Adjuster (back off 2 1/2 turns)	9-11	1-1.2
Clutch Support Bolts	14-17	19-23
Sump Cover Bolts	27-37	37-50
Shift Fork Bolt	20-25	27-34

SEALER

New Holland, Thread Lock and Seal, Part Number 82995773

AIR CONDITIONING SPECIFICATIONS

Refrigerant Specification	New Holland Specification 82000810 (R134a)
Refrigerant Charge	1.5 kg (3.31 lbs)
Compressor Oil Specifications	New Holland Specification 82008750 (PAG Type) (ISO 100 Viscosity) Sanden SP20
Refrigerant Oil Capacity (Compressor and system)	186 cc-228 cc

Cooling capacity @ 22° C - 49° C (75° F - 120°F) ambient. 4.5 kW Typical
(Actual capacity dependent on system control operator settings)

Combined High/Low Pressure Switch (Mounted Adjacent to Compressor)	
Low Pressure Switch	
On	2.06 bar (29.9 lbf/in^2)
Off	1.96 bar (28.4 lbf/in^2)
High pressure switch	
On	21 bar (299 lbf/in^2)
Off	26 bar (384 lbf/in^2)
Low Pressure Cut Out Switch (Mounted in Cab Roof)	
On	2.3 bar (34 lbf/in^2)
Off	0.7 bar (10 lbf/in^2)

Temperature Cycling Control Switch

Switch Setting	On	Off
Minimum Cooling	21° C	18° C
Maximum Cooling	5° C	2° C

COMPRESSOR

Manufacturer and Type	Sanden SD7H15 (model 7865)
Compressor Clutch and Pulley Air Gap	0.4-0.8 mm (0.016 and 0.031″)
Drive Belt Tension	Automatic Belt Tensioner

TORQUES

Compressor Cylinder Head Bolts		24.5-26.5 Nm (18-19.5 lbf.ft)
Compressor Clutch Front Plate retaining Bolt		11.0-14.0 Nm (8-10 lbf.ft)
Self-sealing Couplings	small	40-54 Nm (29-40 lbf ft)
	large	54-68 Nm (40-50 lbf ft)
Compressor Mounting Bolts		20.5-25.5 Nm (15-19 lbf.ft)

SECTION 2
ENGINE
CONTENTS

ENGINE OVERHAUL SPECIFICATIONS 2-2
SPECIAL TOOLS 2-11
GREASE AND SEALANTS 2-11
DIESEL ENGINE DISASSEMBLY 2-19
COOLING 2-57
LUBRICATION 2-69
FUEL GENERAL 2-77
AIR CLEANERS 2-91
ELECTRIC LIFT PUMP 2-97
INJECTORS 2-101
INJECTION PUMP 2-109
TURBOCHARGER 2-119
MANIFOLDS 2-133
INDEX 2-136

Engine Overhaul

SPECIFICATIONS

Model		**TS80**	**TS90**	**TS90**	**TS100**	**TSS110**
(T=Turbocharged)		N/A	N/A	N/A	TURBO	TURBO
Emissionised		NO	NO	YES	YES	YES
No of Cylinders		4 (450 NF)	4 (450 NA)	4 (450 NE)	4 (450 T/PF)	4 (450 T/PD)
Bore	mm	111.8	111.8	111.8	111.8	111.8
	ins	4.4	4.4	4.4	4.4	4.4
Stroke	mm	127.0	127.0	127.0	127.0	127.0
	ins	5.0	5.0	5.0	5.0	5.0
Displacement	cu cm	4987	4987	4987	4987	4987
	cu in	304	304	304	304	304
Compression Ratio		17:5–1	17:5–1	17:5–1	17:5–1	17:5–1
Cylinder Bore Compression at cranking speed of 200 R.P.M	bar	25.5	25.5	25.5	25.5	25.5
	lbs in^2	375	375	375	375	375
Firing Order		1342	1342	1342	1342	1342
Idle Speed Revs/min ± 50		750	750	750	750	750
Maximum no Load Speed Revs/min		2320	2320	2320	2320	2320
Rated Engine Speed		2170	2170	2170	2170	2070

CYLINDER BLOCK

Taper of Cylinder Bore	0.025mm (0.001 in) Repair Limit 0.127mm (0.005 in) Wear Limit
Cylinder Bore out of Round	0.03mm (0.0015 in) Repair Limit 0.127mm (0.005 in) Wear Limit
Cylinder Bore Diameters	111.778-111.841mm (4.4007-4.4032 in)
Rear Oil Seal Bore Diameter	140.77-140.87mm (5.542-5.546 in)
Block to Head Surface Flatness	0.08mm (0.003 in) in any 152mm (6 in) 0.03mm (0.001 in) in any 25.40mm (1 in)

CYLINDER HEAD

Valve Guide Bore Diameter	9.469-9.495mm (0.3728-0.3738 in)
Head to Block Surface Flatness	0.03mm (0.001 in) in any 25.4mm (1 in), or 0.127mm (0.005in) overall limit

EXHAUST VALVES

Face Angle	44°15'-44°30' Relative to the Head of Valve
Stem Diameter	Std :9.401-9.421mm (0.3701-0.3709 in) 0.076mm (0.003 in) Oversize :9.477-9.497mm (0.3731-0.3739 in) 0.38mm (0.015 in) Oversize :9.781-9.802mm (0.3851-0.3859 in) 0.030 in (0.76mm) Oversize :10.163-10.183mm (0.4001-0.4009 in)
Head Diameter	42.88-43.13mm (1.688-1.698 in)
Stem to Guide Clearance	0.048-0.094mm (0.0019-0.0037 in)
Lash Clearance (Cold)	0.43-0.53mm (0.017-0.021 in)

INTAKE VALVES

Face Angle	29°15'-29°30' Relative to Head of Valve
Stem Diameter	Std :9.426-9.446mm (0.3711-0.3719 in) 0.076mm (0.003 in) Oversize :9.502-9.522mm (0.3741-0.3749 in) 0.381mm (0.015 in) Oversize :9.807-9.827mm (0.3861-0.3869 in) 0.762mm (0.030 in) Oversize :10.188-10.208mm (0.4011-0.4019 in)
Head Diameter	47.37-47.63mm (1.865-1.875 in)
Stem to Guide Clearance	0.023-0.069mm (0.0009-0.0027 in)
Lash Clearance (Cold)	0.36-0.46mm (0.014-0.018 in)

VALVE SPRINGS

Number per Valve	1
Free Length Length, loaded at 27.7-31.3kg (61.69 lb) Length, loaded at 61-69kg (135-153 lb)	60.7mm (2.39 in) 48.26mm (1.900 in) 35.69mm (1.405 in)

VALVE TIMING

Intake Opening	12° Before Top Dead Centre
Intake Closing	38° After Bottom Dead Centre
Exhaust Opening	48° Before Bottom Dead Centre
Exhaust Closing	12° After Top Dead Centre

VALVE INSERTS

Insert Oversize	Exhaust Valve Insert Counter bore Diameter in Cylinder Head	Intake Valve Seat Insert Counter bore Diameter in Cylinder Head
0.254mm (0.010 in)	44.17-44.20mm (1.739-1.740 in)	50.01-50.04mm (1.969-1.970 in)
0.508mm (0.020 in)	44.42-44.45mm (1.749-1.750 in)	50.27-50.29mm (1.979-1.980 in)
0.762mm (0.030 in)	44.68-44.70mm (1.759-1.760 in)	50.52-50.55mm (1.989-1.990 in)

VALVE SEATS

Exhaust Valve Seat Angle	45°00' - 45°30'
Intake Valve Seat Angle	30°00' - 30°30'
Interference Valve Face Angle to Valve Seat Angle	0°30' - 1°15'
Concentricity With Guide Diameter	0.051mm (0.002 in) Total Indicator Reading Max
Seat Width Exhaust Valve Intake Valve	1.8-2.3mm (0.072-0.092 in) 1.9-2.5mm (0.078-0.098 in)

CAMSHAFT IDLER GEAR

Number of teeth	47
End Play	0.076-0.35mm (0.003-0.014 in)
Bushing Inside Diameter	50.813-50.838mm (2.005-2.0015 in)
Adaptor Outside Diameter	50.762-50.775mm (1.9985-1.9990 in)
Backlash with Crankshaft Gear	0.15-0.46mm (0.006-0.018 in)
Backlash with Camshaft Gear	0.025-0.381mm (0.001-0. 015 in)
Backlash with Fuel Injection Pump	0.10-0.15mm (0.004-0.006 in)

CAMSHAFT GEAR

Number of Teeth	52
Timing Gear Backlash	0.025-0.38mm (0.001-0.015 in)

ROCKER ARM SHAFT	
Shaft Diameter	25.40-25.43mm (1.000-1.001 in)
Shaft Support Internal Diameter	25.45-25.20mm (1.002-1.004 in)
ROCKER ARM	
Inside Diameter	25.48-25.50mm (1.003-1.004 in)
TAPPETS	
Clearance to Bore	0.015-0.053mm (0.0006-0.0021 in)
Tappet Diameter	25.118-25.130mm (0.9889-0.9894 in)
Tappet Bore Diameter	25.15-25.17mm (0.9900-0.9910 in)
CAMSHAFT	
Bearing Journal Diameter	60.693-60.719mm (2.3895-2.3905 in)
Bearing Clearance	0.025-0.076mm (0.0010-0.0030 in)
End Play	0.051-0.18mm (0.0020-0.0070 in)
CONNECTING RODS	
Small End Bushing (Internal Diameter) Normally Aspirated Turbocharged	 38.113-38.120mm (1.5005-1.5008 in) 41.288-41.259mm (1.6255-1.6258 in)
Clearance Bushing to Piston Pin	0.013-0.025mm (0.0005-0.0010 in)
Side Float	0.13-0.33mm (0.0050-0.0130 in)
Maximum Twist	0.30mm (0.0120 in)
Maximum Bend	0.10mm (0.0040 in)
PISTON PIN	
Outside Diameter Normally Aspirated Engine Turbocharged Engine	 38.095-38.100mm (1.4998-1.5000 in) 41.270-41.275mm (1.6248-1.6250 in)
PISTONS	
Skirt to Cylinder Clearance Naturally Aspirated	 0.140-0.171mm (0.0055-0.0067 in) - *New, unrun engines* 0.140-0.28mm (0.0055-0.011 in) - *Run engines*
Skirt to Cylinder Clearance Turbocharged	 0.162-0.188mm (0.0064-0.0074 in) - *New, unrun engines* 0.162-0.28mm (0.0064-0.011 in) - *Run engines*
Taper (Out of Round)	0.063-0.127mm (0.0025-0.0050 in)
Grading Diameter (at Right Angles to Piston Pin)	111.64-111.74mm (4.3951-4.3991 in) 0.0127mm (in increments of 0.0005 in)
Piston Pin Clearance	0.0030-0.0140mm (0.00012-0.00055 in) at 21°C (70°F)
Piston Crown to Block Face, Naturally Aspirated Turbocharged	 0.28-0.58mm (0.011-0.023 in) 0.0-0.3mm (0.0-0.012 in)

PISTON RINGS

Compression rings, Number and Location	2 off -1st and 2nd from the top of the piston
Naturally Aspirated, Top Compression Ring 2nd Compression Ring	 Parallel Sides-Inner Chamfer or no Chamfer Straight Face-Inner Step
Turbocharged, Top Compression Ring 2nd Compression Ring	 Keystone Tapered With Internal Chamfer to Top Straight Face-Inner Step
Oil Control, Number and Location Type	 1 off,-Directly above the Piston Pin, Slotted With Expander
Side Face Clearance To Ring Groove, Top Compression Ring 2nd Compression Ring Oil Control Ring	 0.112-0.155mm (0.0044-0.0061 in) 0.099-0.142mm (0.0039-0.0056 in) 0.061-0.104mm (0.0024-0.0041 in)
Gap Width, Top Compression Ring 2nd Compression Ring Oil Control Ring	 0.38-0.84mm (0.015-0.033 in) 0.66-1.12mm (0.026-0.044 in) 0.38-0.84mm (0.015-0.033 in)

CRANKSHAFT

Main Journal Diameter-	85.631mm (3.3713 in) 85.656mm (3.3723 in)
Main Journal Length (except thrust, rear, or intermediate)	36.96-37.21mm (1.455-1.465 in)
Main Journal Wear Limits	0.127mm (0.005 in) Maximum
Main and Crankpin Fillet Radius	3.048-3.556mm (0.12-0.14 in)
Thrust Bearing Journal Length	37.06-37.11mm (1.459-1.461 in)
Intermediate Bearing Journal Length	36.96-37.21mm (1.455-1.465 in)
Rear Bearing Journal Length	37.97-38.48mm (1.495-1.515 in)
Crankpin Journal Length	42.62-42.72mm (1.678-1.682 in)
Crankpin Diameter	69.840-69.850mm (2.749-2.7500 in)
End Play	0.10-0.20mm (0.004-0.008 in)
Crankpin Out of Round	0.005mm (0.0002 in) Total Indicator Reading
Taper Surface Parallel to Centre Line of Main Journal	0.005mm (0.0002 in)
Crankshaft Rear Oil Seal Journal Diameter	122.12-122.28mm (4.808-4.814 in)
Crankshaft Pulley Journal Diameter	44.45-44.48mm (1.750-1.751 in)
Crankshaft Timing Gear Journal Diameter	46.23-46.25mm (1.820-1.821 in)
Crankshaft Flange Runout	0.038mm (0.0015 in) Maximum

CRANKSHAFT DRIVE GEAR

Number of teeth	26

MAIN BEARING

Liner length (except thrust liner)	27.94-28.19mm (1.10-1.11 in)
Liner Length (Thrust Liner)	39.91-39.96mm (1.453-1.455 in)
Vertical Assembled Bearing Clearance	0.055-0.117mm (0.0021-0.0046 in)

CRANKPIN BEARINGS

Liner Length	35.56-35.81mm (1.40-1.41 in)
Vertical Assembled Bearing Clearance	0.035-0.094mm (0.0014-0.0037 in)

CRANKSHAFT RE-GRINDING

When re-grinding a crankshaft the main and crankpin journal diameters should be reduced the same amount as the undersize bearings used, and the following dimensions apply. The rear end of the crankshaft should be located on the 60° Chamfer of the pilot bearing bore.

UNDERSIZE BEARING AVAILABLE	MAIN JOURNAL DIAMETERS
0.051mm (0.002 in)	85.580-85.593mm (3.3693-3.3698 in)
0.254mm (0.010 in)	85.390-85.402mm (3.3618-3.3623 in)
0.508mm (0.020 in)	85.136-85.148mm (3.3518-3.3523 in)
0.762mm (0.030 in)	84.882-84.894mm (3.3418-3.3423 in)
1.016mm (0.040 in)	84.628-84.640mm (3.3318-3.3323 in)

UNDERSIZE BEARING AVAILABLE	CRANKPIN JOURNAL DIAMETERS
0.051mm (0.002 in)	69.789-69.799mm (2.7476-2.7480 in)
0.254mm (0.010 in)	69.956-69.606mm (2.7400-2.7404 in)
0.508mm (0.020 in)	69.342-69.352mm (2.7300-2.7304 in)
0.762mm (0.030 in)	69.088-69.098mm (2.7200-2.7204 in)
1.016mm (0.040 in)	68.834-68.844mm (2.7100-2.7104 in)

BALANCER

Gear Backlash	0.05-0.25mm (0.002-0.010 in)
Shaft to bushing clearance	0.0127.0-0.038mm (0.0005-0.0015in)
Shaft Diameter	25.133-25.40mm (0.9895-1.000 in)
Backlash between balancer / crankshaft gear	0.05-0.20mm (0.002-0.008 in)
End float balancer gear to support	0.20-0.51mm (0.008-0.020 in)

FLYWHEEL

Ring Gear Runout	0.63mm (0.025 in)
Flywheel Runout	0.27mm (0.005 in)
Maximum depth to be skimmed from face	3 mm (0.118 in)

OIL PUMP

Rotor Clearance	0.025-0.15mm (0.001-0.006 in)
Rotor to Pump Housing Clearance	0.15-0.28mm (0.006-0.011 in)
Rotor End Play	0.025-0.089mm (0.001-0.0035 in)
Oil Pressure	1.24 bar (18 lbs in^2) minimum at idle speed, 2.76 bar (40 lbs in^2) minimum at rated speed
Pump Gear to Camshaft Gear Backlash	0.40-0.56mm (0.016-0.022 in)

OIL FILTER SUPPORT

Relief Valve, Operating Pressure	4.0 bar (59 lb in^2)
Flow Rate	68 litres/min (15 imp gals/min) 18 US gals/min
Relief Valve, Spring Free Length	52.8mm (2.08 in)

Temperature	Oil Viscosity and Type	API Classification	Engine Oil & Filter Change Period (hours)
-12°C (Below 10°F)	Low Ash , SAE 5W or Low Ash SAE 5W/20 or SAE 10W-30	SF/CD / CF-4	150 150 150
-12°C to 4°C (10°F to 40°F)	Low Ash , SAE 10W Series 3 or SAE 10W-30	SF/CD / CF-4	150 300
0°C to 32°C (32°F to 90°F)	Low Ash , SAE 30W Series 3 or SAE 10W-40	SF/CD / CF-4	300 300
Above 24°C (75°F)	Low Ash , SAE 30W Series 3 or SAE 15W-40	SF/CD / CF-4	300

NOTE: *When using diesel fuel with a sulphur content below 1.0%, Series 3 diesel engine oil with an A.P.I. classification of CD may be used instead of CF-4 oil , but the oil and filter interval must be reduced to 150 hours .*

When using diesel fuel with a sulphur content between 1% and 1.3% use only oils listed above but reduce the oil and filter change period to every 50 hours .

ENGINE OIL CAPACITIES (With Oil Filter)

Model	Litres	Imp Gals	U.S. Gals
4 CYL	11.4	2.5	3.0

THERMOSTAT

Opening Temperature	79-83°C (174-181°F)
Fully Open	93-96°C (199-205°F)

RADIATOR CAP

Opening Pressure	0.9 bar (13 lbs in^2)

WATER PUMP

Type	Centrifugal
Drive	Multi V Belt

COOLING SYSTEM CAPACITIES

Model	Litres	Imp gals	U.S. gals
4 CYL (with cab)	16	3.5	4.2
4 CYL (less cab)	14.5	3.2	3.8

COOLING FLUID
Content Mixture – Use Anti-freeze (50%) plus clean, soft water (50%)
Type Ambra Agriflu (NH 900 A)

MINIMUM HARDWARE TIGHTENING TORQUES

IN FOOT POUNDS (NEWTON-METERS) FOR NORMAL ASSEMBLY APPLICATIONS

INCH HARDWARE AND LOCKNUTS

	SAE GRADE 2		SAE GRADE 5		SAE GRADE 8		LOCKNUTS		
NOMINAL SIZE	UNPLATED or PLATED SILVER	PLATED W/ZnCr GOLD	UNPLATED or PLATED SILVER	PLATED W/ZnCr GOLD	UNPLATED or PLATED SILVER	PLATED W/ZnCr GOLD	GR.B w/GR5 BOLT	GR.C w/GR8 BOLT	NOMINAL SIZE
1/4	55* (6.2)	72* (8.1)	86* (9.7)	112* (13)	121* (14)	157* (18)	61* (6.9)	86* (9.8)	1/4
5/16	115* (13)	149* (17)	178* (20)	229* (26)	250* (28)	324* (37)	125* (14)	176* (20)	5/16
3/8	17 (23)	22 (30)	26 (35)	34 (46)	37 (50)	48 (65)	19 (26)	26 (35)	3/8
7/16	27 (37)	35 (47)	42 (57)	54 (73)	59 (80)	77 (104)	30 (41)	42 (57)	7/16
1/2	42 (57)	54 (73)	64 (87)	83 (113)	91 (123)	117 (159)	45 (61)	64 (88)	1/2
9/16	60 (81)	77 (104)	92 (125)	120 (163)	130 (176)	169 (229)	65 (88)	92 (125)	9/16
5/8	83 (112)	107 (145)	128 (174)	165 (224)	180 (244)	233 (316)	90 (122)	127 (172)	5/8
3/4	146 (198)	189 (256)	226 (306)	293 (397)	319 (432)	413 (560)	160 (217)	226 (306)	3/4
7/8	142 (193)	183 (248)	365 (495)	473 (641)	515 (698)	667 (904)	258 (350)	364 (494)	7/8
1	213 (289)	275 (373)	547 (742)	708 (960)	773 (1048)	1000 (1356)	386 (523)	545 (739)	1

NOTE: Torque values shown with * are inch pounds.

IDENTIFICATION
CAP SCREWS AND CARRIAGE BOLTS

SAE GRADE 2 SAE GRADE 5 SAE GRADE 8

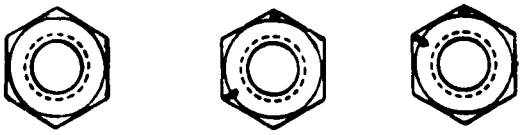

REGULAR NUTS SAE GRADE 5 HEX NUTS SAE GRADE 8 HEX NUTS

LOCKNUTS

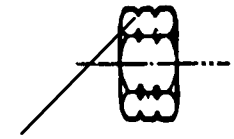

GRADE IDENTIFICATION
GRADE A NO NOTCHES
GRADE B ONE CIRCUMFERENTIAL NOTCH
GRADE C TWO CIRCUMFERENTIAL NOTCHES

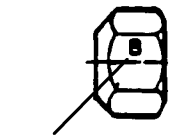

GRADE IDENTIFICATION
GRADE A NO MARKS
GRADE B LETTER B
GRADE C LETTER C

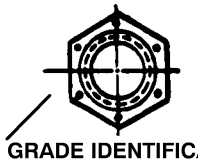

GRADE IDENTIFICATION
GRADE A NO MARKS
GRADE B THREE MARKS
GRADE C SIX MARKS
MARKS NEED NOT BE LOCATED AT CORNERS

TORQUE VALUES - VARIOUS	Nm	lbf ft	Kgf m
Main Bearing Bolts	197	145	20.0
Connecting Rod Bolts	149	110	15.2
Cylinder Head Bolts (with Engine Cold)	217	160	22.0
Intake Manifold-to-Cylinder Head	35	26	3.5
Exhaust Manifold-to-Cylinder Head	38	28	3.9
Exhaust Pipe-to-Flange	31	23	3.2
Flywheel-to-Crankshaft	197	145	20.0
Oil Pan Drain Plug	41	30	4.2
Valve Rocker Cover Bolts	24	18	2.4
Crankshaft Pulley-to-Crankshaft	224	210	23.0
Self-Locking Screw - Valve Rocker Arm	24	18	2.4
Injector Attachment Bolts	23	17	2.3
Cover Bolts	31	23	3.1
Oil Pump to Block	23	17	2.3
Water Pump-to-Cylinder Block	48	35	3.6
Water Pump Cover-to-Pump	27	20	2.8
Oil Pan-to-Cylinder Block (Cast)	38	28	3.9
Injector Line Nuts	24	18	2.4
Leak-off Tube Banjo Fitting Bolts	11	8	1.1
Injection Pump-to-Front Cover	24	18	2.4
Camshaft Idler Drive Gear-to-Block	237	175	24.0
Front Cover-to-Cylinder Block	24	18	2.4
Thermostat Housing Bolts	24	18	2.4
Camshaft Gear Bolt	69	51	7.0
Camshaft Rear Gear Plate Bolts	47	35	4.8
Oil Filter Adaptor Bolts	42	31	4.2
Oil Filter Mounting Bolt Insert	34	25	3.5
Starting Motor-to-Rear Adaptor Plate	31	23	3.2
Injection Pump-to-Gear Nut	79	58	8.0
Oil Pressure Switch Assembly	31	23	3.2
Turbocharger-to-Exhaust Manifold Nut	44	33	4.5
Fan Blade to Support Body	27	21	2.8
Crankshaft Rear Oil Seal Retainer -			
Initial Tightening	12	9	1.2
Final Tightening	23	17	2.3
Belt Tensioner Pulley Bolt	54	40	5.5
Temperature Senders	20	15	2.0
Tensioner to Water Pump Bolt	54	40	5.5
Idler Pulley Bolt	54	40	5.5
Pump Connector to Block	24	18	2.4

CYLINDER BLOCK PLUG TORQUES	Nm	lbf ft	Kgf m
1/4 in-27 NPT	11	8	1.1
1/4 in-18 NPT	29.8	22	3.0
3/4 in-18 NPT	38	28	3.8
3/4 in-14 NPT	27	20	2.7

SPECIAL TOOLS

DESCRIPTION	V.L. CHURCHILL TOOL No.	NUDAY TOOL No.	NH TOOL No.
Adjustable Bridge Puller	518	9539	09539
Shaft Protectors	625-A	9212	09212
Step Plate Adaptors	630-S	9210	09210
Bushing Kit	818	9514	09514
Valve Guide Reamer Kit	FT.6202 (SW.502)	2136 (SW.502)	02136
Camshaft Bearings - Remover/Installer Handle	 FT.6203 N6261-A	 1255 (SW.506) 1442	 01225 01442
Water Pump Seal Replacer	FT.6209	4672	T87T-6312-A
Connecting Rod Bush - Removal Installation			 NH 00035 OTC 134-00002
Crankshaft Seal Replacer Front Seal Rear Seal	 NH10-103 FT 6212		 NH 01301

GREASE and SEALANTS

PART NUMBER	TYPE	NAME
	NH 1 710 A	Grease -General Purpose
	NH 1 720 A	Grease-Molybdenum Disulphide
82995768	ESE-M4G194-B	Sealer-Anaerobic Low strength
82995776	ESE-M4G195-A	Sealer-Silicone
82995774	SP-M4G9112-A	Sealer-Polyester Urethane
82995773	SP-M4G9112-C	Sealer-Polyester Urethane
82995772	ESE-M4G217-A	Sealer-Anaerobic
82995771	SP-M2G9121-B	Sealer-RTV Silicone rubber
82995782		Gasket Removal - Spray

FAULT FINDING

IMPORTANT: *When effecting a repair the cause of the problem must be investigated and corrected to avoid repeat failures.*

PROBLEM	POSSIBLE CAUSES	REMEDY
Engine does not develop full power	1. Clogged air cleaner	1. Clean or renew element
	2. Fuel line obstructed	2. Clean
	3. Faulty injectors	3. Clean and reset
	4. Incorrect valve lash adjustment	4. Check and reset
	5. Burnt, worn or sticking valves	5. Replace valves with new or oversize, and/or machine the valve guide bores
	6. Blown head gasket	6. Check head flatness and fit new gasket
	7. Incorrect fuel delivery	7. Check injectors and pump
	8. Low cylinder compression	8. Renew piston rings or re-bore/re-sleeve as necessary
Oil pressure warning light fails to operate	1. Bulb burnt out	1. Renew bulb
	2. Warning Light pressure switch faulty	2. Renew pressure switch
	3. Warning light circuit faulty	3. Check and renew wiring
Excessive exhaust smoke	1. Oil leak on compressor or turbine side of turbocharger, where fitted	1. Overhaul turbocharger
	2. Exhaust leak on exhaust manifold side of turbocharger, where fitted	2. Fit new gasket
	3. Air cleaner dirty or restricted	3. clean
	4. Excessive fuel delivery	4. Overhaul injection pump and injectors
Water temperature gauge fails to reach normal operating temperature	1. Faulty temperature sender	1. Renew sender switch
	2. Incorrect or faulty thermostat	2. Renew thermostat
	3. Faulty water temperature gauge	3. Renew temperature gauge

PROBLEM	POSSIBLE CAUSES	REMEDY
Engine knocks	1. Diluted or thin oil	1. Check crankshaft bearings for damage, change as required. Drain and refill with specified oil and renew filter. Ascertain cause of dilution
	2. Insufficient oil supply	2. Check oil level and top up as necessary. Overhaul or renew pump as necessary. Check oil filter is not clogged
	3. Low oil pressure	3. Overhaul pump or relief valve as necessary
	4. Excessive crankshaft end play	4. Install new thrust bearing liner
	5. Flywheel or ring gear run-out excessive	5. Skim flywheel or fit new ring gear
	6. Excessive connecting rod or main bearing clearance	6. Install new bearing inserts and/or re-grind crankshaft
	7. Bent or twisted connecting rods	7. Renew connecting rods
	8. Crankshaft journals out-of-round	8. Re-grind crankshaft and fit undersize bearing inserts
	9. Excessive piston-to-cylinder bore clearance	9. Re-bore/re-sleeve block and fit new pistons
	10. Excessive piston ring clearance	10. Fit new pistons and rings
	11. Broken rings	11. Fit new rings, check bore and pistons for damage
	12. Excessive piston pin clearance	12. Fit new piston or pin
	13. Piston pin retainer loose or missing	13. Install new retainer, and check bore/pistons for damage
	14. Excessive camshaft play	14. Install new thrust plate
	15. Imperfections on timing gear teeth	15. Renew timing gear
	16. Excessive timing gear backlash	16. Renew timing gear

PROBLEM	POSSIBLE CAUSES	REMEDY
Engine overheats	1. Hose connection leaking or collapsed	1. Tighten hose connection, renew hose if damaged
	2. Radiator cap defective or not sealing	2. Renew radiator cap
	3. Radiator leakage	3. Repair/renew radiator
	4. Improper fan belt adjustment	4. Re-adjust fan belt
	5. Radiator fins restricted	5. Clean with compressed air
	6. Faulty thermostat	6. Renew thermostat
	7. Internal engine leakage	7. Check for source of leakage, renew gasket or defective parts
	8. Water pump faulty	8. Overhaul water pump
	9. Exhaust gas leakage into cooling system	9. Renew cylinder head gasket, check head for damage or distortion
	10. Coolant aeration	10. Tighten all connections and check coolant level is correct. Ensure cylinder head gasket has not blown
	11. Cylinder head gasket improperly installed	11. Renew cylinder head gasket
	12. Hot spot due to rust and scale or clogged water jackets	12. Reverse flush entire cooling system
	13. Obstruction to radiator air flow	13. Remove the obstruction
	14. Extended engine idling	14. Do not allow engine to idle for long periods
	15. Oil cooler tube blocked	15.Clean
	16. Radiator core tubes blocked	16. Check free flow

PROBLEM	POSSIBLE CAUSES	REMEDY
Low oil pressure	1. Engine oil level low	1. Top up, as necessary
	2. Wrong grade of oil	2. Drain and refill with correct grade of oil
	3. Blocked oil pump sump screen	3. Clean pump screen
	4. Oil pressure relief valve faulty	4. Fit new relief valve
	5. Oil pump worn	5. Renew Oil Pump
	6. Excessive oil pump rotor and shaft assembly clearance	6. Overhaul pump
	7. Excessive main or connecting rod bearing clearance	7. Install new bearings inserts and / or re-grind crankshaft
Excessive oil consumption	1. Engine oil level too high	1. Reduce oil level
	2. External oil leaks	2. Renew gaskets and seals, where necessary. Check mating surfaces for damage or distortion
	3. Worn valves, valve guides or bores	3. Renew
	4. Cylinder head gasket leaking	4. Renew gasket. Check head for damage or distortion
	5. Oil loss past the pistons and rings	5. Renew rings and/or rebore/ re-sleeve block as necessary
	6. Oil cooler leak	6. Repair/renew oil cooler assembly
	7. Rocker cover oil filter blocked	7. Change filter
Engine tends to keep firing after fuel is shut off	1. Air cleaner dirty or restricted	1. Clean or renew element
	2. Oil leak on compressor side of turbocharger where fitted	2. Overhaul turbocharger

DESCRIPTION AND OPERATION

All TS range tractor engines are 4 cylinder and available in naturally aspirated and turbocharged forms.

All engines feature cross flow cylinder heads, with the inlet and exhaust manifolds on opposite sides of the cylinder head. The fuel and air combustion process, takes place in the specially designed bowl in the crown of the pistons.

CYLINDER HEAD ASSEMBLY

The cylinder head incorporates valves and springs, with the valve rocker arm shaft assembly bolted to the cylinder block through the cylinder head. Cylinder head retaining bolts are evenly spaced with a six point pattern around each cylinder, this ensures an even clamping load across the cylinder head area.

The intake and exhaust manifolds are bolted to the head, the intake manifold is mounted on the right hand side of the engine, with the diesel injectors mounted outside the rocker cover. The exhaust manifold is mounted on the left hand side of the engine. Water outlet connections and thermostat being attached to the front of the cylinder block directly behind the radiator.

Valve guides are integral in the cylinder head, and valves with oversize stems are available in service. Special replaceable cast alloy valve seats are pressed into each valve port during manufacture, with oversize valve seats also available in service.

The exhaust valves are fitted with positive valve rotators with all valves using umbrella type oil seals. Valve lash is maintained by adjustment of the self locking adjusting screw, mounted in each of the rocker arms.

CAMSHAFT ASSEMBLY

The camshaft runs in 3 replaceable bearings. The camshaft drive gear is in mesh with and driven by the camshaft idler gear and crankshaft timing gear.

Camshaft end thrust is controlled by a thrust plate bolted to the block, and located between the camshaft gear and the front camshaft journal.

A helical gear is mounted on the rear of the camshaft, and drives the engine oil lubrication pump mounted forward of the flywheel.

CRANKSHAFT ASSEMBLY

The crankshaft is supported in the cylinder block by 5 main bearings. The crankshaft is manufactured from nodular cast iron with machined finished crank webs. End thrust is controlled by a thrust bearing incorporated in the centre main bearing of the crankshaft.

Front and rear crankshaft oil sealing is effected by one piece seals that are designed for long and durable service life.

CONNECTING RODS

Connecting rods (wedge) shaped at the small end have been designed to reduce the reciprocating weight at the piston end. The connecting rods are of a heavy beam construction and are assembled as a matched set to each engine, attached to the crankshaft, by means of insert–type bearings.

They are retained in position by the connecting rod big end cap and secured by two bolts per rod. The small end of the connecting rod is fitted with a replaceable bronze bushing, through which the free floating piston pin is fitted. The steel pin being held in place within the piston by two snap rings.

PISTONS

Pistons are constructed of an aluminium silicon alloy with an iron insert for the top ring. The combustion chamber being recessed into the piston crowns. Each piston has two compression rings and one oil control ring, to reduce friction and increase positive sealing. All rings are located above the piston pin.

MANIFOLDS

The cross flow design aluminium intake, and cast iron exhaust manifolds, are on opposite sides of the cylinder head. This is designed to maintain balanced heat distribution within the cylinder head. The configuration of the manifolds also ensures minimum heat transfer to the intake manifold.

The intake manifold is connected through tubing to the air cleaner and in the rear end of the manifold a tapped hole is provided for installation of a thermostart or an ether cold starting aid (North America Only).

NOTE: *On tractors where cold start equipment is not installed ensure the plug in the intake manifold is kept tight at all times. Considerable damage to the cylinder bores, may be incurred by entry of dust or other foreign material if the plug is left loose or missing. Also dirt and grit may be drawn through the air cleaner connections if they are not properly secured.*

CYLINDER BLOCK ASSEMBLY

The cylinder block is an alloy cast iron with deep cylinder skirts, and water jackets for cooling the cylinders. The cylinder bores are machined integral with the cylinder block, during the manufacturing process.

Cylinders are in line and vertical and numbered from 1 to 4 from the front to the rear of the engine. They can be bored oversize for the fitment of sleeves, which are available in service.

The oil pan which is attached to the bottom of the cylinder block, is the reservoir for the engine oil

lubrication system. An aluminium engine front cover and front plate is attached to the front of the engine and covers all of the timing gear assembly.

TIMING GEARS

The crankshaft timing gear is heated and press fitted on to the front of the crankshaft, to a high degree of accuracy during manufacturing. This enables precise timing being maintained during the life of the engine. The crankshaft gear drives the camshaft idler gear which is attached to the front of the cylinder block. The idler gear then drives the camshaft and the injection pump via meshing helical gears. The camshaft gear is bolted to the front of the camshaft, and is keyed to maintain position of the gear on the camshaft.

LUBRICATION SYSTEM

Lubrication of the engine, figure 1, is maintained by a rotor type oil pump mounted in the rear of the engine block, behind the flywheel. The oil pump is driven from the rear of the camshaft and draws oil from the engine oil pan through a tube and screen assembly.

A spring loaded relief valve is integral with the oil filter body mounted on the left hand side of the engine block, and prevents over pressurisation of the system.

An integral radiator/engine oil cooler is fitted. Oil flows from the filter to main oil gallery, which runs the length of the block and intersects the camshaft follower chamber.

The main gallery also supplies oil to the crankshaft main bearings, connecting rods, big ends, small ends. The underside of the pistons and pins, are lubricated by oil pressure jets mounted adjacent to each main journal housing.

The camshaft drive gear bushing is pressure lubricated through a drilled passage from the front main bearing. The gear has small oil passages machined on both sides allowing excess oil to escape.

Timing gears are lubricated by splashed oil from the cam follower chamber, and the pressure lubricated camshaft drive gear bushing.

An intermittent flow of oil is directed to the valve rocker arm shaft assembly via a drilled passage in the cylinder block. This is located vertically above above No 1 camshaft bearing, and aligns to a hole in the cylinder head. The rotation of the camshaft allows a controlled intermediate flow of lubrication.

The turbocharger where fitted, is supplied with oil from the oil filter support housing, mounted on the left hand side of the engine.

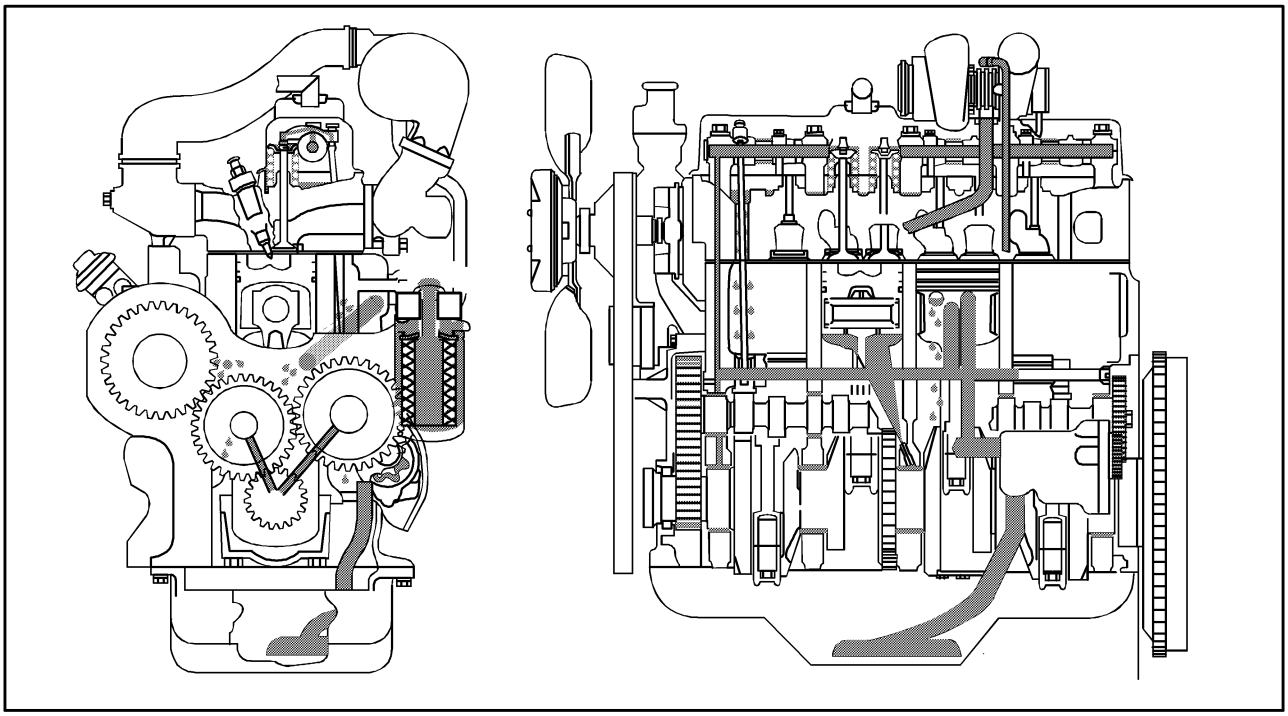

Engine Oil Flow

1

COOLING SYSTEM

NOTE: *Do not operate an engine without a thermostat. It is recommended that a solution of a 50% clean water, and 50% recommended antifreeze, see specifications, is used. When the recommended Antifreeze is not used, a 5% solution of the recommended inhibitor must be added to the cooling system.*

The function of the water pump mounted at the front of the engine, is to maintain a continuous flow of water around the cooling system. This is essential to ensure correct engine temperature, and performance, during vehicle operation.

The pump is driven by a 'Multi V' Belt from the crankshaft pulley, when the engine is running.

The cooling system for the new generation engines, is of the recirculating by-pass type with full length water jackets for each cylinder. The coolant is drawn from the bottom tank of the radiator by the water pump, which passes the coolant to the cylinder block. This coolant then cools the cylinder walls.

Passages in the cylinder head gasket allow coolant to flow from the cylinder block, into the cylinder head. Cored passages also conduct the coolant to the fuel injector nozzle locations, before re-entering the water pump below the thermostat.

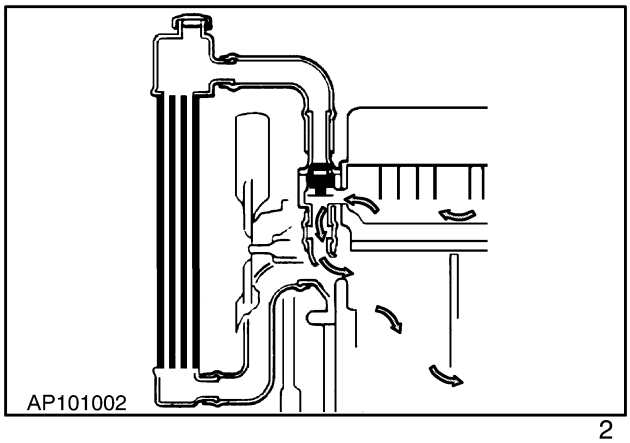

2

The thermostat is located in the top of the water pump body, and controls the flow of the water as required by temperature changes.

NOTE: *A faulty thermostat may cause the engine to operate at too hot, or cold, an operating temperature. If not replaced this could result in a damaged engine, or impaired engine performance.*

When the thermostat is closed Figure 2**,** a recirculating by-pass is provided to allow the coolant to recirculate from the head to the block to effect a faster warm-up.

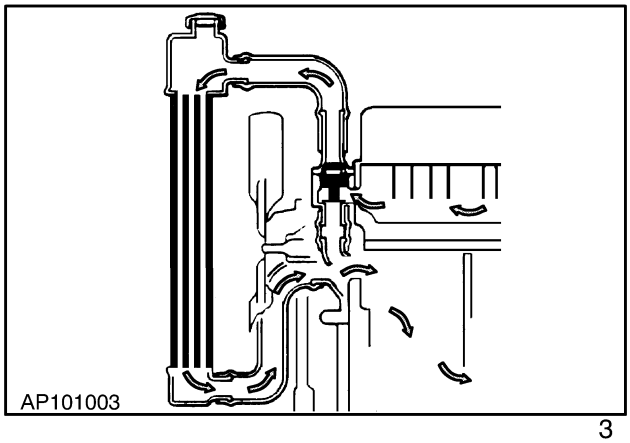

3

Once the engine has reached its normal operating temperature, the thermostat will open Figure 3 and allow water to be drawn through the radiator by the pump action. Cooled water then returns to the engine system.

Cooling occurs as the coolant passes down through the radiator cores, which are exposed to the air as it is drawn through the radiator by the fan.

The cooling system incorporates a drain plug on the right hand side of the cylinder block (1), Figure 4.

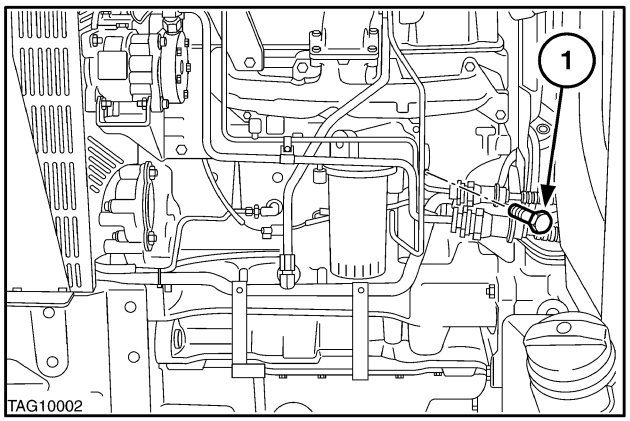

4

DIESEL ENGINE DISASSEMBLY

WARNING: *Allow the engine to cool to ambient temperature before cleaning. Cleaning a hot engine in cool water could result in damage to the Fuel Pump and other components.*

In the following procedures and illustrations the engine in the main is shown removed from the tractor.

The engine overhaul procedure initially describes the assembly process for rebuilding an engine using all new components. Following this section are defined headings which describe detailed repair specifications and procedures, where components are suitable for re-use. Refer to the specifications section to ensure components are serviceable.

Where overhaul of components is required without engine being removed from the tractor refer to the following headings, and the relevant paragraphs, in the main overhaul procedure.

Operations or repairs that can be performed with the engine still in the tractor.

- Cylinder head and associated components.
- Fuel injection pump and related parts.
- Water pump, thermostat, and associated components.
- Oil pump relief valve.
- Oil pan and gasket.
- Turbocharger.
- Front timing cover/timing gear removal.
- Oil pan removal for access to crankshaft, bearing shells, piston removal, and oil pump suction tubing.
- Front pulley and damper assembly.

Operations or repairs that can be performed with the engine removed from the vehicle and separated from the transmission housing, with oil pan removed.

- Crankshaft rear oil seal and carrier removal, (with oil pan removed).
- Oil pump and drive gear removal.

NOTE: *All gaskets, seals, and 'O' rings must be replaced with new upon re-assembly. Where new sealant is to be applied refer to "Engine Specifications".*

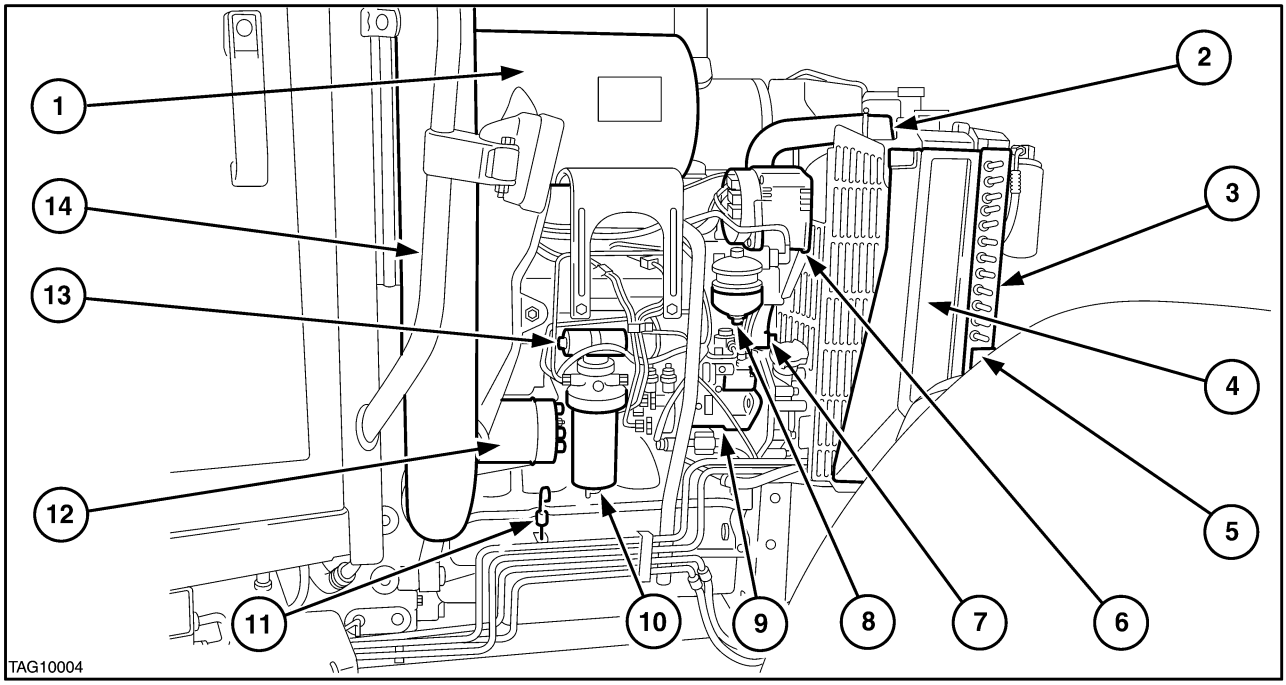

Right Hand View of Engine – Emisionised Engine 5

1. Air Filter
2. Coolant Recovery Tank
3. Air Conditioning Condenser (where fitted)
4. Coolant Radiator
5. Hydraulic Oil Cooler
6. Alternator
7. Water Pump
8. Fuel Sedimentor Separator
9. Fuel Injection Pump – Emisionised
10. Fuel Filter
11. Engine Oil Dipstick
12. Starter Motor
13. Electric Fuel Pump
14. Cold Start

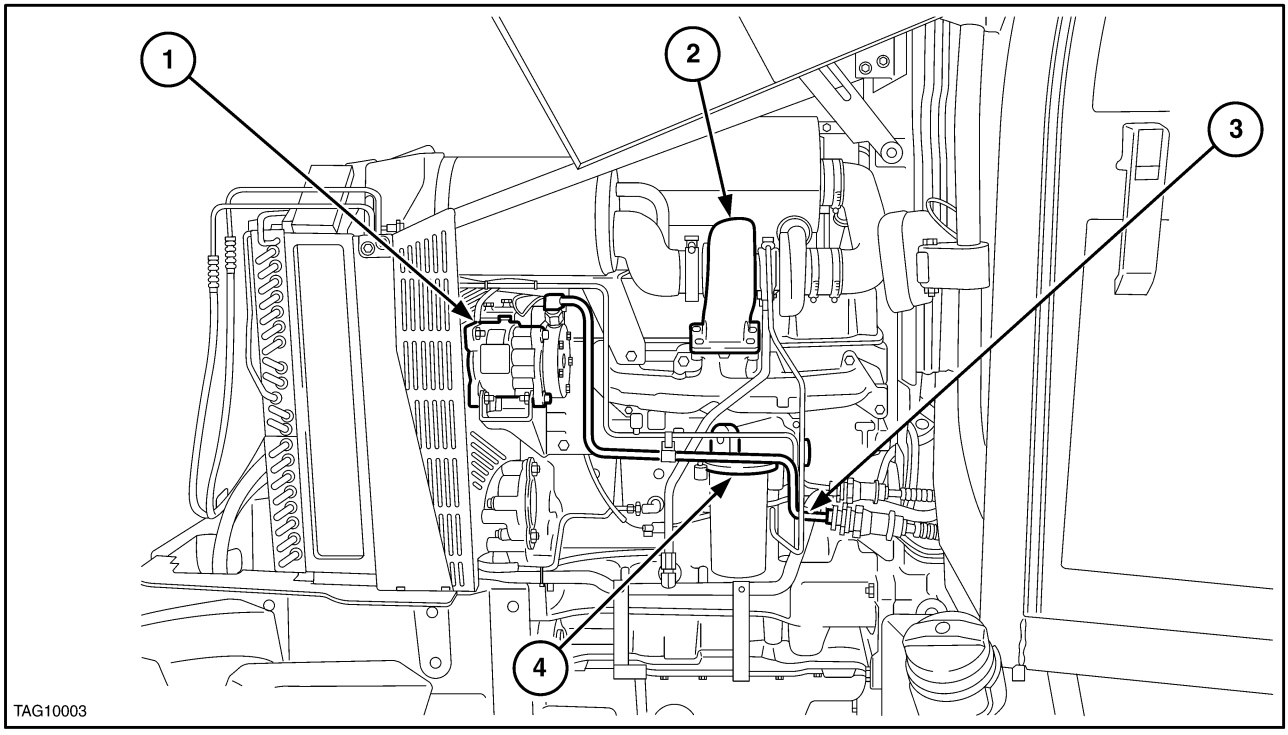

Left Hand View of Engine (Turbo) 6

1. Air Conditioning Compressor
2. Turbo – where fitted
3. Engine Block Coolant Drain Plug
4. Oil Filter Head Incorporating Relief Valve

Separating Front Axle from Engine (with reference to Figures

1. Disconnect **battery,** ground lead first.

2. Disconnect **power steering hoses** from cylinder. Figure 7.

3. Remove front wheel drive **propshaft guard and propshaft**, if fitted.

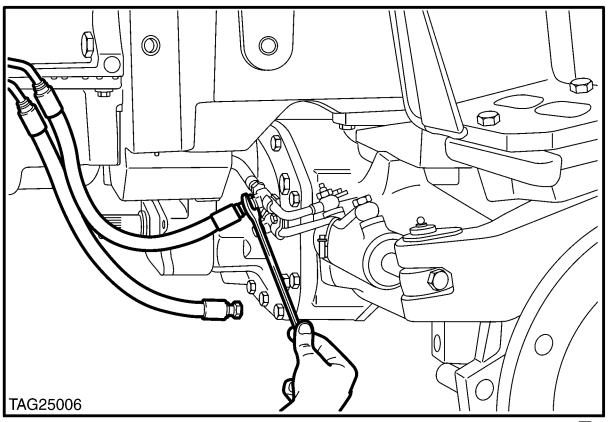

7

4. Disconnect the **front differential lock hydraulic tube** on FWD models. Figure 9.

5. If **air conditioning** is fitted, withdraw the condenser from the radiator and remove the receiver dryer. Carefully move both items away from the front of the tractor and secure to the side of the engine ensuring that they are not allowed to hang on their tubes.

6. Slide out the **oil cooler** from the radiator and tie up out of the way, again ensuring that the cooler is not allowed to hang on its hoses.

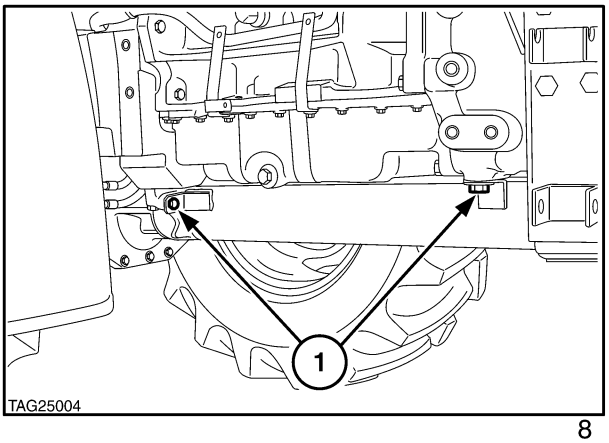

8

7. Drain the **cooling system fluid** into a clean container and disconnect the radiator hoses. Disconnection of the radiator lower hose provides a suitable drain point.

8. Disconnect air cleaner inlet tube.

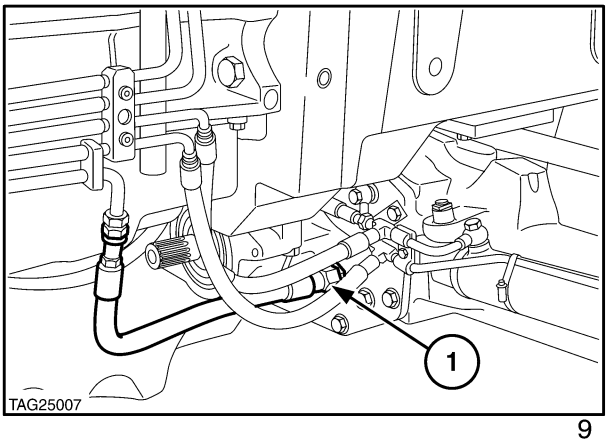

9

9. Position splitting Tool, MS2700.C with engine supports, MS2700–C–8 in position. If splitting tool is not available use an overhead crane with suitable straps. Strap at the front and rear of the front support to maintain balance.

   NOTE: *It will be necessary to remove the engine hood.*

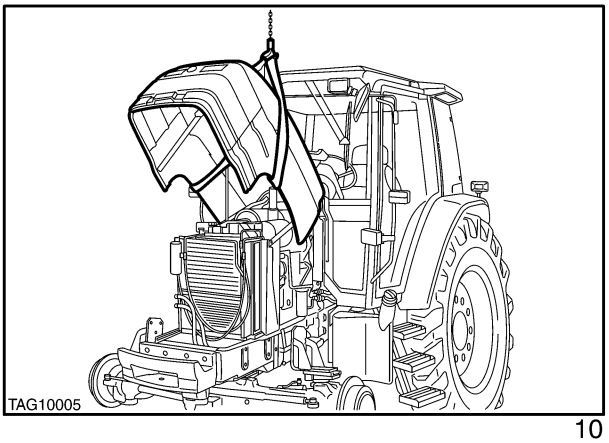

10

10. Support the engine at the front of the transmission and position wedges between axle and support to prevent articulation. Remove hardware securing the engine to the front support and wheel the front axle and support away from the engine.

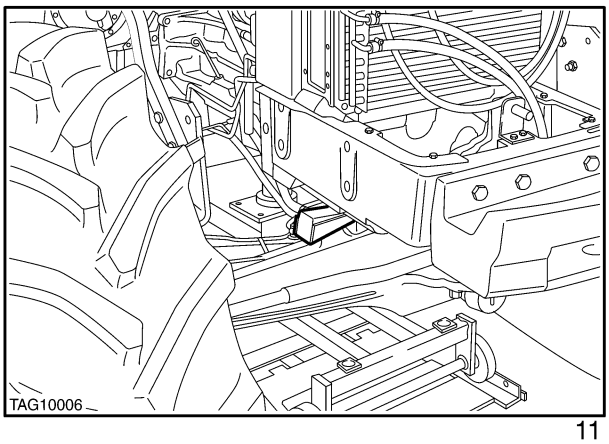

11

Separating Engine From Transmission (with reference to Figures 10 and 6)

1. Remove the exhaust muffler.

2. Disconnect hood harness connector, and remove the engine hood assembly, Figure 10.

3. Disconnect the fuel filter (2), starter motor wiring and retaining bolts (1) and remove starter motor, Figure 12.

4. Disconnect the fuel lines to the fuel sedimenter and the overflow return to tank.

5. Disconnect fuel injection pump control cable, Figure 13.

6. Disconnect steering and lubrication pipes, near bellhousing.

7. Disconnect the heater hoses near bellhousing.

8. Disconnect air conditioning at quick release connectors.

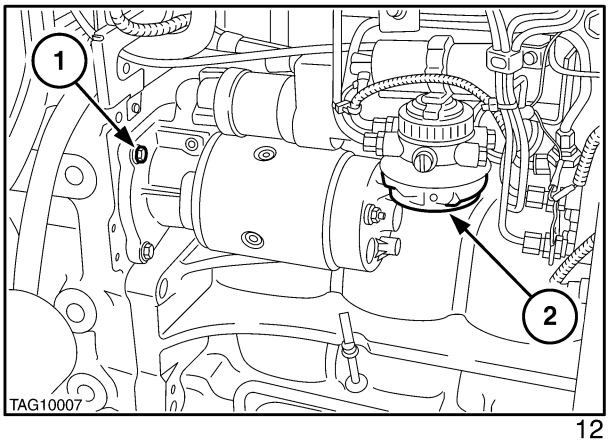

12

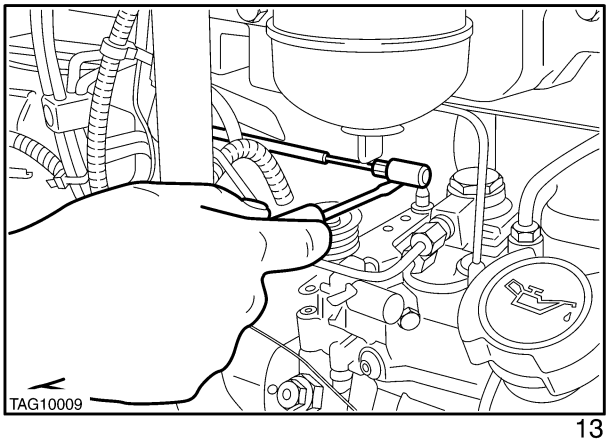

13

9. Support the engine using a suitable hoist, tool No.290740 with brackets 50075 and 50076. Remove the buckle up bolts between the engine and transmission, ensuring that all wires and tubes are disconnected. Disconnect cab main cable to engine connector Figure 14.

10. Place the engine onto a suitable stand for repair.

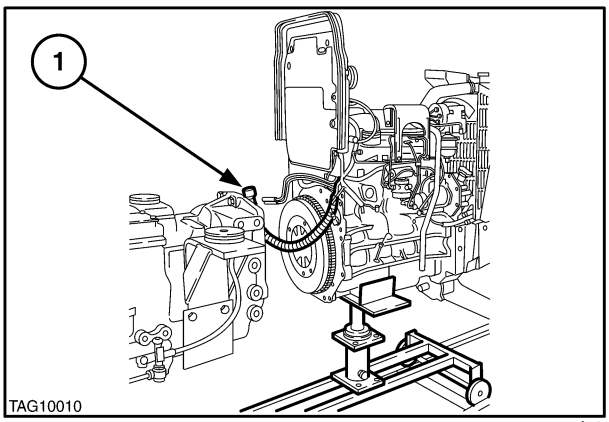

14

Engine installation

Installation of the engine is the reversal of the removal procedure, noting the following points.

- Ensure all attaching hardware is tightened to the correct torque value as detailed in the specifications.

- After connection of the battery it will be necessary to reset the radio/clock.

- Depending upon operations undertaken it may be necessary to bleed air from the fuel injection system. See Section 10, chapter 8.

- Ensure after installation that all fluid levels are correct prior to start up. Start and run the engine until correct operating temperature is achieved to purge air from cooling system. Stop engine, check for leaks, rectify as required and recheck fluid levels.

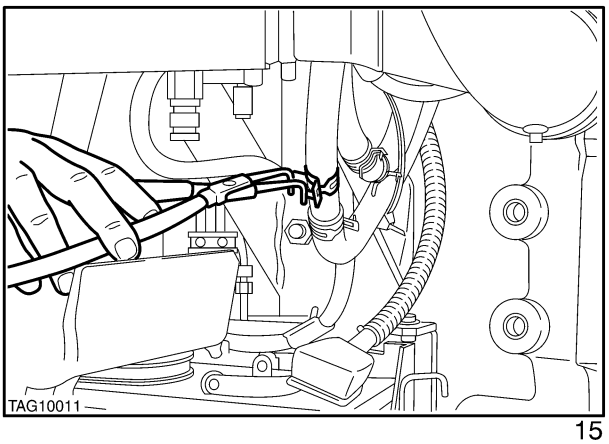

15

ENGINE DISASSEMBLY

Cylinder Head, Valves, And Related Parts

Cylinder head removal

NOTE: *The cylinder head can be removed with the engine installed in the tractor.*

Remove or disconnect the following components to allow removal of the cylinder head:–

- Remove the engine hood, side brackets and gas struts, fold back hood against cab front.

- Drain the engine coolant into a clean receptacle.

- Disconnect/remove the air cleaner, air cleaner tubes and muffler assembly.

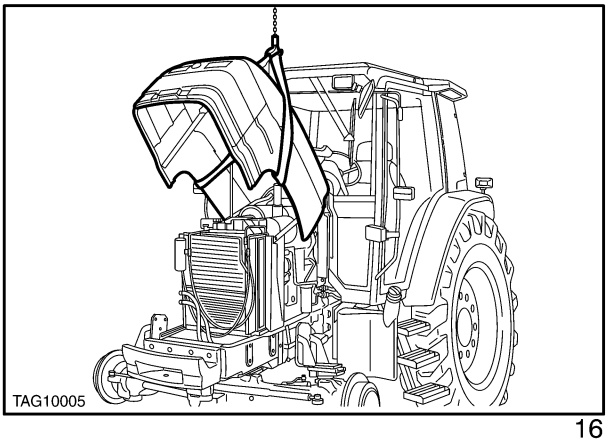

16

- Disconnect low pressure fuel lines to the filters, injector leak off tube, thermostart feed tube, ilft pump and filter(1) and (4), injector to injection pump high pressure tubes, (cap all exposed openings), and sedimentation/water separator (2).

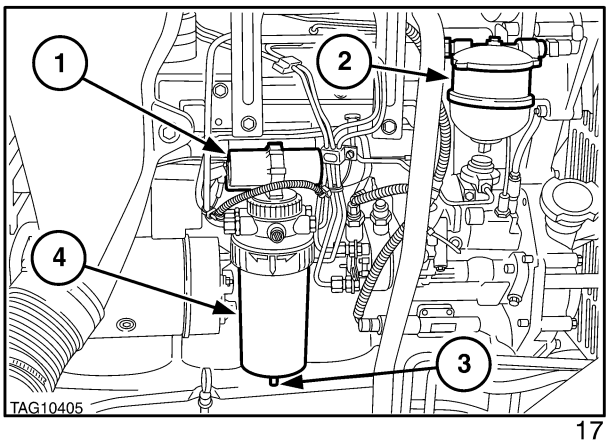

17

- Disconnect and remove the rocker cover ventilation tube.

NOTE: *Removal of the radiator will greatly assist water pump removal.*

- Remove the engine fan belt guards, the fan belt, alternator and water pump.

Clean around the injectors and remove the injector/washer assembly

NOTE: *Ensure injectors and washers have been removed prior to placing the cylinder head on to a bench as they protrude below the head face.*

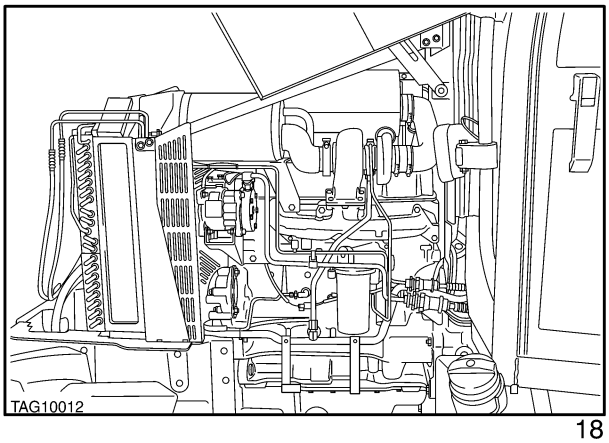

18

- Remove the turbocharger oil pipes where fitted.

- Remove the rocker cover and gasket.

- Remove the cylinder head bolts (1) which pass through the rocker shaft supports and remove the rocker shaft assembly as an assembly. Remove the push rods (2), check for concentricity and place in a numbered rack for re-assembly.

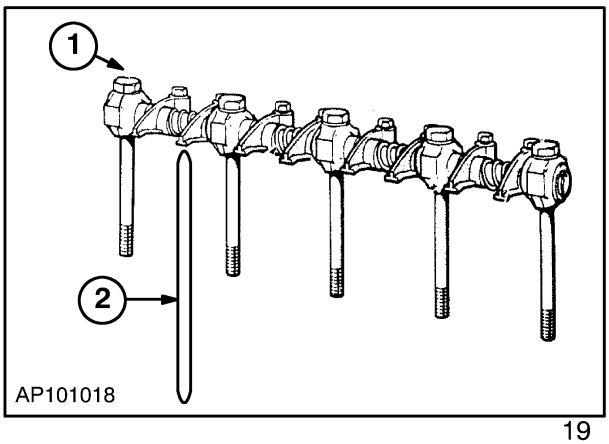

19

- Remove remaining cylinder head bolts working inwards from the end of the cylinder head, alternately to the centre of the cylinder head.

- Using a crane carefully lift the cylinder head assembly with inlet and exhaust manifold away from the engine block.

CYLINDER HEAD DISASSEMBLY

Rocker Shaft Disassembly

NOTE: *Leave bolts (1), Figure 19 in the rocker shaft supports during removal as they retain the support on the shaft (5).*

1. Remove the cylinder head bolts (3) and withdraw the supports (2), springs (1), rockers (4) and spacers (6).

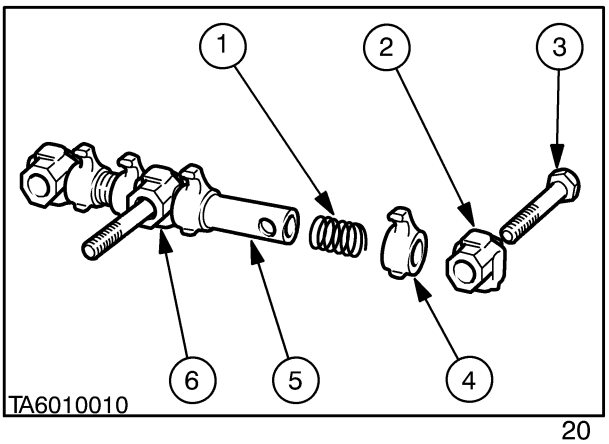

20

Valve and Spring Assembly Removal

2. Using a valve spring compressor (1) remove the retainer locks (2), springs (3), seals, rotators and place in a numbered rack.

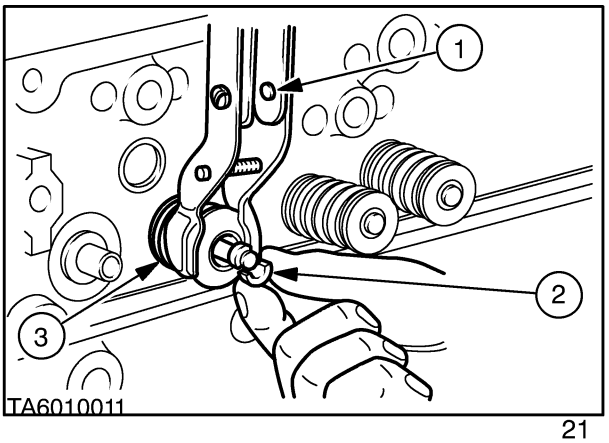

21

NOTE: *The exhaust valves are fitted with inner (1) and outer (2) rotators*

Inspection and Repair, Cylinder Head

IMPORTANT: *Before cleaning the cylinder head inspect for signs of discolouration, leaking or cracks, once cleaned concerns may not be apparent.*

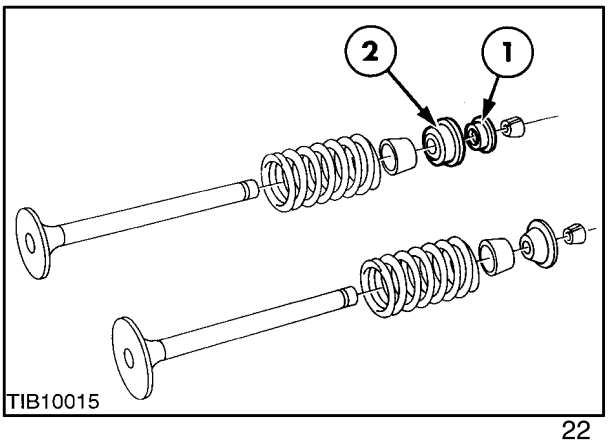

22

1. Clean the cylinder head, and remove carbon deposits from around the valve heads.

2. Cylinder head core plugs if discoloured (rusty), or leaking will require changing. Before fitting new plugs remove all old sealer from the cylinder head. Apply sealant (82995772), refer to 'Specifications', to the new plug mating faces, and drive the new plugs into location, .

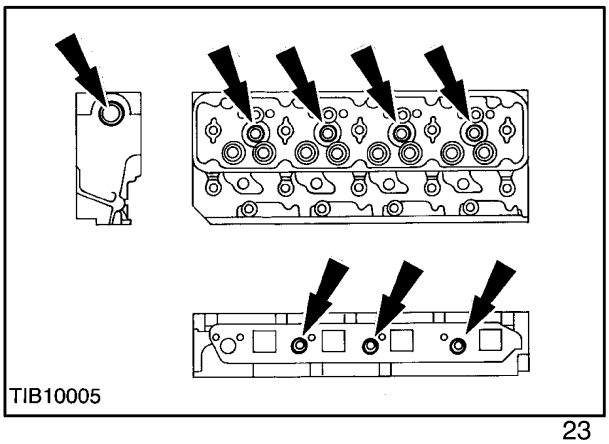

23

Core plugs required in the Cylinder Head:-

4 off, In the top of the cylinder head
1 off, in the rear of the cylinder head.
3 off, are mounted in the intake face.

3. Scrape all gasket surfaces clean and wash cylinder head in a suitable solvent, also cleaning valve guide bores.

4. Inspect cylinder head for nicks and burrs on mating face, Remove using a suitable abrasive and ensure faces are clean after repair.

5. Using a straight edge, and feeler gauge, check flatness of cylinder head in all directions does not exceed,
0.03mm (0.001 in) in any 25.4mm (1 in), or
0.127mm (0.005 in), overall limit.

6. If the cylinder head has been resurfaced, determine all head bolt faces will seat. By placing the cylinder head less gasket, on the cylinder block and installing bolts hand tight.

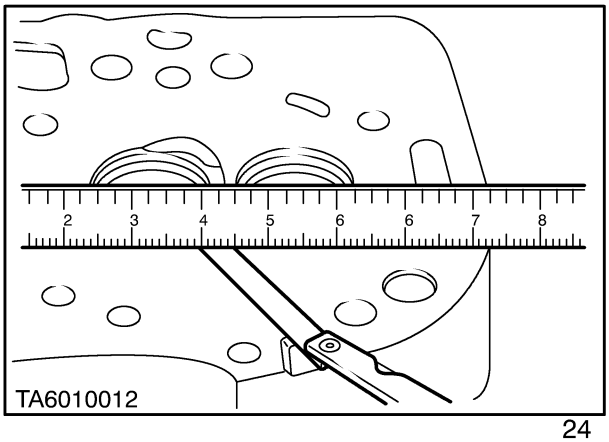

24

7. Ensure rocker shaft supports are fitted with long bolts (1). Using a feeler gauge (2), check clearance between underside of bolt heads and cylinder head or rocker shaft support.

8. If a 0.25mm (0.010 in) feeler gauge can be inserted under the bolt head the bolt has bottomed. Therefore the cylinder block thread must be increased using a 9/16-13 UNC-2A Thread tap. Identify the bolt heads and ensure they are reinstalled in the bolt holes they were checked in.

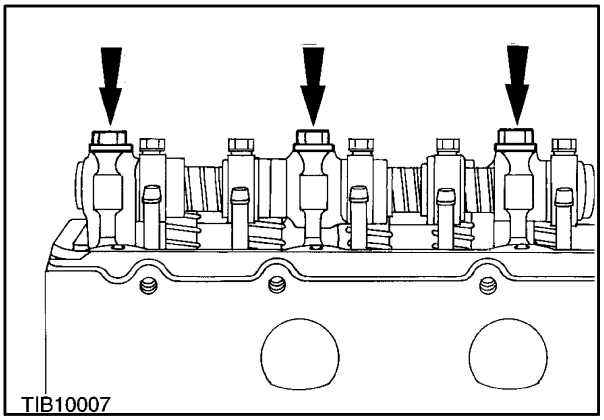

25

Valve Inserts

Insert Oversize	Counter Bore in Cylinder Head	
	Exhaust valve insert	Intake valve insert
0.25mm (0.010 in)	44.17-44.20mm (1.739-1.740 in)	50.01-50.04mm (1.969-1.970 in)
0.58mm (0.020 in)	44.42-44.45mm (1.749-1.750 in)	50.27-50.29mm (1.979-1.980 in)
0.76mm (0.030 in)	44.68-44.70mm (1.759-1.760 in)	50.52-50.55mm (1.989-1.990 in)

NOTE: *Refacing the valve seat should always be co-ordinated with refacing of the valve to ensure a compression tight fit.*

1. Examine the valve seat inserts and reface if pitted, renew if loose or damaged.

2.. To install a new valve insert, the cylinder head must be counter bored, as described in the above chart. The new insert must be chilled in dry ice prior to installation.

Valve Seat Specifications.
Valve seat angle (1),
Intake =30.0°-30.30°
Exhaust =45.0°-45.30°

Valve seat width (2),
Intake =1.9-2.4mm (0.078-0.098 in)
Exhaust =1.8-2.3mm (0.072-0.092 in)

Valve Head Face to Cylinder Head Face Depth (3),

Intake =0.86-1.32mm (0.034-0.052 in)
Exhaust =1.2-1.6mm (0.047-0.065 in)

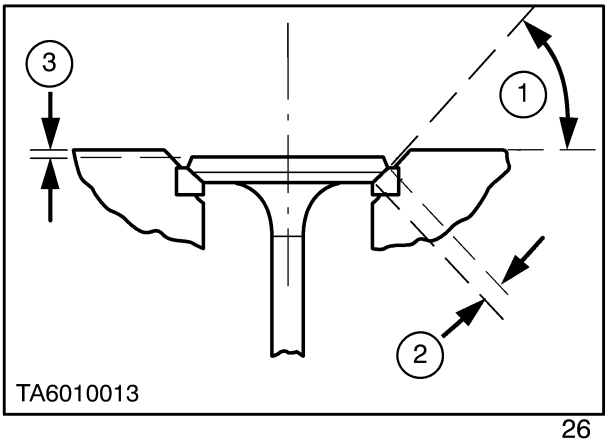

26

NOTE: *Valve inserts of 0.25mm (0.010 in) and 0.5mm (0.020 in) oversize on diameter are sometimes installed during manufacture. Cylinder Heads with oversize inserts are stamped SO15OS, SO20OS, on the exhaust manifold side in line with the valve seat concerned.*

3. Check the width of the valve seat inserts, and as required reface by grinding.

4.. Measure the concentricity of valve seats, using a dial indicator and measure concentricity of seat to the valve guide bore.
Total Indicator Reading should not exceed 0.051mm (0.002 in).

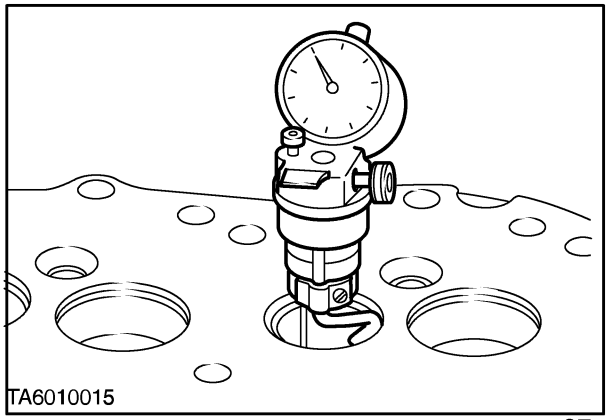

27

5. Use a seat cutter to correct any seat eccentricity, or clean up of pits and grooves. Ensure after any rework that seat width is within specified limits.
6. Rotate a new or refaced valve in the seat using engineering blue, ensure all the blue is transferred to the valve head protrusion, If any blue remains below or around the seat raise or lower the seat accordingly, in the following manner.

Lower, the valve seats, by removing material from the top of seat (1) by using:-
30° grinding wheel for, Exhaust valves and a 15° grinding wheel for, Intake valves.

Raise, the valve seats, by removing material from the bottom of seat (2) by using:-
60° grinding wheel for, Exhaust valves and a 45° grinding wheel for, Intake valves.

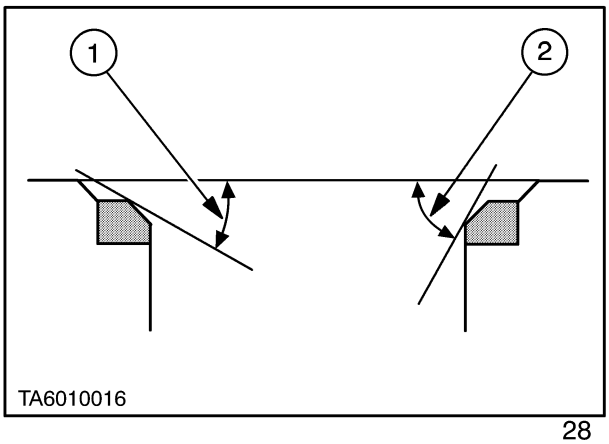

28

Valve Guides

1. Using a telescopic gauge (1), and micrometer (2), measure the valve guide bore clearance, and ensure it does not exceed,
0.023-0.069mm (0.0009-0.0027 in),
on the intake valve stem,
0.048-0.094mm (0.0019-0.0037 in),
on the exhaust valve stem.

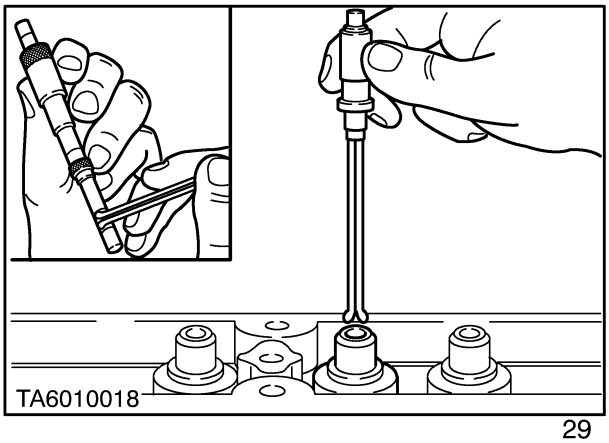

29

NOTE: *Production cylinder heads may have one or more machined, oversize valve guide bores, or valves installed, 0.38mm (0.015 in). Such cylinder heads have 15 or VO15OS stamped on the cylinder head exhaust manifold side adjacent to the valve concerned.*

2. Using a suitable reamer, ream out the valve stem guide, with three reamer and pilot combinations as follows:-

3. When going from a standard valve stem to an oversize, always use reamers in sequence.

0.076mm (0.003 in) oversize reamer, and standard diameter pilot.

0.38mm (0.015 in) oversize reamer, and 0.076mm (0.003 in) oversize pilot.

0.76mm (0.030 in) oversize reamer, and 0.38mm (0.015 in) oversize pilot.

Valve Springs

1. Checked on a flat surface squareness, should not exceed 1.52mm (0.060 in), between the square, and spring at the top edge.

Length of valve springs should be checked on both free length, and loaded length.

Free length = 60.7mm (2.39 in)

Installed length = 47.2-49.6mm (1.86-1.95 in)

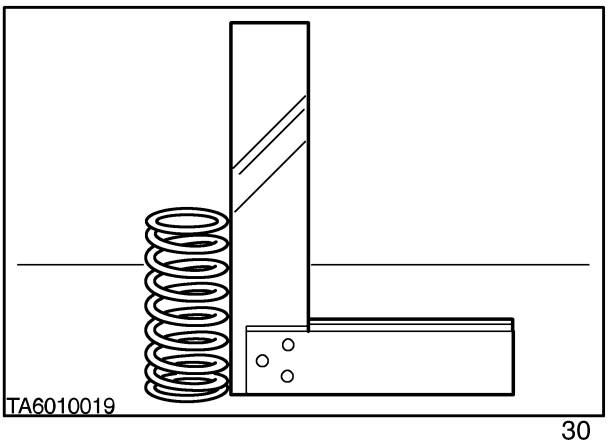

30

Loaded length = 48.26mm (1.9 in) using a weight of 28-31 kg (61-69 lb)

Loaded length = 35.69mm (1.4 in) using a weight of 61-69 kg (135-153 lb)

Ensure the valve spring retainer locks are in good condition, and replace if worn or damaged.

Rocker Shaft Inspection and Re-assembly

1. Inspect rocker arm adjusting screws, and push rod ends of the rocker arm, including the ball end of the screws for nicks, damage, or excess wear.
2. Also inspect the inside diameter of the rocker arm for damage or wear. If any of these characteristics are not to specification replace with new parts.
3. Check the ends of the push rods for damage or wear. If not to specification or push rods were found not to be straight during dismantling install new rods.

NOTE: *Do not attempt to straighten bent push rods, replace with new.*

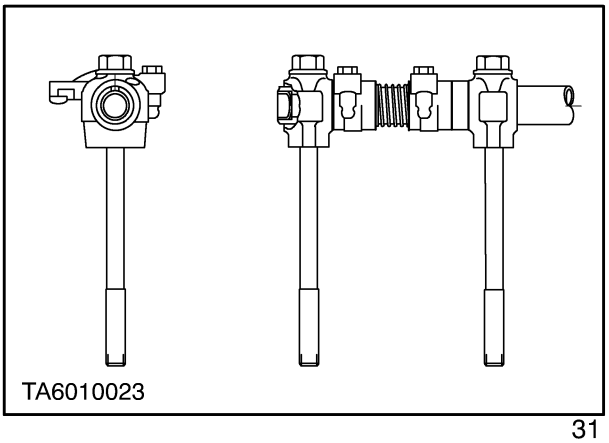

31

4. Check the rocker shaft for signs of wear or damage, on internal and external diameters respectively. If not to specification replace with new. If re-used, before re-assembly clean thoroughly in solvent making sure all oil passages are clear.
5. Position the shaft identification groove, Figure 33, forwards and upwards. This ensures oil grooves and holes face downwards.
6. Assemble rocker shaft support with long head bolts, ensuring springs and spacers are re-assembled and torque to 217 Nm (160 lbf ft).

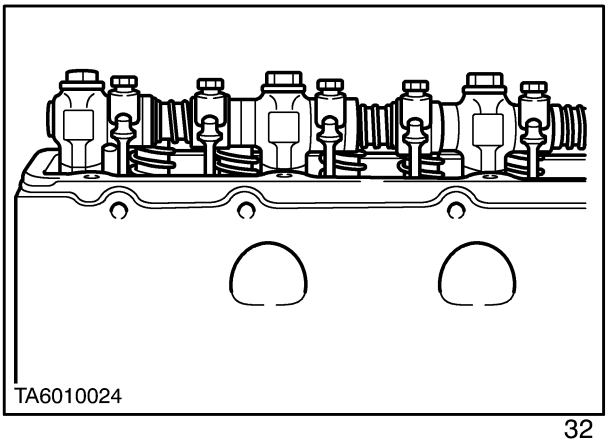

32

CYLINDER HEAD RE-ASSEMBLY

1. Insert the valves into the guide bores from which they were removed and lap with a suitable paste, ensure all traces of paste are removed after lapping.

2. Lubricate all components with clean engine oil on re-assembly. Use a spring compressor to reassemble the valves, valve springs, rotators, and collets, with new umbrella seals.

NOTE: *Exhaust valves are fitted with inner (1) and outer (2) rotators, Figure 32*

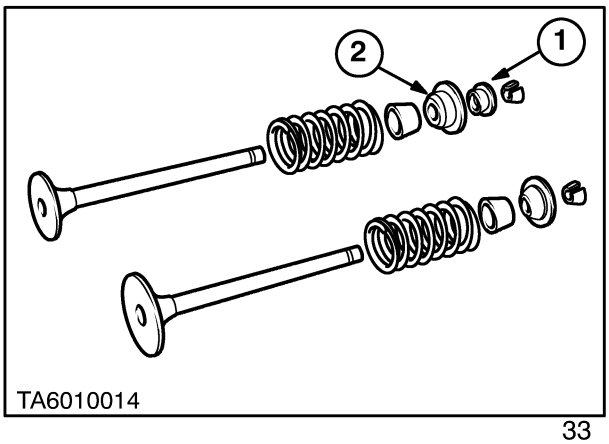

33

3. Coat all components with clean engine oil prior to assembly, and insert each push rod into its original position, ensuring each ball end is seated in its cam follower.

CYLINDER HEAD INSTALLATION

Installation of the cylinder head assembly and components is the reverse of the removal procedure, observing the following,

1. Install new cylinder head, intake and exhaust manifold gaskets.

NOTE: *Ensure exhaust manifold gasket is fitted correctly to suit profile of exhaust ports.*

2. Tighten the cylinder head bolts in sequence from the centre of the head, progressively in three stages.

Stage 1, 156 Nm (115 lbf ft) 15.6 kgf m

Stage 2, 190 Nm (140 lbf ft) 19.3 kgf m

Stage 3, 217 Nm (160 lbf ft) 22.0 kgf m

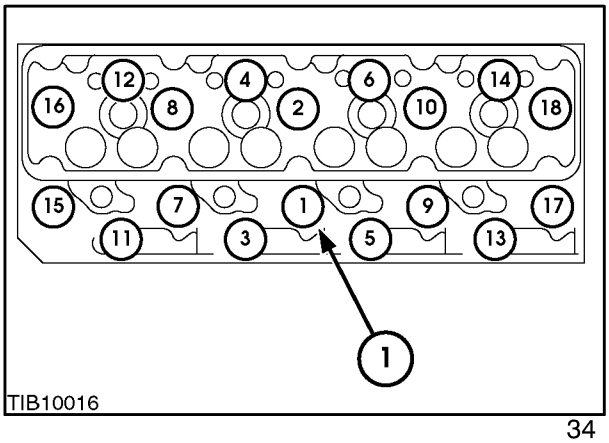

34

NOTE: *Bolts to be lubricated prior to assembly, and should be tightened to torque specification, with the engine cold.*

3. Adjust valve lash setting with each piston in turn at Top Dead Centre, and rockers free to move, by adjusting the rocker bolt.

Intake Valve Lash,
0.36-0.46mm (0.014-0.018 in).

Exhaust Valve Lash,
0.43-0.53mm (0.017-0.021 in).

NOTE: *Valve lash is to be set, only when the engine is cold.*

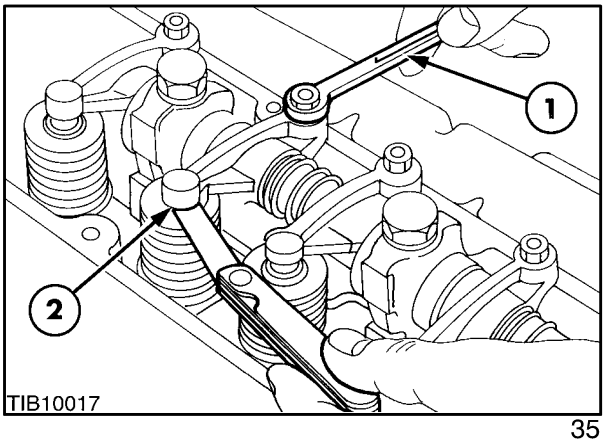

35

4. Install the injectors with new seat washers, cork seals, and torque to 23Nm (17 lbf ft).

5. Install the injector lines, and leak off pipes with new washers, and torque the leak off banjo bolts to, 10Nm (8 lbf ft).

NOTE: *Hold the leak off plastic tubing when tightening to prevent the pipes pivoting, during torque up.*

6. Exhaust manifold bolts are to be refitted and tightened to a torque of, 38Nm (28 lbf ft).

7. Refit intake manifold bolts and tightened to a torque of, 38Nm (28 lbf ft).

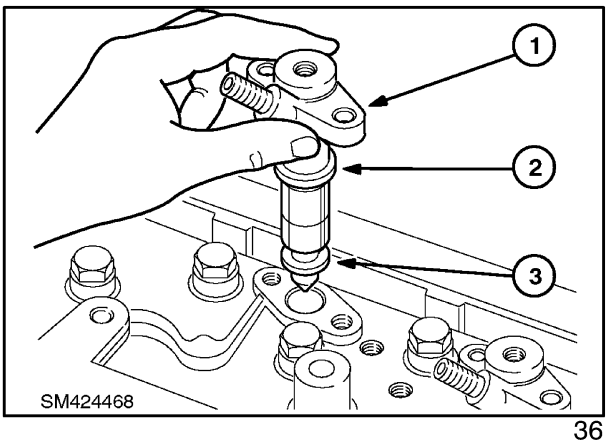

36

ENGINE FRONT COVER AND TIMING GEAR REMOVAL

NOTE: *Timing cover and gears can only be serviced after removing the radiator.*

1. Remove the fan belt and withdraw the bolt and washer, from the crankshaft pulley.

2. Using puller, No.518 or FT.9539, and shaft protector No 625-A or 9212, remove pulley, spacer and O-ring from the shaft.

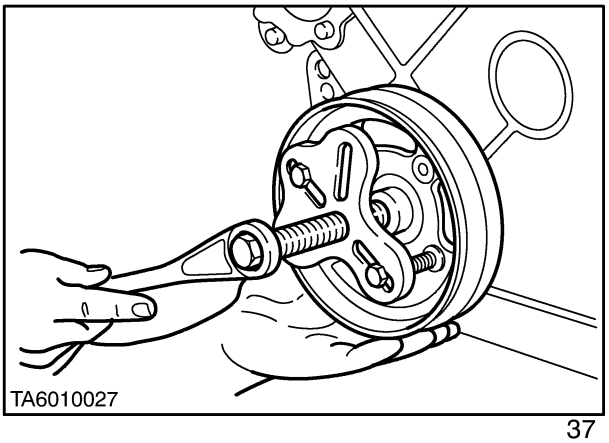

37

3. Withdraw the bolts retaining the front cover plate, and remove the front plate.

IMPORTANT: *The crankshaft timing gear must not be removed. The gear is heat shrunk on to the crankshaft and aligned to the crankshaft No1 pin, to within 0.10mm (0.004 in). If the gear is damaged a new crankshaft is required.*

4. Before removing the timing gears, use a dial indicator or feeler gauge, to measure the backlash between each set of gears.

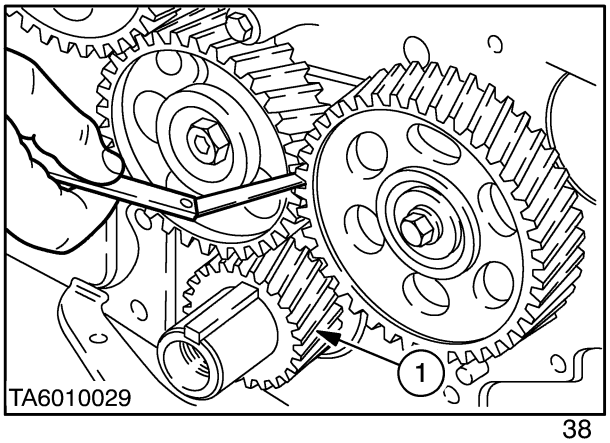

38

5. Rotate the gears and check the backlash, using a feeler gauge, or dial indicator at four equal points on the gears. Renew if the backlash exceeds the following.

Backlash to camshaft gear (1),
0.15-0.46mm (0.006-0.018 in)

Backlash to crankshaft gear (2),
0.15-0.46mm (0.006-0.018 in)

Backlash to fuel injection pump gear(3),
0.10-0.15mm (0.004-0.006 in)

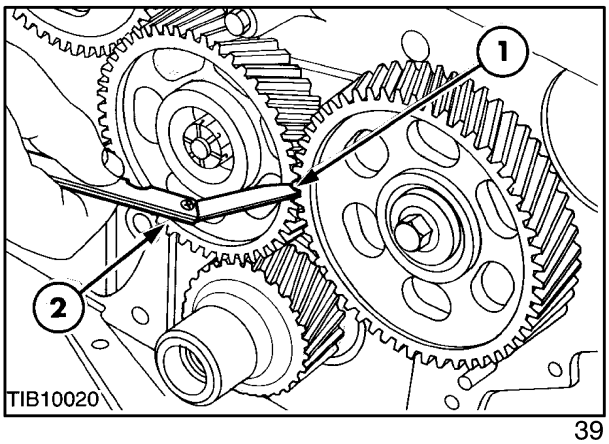

39

CAMSHAFT DRIVE GEAR

1. Pry the camshaft gear using a lever (1), away from thrust plate. Using a dial indicator or feeler gauge (2), check the clearance, if outside of 0.076-0.35mm (0.002-0.007 in) limit, fit a new camshaft thrust plate.

2. Remove the camshaft idler gear retaining bolt, gear, and adaptor from the block, then remove the camshaft gear bolt and disassemble.

3. Remove retaining nut, and washer from the fuel pump and remove the gear from the shaft using a puller.

4. If required the timing gear rear cover may now be removed. Remove the six retaining bolts and carefully pry the cover from the engine block.

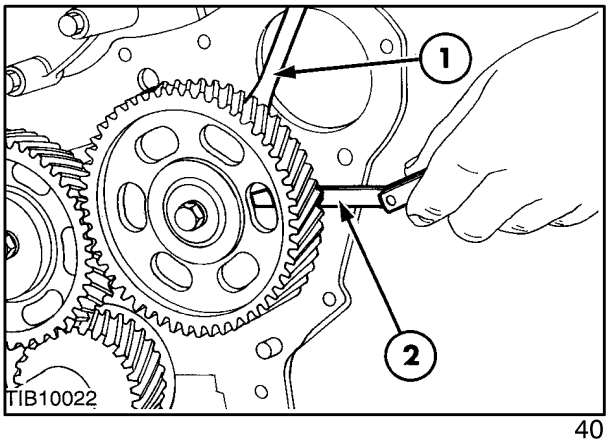

40

Inspection and repair of gears

5. Wash the gears using a suitable solvent, and examine gear teeth for wear, burrs, or scratches. Minor marks can be removed using a fine abrasive, thoroughly clean before re-assembly.

6. Ensure the camshaft idler gear adaptor is free from obstruction and bushing is not damaged. Camshaft key and key-way should be checked for damage and repaired as required.

Installation

1. Position piston no.1 at Top Dead Centre, set using flywheel timing marks, install the camshaft gear, and tighten bolt to 69 Nm (51 lbf ft) 7.0 kgf m.

2. Install the camshaft idler gear to the block, aligning the timing marks to the crankshaft and camshaft gears and torque to 250 Nm (184lbf ft).

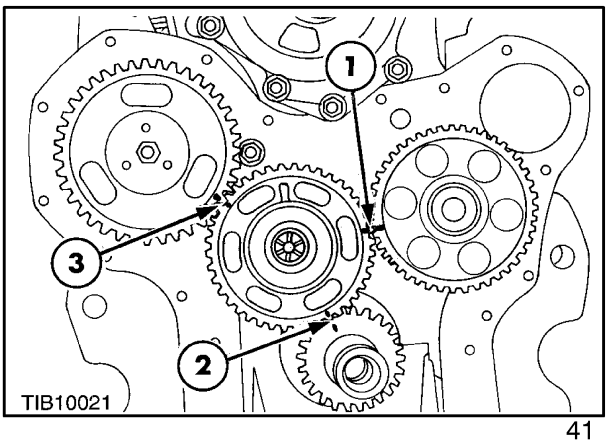

41

DPS – Non Emissionised Engine

3. With piston No1 at Top Dead Centre, assemble the fuel injection pump with a new 'O' ring, aligning the mark on pump flange to the timing mark on the front cover to 0°. Torque pump retaining bolts to 22 Nm (18 lbf ft) 2.2 kgf m. Install the pump gear over the pump shaft. Align timing marks to the idler gear and torque to pump shaft 79 Nm (58 lbf ft). Holding the idler gear, check the backlash between the pump and idler gear with a feeler gauge or dial indicator.

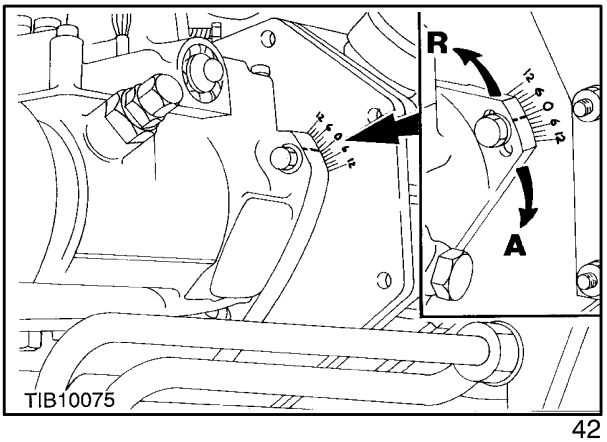

42

DP200 – Emissionised Engine

NOTE: *Emissionised Engine and fuel pump, correct timing procedure must be followed.*

With engine at 28° BTDC compression stroke, set using flywheel timing marks, assemble the 'LOCKED' (2) Figure 44 pre-timed fuel enjection pump with a new 'O' ring,, to the front cover. Torque pump retaining bolts to 24 Nm (18 lbf ft). Install the pump gear over the pump shaft. Asemble the washer and nut to the shaft, leaving loose at this stage to allow the gear to rotate freely on the pump shaft.

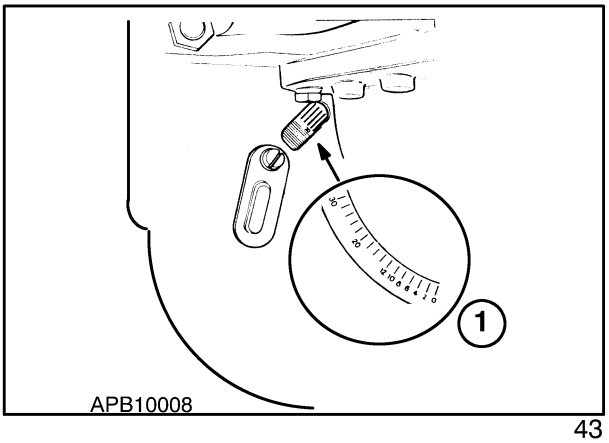

43

NOTE: *DO NOT TIGHTEN THE INJECTION PUMP SHAFT NUT AT THIS STAGE. PROCEED TO REASSEMBLE THE FRONT COVER.*

4. Initially tighten the injection pump gear nut to a torque of 9Nm, (6.7 lbf.ft.) while holding the gear in a counter clockwise position to remove backlash from gears. 'UNLOCK' the pump by releasing the locking bolt and installing the spacer between the pump body and bolt head (1), Figure 44 . The pump gear retaining nut can now be fully tightened to a torque value of 81 Nm, (60 lbf.ft.)

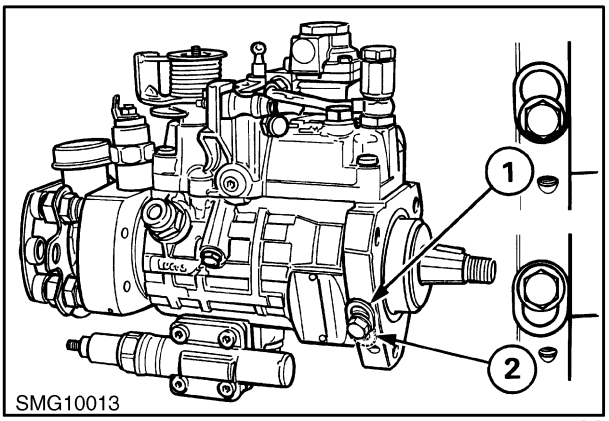

44

5. The front oil seal should be replaced, every time the front plate is removed. Drive out the old seal using a punch, taking care not to damage the front plate. Assemble the front too Engine as described below and then install the seal

6. Ensure the front cover mating face and cylinder block face are thoroughly clean before re-assembly. Apply a 2mm (0.078in) wide bead of sealer 82995774 along the centre of each mating face. Position a new gasket on the front cover.

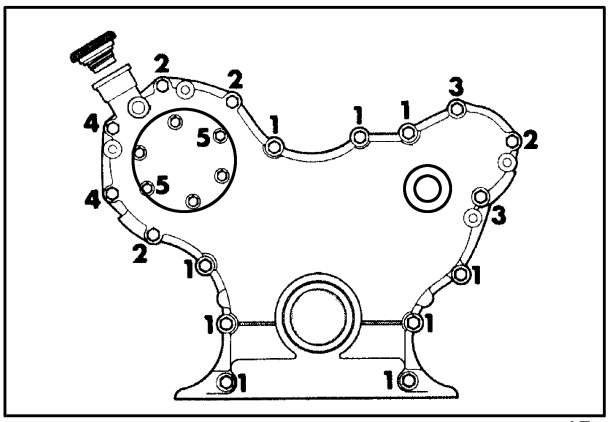

45

7. Install the front cover ensuring alignment with dowel pins and tighten the bolts in order of sequence, Figure 45.

5/16 in-18 UNC bolts tighten to 18-24 Nm (13-18 lbf ft).

3/8 in-16 UNC bolts tighten to 34-41 Nm (25-30 lbf ft).

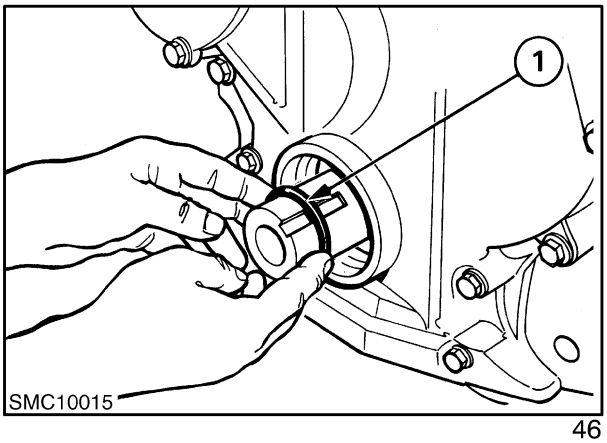

46

Seal Installation

8. Clean all parts and install new 'O' ring, Figure 46.

9. Lubricate seal (1) and push onto the seal installer, (3). Special tool NH. 10-103

10. Press seal into front cover using tool NH10-103. Install the seal sleeve into the seal.

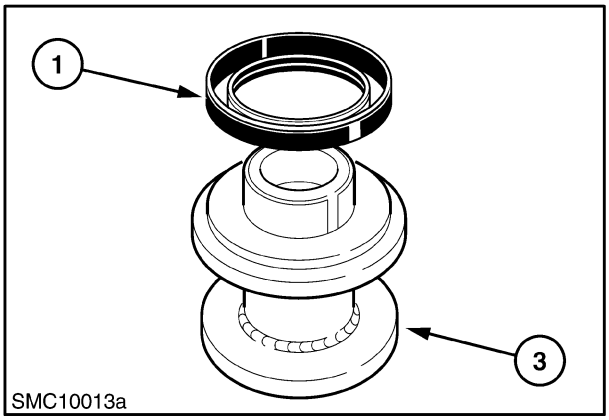

47

11. Install the Access cover for the injection pump gear nut. Clean surfaces and apply a 3mm bead of flexible gasket sealant. tighten the retaining bolts to 37 Nm (28 lfbf.ft.)

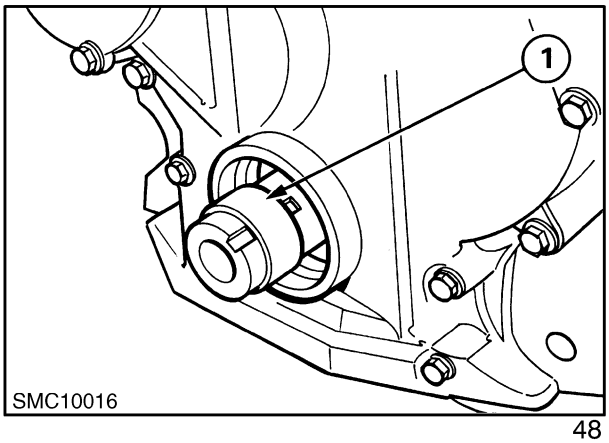

48

OIL PAN REMOVAL

1. Drain engine oil through oil pan plug (1) and into a suitable clean receptacle and remove oil level indicator.

NOTE: *To facilitate the oil pan (2) removal it may be necessary to first remove the propshaft.*

2. Remove oil pan bolts and lower to ground.

Inspection and repair

1. Clean gasket material from sump face, clean sump in a suitable solvent, inspect sump for cracks damaged threads or damaged sump face.

Installation

1. Installation is the reverse of removal but with the following requirements.
2. Ensure block face is clean and free of gasket material. Install a new gasket to the front cover, and oil pan. Ensure sealer 82995774 is applied to the front plate, and rear oil seal return joints.
3. Position the oil pan and install a bolt at each corner finger tight to hold in position, install remaining bolts, and torque from the centre of the pan to the end to 38 Nm (28 lbf ft) 3.9 kgf m.

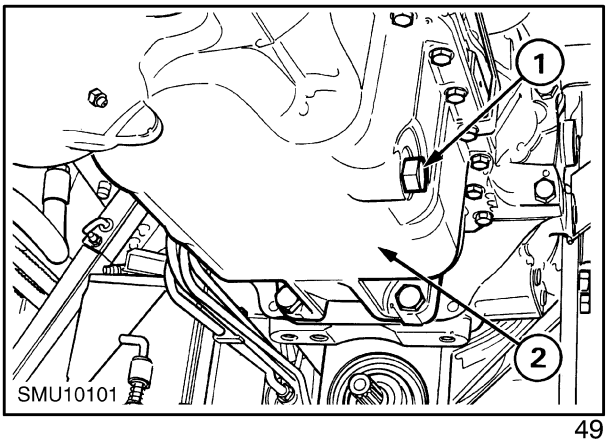

49

CONNECTING RODS, BEARINGS, PISTONS, AND RINGS, REMOVAL.

NOTE: *The connecting rods and pistons can be removed with the engine installed after removal of the cylinder head and oil pan sump .*

1. With cylinder head removed clean off any ridge from the top of the cylinder bores, with a ridge remover to enable removal of the pistons, this is essential if old pistons are to be re-used as failure to do so could result in ring land damage.
2. With the piston at the bottom of the stroke remove the end cap bolts, cap, and liner. Using the handle end of a hammer push the piston assembly out through the top of the block, and remove the bearing liner from the connecting rod.

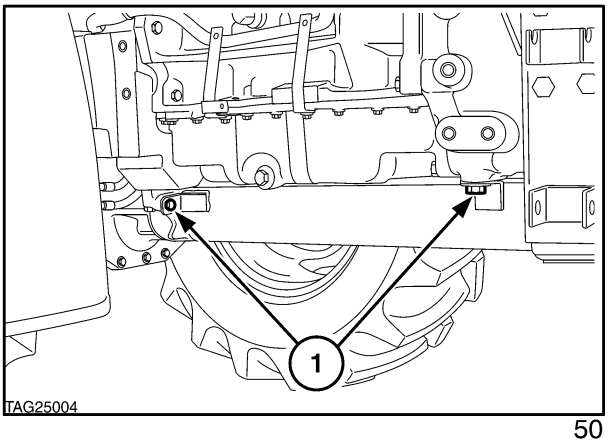

50

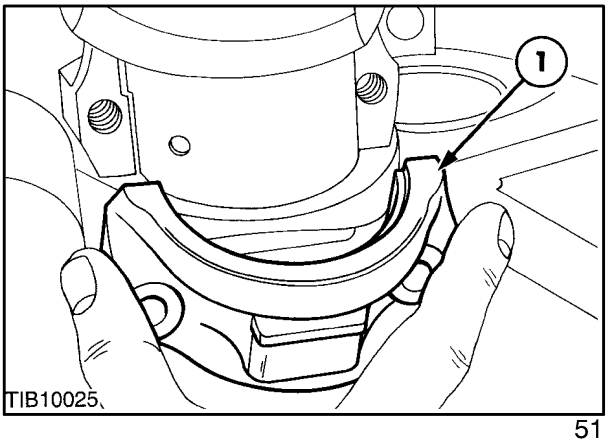

51

NOTE: *Bearing caps and liners must be kept with their respective connecting rods.*

3. Turn the crankshaft again and repeat the process for the remaining pistons.

4. Remove piston pin snap rings from each side of piston and remove pin. Using an expander, remove the piston rings.

5. Ensure each piston and rod assembly, remains matched together for re-assembly into the same location within the cylinder block.

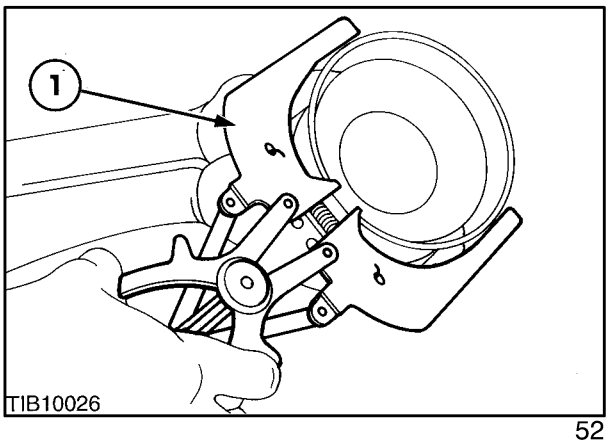

52

Inspection and Repair

1. Clean the piston, and connecting rod assembly, in a suitable solvent and inspect for damage to ring lands, skirts, or pin bosses.

2. Check connecting rod components for damage, and place in an alignment fixture to check for distortion, and ensure that any distortion, is within specification as follows.

Maximum Twist 'A' 0.30mm (0.012 in).

Maximum Bend 'B' 0.10mm (0.004 in).

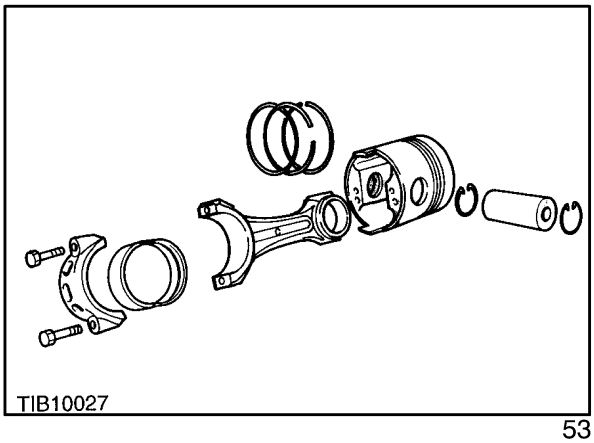

53

3. Check piston pin bushing for damage or wear in the following manner.

Measure the outside diameter of the piston pin, and inside diameter of the connecting rod bushing, to the following,

Piston Pin Outside Diameter

Naturally Aspirated,
38.095-38.100mm (1.4998-1.500 in).
Turbocharged,
41.270-41.275mm (1.6248-1.625 in).

Connecting Rod Bush internal Diameter

Naturally Aspirated,
38.113-38.120mm (1.5005-1.5008 in).
Turbocharged,
41.288-41.295mm (1.6255-1.6258 in)

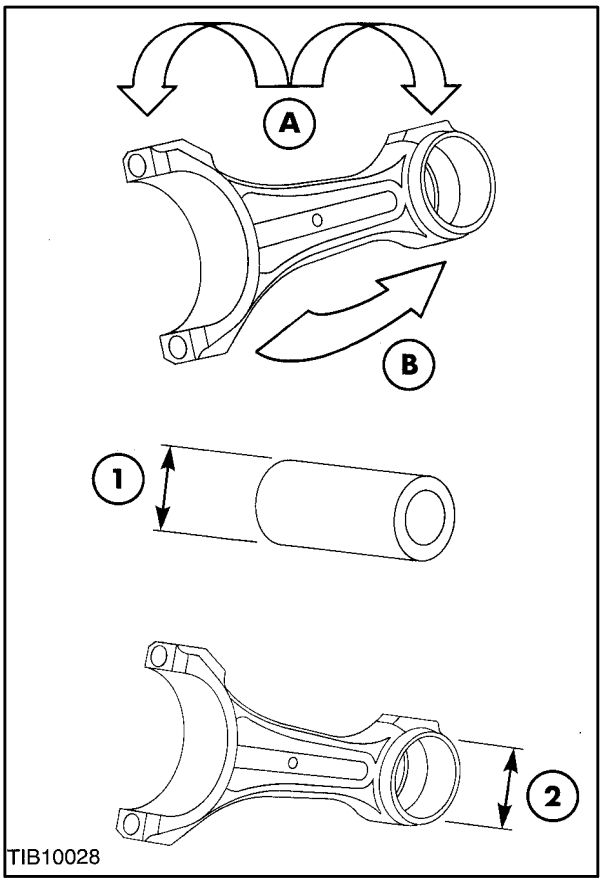

54

CONNECTING ROD BUSH

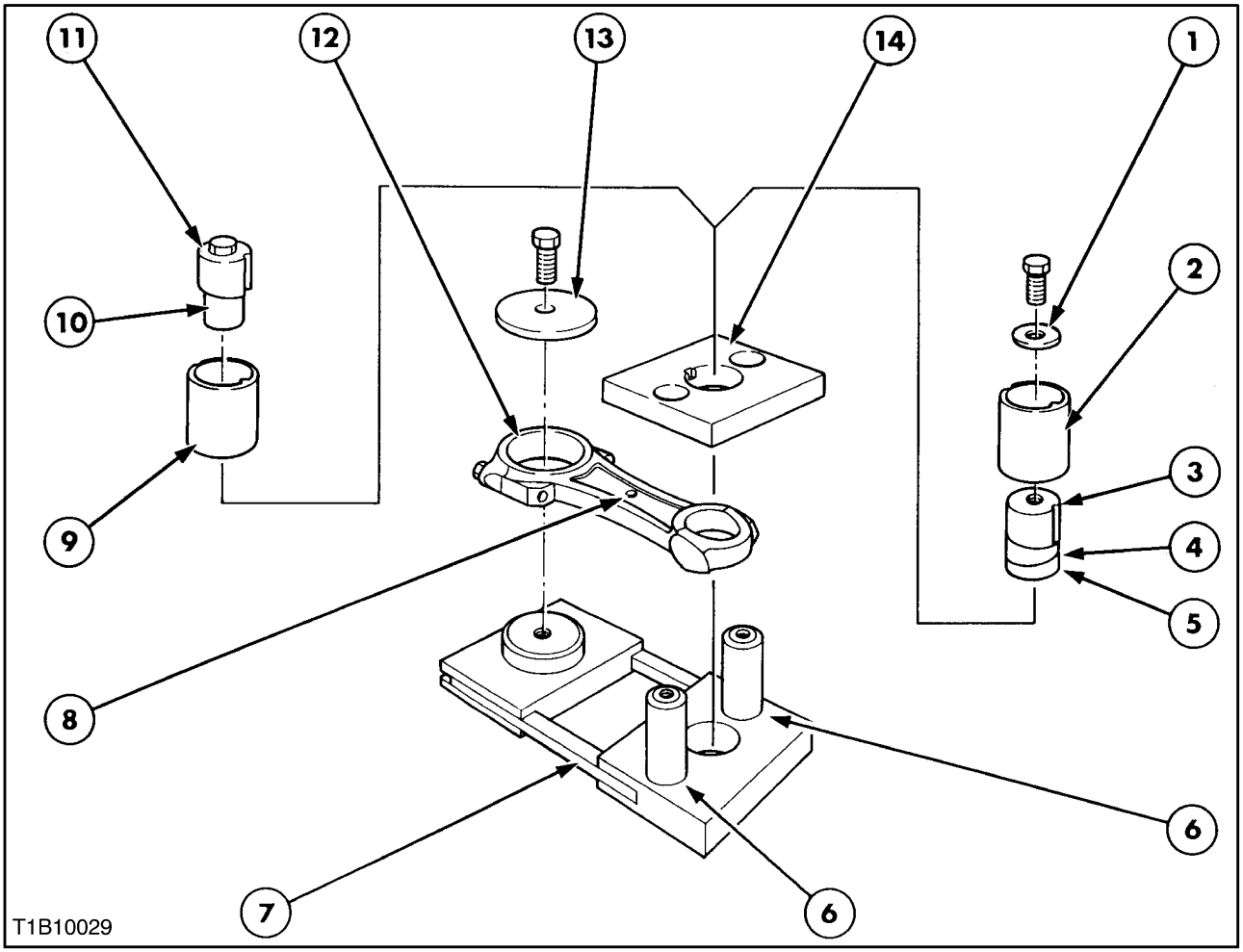

Connecting Rod Bush Installation 55

Removal

1. Washer
2. Collar
3. Installation Insert 1
4. Bush
5. Installation Insert 2
6. Pins
7. Fixture
8. Connecting Rod Facing up
9. Remover Insert 1
10. Remover Insert 2

Installation

11. Remover Insert 3
12. Connecting Rod Location
13. Washer
14. Location Plate

4. If not to specification use tool No FNH 00053, and press out the old bush using the removal fixture as shown. Press fit a new bush through the fixture using the installation detail, and into the connecting rod. After fitting a new bush ensure all sharp edges and burrs are removed.

IMPORTANT: *Ensure the split in the small end bush is at right angles to centre line of connecting rod.*

Connecting rods should only be changed as matched sets.

5. Where special tooling is not available for the removal or fitment of the connecting rod bush, a standard bush can be fitted in the following manner.

6. Place the connecting rod securely in a bench press. Manufacture from suitable bar stock, a press tool with the end face ground at an angle, to suit the connecting rod bush side face. Position the tool on the bush, and gently drive the bush from its position. It is recommended a guide is manufactured to assist alignment of the bar stock during this operation.

7. A new bush can then be fitted in a similar manner, by using a suitable piece of bar stock, with an end face machined flat to suit the standard parallel bush. Use a guide as described, and gently drive in the new bush into the connecting rod.

NOTE: *The seam of the new bush must be placed at 90° to the centre line of the connecting rod.*

8. After installation, grind the side faces of the new bush to match the side faces of the connecting rod. Ensure all sharp edges are removed, and loose chippings are cleaned from the connecting rod before re-assembly into the engine.

9. With a new bush fitted drill a hole through the top of the connecting rod using a 4.6mm (0.187 in) bit. Drill through the existing oil hole.

10. Use an expanding reamer to obtain correct bushing to piston pin clearance referring to specification section. Remove burrs, and chippings, before refitting.

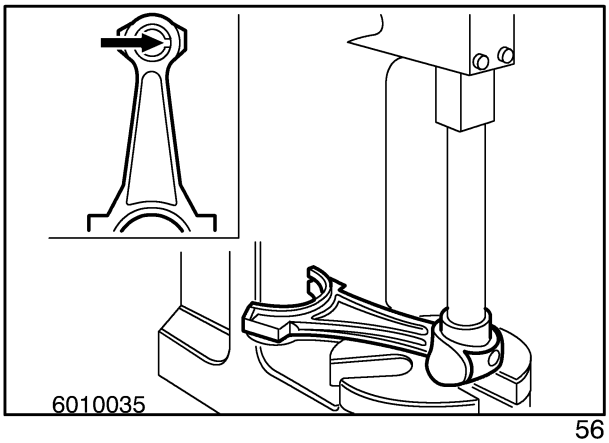

56

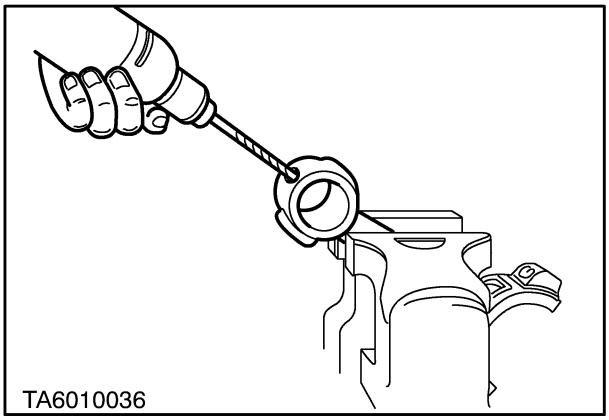

57

CYLINDER BLOCK OVERHAUL.

1. Cylinder block plugs, and senders, require changing if leaking or rusty, and must be replaced. Clean the old sealant off the block, and fit new plugs with sealer, figure 46 refers to the front and left hand side of the cylinder block.

NOTE: *New part mating faces, and threads, should be coated in sealant, refer to "Specifications". Assemble in the following manner.*

Front and left hand side of the engine block.

Plug (1) Apply sealant 82995772 and drive in to block.

Plug (2) Apply sealant 82995768 and torque to 8-14 Nm (6-10 lbf ft).

Fitting (3) Apply sealant 82995768 and torque to 24-34 Nm (18-25 lbf ft).

Plug (4) Apply sealant 82995768 and torque to 68-95 Nm (50-70 lbf ft).

Fitting (5) Apply sealant 82995768 and torque to 24-34 Nm (18-25 lbf ft).

Plug (6) Apply sealant 82995768 and torque to 27-47 Nm (20-35 lbf ft).

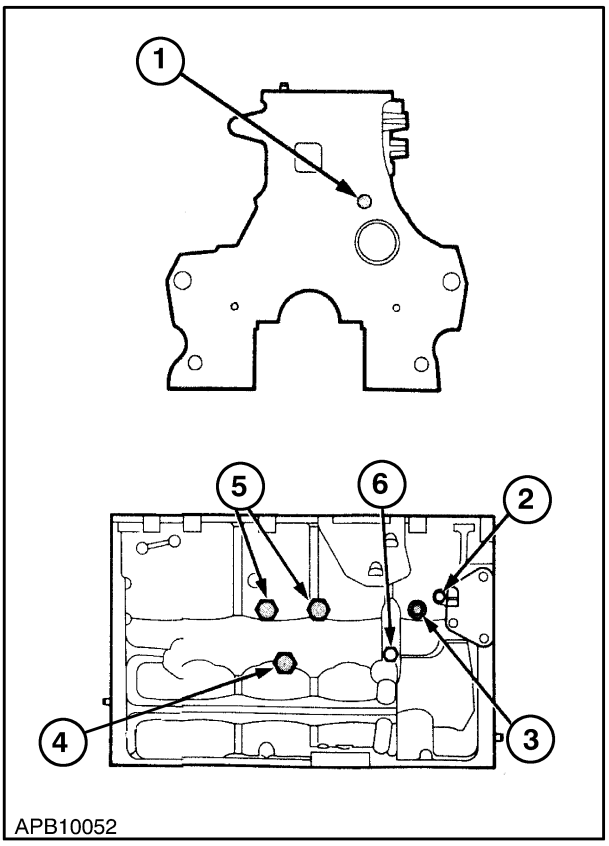

APB10052

58

Rear and right hand side of the engine block.

Plug (1) Apply sealant 82995772 and drive in to block.

Oil Jets (2) replace with new if damaged, apply engine oil only on re-assembly "Do not use sealant"**.**

Fitting (3) Apply sealant 82995768 and torque to 8-14 Nm (6-10 lbf ft).

Plug (4) Apply sealant 82995768 and torque to 54-81 Nm (40-60 lbf ft)

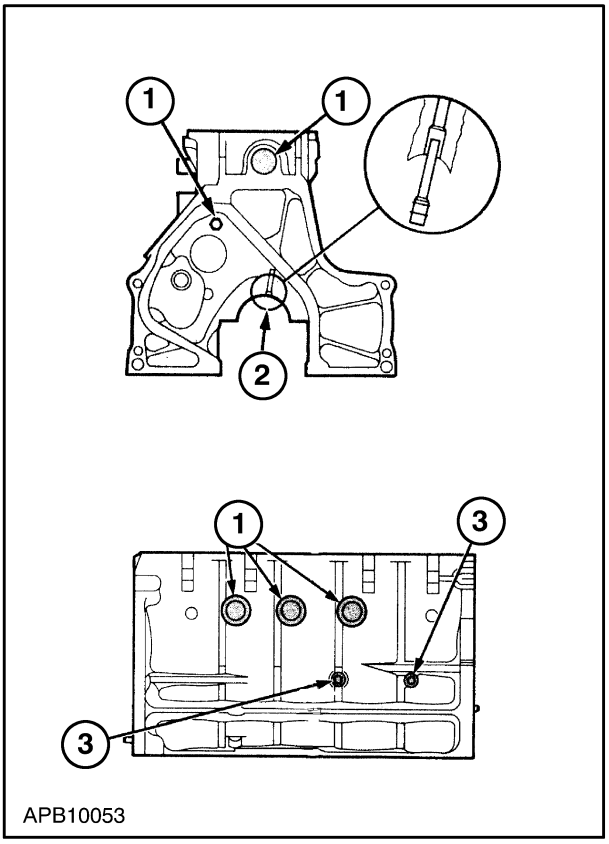

APB10053

59

CYLINDER BORE

1. Check the cylinder bore for scuffing or rings around the ring travel area. Irregularities can be felt by running a finger over the surface. To check ovality, wear, or taper, use a telescopic gauge.

Measure lengthwise,
A, to B, and C, to D, and compare dimensions. Variances between the readings will indicate "taper".

Measure crosswise,
C, to D, and compare dimensions lengthwise. A, to B. Variances will indicate ovality.

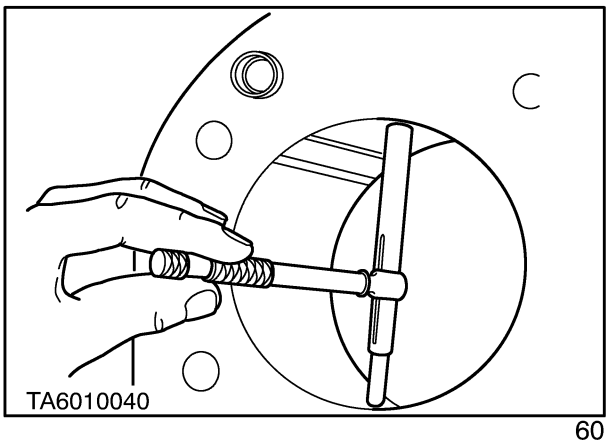

60

NOTE: *'Repair Limit' refers to the tolerance allowed after a repair has been performed. The 'Wear Limit' is the tolerance prior to repair.*

Taper of cylinder bore,
repair limit-0.025mm (0.001 in)
wear limit -0.127mm (0.005 in)

Cylinder bore out of round,
repair limit-0.03mm (0.0015 in)
wear limit-0.127mm (0.005 in)

Cylinder bore diameter,
111.778-111.841mm (4.4007-4.4032 in).

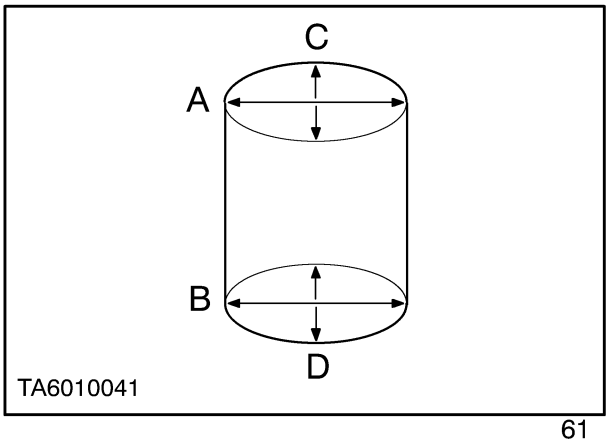

61

2. Where only minor imperfections exist and bores are to specification, hone the bores prior to installing new piston rings, provided piston to bore clearance, is less than 0.250mm (0.011 in)

3. Sleeving of the cylinder bores becomes expedient when.

   - Cylinder bore is beyond specification limits.
   - Replacing sleeves already installed in service.

SLEEVING - BORING AND HONING

1. Measure the outside diameter of the sleeve in several places, and average the dimension. Counter bore the cylinder block (see step 2) using the average dimension to obtain a press fit, between bore and sleeve. Interference of sleeve to the cylinder bore is to be: 0.025-0.076mm (0.001-0.003 in).

2. Counter bore (1), Figure 57, to a depth of 204.7mm (8.06 in), from the block face, surface finish of the bore is not to exceed (80 microns). Leave a step at the bottom of the bore a minimum of 9.60-10.16mm (0.38-0.400 in), allowing for run out of chamfers.

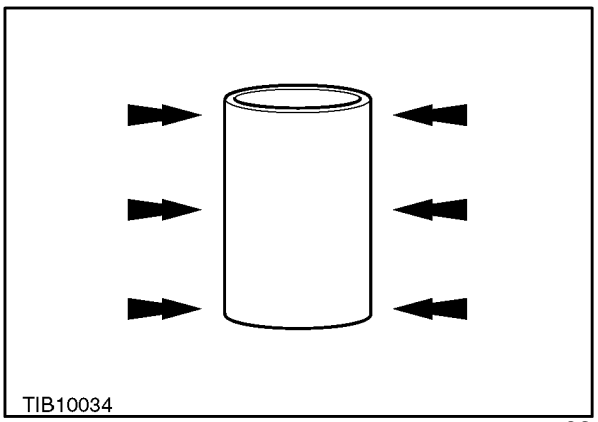

62

3. Bore through diameter, to the diameter of, 113.13-113.18mm (4.454-4.456in).

4. Clean the cylinder bores and thoroughly dry.

5. Grease the sleeve with Ambra GR75MD NH720A or similar, and press the sleeve home to the lip in the bore. The top of the sleeve should protrude through the top of the block, 0.127-1.0mm (0.005-0.040in).

6. Bore the sleeve to,
111.7-111.76mm (4.3985-4.400in).

7. Skim the block face, and top of sleeves, to achieve the specified flatness of,
0.08mm (0.003 in) in any 6 in (152mm)
0.001 in (0.03mm) in any 1 in (25.4mm).
A chamfer in the internal diameter at the top of the sleeve to 45°x0.020 in (0.5mm) should be maintained, to prevent piston damage on re-assembly.

8. Break the sharp edge at the bottom of the sleeve prior to honing.

9. Hone the cylinder bore to give the correct cylinder to bore clearance as described on page 2-42.

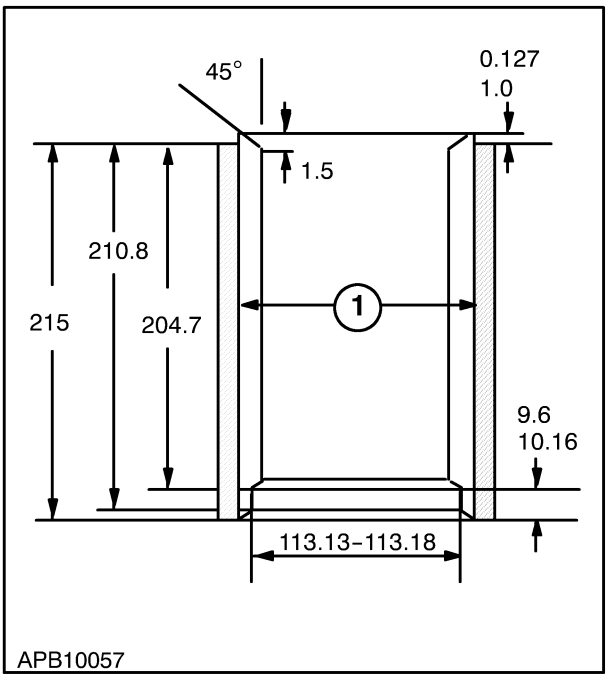

63

NOTE: *Surface finish to be an average of 20 to 30 Microns, cross hatched at 35°-55°.*

Maximum Taper,
0.025mm (0.001in) through to bottom of the bore.

Maximum Ovality,
0.038mm (0.0015in) through to bottom of the bore.

Re-Assembly

NOTE: *Pistons that are replaced must be of the same type that were removed and have the same identification letters and numbers, as embossed on the underside of the old piston.*

1. Upon re-assembly with the piston at Top Dead Centre, ensure the piston to block height is correct using a dial indicator.

Naturally Aspirated,
0.28-0.58mm (0.011-0.023 in)

Turbocharged,
0-0.3mm (00.00-0.012 in)

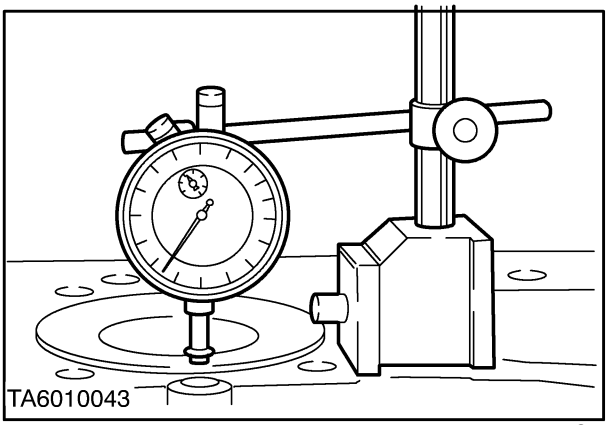

64

2. Check the piston to bore clearance in the following manner:-

Measure the cylinder bore diameter from the top of the block to point
"A", 82.6mm (3.25 in.)

Measure the diameter of the piston at point:-
"B", 97.28mm (3.83 in) for 5.0 in Naturally Aspirated engine
"B", 97.28mm (3.83 in) for 5.0 in Turbocharged engine

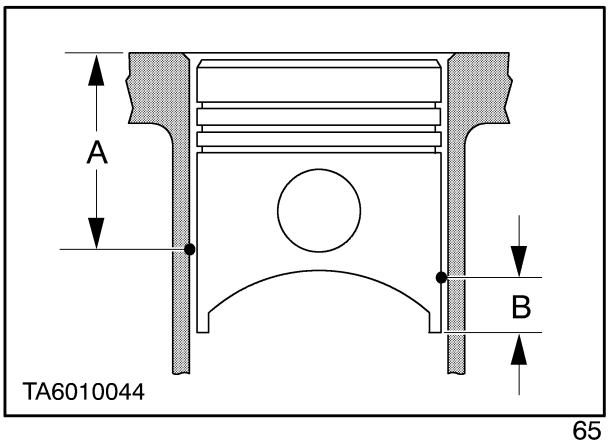

65

Subtract piston diameter from the bore diameter and the resultant figure for a new, unrun engine should be:-
0.140-0.171 mm (0.0055-0.0067 in)
Naturally Aspirated
0.166-0.188 mm (0.0064-0.0074 in)
Turbocharged engines.

After an engine has run and settled down the maximum bore to piston clearance allowed is 0.250mm (0.011in)

NOTE: *Pistons are only available as standard. New pistons should always be fitted if the clearance exceeds specification.*

If clearance is "greater" try a similar new piston, if limit is still exceeded it will be necessary to rebore and resleeve.

If the clearance is "less" hone bore to obtain desired clearance.

IMPORTANT: *Prior to re-assembly ensure the letter or grade mark on the piston is aligned to the pip on the connecting rod and installed facing to the front of the engine.*

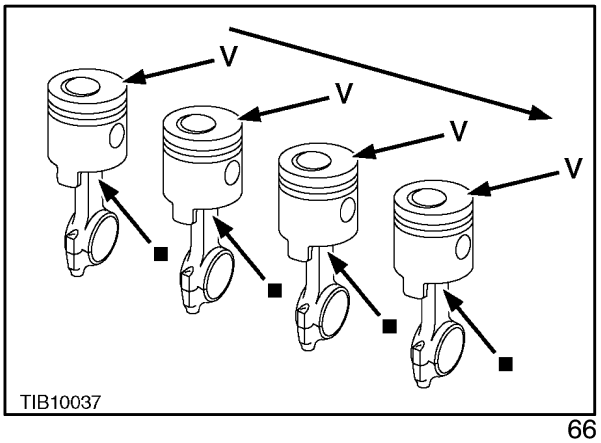

66

3. Lubricate all of the components with engine oil and assemble the connecting rod/piston.

4. Check the piston ring gap width, using a feeler gauge, in a vertical position at the top, middle, and bottom of the bore to:-

   Top compression ring.
   0.38-0.84mm (0.015-0.033 in),
   2nd compression ring.
   0.66-1.12mm (0.026-0.044 in),
   Oil control ring.
   0.38-0.84mm (0.015-0.033 in),

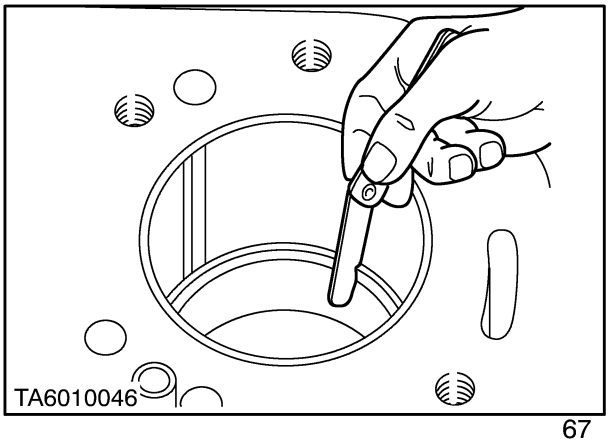

67

5. Using a new piston ring, check with a feeler gauge, the gap between the ring and groove.

Top compression ring
.0.0044-0.0061 in (0.112-0.155mm)

2nd compression ring
0.0039-0.0056 in (0.099-0.142mm)

Oil control ring.
0.0024-0.0041 in (0.061-0.104mm)

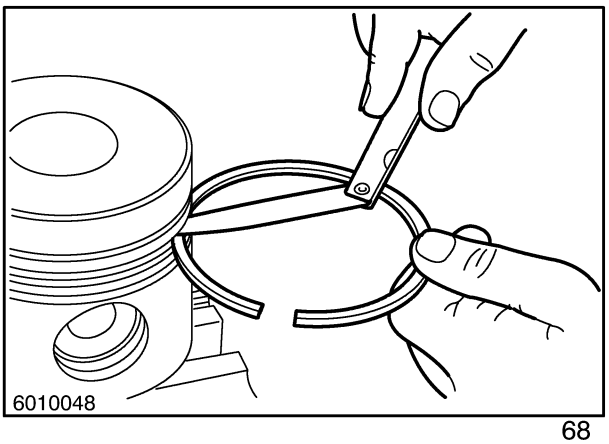

68

6. Ensure the correct expander is used to remove or install rings.

7. Install new piston rings but note the following,

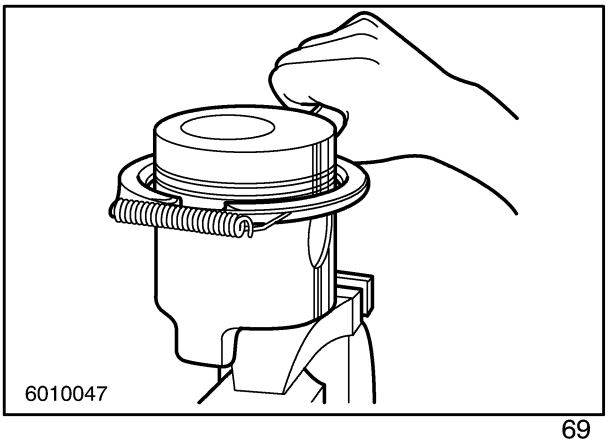

69

8. Install the top and second compression rings with the word top towards the top of the piston.

   A = Naturally Aspirated

   B = Turbocharged

NOTE: *Before installing new pistons and rings into a used cylinder bore , remove the high polish from the cylinder walls by honing as previously described.*

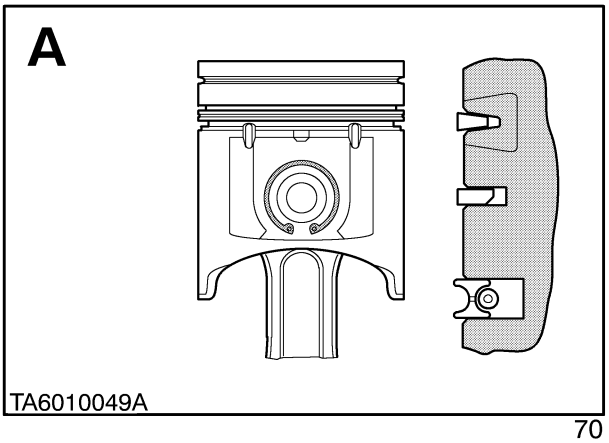

70

Ensure the ring gaps are staggered equally around the piston circumference.

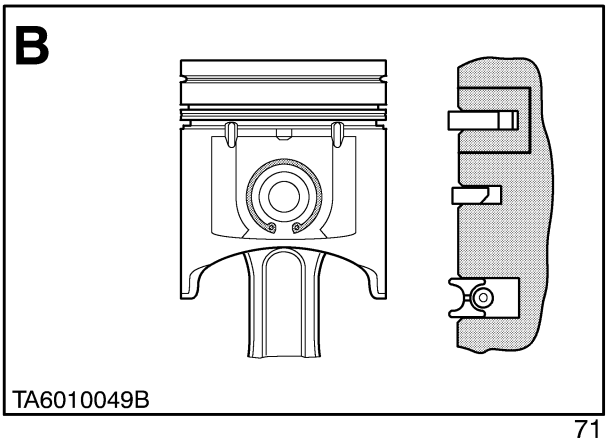

71

Piston Assembly Installation, Into Block

1. Select the correct bearing liners as in the following crankshaft section, and install in the rod and cap, ensure the liner tang locates in the slots of the rod and cap.

2. Turn the crankshaft to position No 1 crankpin at the bottom of the stroke, and lubricate all parts with new engine oil. Using a ring compressor, and a soft drive, slide pistons into bores, ensuring grade letter on pistons, is towards the front of the engine.

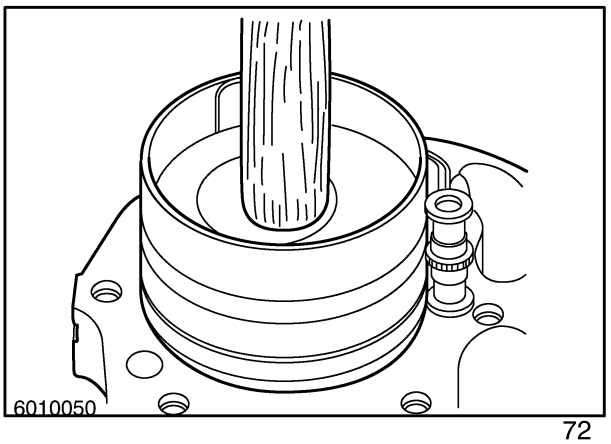

72

NOTE: *Replaceable bearing liners are installed in production, to ensure correct crankshaft journal to bearing clearance is maintained in service. The main bearings can be overhauled with the engine in the tractor. The crankshaft can only be serviced after removal from the tractor.*

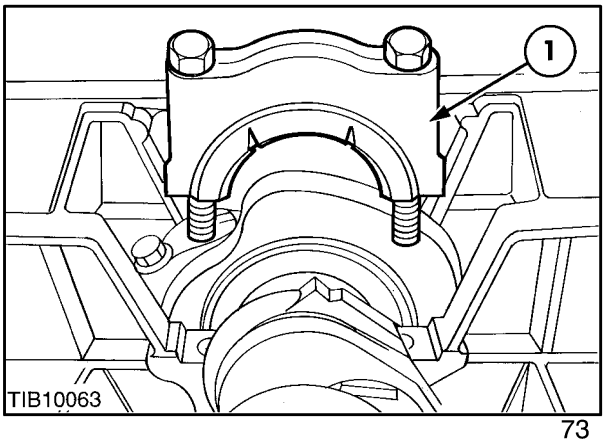

73

3. Ensure the connecting rod bearing liner, seats on the crankpin with the bearing cap fitted, to the connecting rod as a matched assembly. It is recommended that new bolts are fitted and lubricated with oil and tightened to a torque value of 149Nm (110 lbf ft).

4. Using feeler gauges, check the side clearance of each connecting rod to crankshaft and continue for remaining assemblies.
   0.13-0.33mm (0.005-0.013 in)

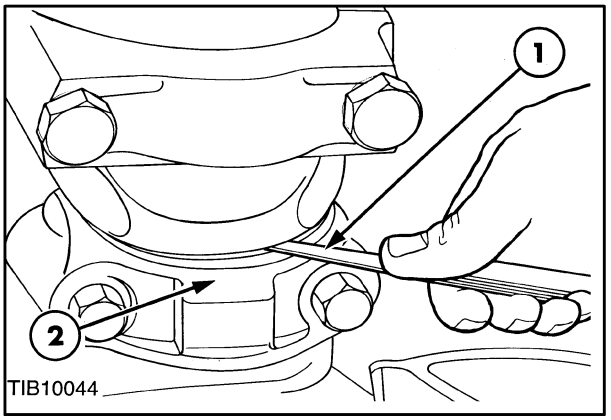

74

BALANCER / VIBRATION DAMPER

Removal

1. Remove the oil pan to expose the balancer, and using a dial indicator gauge, check backlash between crankshaft gear, and balancer drive gear. Position the dial plunger to the face of one of the drive gear teeth, then rock the gear to measure backlash. Readings should be taken at 90° intervals around the drive gear, to 0.05-0.30mm (0.002-0.012 in). If the specification is exceeded, install new balancer gears.

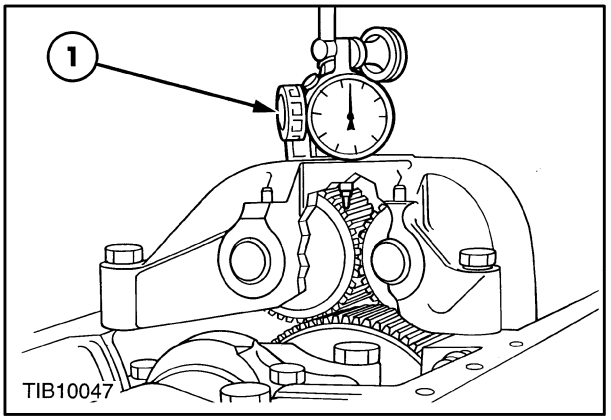

75

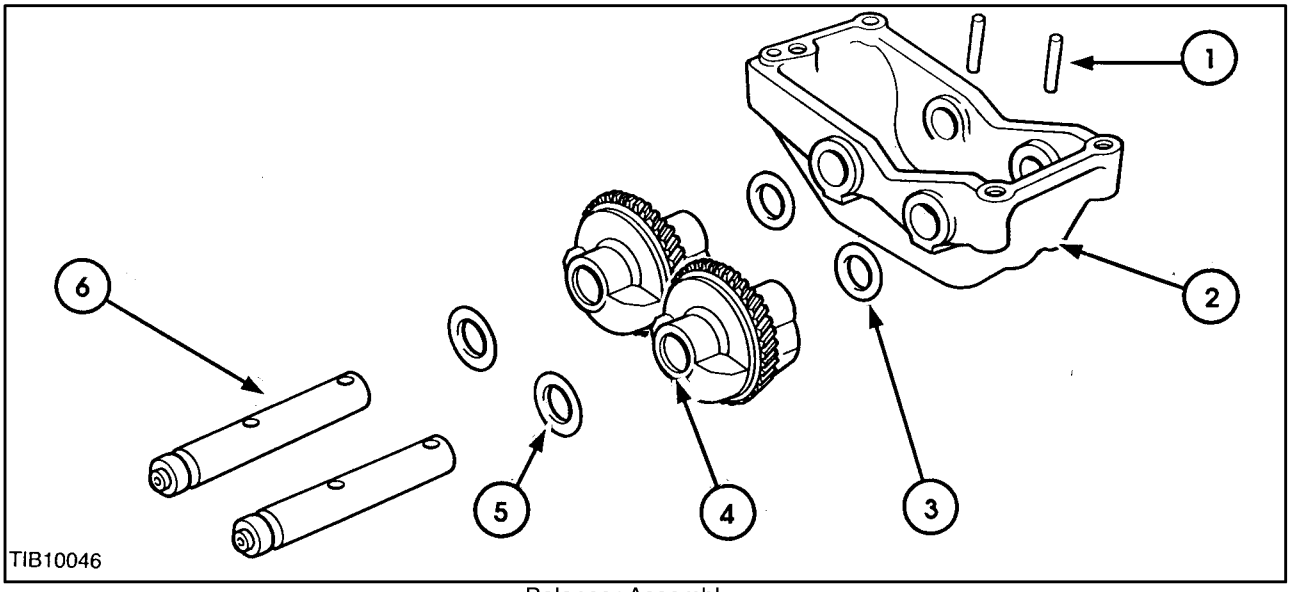

Balancer Assembly 76

1. Roll Pins
2. Balancer Housing
3. Washers
4. Balancer Gears
5. Washers
6. Balancer Gear Shafts

Disassembly

1. Extract the roll pins (1), securing the shafts to the housing and disassemble the balancer.

Inspection and repair

1. Measure the outside diameter of shafts (6) and the inside diameter of the gear bushings (4), and establish if clearance is to specification 0.012-0.038mm (0.0005-0.0015 in). If exceeded replace shaft and or gear assembly.

Re-Assembly

1. Position balancer gears and thrust washers in the housing, with timing marks aligned, and facing the roll pin side of the balancer. Install shafts from the opposite side and secure with roll pins.
2. Using a feeler gauge measure end float, of assembled gears is to the specification of, 0.20-0.51mm (0.008-0.020 in).
3. Position a dial indicator gauge to the tooth of one gear, and hold the other firmly. Rocking the free gear measure backlash at 90° intervals, around the gears to, 0.05-0.25mm (0.002-0.010 in).
4. Examine shafts and balancer gear teeth for wear and damage, and replace as necessary. Ensure lubrication holes in the shafts are free from obstruction upon reassembly.

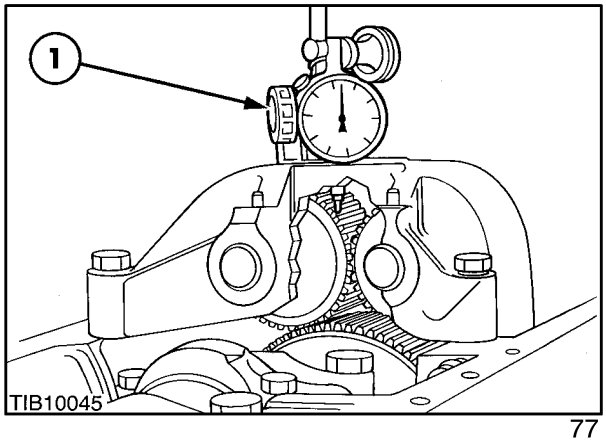

77

Installation

1. Clean all the mating surfaces, and install a new seal around the lubrication passage.

2. Rotate crankshaft until timing mark on crankshaft gear aligns with timing mark on balancer drive gear, position balancer on dowels install the bolts and torque to 108-120 Nm (80-90 lbf ft) 11-12.4 kgf m.

3. Recheck the gear backlash between crankshaft and balancer gear, as previously described and replace the oil pan.

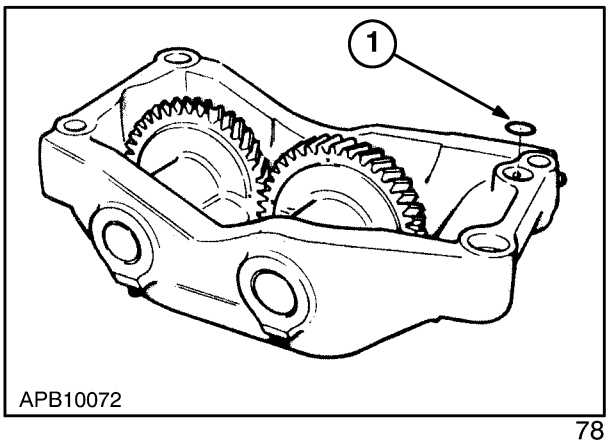

78

MAIN BEARING REMOVAL

1. Remove oil pan, and balancer, to gain access to the crankshaft. Remove the main bearing caps, and install one set at a time.

Inspection and Repair

1. Thoroughly clean bearing liners, journals, caps, and inspect for wear, scores, or damage replace as required.

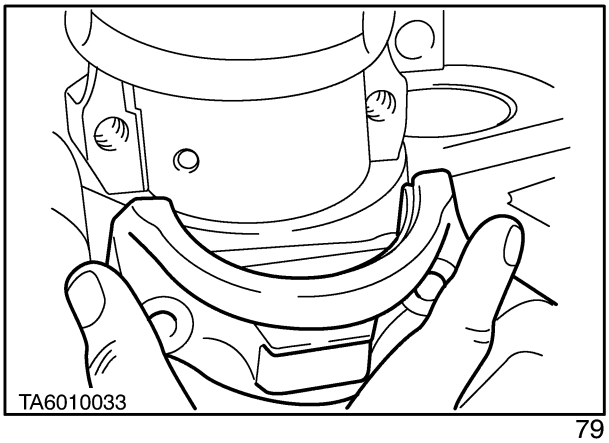

79

Installation

2. Coat all parts in new engine oil prior to assembly. Position bearing cap with locking tang, towards camshaft side of engine and fit the bolts, 190-203Nm (140-150 lbf ft) 19.3-20.1 kgm

3. If fitting a new thrust bearing liner it must be aligned as in the following crankshaft chapter.

FLYWHEEL REMOVAL

NOTE: *To remove the flywheel, the engine requires to be split from the transmission housing refer to "Separating the Unit".*

1. To gain access to the flywheel separate the engine to transmission.

NOTE: *Prior to removal and using a dial indicator, rotate the flywheel and measure to specification 0.127mm (0.005 in) Total Indicator Reading. If not to specification check crankshaft to flywheel seating.*

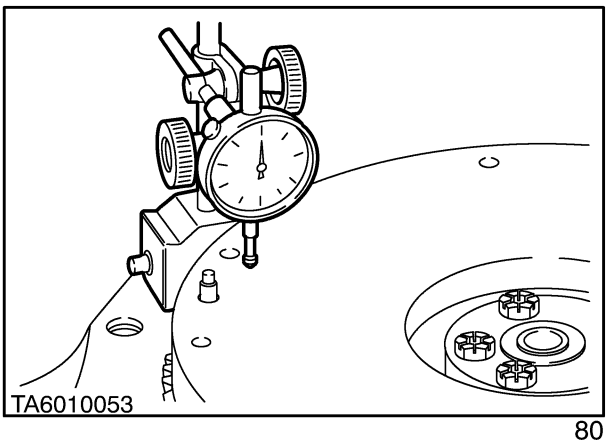

80

Inspection and Repair

Ring Gear

1. Inspect the flywheel ring gear, and if damaged renew in the following manner,

Cut old ring gear free from the flywheel.

Clean the mating surfaces of the new ring gear, and flywheel.

2. Use temperature indicating crayons to mark the side face of the ring gear in six equal places, mark with a 204°C (400°F) crayon at a point 13mm (0.5 in) below the root of the teeth, and mark with a 212°C (450°) crayon at a point just below root of the teeth.
3. Use an oxy-acetylene torch with a tip size of No 2 maximum, and direct the flame against the internal face of the gear.
4. Stop applying heat when the 204°C (400°F) crayon mark melts but before the 212°C (450°F) crayon mark melts.

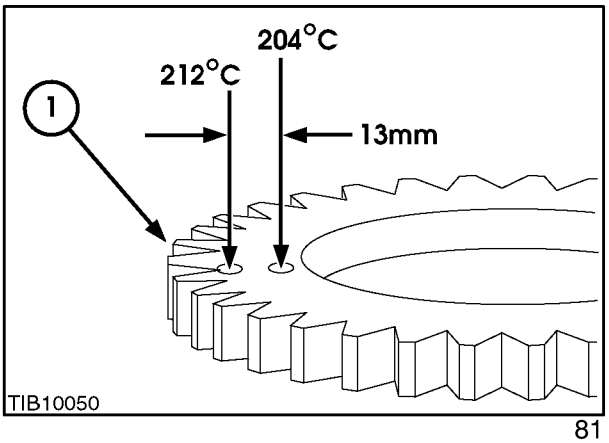

81

5. Quickly place the hot gear on the flywheel, with flat face against the shoulder on the flywheel. The gear to flywheel runout should be checked using a dial indicator and should not exceed a Total Indicator Reading of 0.63mm (0.025 in).

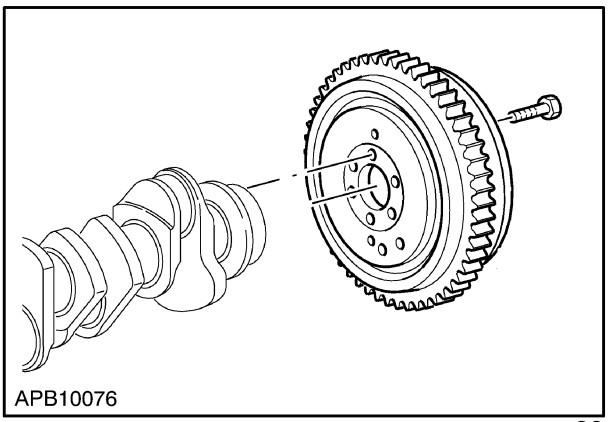

82

Flywheel Surface

1. In the event of flywheel surface damage due to excessive clutch wear the surface may be skimmed. A maximum of 3 mm (0.118 in) is to be removed from the face of the flywheel.

Installation

1. Clean the crankshaft rear flange and mating surface of the flywheel, install the flywheel, and torque the bolts to,197N m (145 lbf ft) 20 kgf m.

REAR COVER PLATE REMOVAL

To gain access to the engine oil pump, camshaft gear, or end of crankshaft remove the oil pan as previously described along with the rear cover, in the following manner.

1. With rear of engine exposed loosen and remove the 12 attaching bolts, and gently pry off cover plate.

2. Clean off all sealer, remove crankshaft oil seal, and check for damage or distortion around the sealing faces.

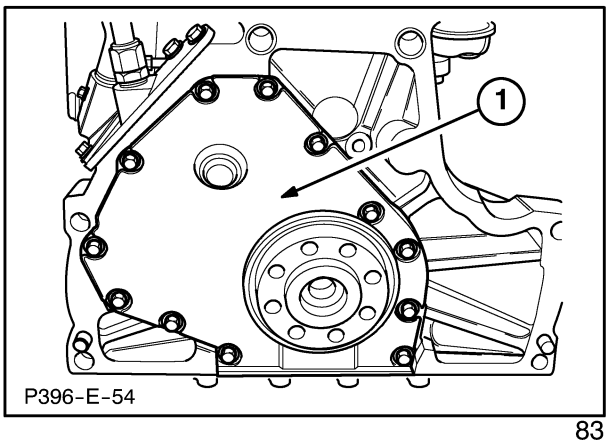

83

Installation

1. Ensure rear of block face is clean and free of old sealer, install a new gasket and apply sealer to faces (1). With the plate in the recess install and leave the bolts loose.

2. Apply a liberal coating of new engine oil on a new oil seal and position the rear seal over the end of the crankshaft. Locate tool, No FNH 01301, on the end of the crankshaft using the three attaching bolts. Tighten evenly, and squarely, until the seal is fully seated.

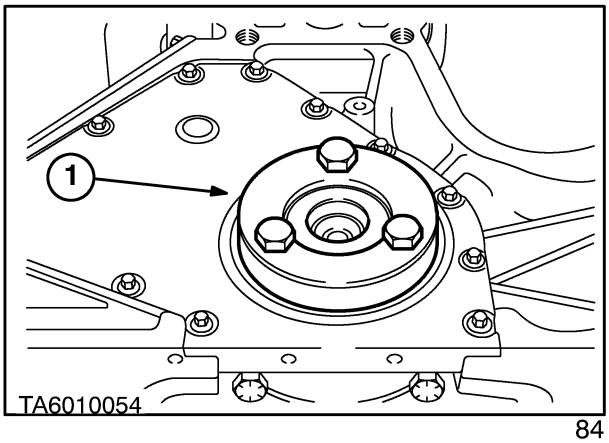

84

As an alternative the rear crankshaft oil seal can be installed using the following installation tool.

3. Apply a liberal coating of clean engine oil to the rear seal retainer, seal, and journal. A new seal should be mounted on the crankshaft, then bolt tool FT 6212 to crankshaft end and install the new seal squarely.

4. Secure centre stock of tool to crankshaft flange with two screws. Assemble cylinder end plate to centre stock and secure with nut and washer. Tighten the nut until outer diameter of tool abuts retainer. Tool must not be over tightened as stress and distortion could be imposed on the retainer.

5. Remove the tool after assembly and check the crankshaft seal run out as shown in Figure 87.

NOTE: *The first seal replacement should be pushed into retainer with plain end of tool and subsequent seals with stepped end of tool which will reposition seal 1.52mm (0.060 in) further in.*

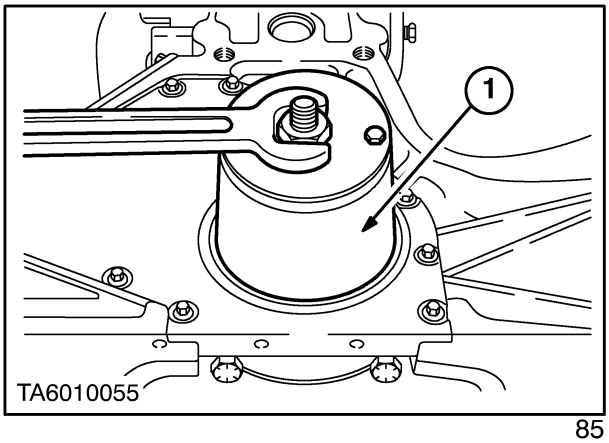

85

6. Tighten the twelve bolts, in sequence (1) to, 16–23N m (12–17 lbf ft) 1.6–2.3 kgf m.

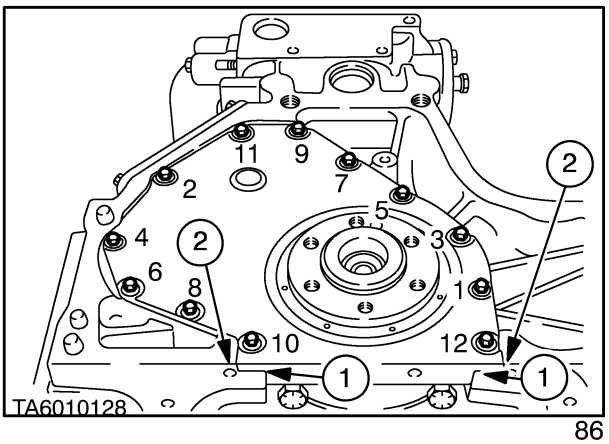

86

7. With new crankshaft seal installed, place a dial indicator, on the end of the crankshaft and ensure seal runout is within 0.51mm (0.020 in) Total Indicator Reading.

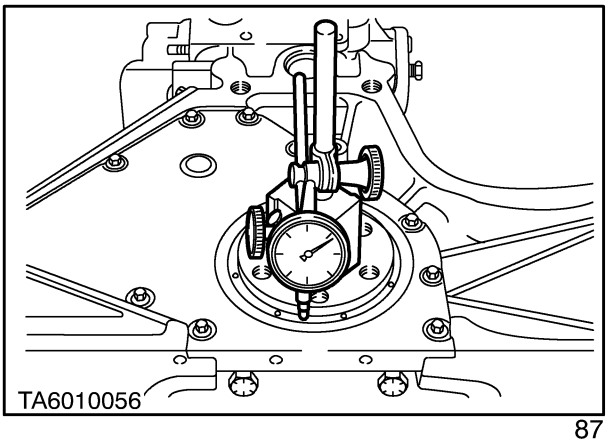

87

OIL PUMP REMOVAL

NOTE: *The oil pump can only be removed with the engine split from the transmission, and the flywheel, back plate, engine oil pan, and oil pump tube removed.*

1. Prior to pump removal check pump gear to camshaft gear backlash, does not exceed, 0.40–0.56mm (0.016–0.022 in).

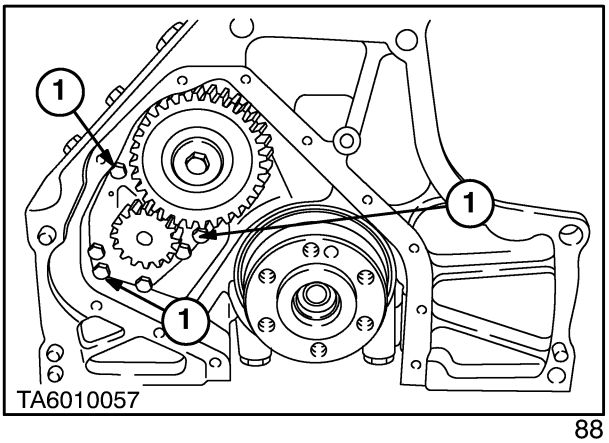

88

2. Loosen and remove the camshaft gear, to expose the oil pump, detach the 3 pump mounting bolts, and withdraw the pump from the block.

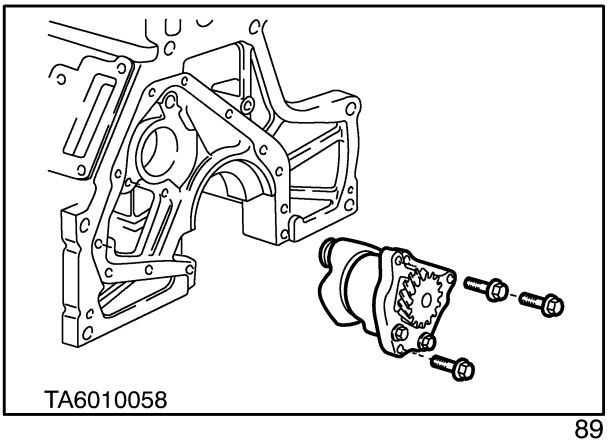

89

Installation

1. Clean and coat parts in new engine oil.

2. Fit a new O-Ring to the pump output tube and into suction port. lubricate and insert the pump into the block tightening the bolts, to, 23.0-28.4N m (17-21lbf ft) 2.3-2.9kgfm

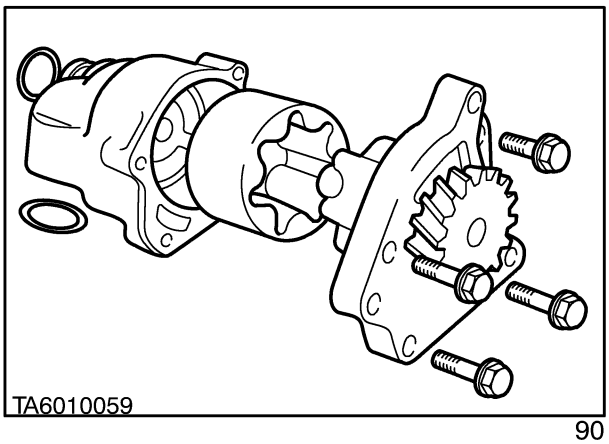

90

3. Insert tube/screen assembly into pump through bottom of engine. Fitting a new gasket, and torque the attaching bolts to, 27-34N m (20-25 lbf ft) 2.7-3.4 kgf m,

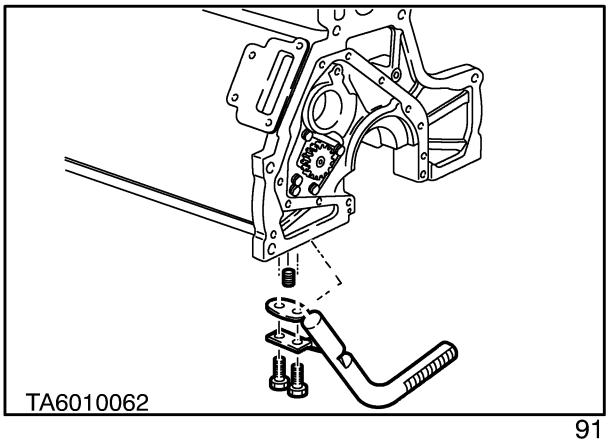

91

Oil Filter Support Assembly

Removal

1. Unscrew and discard the old filter (1). Loosen the attaching bolts and oil connections and remove the filter support assembly from the block. Discarding the O-Rings.

2. Clean assembly in a suitable solvent and ensure all ports are free of dirt.

Installation

1. Lubricate the pressure relief valve and spring and insert into housing, ensuring free movement.
   Fit a new 'O'-Ring to the plug and torque to, 55N m (42 lbf ft).

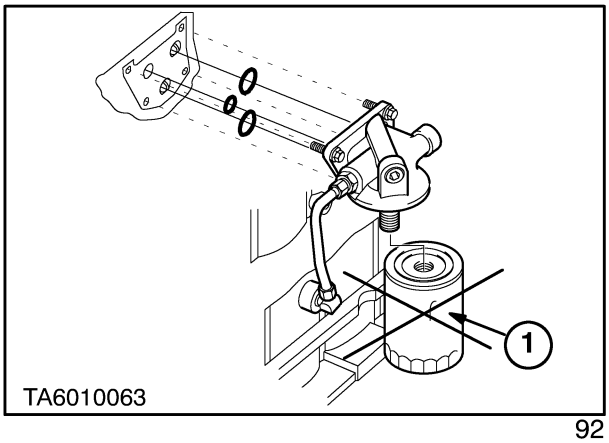

92

NOTE: *On some models including the turbocharged version the pressure relief valve "end plug" is replaced by an oil return tube from the engine block. Where this pipe is fitted a plug is used to blank the oil return port to the engine block.*

2. Fit tube to the connector and torque to 27Nm (20 lbf ft).

3. Refit the oil filter head to the engine block with new O-rings and plug where required as above and torque the bolts to, 34-47 Nm (26-35 lbf ft)

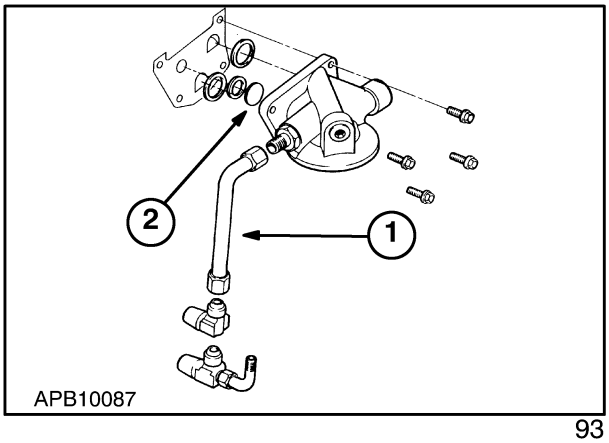

93

CRANKSHAFT REMOVAL

1. Remove the engine from the tractor and place on an engine stand.
2. Remove the flywheel, rear cover plate, crankshaft pulley and engine front cover.

NOTE: *If crankshaft is removed with cylinder head in position ensure all timing marks are realigned prior to re-assembly. This action will prevent possible interference between valves and pistons during reassembly.*

3. Remove the oil pan and oil pump.
4. Remove the connecting rod caps, main bearing caps and liners, and identify to facilitate re-assembly.
5. Carefully remove crankshaft from cylinder block.

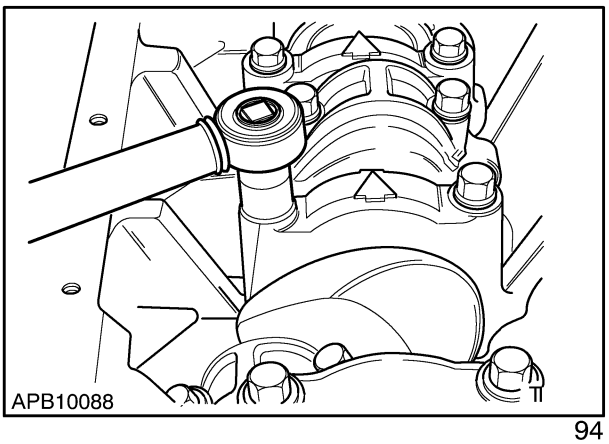

94

Inspection and repair

NOTE: *Current production engines may have a crankshaft with main or crankpin journals ground 0.010 in (0.25mm) undersize. These are identified with the letters 010 MUS and or 010 PUS respectively, letters being stamped on one of the crankshaft counter balance weights.*

1. If crankshaft timing gear teeth are worn or damaged replace as necessary as described.
2. Wash the crankshaft and drilled passages in a suitable solvent. Dress minor imperfections using an oil stone but for severely marked journals, machine to the next size to suit available service bearings.
3. Measure diameter of each journal in four places to determine out-of-round, taper, or wear.
   Measuring, A, compared with B, indicates vertical taper.
   Measuring, C, compared with D, indicates horizontal taper.
   Measuring, A and B, compared with C and D, indicates journal out-of-round.
4. If the journal exceeds specified limits refer to “specifications” and refinish journal to the next service bearing available.
5. Examine the rear oil seal journal for score marks, remove minor imperfections with fine emery cloth, and if severely damaged renew the crankshaft.

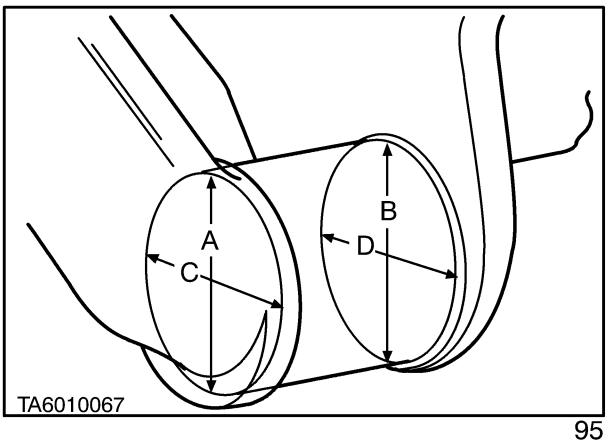

95

With the crankshaft removed check the oil lubrication jets situated in the block journals are clear and free of contaminates.

If replacing the oil jets gently tap out the old ones and replace with new.

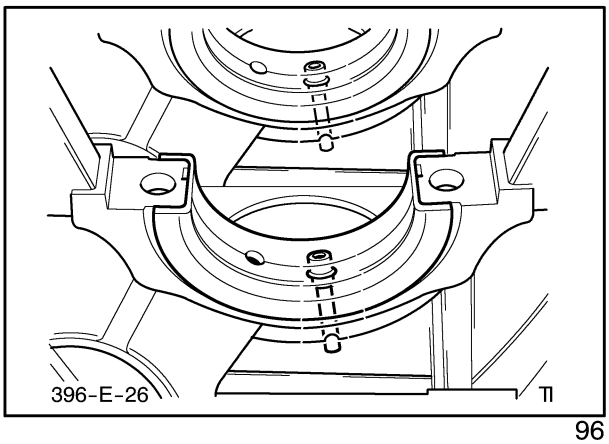

96

CRANKSHAFT RE-ASSEMBLY

NOTE: *Normally main bearing journals wear evenly and will not be out-of-round, but if a liner which is to specification is fitted to an out-of round journal, ensure liner suits maximum diameter of journal.*

1. If these combinations of liners do not produce specified clearance refinish crankshaft and fit suitable service bearings.

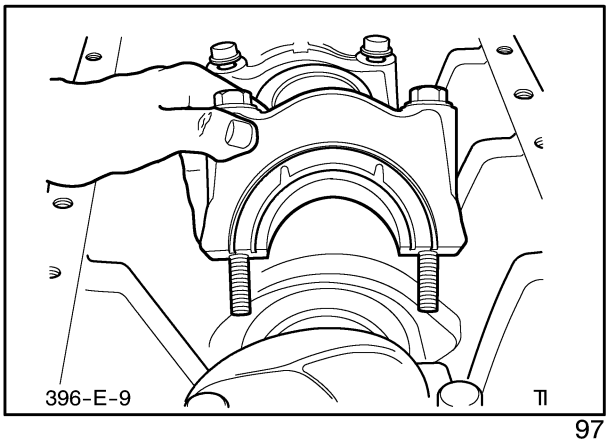

97

IMPORTANT: *Engines may be assembled with liners of different material, but liners of the same material must be used on the same journal.*

2. Position the bearing liners and caps in the block and coat with oil. If the crankshaft has been refinished, fit the correct service bearing liners.

3. Ensure the bearing surfaces are clean and bearing liner tangs, align with slots in the block and cap.

4. Align the timing mark on the crankshaft gear, with that of the camshaft idler gear and install the crankshaft. Install a thrust bearing cap with flange type bearing liner first, installing remaining bearing caps to their original location.

5. Tighten all bearing caps (except thrust bearing cap, leave finger tight) to a torque of 197 Nm (145 lbf ft) 19.5 kgf m.

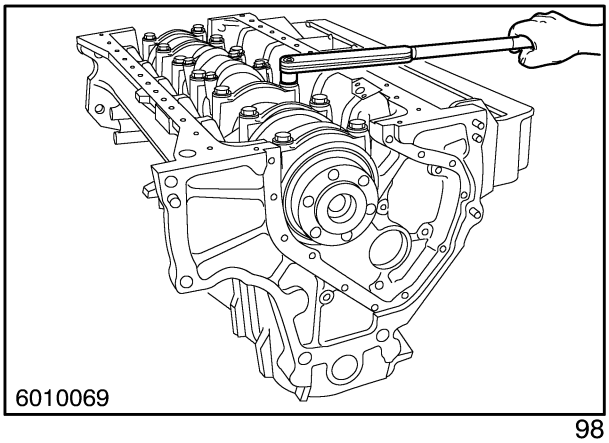

98

6. Pry the crankshaft forward against thrust surface of bearing, hold crankshaft forward and pry bearing cap rearwards taking care not to pry against flange of bearing liner. This will align thrust surfaces of both halves of bearing, hold forward pressure on crankshaft and tighten bearing cap bolts to a torque of 197N m (145 lbf ft) 19.5 kgf m.

NOTE: *Do not pre-install seal into retainer. To ensure seal concentricity, it must be assembled with rear plate and installation tool when fitted to crankshaft.*

7. Check crankshaft end play with a dial indicator gauge, pry crankshaft towards front of engine and set dial indicator to zero. Pry crankshaft towards rear of engine and note reading on dial if end play exceeds 0.10-0.20mm (0.004-0.008 in) fit a new thrust bearing liner.

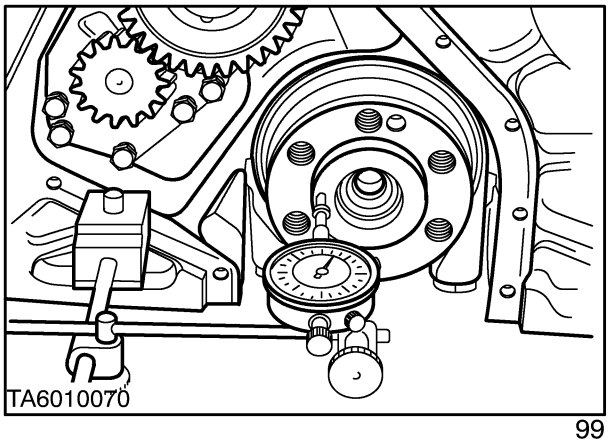

99

8. If the end play is less than specification check thrust bearing for burrs, scratches, or dirt, and re-align thrust bearing as in operation12.

9. Install rear crankshaft oil seal as previously described in back plate removal.

CAMSHAFT REMOVAL

NOTE: *The camshaft bearings and tappets can only be serviced with engine removed from the tractor.*

1. Remove the engine front cover, and cylinder head.

2. Check the camshaft end play, see timing gears section, and remove gear, or remove the thrust plate bolts for removal of gear and camshaft as an assembly.

3. After removal of the flywheel, and rear cover, remove the camshaft oil pump drive gear.

4. Invert the engine on the stand, if camshaft bearings are to be replaced, and remove the oil pan.

5. Carefully withdraw the camshaft from the rear of engine.

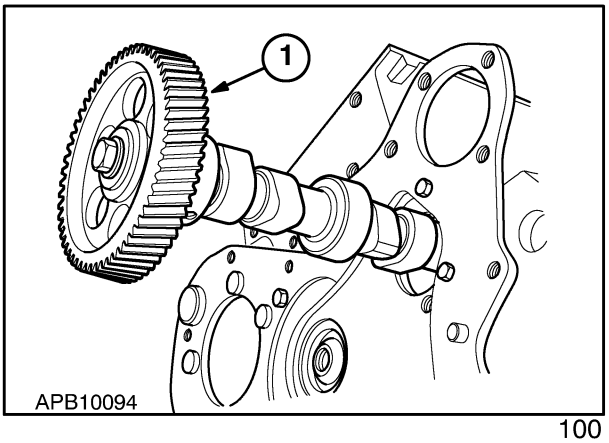

100

6. Lift out the tappets and place in a numbered rack for reassembly.

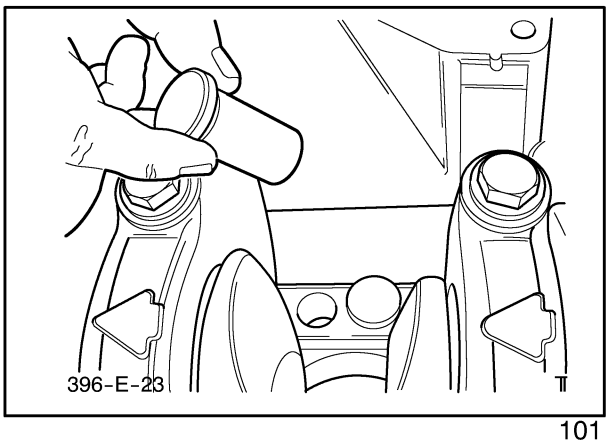

101

Inspection and repair

1. Inspect the camshaft journals, lobes, for damage, pitting, or heat discolouration. If any of these conditions exist install a new camshaft.
2. Inspect the oil pump drive gear on camshaft for broken or worn teeth, and mating gear on oil pump. If any wear or damage is apparent fit new gears.
3. Check each tappet for wear or damage and check diameters, if not to specification renew, 25.15-25.17mm (0.9900-0.9910 in).
4. Measure the diameter and out-of-round condition of bearing journals, if exceeded fit a new camshaft,
   60.693-60.719mm (2.389-2.390 in).

CAMSHAFT BEARINGS

1. Inspect the camshaft bearings for wear or damage. Measure the clearance between the internal diameter of bearing and outside diameter of respective journal, 0.025-0.076mm (0.001-0.003 in).
2. If specification is exceeded install new bearings using, Remover/Replacer Tool No FT 6203, or 1255 and handle, Tool No N 6261-A or 1442.
3. To remove, Position tool against bearing to be removed and attach handle, driving bearing from bore.
4. To install, Align oil holes of new bearing with holes in block, and drive bearing into bore using tools as described.

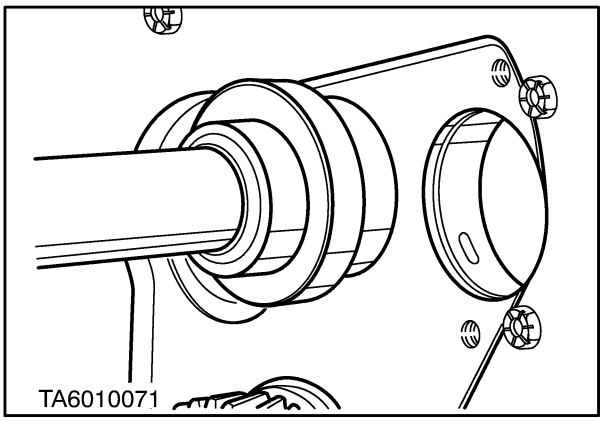

102

NOTE: *A positive alignment check can only be made with crankshaft removed when an 4.6mm (0.018 in) rod can be passed down the oil passage from the crankshaft main bearing. Liner is correctly positioned when end of rod passes through oil hole in the liner.*

Installation

1. Apply petroleum jelly to each tappet foot, and coat tappet body with oil. Install tappets in bores from which they were removed.

2. Oil camshaft journals and apply petroleum jelly to the cam lobes, and install camshaft into engine.

3. Install new spacer and keyway on end of camshaft.

4. Install a new thrust plate prior and torque 41-54 Nm (30-40 lbf ft).

5. Install camshaft gear, and align the camshaft gear timing mark and torque bolt to 55-77 Nm (43-58 lbf ft), and recheck end play.

6. Apply sealant 82995782 to the sealing flange of the front cover plate on re-assembly.

ENGINE COMPRESSION TEST

TEST PROCEDURE

1. Be sure battery performance meets specifications.

2. Warm up the engine by operating for a minimum of half an hour at 1200 rev / min

3. Stop the engine and remove the injector and seat washer from no1 cylinder.

4. Clean the injector bore and crank the engine to blow out any loose carbon particles.

5. Install a proprietary engine compression test gauge into the injector bore, using a new seat washer and the injector mounting bolts.

6. Connect the gauge and hose to the adapter.

7. Crank the engine at 200 rev/min with the engine stop cable pulled out where fitted, or the electric fuel shut off wire disconnected to prevent engine start up.

8. Observe the gauge reading, and repeat the compression test, steps 5-7 for each cylinder.

9. All cylinder compressions should be uniformly within 1.7 bar (25 lbf in^2) of each other.

10. A reading of more than the 1.7 bar (25 lbf in^2) below the other cylinders indicates leakage at the cylinder head gasket, piston rings or valves.

11. A reading of more than 1.7 bar (25 lbf in^2) above the other cylinders indicates excessive carbon deposits on the piston and cylinder head.

12. A low even compression in two adjacent cylinders indicates a cylinder head gasket leak. Check this item before condemning the rings or valves.

TEST CONCLUSION

To determine whether the rings or the valves are at fault, squirt the equivalent of a tablespoon of heavy oil into the combustion chamber. Crank the engine to distribute the oil and repeat the compression test.

The oil will temporarily seal any leakage past the rings. If approximately the same reading is obtained, the rings are satisfactory, but the valves are leaking.

If compression has increased over the original reading, there is leakage past the rings.

During a compression test, if the pressure fails to climb steadily and remains the same during the first two successive strokes, but climbs higher on the succeeding strokes, or fails to climb during the entire test, suspect a sticking valve.

COOLING

SPECIFICATIONS

THERMOSTAT

Opening Temperature	79-83°C (174-181°F)
Fully Open	93-96°C (199-205°F)

RADIATOR CAP

Opening Pressure	0.9 bar (13 lbs in^2)

WATER PUMP

Type	Centrifugal
Drive	Multi 'V'

COOLING SYSTEM CAPACITIES

Model	Litres	Imp Gals	U.S. Gals
4 CYL with cab	16	3.5	4.2
4 CYL less cab	14.5	3.2	3.8

COOLING FLUID

Content Mixture - Water 50%, Antifreeze 50% . If the recommended antifreeze is not used, a heavy duty antifreeze must be used with a 5% solution of Inhibitor. This inhibitor must be added to the cooling system and is available from Dealers Part No FW 15.

TORQUES

TORQUE VALUES - VARIOUS	Nm	lbf ft	Kgf m
Water Pump-to-Cylinder Block	48	35	3.6
Water Pump Cover-to-Pump	27	20	2.8
Thermostat Housing Bolts	24	18	2.4
Fan Blade to Support Body	27	21	2.8
Temperature Senders	20	15	2.0

SPECIAL TOOLS

(Prior Tool Numbers, where applicable, shown in brackets)

DESCRIPTION	V.L. CHURCHILL TOOL No.	NUDAY TOOL No.	FNH TOOL No.
Water Pump Seal Replacer	FT.6209	4672	T87T-6312-A

SEALANTS

Part Number	Name
82995768	Sealer-Anaerobic Low strength
82995776	Sealer-Silicone
82995774	Sealer-Polyester Urethane
82995773	Sealer-Anaerobic

FAULT FINDING

IMPORTANT: *When effecting a repair the cause of the problem must be investigated and corrected to avoid repeat failures.*

The following table lists problems and their possible causes with recommended remedial action.

PROBLEM	POSSIBLE CAUSES	REMEDY
Engine overheats	1. Hose connection leaking or collapsed	1. Tighten hose connection, renew hose if damaged
	2. Radiator core tubes blocked	2. Check free flow
	3. Radiator cap defective or not sealing	3. Renew radiator cap
	4. Radiator leakage	4. Repair/renew radiator
	5. Radiator fins restricted	5. Clean with compressed air
	6. Faulty thermostat	6. Renew thermostat
	7. Internal engine leakage	7. Check for source of leakage, renew gasket or defective parts
	8. Water pump faulty	8. Overhaul water pump
	9. Exhaust gas leakage into cooling system	9. Renew cylinder head gasket, check head for damage or distortion
	10. Coolant aeration	10. Tighten all connections and check coolant level is correct. Ensure cylinder head gasket has not blown
	11. Cylinder head gasket improperly installed	11. Renew cylinder head gasket
	12. Hot spot due to rust and scale or clogged water jackets	12. Reverse flush entire cooling system
	13. Obstruction to radiator air flow	13. Remove the obstruction
	14. Extended engine idling	14. Do not allow engine to idle for long periods
	15. Oil cooler tube blocked	15. Clean
Water temperature gauge fails to reach normal operating temperature	1. Faulty temperature sender	1. Renew sender switch
	2. Incorrect or faulty thermostat	2. Renew thermostat
	3. Faulty water temperature gauge	3. Renew temperature gauge

COOLING SYSTEM DESCRIPTION AND OPERATION

NOTE: *Do not operate an engine without a thermostat. It is recommended that a solution of a 50% clean water, and 50% recommended antifreeze, see specifications, is used. When the recommended Antifreeze is not used, a 5% solution of the recommended inhibitor must be added to the cooling system.*

The cooling system for the new generation of engines, is of the recirculating by-pass type with full length water jackets for each cylinder. The coolant is drawn from the bottom tank of the radiator by the water pump, which passes the coolant to the cylinder block. This coolant then flows through cored passages to cool the cylinder walls.

The thermostat is located in the top of the water pump body, and controls the flow of the water as required by temperature changes.

NOTE: *A faulty thermostat may cause the engine to operate at too hot, or cold, an operating temperature. If not replaced this could result in a damaged engine, or impaired engine performance.*

When the thermostat is closed, Figure 103**,** a recirculating by-pass is provided to allow the coolant to recirculate from the head to the block to effect a faster warm-up.

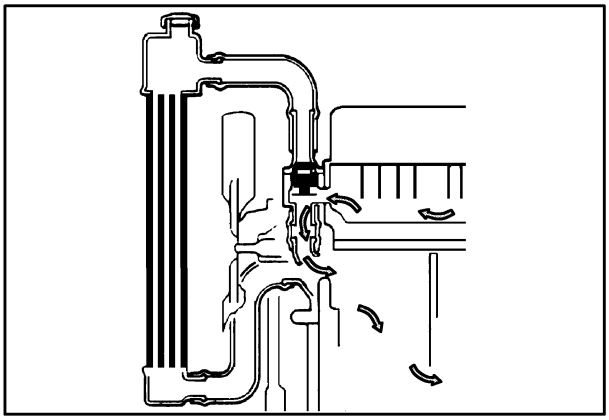

103

Once the engine has reached its normal operating temperature, the thermostat will open, Figure 104 and allow water to be drawn through the radiator by the pump action. Cooled water then returns to the engine system.

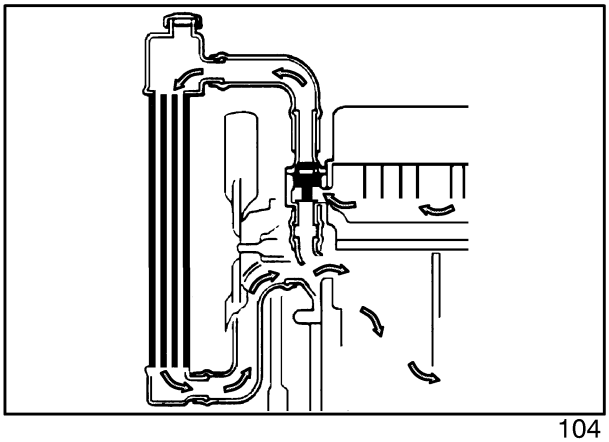

104

OVERHAUL

Radiator Removal

13. Raise hood, disconnect battery

14. Remove the engine coolant drain plug (1) situated behind the oil filter body on the left hand side of the engine and drain the coolant into a suitable clean container.

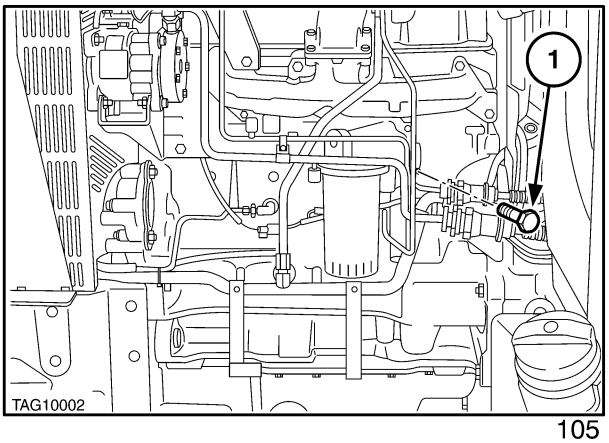

105

Remove:

15. Air conditioning (3) and oil cooler (4) radiators if fitted from front of radiator.

16. Side guards from radiator shell (5)

17. Remove the expansion radiator cap (1) or radiator cap (2) to speed up the draining, using caution if the system is hot.

18. Lower radiator hose – Drain into suitable container

19. Engine oil cooler connection

20. Heater hose connection

RIGHT HAND SIDE

21. Top hose

22. Engine oil cooler connection

23. Ensure all pipes are disconnected, looms are unclipped, and away from the radiator assembly.

24. Remove the attaching bolts and lift the radiator (6) up and clear of the vehicle.

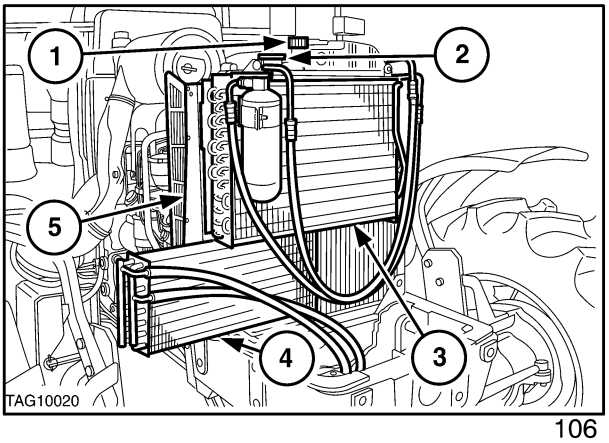

106

Inspection and Repair

1. Inspect the fins for damage and repair as required, ensuring they are free from any obstruction.

2. Check the radiator for leaks, and repair as required. The radiator is fitted with an engine oil heat exchanger in the lower tank which should be checked for leaks.

Installation

Installation of the radiator follows the removal procedure in reverse, but upon installation observe the following requirements.

1. Refill the system through the coolant recovery radiator pressure cap (1) until completely full. Re-install the 0.9bar (13 lbf $in^{2)}$ radiator cap (2) and continue filling through the expansion tank until full. Refit expansion cap.

2. If engine oil cooler tubes have been disturbed check the engine oil level.

3. Run the engine for several minutes checking for leaks, topping up any fluid levels that may have settled during testing.

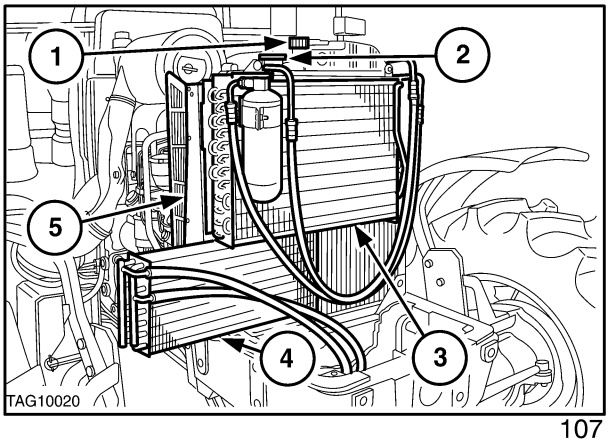

107

THERMOSTAT REMOVAL

1. Drain the coolant system below that of the level of the thermostat housing.

2. Remove the thermostat housing retaining bolts (1), and move the housing with tube attached to one side.

3. Withdraw the thermostat (2) from the housing, along with the gasket.

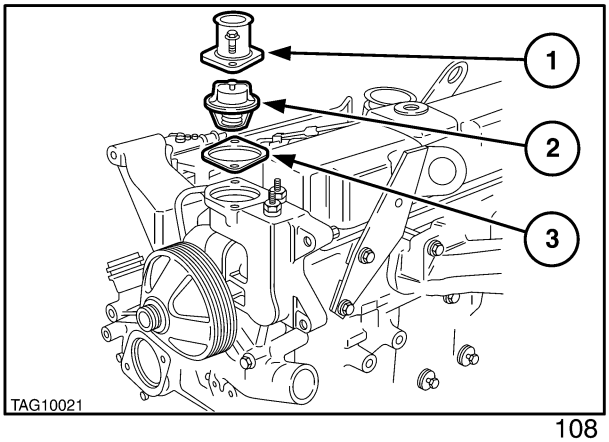

108

Inspection and Repair

1. Place the thermostat in a container of water, and raise the temperature to 100°C (212°F). If the thermostat fails to open when hot, or close properly when cooled, it must be replaced.

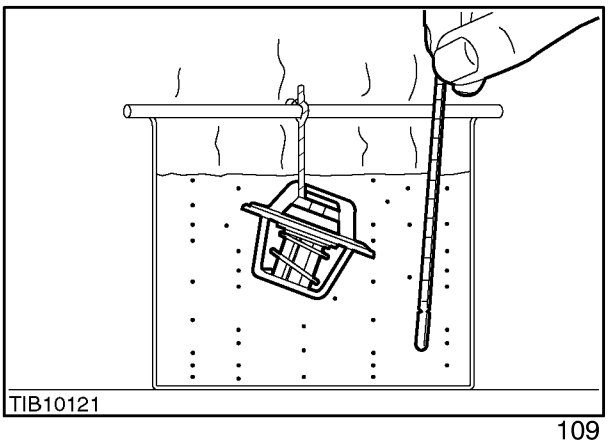

109

Installation

Installation of the thermostat is the reverse of the removal procedure but observing the following:

1. Prior to re-assembly ensure the thermostat housing faces are clean and free of old sealer or gasket material. Clean the faces with a small stone or fine grit paper.

2. Coat a new gasket with sealer 82995774 and position in the recess on the thermostat housing, prior to installing the thermostat.

3. Coat the edge of the thermostat with grease and install, with the heat element located in the cylinder head.

4. Refit the thermostat housing and torque the two bolts to 20-28Nm (15-21 lbs ft).

5. Ensure the correct grade, and quantity of antifreeze, is added to the coolant. Recommended content mixture is Water 50%, with 50% antifreeze.

TEMPERATURE WARNING SENDER

1. The engine temperature warning (1), is located on the thermostat housing.

Installation

1. If a fault occurs fit a new sender and apply sealant to the threaded portion of the sender body and torque to, 16-24Nm (12-18 lbf ft).

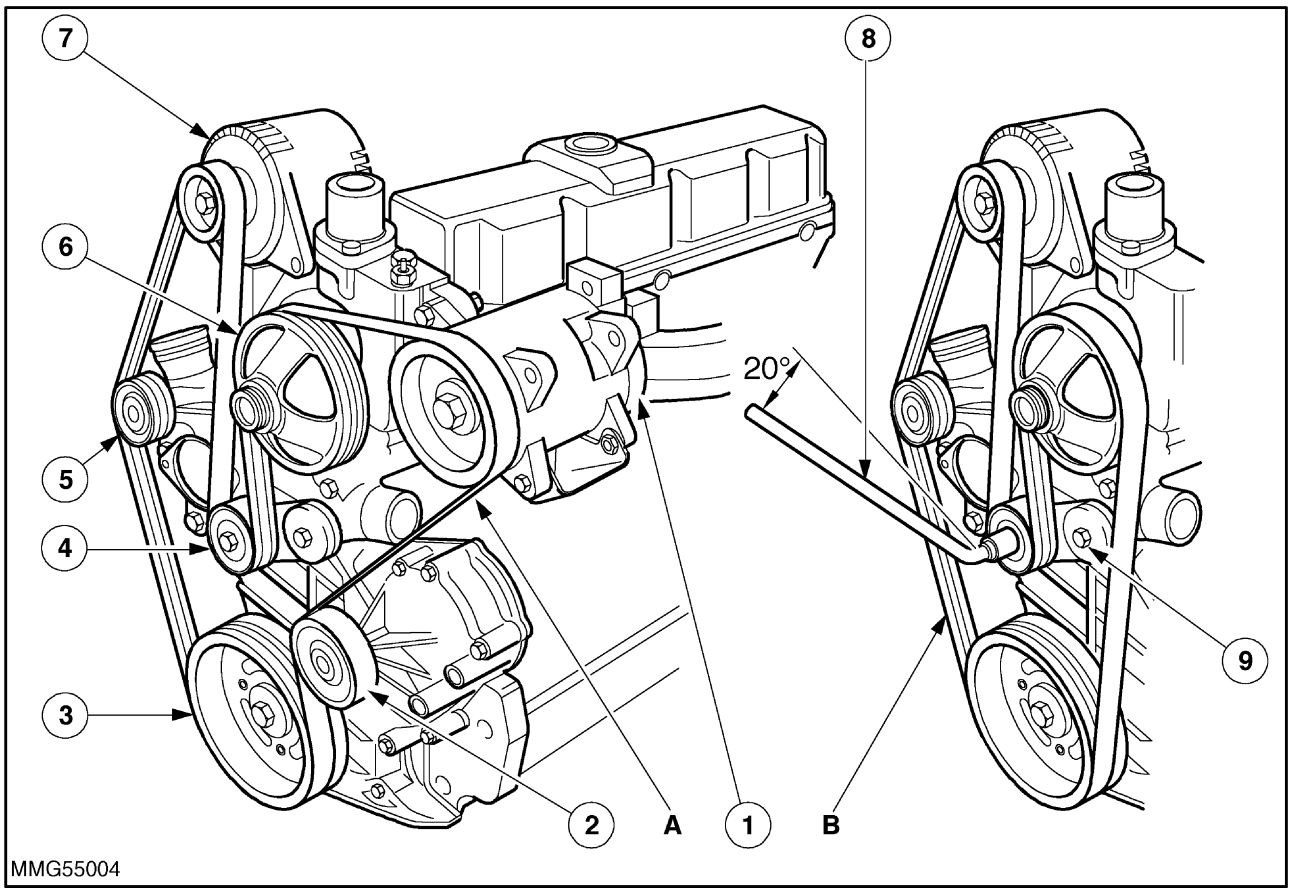

Fan Belt Tensioner 110

A. Fan Belt with Air Conditioning

B. Fan Belt less Air Conditioning

1. Air conditioning Compressor (optional)
2. Idler Pulley (with Air Conditioning only)
3. Crankshaft Pulley
4. Tensioner Assembly
5. Idler Pulley
6. Water Pump Pulley
7. Alternator
8. Torque Wrench
9. Tensioner Attaching Bolt

FAN BELT TENSIONER REMOVAL

1. The fan belt should be removed in the following manner. Place a lever with socket attachment onto the tensioner retaining bolt and gently lever the tensioner up, Figure 110. Remove the fan belt from the pulley and allow the tensioner to return to its untensioned position once the belt has been removed.

2. Remove the tensioner from the pump by loosening and removing the centre attaching bolt.

Inspection and Repair

1. Checking of the tensioner assembly operation should be carried out with the tensioner assembly still attached to the water pump. To check the spring load, place a "break back" torque bar pre-set to 52-63 lbf ft (70-85 Nm) 7.1-8.7 kgfm, on to the pulley attaching bolt. Raise the lever up through an arc of 20° maximum. If the torque bar does not "break" within the range a new tensioner assembly is required.

2. Ensure the tensioner pulley rotates freely by hand. If not replace with new parts.

Re-Assembly

1. Fit a new pulley to the assembly if required, and torque the attaching bolt to 34.5-44 lbf ft (46.5-60 Nm) 4.7-6.1 kgfm.

2. To re-assemble the arm assembly, position the tensioner on to the water pump, fit the mounting bolt through the assembly, and torque the bolt to 34.5-44 lbf ft (46.5-60 Nm) 4.7-6.1 kgfm.

3. Refitment of the fan belt is the reverse of the removal procedure, but ensure the "Poly V" belt is positioned correctly onto all of the pulleys.

IDLER PULLEY

1. One or two idler pulleys are fitted to the vehicle, dependent on the model. One is fitted to the right hand side of the engine front cover, in front of the oil filler cap. The other, where air conditioning is fitted, is situated to the left hand side of the front cover close to the crankshaft, Figure 7.

2. Check that the idler pulley rotate freely, if tight or worn, replace with new. Removal and replacement is by the attaching bolts through the centre of the bodies. Torque the bolts to 34.5-44 lbf ft (46.5-60Nm) 4.7-6.1 kgfm.

WATER PUMP REMOVAL

1. Drain the cooling system.

2. Remove the radiator.

3. Loosen or lever the fan belt tensioner to ease the tension and remove the fan belt from the vehicle.

4. Withdraw the four bolts which pass through the water pump (4) and into the block and slide the pump forward and away from its rear connector (1), removing the two sealing 'O' rings (2), Figure 111.

5. Alternatively withdraw six bolts, four in the water pump and two in the pump to block connector and remove from the engine as a complete unit, discarding the gaskets (3), Figure 111.

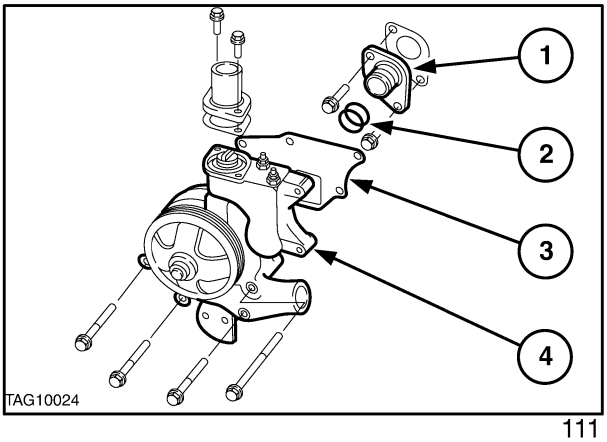

111

Disassembly

1. To remove the fan and clutch assembly hold the pump pulley in a fixed position, and placing an open ended spanner on the nut to the rear of the clutch assembly spacer, loosen the nut in a clockwise direction.

2. Using a puller Tool (1) No. 1002 or 9198 and a sleeve (2) slightly smaller than the pulley shaft, ease the pulley from its shaft, Figure 112.

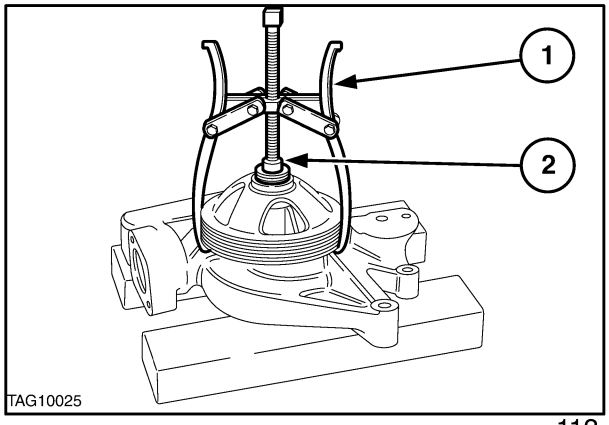

Water Pump Pulley Removal 112

1. Tool No FT 1002
2. Sleeve
3. Pump Body
4. Support

3. Using a pair of heavy snap ring pliers, remove the snap ring (1) from the rear of the pump body. Carefully ease out the backplate (2). Remove and discard the 'O' ring (3), Figure 113.

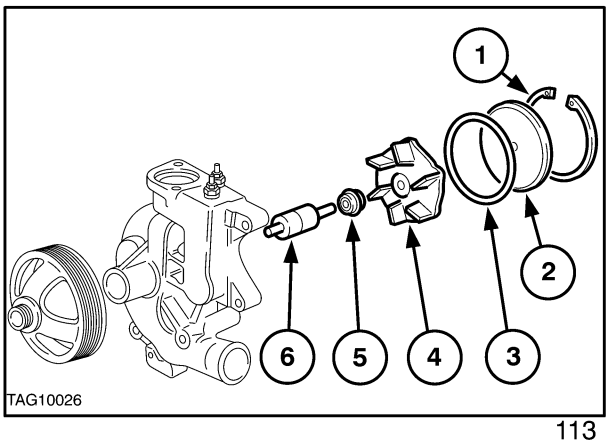

113

4. To remove the impeller/shaft assembly, place the pump body (3) impeller side down. Support the pump in a manner to allow the impeller diameter to drop clear of the pump as it is pressed out (1) from the pump body using the correct tool (2), Figure 114.

NOTE: *Apply pressure to the outer bearing race and shaft simultaneously to remove, using the correct tool. Do not press the centre shaft only as the shaft may move, leaving the outer bearing case in the pump body.*

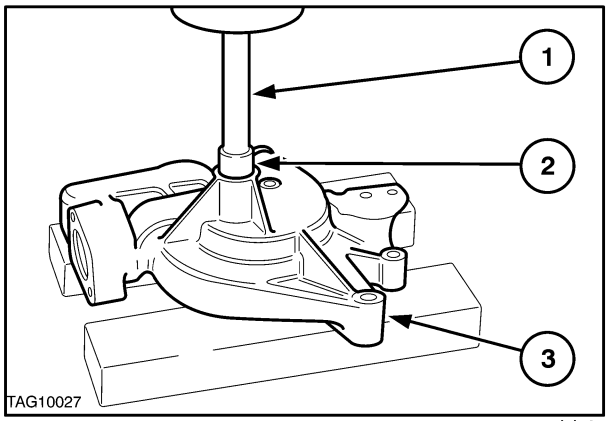

114

5. With the impeller/shaft assembly (3) removed from the pump, place the impeller (2) on supports (4) and press out the shaft (3) assembly from the impeller, Figure 115.

6. The seal assembly (5) attached to the bearing shaft (3) is not removable or serviceable. During the manufacturing process the seal is pressed onto the shaft and is destroyed on removal, this is to meet pre load conditions and maintain an effective water seal.

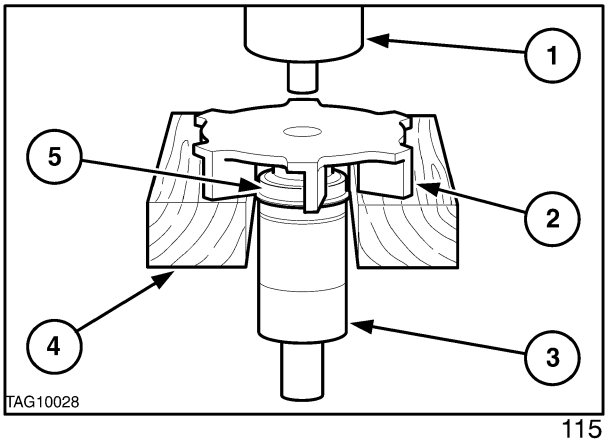

115

Inspection and Repair

1. Check the bearing shaft and seal assembly for signs of wear or leaks and if evident, the assembly must be replaced with new parts.

2. The impeller should be checked for worn or damaged vanes and must be replaced if not to an acceptable standard.

3. Clean and check the pump body for signs of cracks, erosion or leaks. If any of these faults are in evidence and likely to cause pump failure at a later date, the pump body must be repaired or replaced with a new one.

Re-Assembly

1. To install the bearing (2) into the pump body (3), place the body rear face down onto a flat surface. Install the bearing with the longer stepped end of the shaft (1) in the body and using a sleeve (4) that contacts the bearing outer race only, press (5) the bearing into the body. Once installed in the body the bearing case end face must be flush with the pump front face to within 0.000-0.006 in 0.00-0.076 mm). Reference "6", Figure 116.

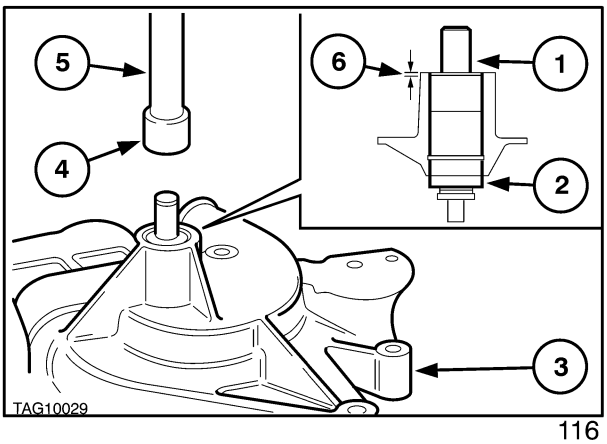

116

2. With the water pump (5) placed front face down and the shaft (1) supported, place the seal assembly (4) on the end of the shaft, with its smallest diameter uppermost. To insert the seal assembly place Tool No. FT6209 or 4672 (3) over the seal and press (2), until the lip on the seal body seats on the pump body, Figure 117.

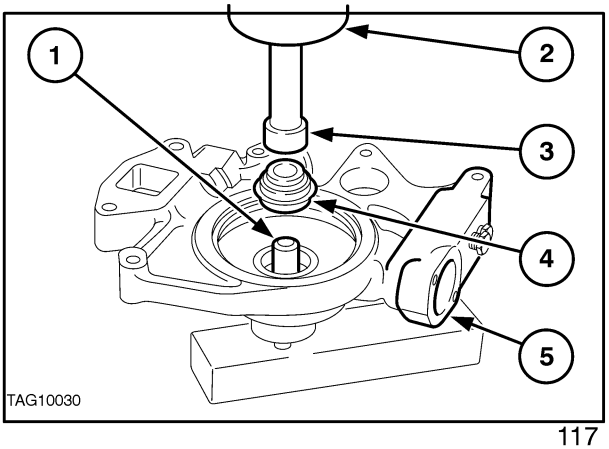

117

3. With the seal installed correctly the seal working height should be maintained at 0.470-0.490 in (11.9-12.4 mm), Reference "A", Figure 118.

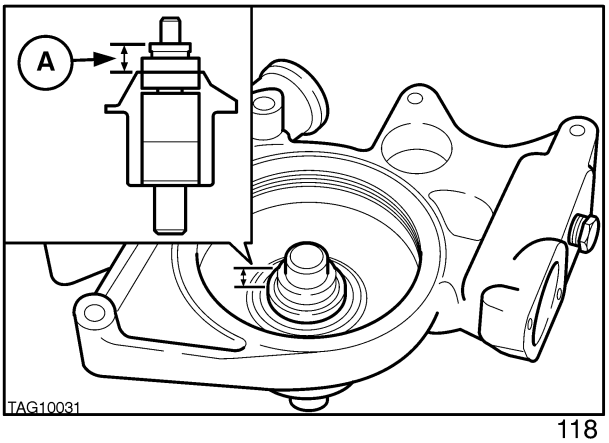

118

4. With the water pump rear face up (2) and the shaft (4) supported, place the impeller (3) over the shaft and press (1) the impeller into the water pump body. Installed correctly the face of the impeller fins to the operating face of the water pump should be 0.010-0.035 in (0.25-0.88 mm), Reference "A" Figure 119.

5. Check the dimension from the rear face of the impeller to the rear face of the pump. The dimension should be maintained at 0.46-0.485 in (11.6-12.2 mm), Reference "B", Figure 119.

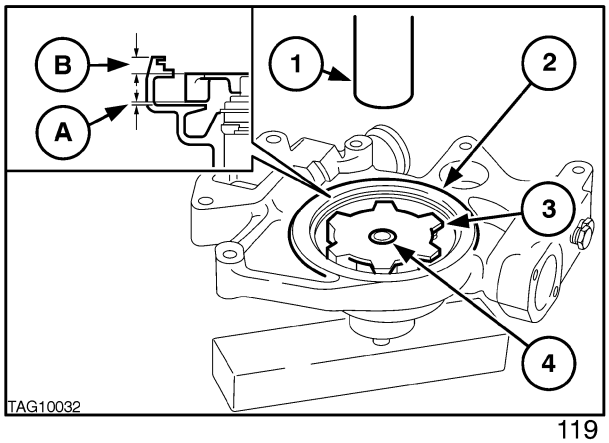

119

6. With the pump rear face down and the shaft supported, press the pulley onto the shaft ensuring that the pulley front face to the ear face of the pump dimension is, 5.091-5.101 in (127-129 mm), Reference "A" Figure 120

7. Ensure a new 'O' ring is fitted and place the water pump backplate in position, refitting the snap ring into its groove, Figure 10. Make sure the water pump pulley/impeller assembly rotates freely by hand prior to re-assembly. If not disassemble and recheck the relevant dimensions.

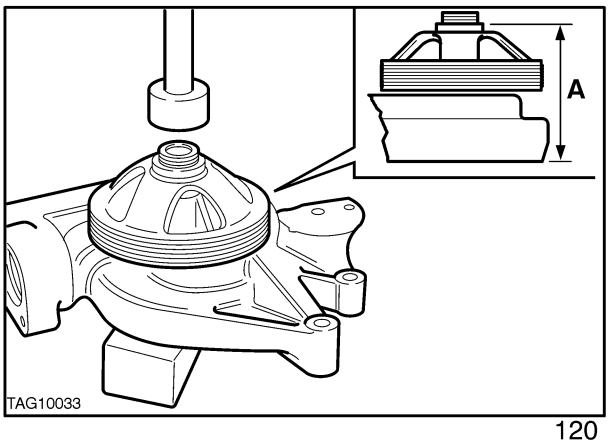

120

Installation

1. Installation of the water pump to the engine is the reverse of disassembly, but observing the following requirements.

Clean the block face and fit a new gasket (3) between the connector and block face, Figure 111, then torque the two bolts to 15-21 lbs ft (20-28 Nm) 2.0-2.9 kgfm.

Fit two new 'O' rings (2) over the connector outlet port (1) as required, Figure 121.

Place the water pump (4) over the connector and install and torque the four pump bolts to 45-50 lbs ft (61-68 Nm) 6.2-6.9 kgf m.

Ensure the fan belt tensioner pulley rotates freely and the swinging arm of the tensioner returns to rest freely. Gently lever the arm up to enable the fan belt to be seated in the grooves on the pulleys. Refit the fan blade assembly.

After installation of the radiator, refill the cooling system as previously described and run the engine checking for leaks.

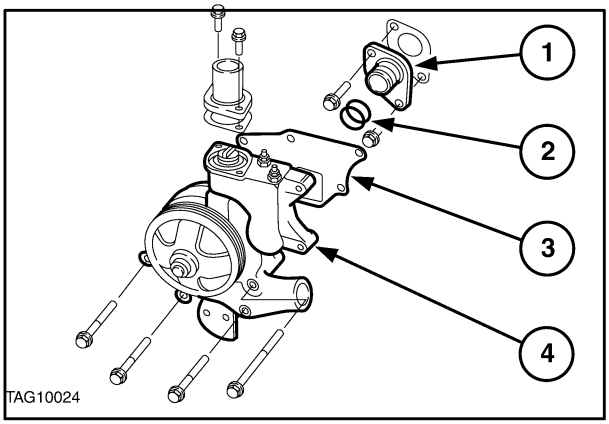

121

LUBRICATION

SPECIFICATIONS

Oil Pump

Rotor Clearance	0.025-0.15mm (0.001-0.006 in)
Rotor to Pump Housing Clearance	0.15-0.28mm (0.006-0.011 in)
Rotor End Play	0.025-0.089mm (0.001-0.0035 in)
Oil Pressure	1.24 bar (18 lb/in^2) minimum at idle speed, 2.76 bar (40 lb/in^2) minimum at rated speed
Pump Gear to Camshaft Gear Backlash	0.40-0.56mm (0.016-0.022 in)

Oil Filter Support

Relief Valve, Operating Pressure	4.0 bar (59 lbs in^2)
Flow Rate	68 litres/min (15 imp gals/min) 18 US gals/min

Oil Type

Temperature	Oil Viscosity and Type	API Classification	Engine Oil & Filter Change Period (hours)
-12°C (Below 10°F)	Low Ash , SAE 5W or Low Ash SAE 5W/20 or SAE 10W-30	CF-4/SG	150 150 150
-12°C to 4°C (10°F to 40°F)	Low Ash , SAE 10W Series 3 or SAE 10W-30	CF-4/SG	150 300
0°C to 32°C (32°F to 90°F)	Low Ash , SAE 30W Series 3 or SAE 10W-40	CF-4/SG	300 300
Above 24°C (75°F)	Low Ash , SAE 30W Series 3 or SAE 15W-40	CF-4/SG	300

When using diesel fuel with a sulphur content between 1% and 1.3% use only oils listed above but reduce the oil and filter change period to every 50 hours .

ENGINE OIL CAPACITIES (With Oil Filter)

Model	Litres	Imp Gals	U.S Gals
4 CYL	11.4	2.5	4.8

TORQUE VALUES

TORQUE VALUES - VARIOUS	Nm	lbf ft	Kgf m
Oil Pan Drain Plug	41	30	4.2
Oil Pump to Block	23	17	2.3
Oil Filter Adaptor Bolts	42	31	4.2
Oil Filter Mounting Bolt Insert	34	25	3.5
Oil Pressure Switch Assembly	31	23	3.2
Idler Pulley Bolt	54	40	5.5
Pump Connector to Block	24	18	2.4

SPECIAL TOOLS

DESCRIPTION	V.L. CHURCHILL TOOL No.	NUDAY TOOL No.	FNH TOOL No.
Adjustable Bridge Puller	518	9539	09539
Shaft Protectors	625-A	9212	09212
Step Plate Adaptors	630-S	9210	09210

DESCRIPTION AND OPERATION

LUBRICATION SYSTEM

Lubrication of the engine, figure 122, is maintained by a rotor type oil pump mounted in the rear of the engine block, behind the flywheel. The oil pump is driven from the rear of the camshaft and draws oil from the engine oil pan through a tube and screen assembly.

A spring loaded relief valve is integral with the oil filter body mounted on the left hand side of the engine block, and prevents over pressurisation of the system.

A spin on type oil filter is mounted externally to its support housing, on the left hand side of the engine. Oil flows from the filter to the main oil gallery, which runs the length of the cylinder block, which also intersects the camshaft follower chamber.

The main gallery also supplies oil to the crankshaft main bearings, connecting rods, big ends, small ends. The underside of the pistons and pins, are lubricated by oil pressure jets mounted adjacent to each main journal housing.

The camshaft drive gear bushing is pressure lubricated through a drilled passage from the front main bearing. The gear has small oil passages machined on both sides allowing excess oil to escape.

Timing gears are lubricated by splashed oil from the cam follower chamber, and the pressure lubricated camshaft drive gear bushing.

An intermittent flow of oil is directed to the valve rocker arm shaft assembly via a drilled passage in the cylinder block. This is located vertically above above No 1 camshaft bearing, and aligns to a hole in the cylinder head. The rotation of the camshaft allows a controlled intermediate flow of lubrication.

The turbocharger where fitted, is supplied with oil from the oil filter support housing, mounted on the left hand side of the engine.

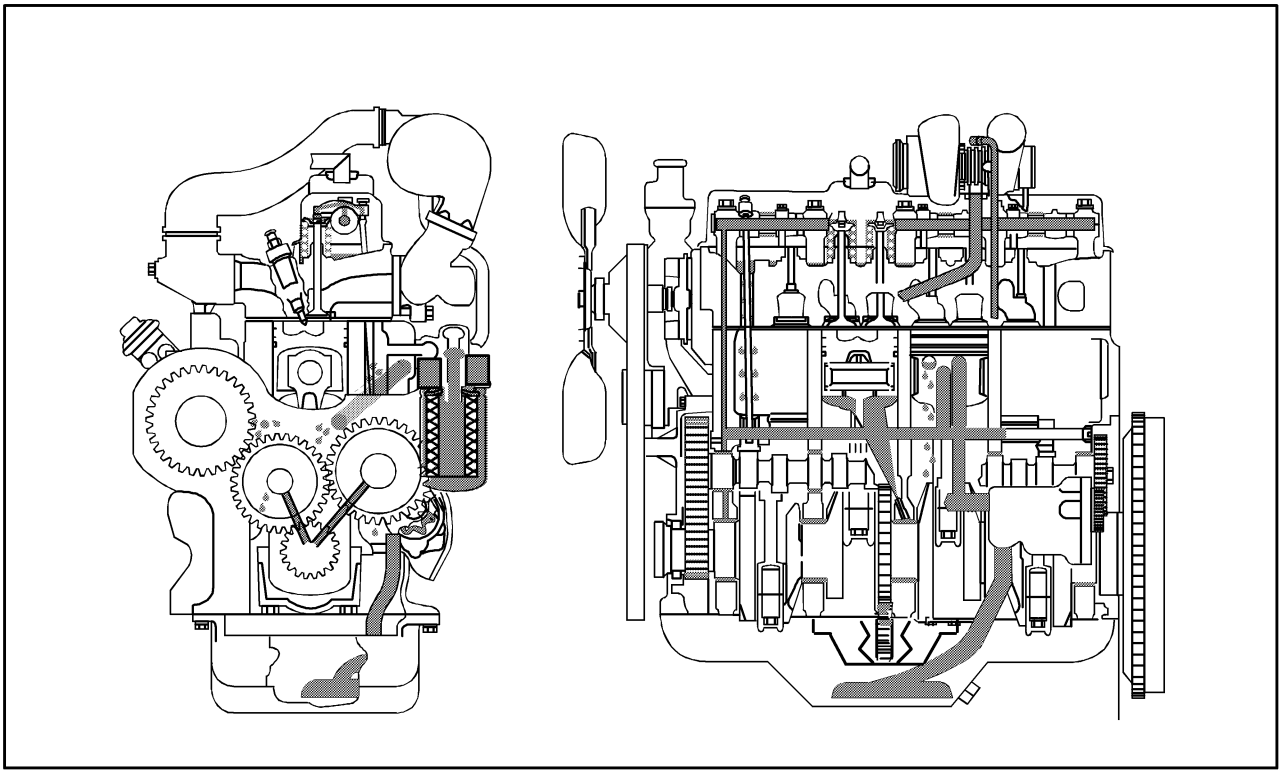

Engine Lubrication System With Turbocharger Fitted 122

Engine Oil Flow

FAULT FINDING

IMPORTANT: *When effecting a repair the cause of the problem must be investigated and corrected to avoid repeat failures.*

The following table lists problems and their possible causes with recommended remedial action.

PROBLEM	POSSIBLE CAUSES	REMEDY
Oil pressure warning light fails to operate	1. Bulb burnt out	1. Renew bulb
	2. Warning Light pressure switch faulty	2. Renew pressure switch
	3. Warning light circuit faulty	3. Check and renew wiring
Engine knocks	1. Diluted or thin oil	1. Check crankshaft bearings for damage, change as required. Drain and refill with specified oil and renew filter. Ascertain cause of dilution
	2. Insufficient oil supply	2. Check oil level and top up as necessary. Overhaul or renew pump as necessary. Check oil filter is not clogged
	3. Low oil pressure	3. Overhaul pump or relief valve as necessary
	4. Excessive timing gear backlash	4. Install new thrust bearing liner
Engine overheats	1. Oil cooler tube blocked	1. Check free flow
Excessive oil consumption	1. Engine oil level too high	1. Reduce oil level
	2. External oil leaks	2. Renew gaskets and seals, where necessary. Check mating surfaces for damage or distortion
	3. Worn valves, valve guides or bores	3. Renew
	4. Cylinder head gasket leaking	4. Renew gasket. Check head for damage or distortion
	5. Oil loss past the pistons and rings	5. Renew rings and/or rebore/ re-sleeve block as necessary
	6. Oil cooler leak	6. Repair/renew oil cooler assembly
	7. Blocked rocker cover filter	7. Replace filter
	8. Damaged rocker cover or breather pipe	8. Repair damage

PROBLEM	POSSIBLE CAUSES	REMEDY
Low oil pressure	1. Engine oil level low	1. Top up, as necessary
	2. Wrong grade of oil	2. Drain and refill with correct grade of oil
	3. Blocked oil filter	3. Replace filter
	4. Oil pump drawing air	4. Repair leak
	5. Blocked oil pump sump screen	5. Clean pump screen
	6. Oil pressure relief valve faulty	6. Fit new relief valve
	7. Oil pump worn	7. Renew Oil Pump
	8. Excessive oil pump rotor and shaft assembly clearance	8. Overhaul pump
	9. Excessive main or connecting rod bearing clearance	9. Install new bearings inserts and / or re-grind crankshaft

OIL PUMP OVERHAUL

NOTE: *The oil pump can only be removed with the engine split from the transmission, and the flywheel, back plate, engine oil pan, and oil pump tube removed.*

1. Prior to pump removal check pump gear to camshaft gear backlash, does not exceed, 0.40-0.56mm (0.016-0.022 in).

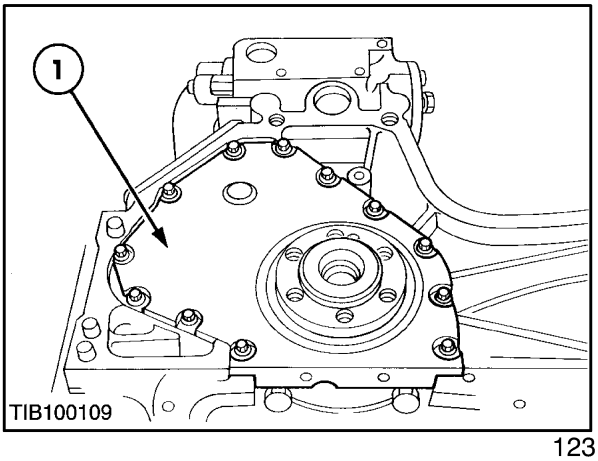

123

2. Loosen and remove the camshaft gear, to expose the oil pump, detach the 3 pump mounting bolts, and withdraw the pump from the block.

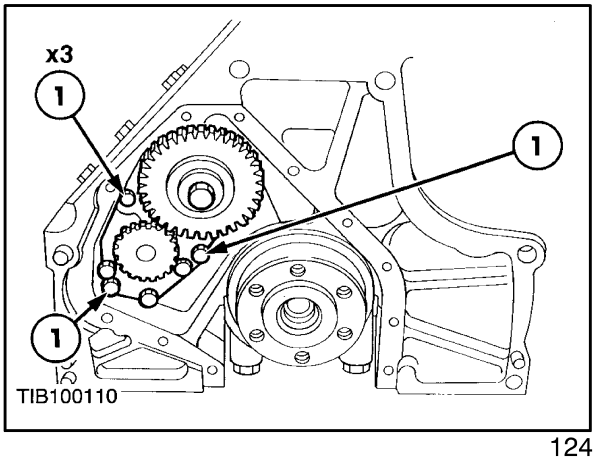

124

Disassembly

1. Loosen and remove the pump face plate to body bolts (1). Disassemble the pump and discard the O-rings (2).

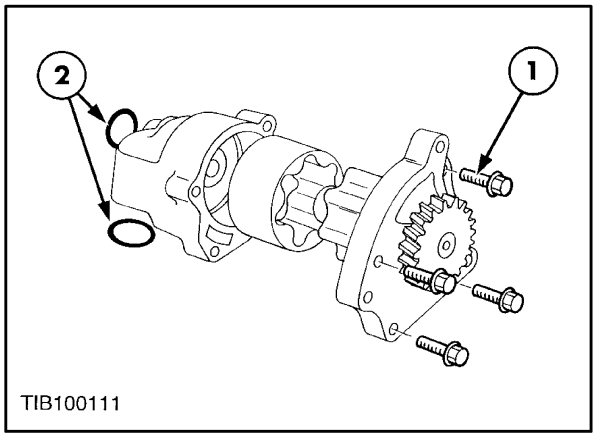

125

Inspection and Repair

1. Wash all parts in a suitable solvent and inspect inside of pump plate, and body, for excessive wear or damage. If visually okay check in the following manner.

2. Invert pump plate/rotor assembly, and place outer rotor over inner rotor. Placing a ruler (1) across top of both, slide a feeler gauge (2), between ruler and inner rotor, to 0.025-0.089mm (0.001-0.0035 in).

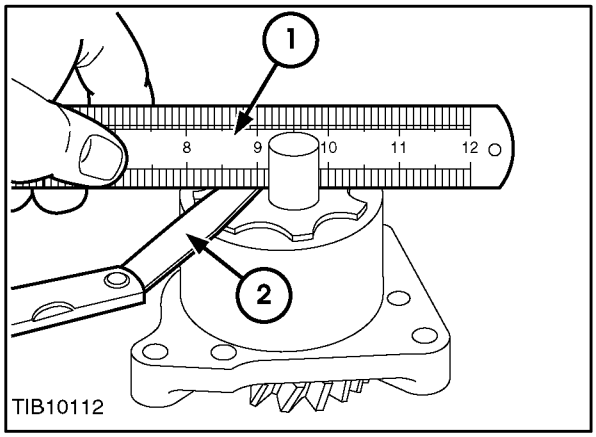

126

NOTE: *If not to specification replace the oil pump, as reduced pump pressure through wear could result in reduced engine life.*

3. Place outer rotor in pump body and check clearance, by inserting a feeler gauge (1) between the rotor and body. Check to a max of 0.55mm (0.022 in). If exceeded a new pump is required.

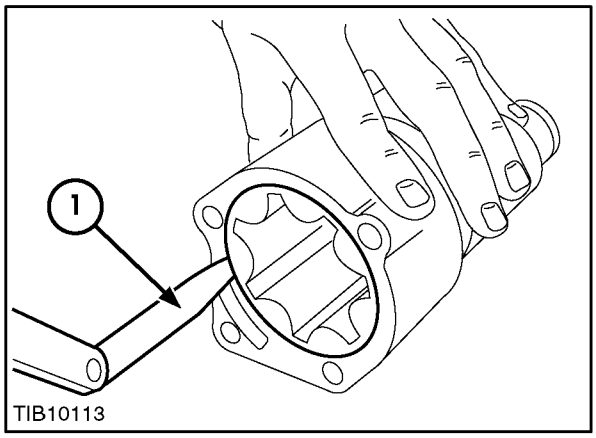

127

Installation

1. Clean and coat parts in new engine oil. Place outer rotor in pump body, and ensure free rotation. Insert inner rotor, and pump plate assembly, into the body and ensure that shaft is fully seated into bushing.

2. Assemble the front plate to the body bolts,and torque to,
23.0-28.4Nm (17-21 lbf ft) 2.3-2.9kgf m.

IMPORTANT: *After tightening ensure the drive gear rotates freely by hand, at least 5 revolutions, if not "disassemble" and repeat the exercise.*

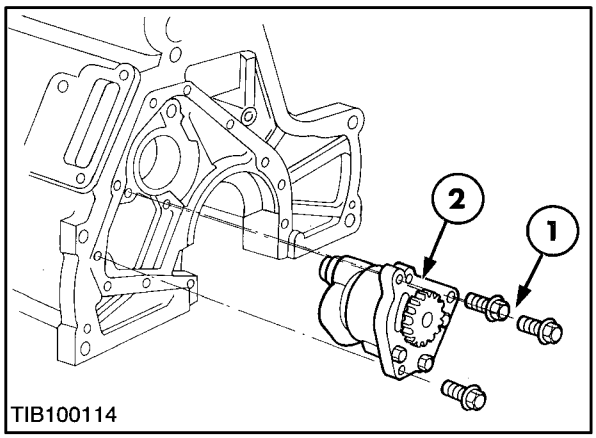

128

3. Fit a new O-Ring to the output tube, lubricate and insert the pump into the block tightening to, 23.0-28.4Nm (17-21lbf ft).

4. Fit a new O-Ring into suction port. Lubricate and insert tube/screen assembly (1) into pump through bottom of engine. Fitting a new gasket (2), torque the attaching bolts (3) to, 27-34Nm (20-25 lbf ft).

5. Refit gears and check backlash as previously described, refer to chapter 1.

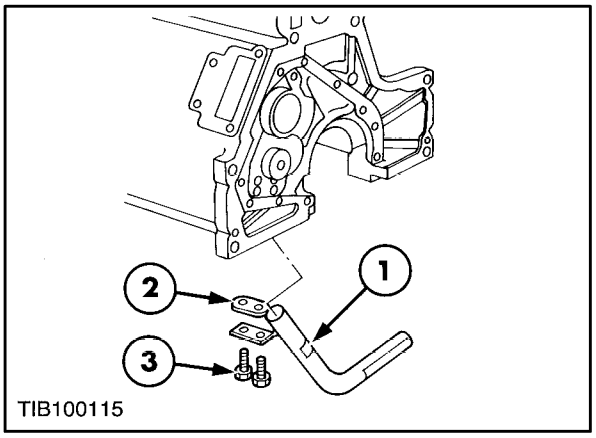

129

6. Ensure the engine backplate is fitted correctly and the bolts are torqued up in sequence. Refer to chapter 1.

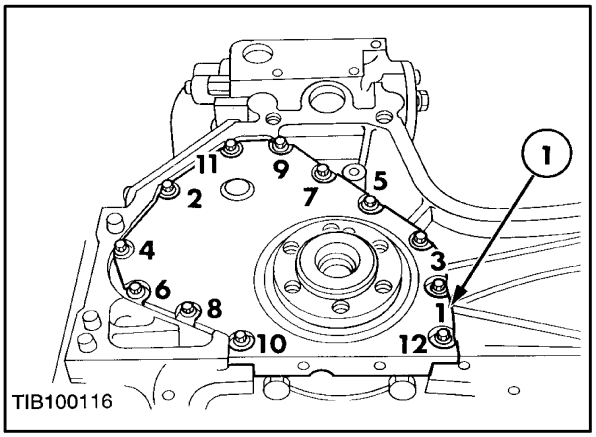

130

Oil Filter Support Assembly

Removal

1. Unscrew and discard the old filter. Loosen the 4 attaching bolts and oil connections and remove the filter support assembly from the block. Discarding the O-Rings.

2. Clean the filter support in a suitable solvent.

3. Remove pressure relief valve plug (3), removing valve (1) and spring (2). To ensure correct operation of the pressure relief valve, check spring length,
Free length = 52.8mm (2.08 in).
Compressed length = 37.0mm (1.46 in) using a weight of 15.6 kgs (34.3 lbs).

4. Check the parts for damage, wear, and replace as necessary. Failure to do so could result in premature wear to the engine, due to oil bypassing the filter and returning back to the system.

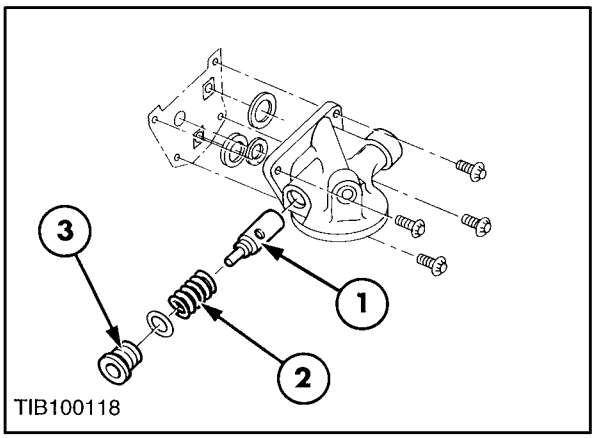

131

Installation

1. Lubricate the pressure relief valve and spring and insert into housing, ensuring free movement.
   Fit a new 'O'-Ring to the plug and torque to, 55N m (42 lbf ft).

NOTE: *On some models including the turbocharged version the pressure relief valve "end plug" is replaced by an oil return tube from the engine block. Where this pipe is fitted a plug is used to blank the oil return port to the engine block.*

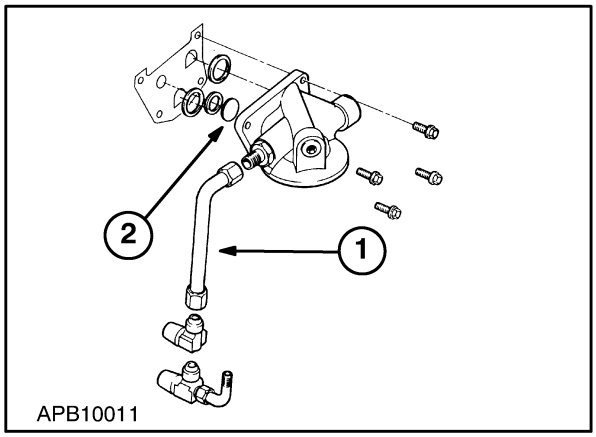

132

2. Fit tube (1) to the connector and torque to 27Nm (20 lbf ft).

3. Refit the oil filter head to the engine block with new O-rings (2) and plug where required as above and torque the bolts to, 34-47Nm (26-35 lbf ft)

FUEL GENERAL

SPECIFICATIONS

Turbocharger type:	Garrett T250
LUCAS C.A.V. pump	
Type	DPS or DPS 200 Series, integral speed governor and advance device

Fuel System - General	MODEL				
	8×2	16×4	12×12	24×24	16×16
Fuel Tank Capacity	130 litres 28 imp. galls 34 U.S. galls		160 litres 35 imp. galls 42 U.S. galls		
Fuel Filter Type	Single Disposable Element and Separator				
Fuel Filter Change Interval	600 hours	600 hours	600 hours	600 hours	600 hours
Injector Nozzle Opening Pressure	DPS = 240–250 bar (3480–3590 lbs in^2)		DP200 = 290 – 300 bar (4230–4350 lbs in^2)		
Reset at	225 bar (3260 lbs in^2)		–275 bar (–3990 lbs in^2)		
Injection Pump Type	DPS Distributor	DPS Distributor	DP203 Distributor	DP203 Distributor	DP203 Distributor
Pump Rotation Firing Order	Clockwise 1342	Clockwise 1342	Clockwise 1342	Clockwise 1342	Clockwise 1342
Injector Change Interval	1200 hours	1200 hours	1200 hours	1200 hours	1200 hours
Maximum No-Load Speed	2320 (except TS110 Turbo = 2220)				
Idle Speed ± 50	750	750	750	750	750
Rated Speed	2170 (except TS110 Turbo = 2070)				

TORQUE VALUES

DESCRIPTION	N·m	ft. lbs.	kgf/m
Throttle Cable Locknuts	50	37	5.1
Throttle Lever Stop Bolt Locknut	10	7	1.0
Fuel Tank Strap Retaining Nut	2.5	1.8	0.25
Fuel Tank Strap Locknut	25	18	2.5
Fuel Tank Shutoff Valve	14	10	1.4
Fuel Tank Leak-Off Elbow	14	10	1.4
Leak-Off Pipe to Elbow	24	18	2.4
Thermostart Plug	37	27	3.8
Thermostart Pipe Union	10	7	1.0
Leak-Off Pipe to Injector Line	24	18	2.4
Fuel Tank Sender Retaining Screws	2.5	1.8	0.25
Fuel Filter Element Retaining Bolt	10	7	1.0
Fuel Filter Retaining Bolts	30	22	3.1
Exhaust Muffler Retaining Clamp	35	26	3.6
Air Cleaner Retaining Bolts	55	40	5.6
Air Cleaner Hose Clamps	2.5	1.8	0.25
Air Cleaner Restriction Indicator Switch	12	9	1.2

DESCRIPTION AND OPERATION

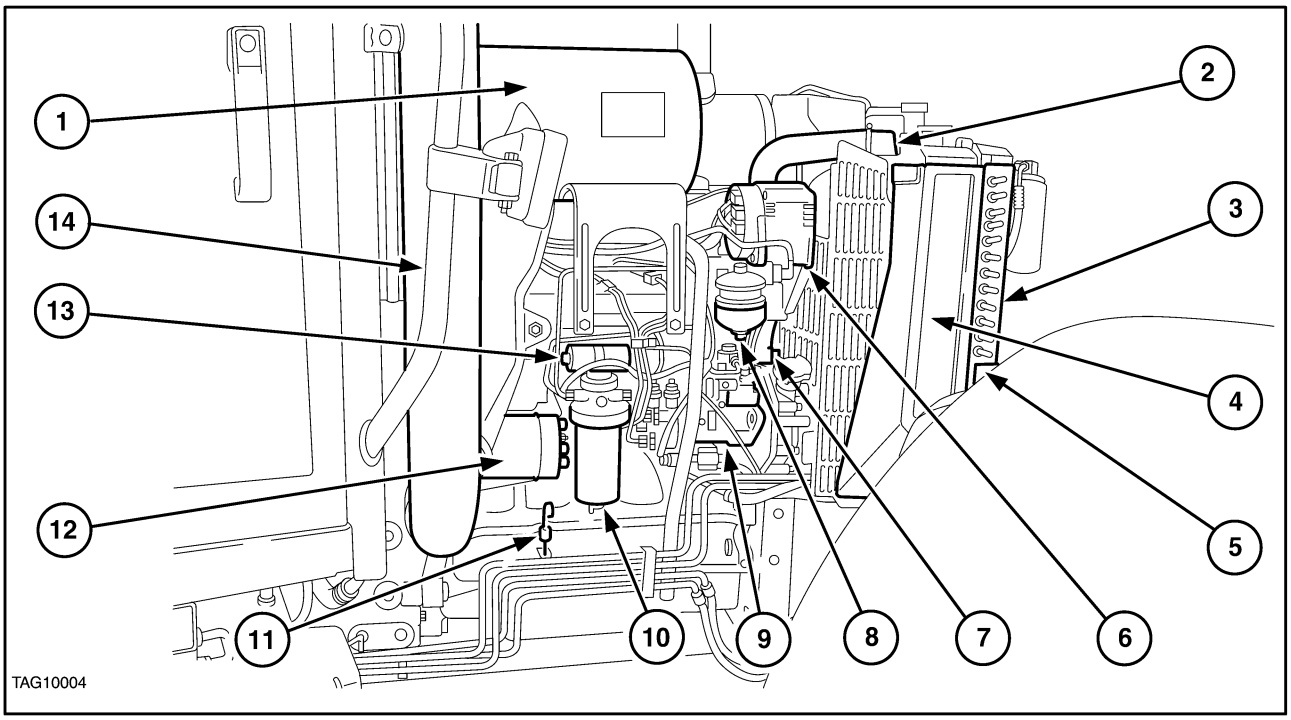

Right Hand View of Engine - Emisionised Engine 133

5. Air Filter
6. Coolant Recovery Tank
7. Air Conditioning Condenser (where fitted)
8. Coolant Radiator
9. Hydraulic Oil Cooler
10. Alternator
11. Water Pump
12. Fuel Sedimentor Separator
13. Fuel Injection Pump - Emisionised
14. Fuel Filter
15. Engine Oil Dipstick
16. Starter Motor
17. Electric Fuel Pump
18. Cold Start

FUEL SYSTEM

The diesel fuel system consists of a fuel tank, mechanical or electric lift pump, fuel filter/sediment separator, D.P.S or D.P.S. 200 series fuel injection pump, fuel injectors and inter-connecting fuel lines. A dry type air cleaner removes dirt and contaminants from the air intake.

DPS

The fuel is drawn from the fuel tank by a mechanical lift pump which pumps fuel into the sediment separator. The fuel is then drawn from the sediment separator to the fuel injection pump inlet via the fuel filter by means of the vacuum created by the transfer pump which forms an integral part of the fuel injection pump.

DP203

The fuel is drawn from the fuel tank, through the sediment separator and fuel filter by the electric lift pump, and then fed into the injector pump.

The transfer pump delivers fuel to the injection pump to supply fuel at high pressure to each injector and also provides extra fuel which lubricates and cools the injection pump. This extra fuel is recirculated via a fitting on the fuel injection pump governor control housing to the fuel tank by means of the injector leak-off line.

On all models the excess fuel that leaks past the needle valve of the injectors is directed back into the fuel tank at the filler neck by means of the injection leak-off line.

FUEL TANK

All models have a ”Plastic” fuel tank located on the left of the vehicle below the driver platform. The tank is vented through the breather and has a lockable filler cap (1).

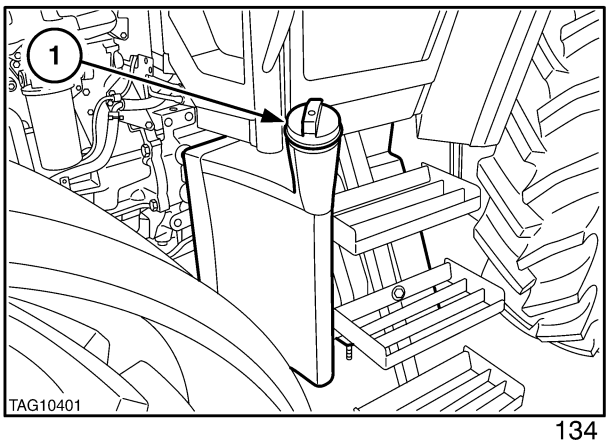

134

LIFT PUMP ELECTRIC EMISSIONISED ENGINE ONLY

Mounted on the right hand side of the engine above the fuel filter is an electrical lift pump (1). The pump draws fuel through the sediment separator (2) and the fuel filter (4). The fuel is then pressurised and fed into the fuel injection pump.

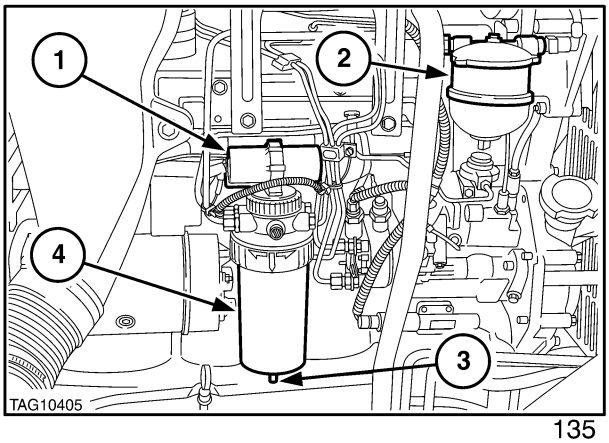

135

SEDIMENT SEPARATOR

Positioned on the right hand side of the engine is the fuel sediment separator. The assembly consists of a cast head which is bolted to the engine, and a glass sediment separator.

The fuel is fed into the sediment separator side of the head to be directed down and around the edges of the separator cone, the larger particles of dirt and water (which are heavier than fuel oil) are separated out and sink to the collecting bowl. The cleaned fuel is then fed into the fuel filter.

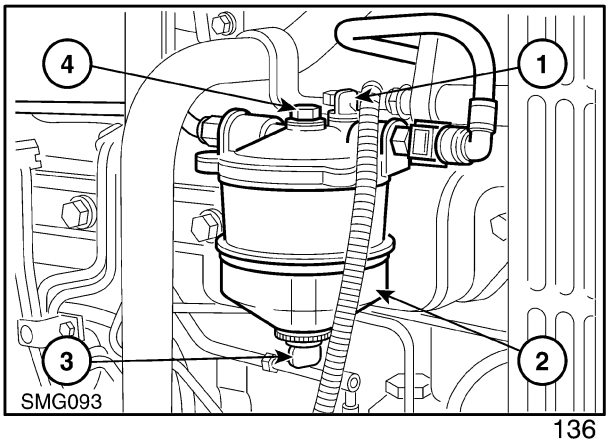

136

FUEL FILTER

The filter (3) positioned on the right hand side of the engine behind the fuel pump directs the fuel through the filter head (2) to be directed down through the filter paper (3) into the base chamber. The filtered fuel then flows up the center tube of the element to the filter head outlet and flows onto the injection pump.

The drain plug (2) permits contaminated fuel to be drained from the filter.

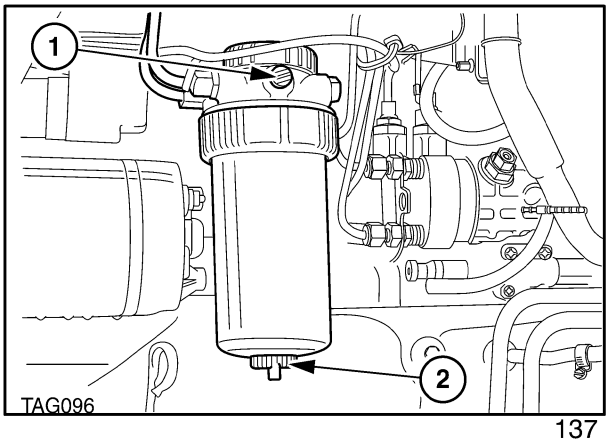

137

THERMOSTART

To aid engine starting in cold weather conditions, a thermostart system incorporating an integral reservoir system is available on all models.

The thermostart system is made up of a plug assembly screwed into the intake manifold, a fuel line connected to the injector leak-off tube and an electrical circuit, connected to the ignition switch.

The plug assembly consists of a check valve and electrically heated element.

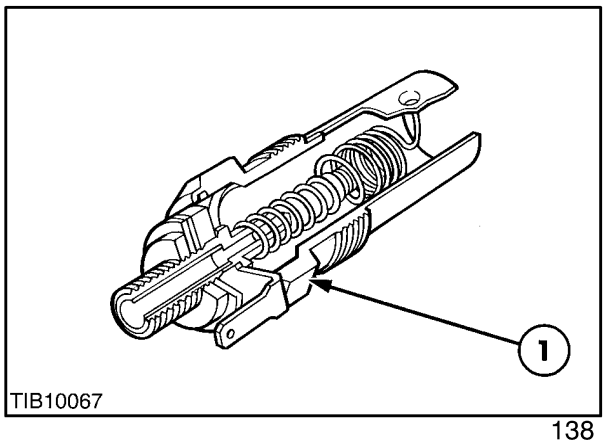

138

Fuel is gravity fed to the plug assembly and, when operating the key start/stop switch and the thermostart switch, the heater and "igniter" coils are both energized. The "heater" coil opens a check valve which allows diesel fuel to flow through the thermostart. The fuel is ignited by the "igniter" coil in the manifold, heating the intake manifold air prior to it entering the combustion chamber.

When the thermostart switch is released to the off position, the electrical current is disconnected from the thermostart and the check valve closes.

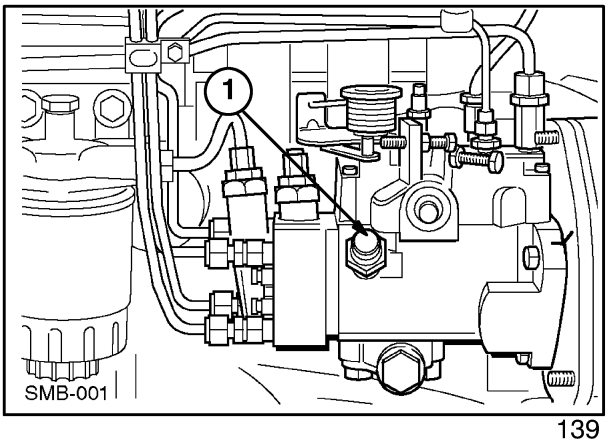

139

FUEL PUMP

The fuel injection pump fitted to these vehicles is either the Lucas/CAV DPS (non emissionised), Figure 139, or DP203 (emissionised), Figure 140, type. The fuel pump which is fed by either an electric lift pump or draws fuel into itself via the transfer pump, supplies fuel at high pressure to the fuel injectors.

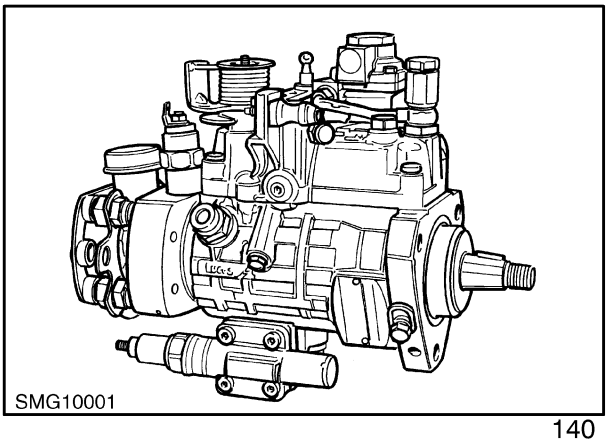

140

INJECTORS

The fuel injectors mounted in the cylinder head supply fuel in the form of a spray pattern into the cylinder bores. The controlled amounts of fuel ensure optimum engine performance throughout the operating range.

Emissionised and non emissionised injectors have different characteristics and are not interchangeable.

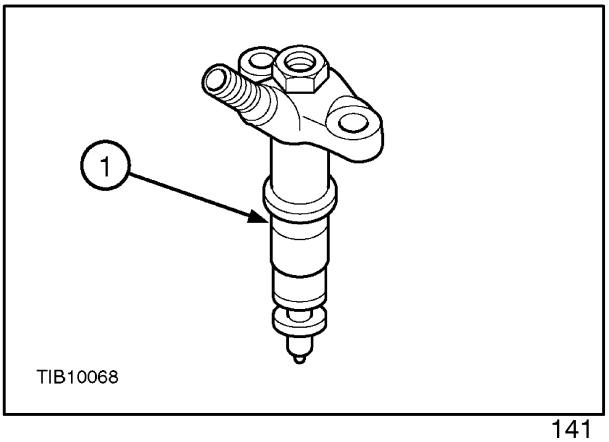

141

FAULT FINDING

DIESEL ENGINES

IMPORTANT: *Whenever making a repair, the reason for the cause of the problem must be investigated and corrected to avoid repeat failures.*

The following tables list problems and their possible causes with recommended corrective action.

GENERAL

PROBLEM	POSSIBLE CAUSES	CORRECTION
Fuel not reaching injection pump	1. Restricted fuel filters	1. Check and flush the fuel filters clean.
	2. Air in system	2. Bleed the fuel filters.
	3. Fuel leakage	3. Check the fuel lines and connectors for damage.
Fuel reaching nozzles but engine will not start	1. Low cranking speed	1. Check the cranking speed
	2. Incorrect throttle adjustment	2. Check the throttle control rod travel
	3. Incorrect pump timing	3. Check the pump timing
	4. Fuel leakage	4. Check the fuel lines and connectors for leakage
	5. Faulty injectors	5. See injector troubleshooting
	6. Low compression	6. Check the engine compression
Engine hard to start	1. Low cranking speed	1. Check the cranking speed
	2. Incorrect pump timing	2. Check the pump timing
	3. Restricted fuel filters	3. Replace filters
	4. Contaminated fuel	4. Check for water in the fuel
	5. Low compression	5. Check the engine compression
	6. Air in system	6. Check for air leaks on the suction side of the system
Engine starts and stops	1. Fuel starvation	1. Check and flush clean restricted fuel lines or fuel filters
	2. Contaminated fuel	2. Check for water in the fuel
	3. Restricted air intake	3. Check for restrictions in the air intake
	4. Engine overheating	4. Check cooling system
	5. Air in system	5. Check for air leaks on the suction side of the system

PROBLEM	POSSIBLE CAUSES	CORRECTION
Erratic engine operation (surge, misfiring, poor governor regulation)	1. Fuel leakage	1. Check the injector lines and connectors for leakage
	2. Fuel starvation	2. Check and flush clean restricted fuel lines or filters
	3. Incorrect pump timing	3. Check the pump timing
	4. Contaminated fuel	4. Check for water in the fuel
	5. Air in system	5. Bleed the fuel system
	6. Faulty or sticking injector nozzles	6. See injector troubleshooting
	7. Incorrect engine timing	7. Check for faulty engine valves
Engine emits black smoke	1. Restricted air intake	1. Check for restricted air intake
	2. Engine overheating	2. Check cooling system
	3. Incorrect timing	3. Check the pump timing
	4. Faulty injectors	4. See injector troubleshooting
	5. Low compression	5. Check the engine compression
	6. Incorrect engine timing	6. Check the engine valves
Engine does not develop full power or speed	1. Incorrect throttle adjustment	1. Check for insufficient throttle control movement
	2. Incorrect maximum no-load speed	2. Check maximum no-load speed adjustment
	3. Fuel starvation	3. Check and flush clean restricted fuel lines and filters
	4. Air in system	4. Check for air leaks on the suction side of the system
	5. Incorrect timing	5. Check pump timing
	6. Low compression	6. Check engine compression
	7. Incorrect engine timing	7. Check for improper valve adjustment or faulty valves

ADJUSTMENTS FUEL INJECTION PUMP

PRIMING THE FUEL SYSTEM

NOTE: *The fuel system should be primed whenever fuel system components are removed or disconnected in order to expel any air in the system.*

1. Make sure there is sufficient fuel in the tank and all connections are tight.

2. Operate key start switch to activate the electric fuel pump. An audibel difference is dectectable when the system is primed, this may take up to 5 minutes.

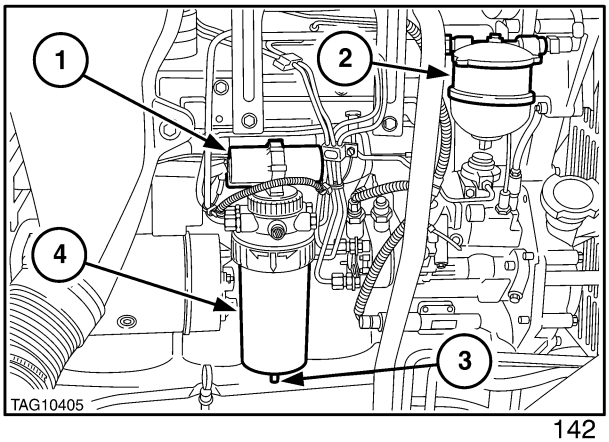

142

NOTE: The bleed screw (1) Figure 11 in the filter head is on the intake side and must be kept closed during priming.

3. Operate the hand primer on the filter head, to pump fuel into the filter assembly. Continue to pump the hand primer until resistance is felt, indicating that the system is pressurised (primed).

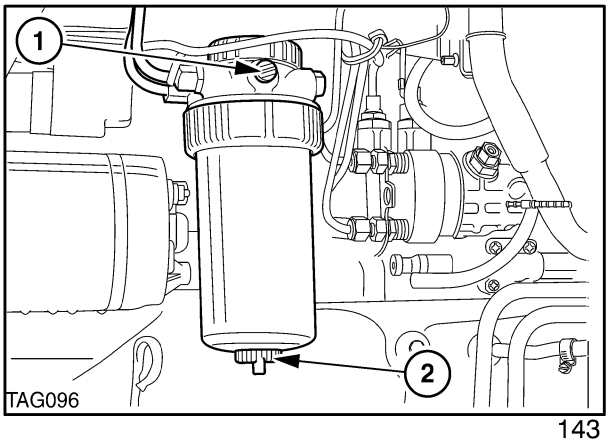

143

NOTE: *Attempt to start the engine. If it does not start, continue through Step 5.*

4. With the throttle in the maximum no-load speed position, operate the starting motor to crank the engine. The fuel injection pump is self-venting and does not require bleeding.

IMPORTANT: *Do not crank the starting motor continuously for more than 60 seconds as doing so may cause starting motor failure.*

5. If the engine fails to start after 60 seconds, repeat the priming procedure outlined above.

6. Run the engine and check for leaks.

NOTE: *Turbocharged engines only - The high operating speed of the turbocharger makes it essential that adequate lubrication is assured when the engine is started. Therefore, idle the engine at 1000 RPM for one minute before driving the tractor.*

IDLE SPEED ADJUSTMENT (ALL ENGINES)

1. With the engine running and at normal temperature, disconnect the throttle cable at the injection pump.

2. Loosen the locknut and adjust the idle speed stop screw (1) until the specified idle speed of 700–800 RPM is obtained. Tighten the locknut and reconnect the throttle cable.

3. Operate the throttle lever several times and check that the idle speed is correct. If excessive free play is felt in either the foot or hand throttle after adjustment, proceed to "Throttle Linkage Adjustments" in this section.

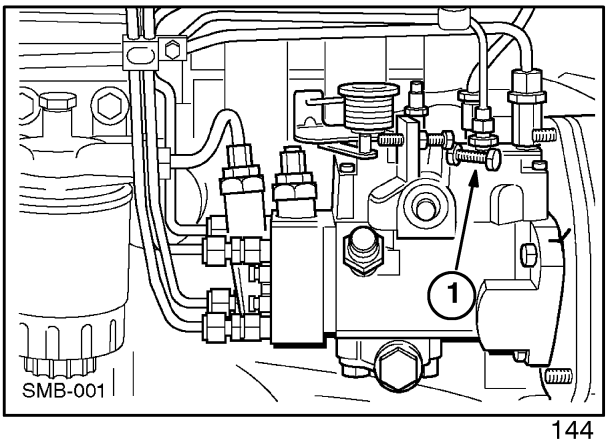

144

MAXIMUM NO-LOAD SPEED ADJUSTMENT (ENGINES WITH DPS NON EMISSIONISED ONLY)

IMPORTANT: *The maximum no-load speed screw is adjusted and sealed at the factory for correct fuel delivery and maximum no-load speed. If the maximum no-load speed is above or below the specification , adjustment may be made as follows:*

1. With the engine running and at normal operating temperature, disconnect the throttle cable at the injection pump.

2. Cut and remove the maximum no-load speed stop screw sealing wire and remove the locking sleeve.

3. Set the throttle lever at the injection pump in the maximum no-load speed position, then loosen the locknut and adjust the screw (1) until the specified maximum no-load speed is obtained. Tighten the locknut, and secure the adjustment with a new sealing wire and locking sleeve.

4. Be sure the throttle cable can be reconnected to the injection pump and adjust the cable length if necessary, see "Throttle Linkage Adjustments" later in this section.

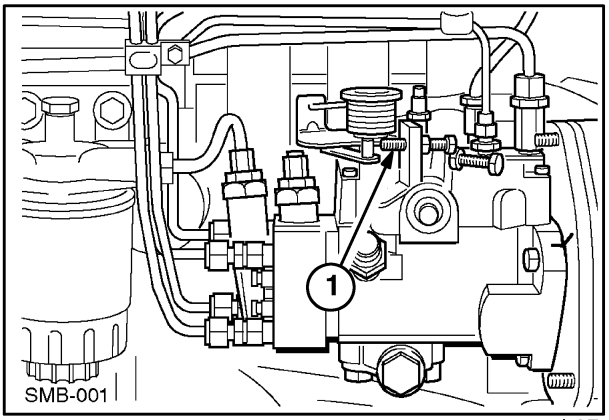

145

5. Reconnect the throttle cable and recheck the maximum no-load and idle speeds using the hand and foot throttles. If the maximum no-load or idle speeds cannot be obtained, proceed to “Throttle Linkage Adjustments.”

Foot Throttle Cable Replacement and Adjustment

A single cable directly from the foot pedal operates the fuel pedal lever.

7. Raise the engine hood

8. Remove the cable retaining clip (1) and pull the rubber adjusting nut from its support.

9. Remove the right hand instrument console lower panel and remove the clip retaining the cable to the foot throttle linkage (1), Figure 147

10. Remove the cable from the engine side.

11. Installation is the reverse of removal.

Adjustment

12. Adjust the cable at the injection pump. Figure147, to remove all slack at the idle position. Depress the pedal fully and ensure that full throttle is achieved. If not achieved adjust the stop bolt, (2) Figure 147, on the pedal to allow further movement. If full throttle is achieved too early in the pedal movement again adjust the pedal stop to coincide with injection pump full throttle.

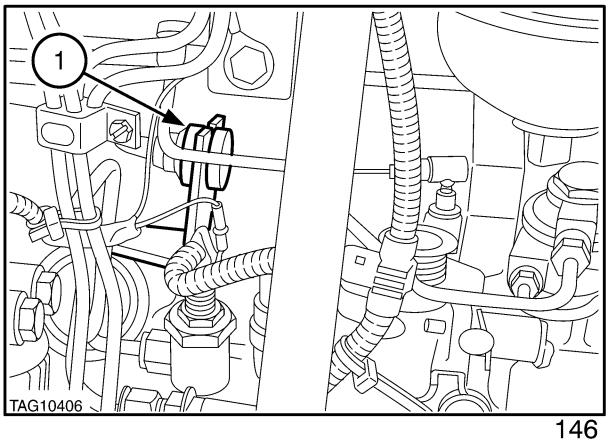

146

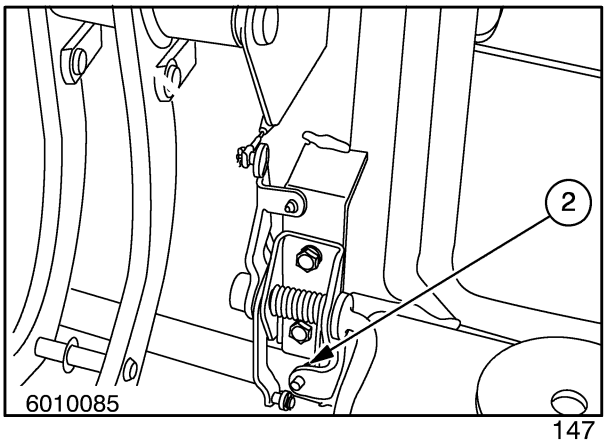

147

Hand Throttle Cable Replacement and Adjustment

A single cable from the hand lever attaches to a pivot plate at the foot pedal assembly. This actuates the injection pump, via the foot throttle cable.

1. Remove the transmission lever console lower panel. Remove the clip retaining the cable to the lever, (1) Figure 148, and slacken the outer cable adjusting nuts (2) and (3) Figure 148, and slide the cable from the bracket.

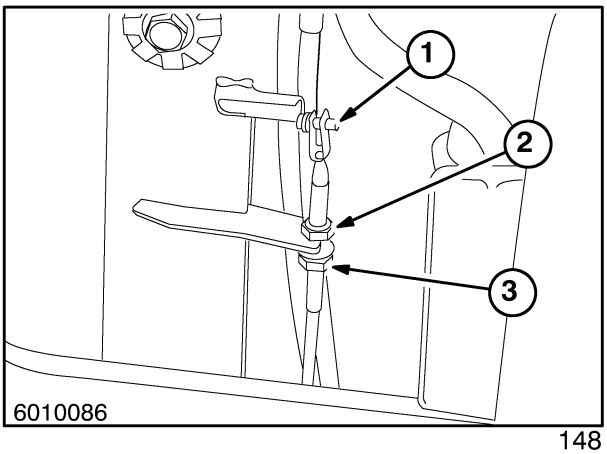

148

2. Remove the right hand instrument console lower panel and remove the clip retaining the cable to the pivot plate (1) Figure 149.
3. Remove the cable from the tractor.
4. Installation is the reverse of removal.

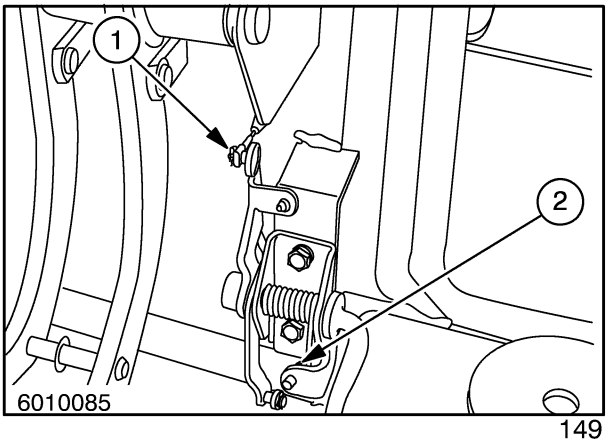

149

Adjustment

1. Ensure that the foot throttle cable is correctly adjusted as described above. Adjust the hand throttle cable, using the two outer cable nuts, to remove all slack from the cable when in the idle position. Ensure that there is a slight clearance between the hand throttle pivot plate and the foot throttle assembly.

FUEL TANKS, FILTERS AND FUEL LINES OVERHAUL

FUEL TANK Removal

NOTE: *Prior to removing the fuel tank from the tractor, first determine the quantity of fuel left in the tank. It will be necessary to drain the tank of fuel.*

1. Disconnect the battery, ground lead first.

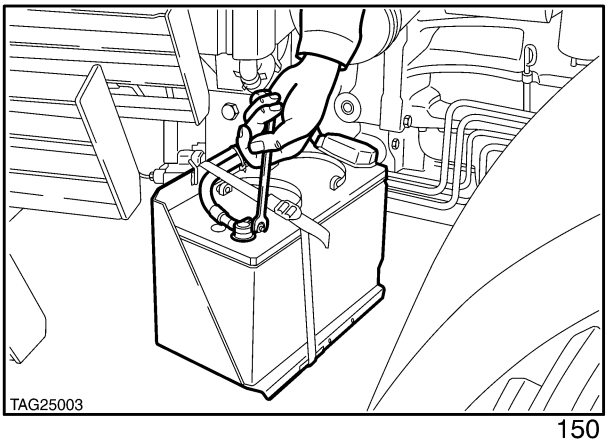

150

Fuel Tank Removal

1. Remove left hand cab step. Lower rung.
2. Disconnect sender wiring from rear of tank.
3. Disconnect the two quick release fuel lines at the engine to transmission buckle up point.
4. Loosen the front and rear tank retaining strap nuts and unclip straps.
5. Remove the two tank support brackets. (Remove 'R' clips and withdraw clevis pins)
6. Lower tank to ground and withdraw from vehicle.
7. Plug the exposed pipes to prevent contamination.

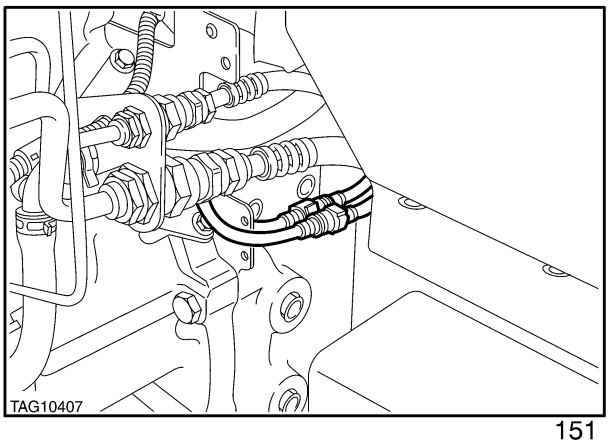

151

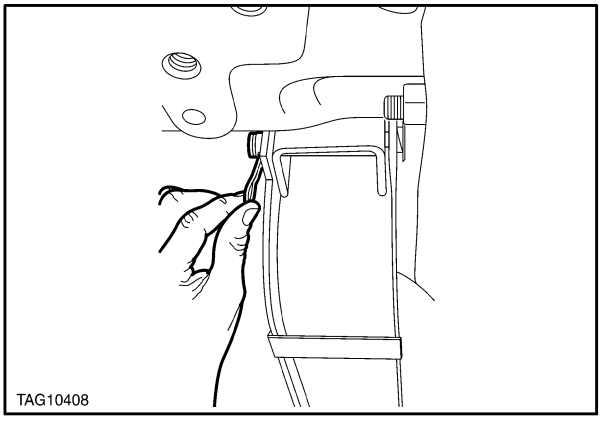

152

Installation

Reinstall the fuel tank to the tractor and secure.

Connect the fuel line.

Fill the tank with approximately 22.7 Litres (5 gallons) 6 US gallons of diesel fuel and check for leaks. If leakage occurs determine cause and correct.

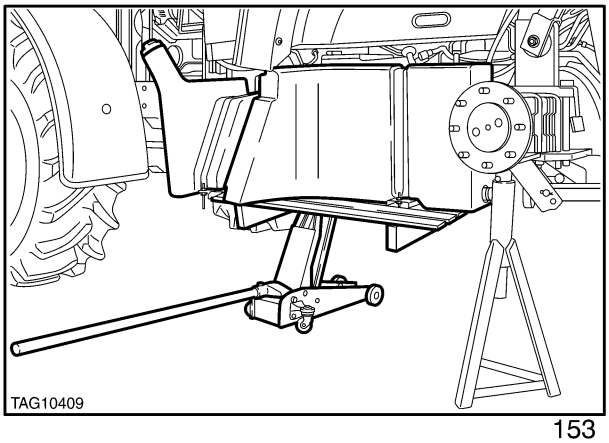

153

FUEL FILTER/SEDIMENT SEPARATOR

Removal

1. Drain the filter and sediment separator of fuel, by removing the bowl retaining nut (3).
2. Disconnect and remove the fuel lines from the head of the filter/sediment separator assembly and plug the exposed openings to prevent contamination.
3. Remove the retaining bolts, then remove the assembly from the tractor.

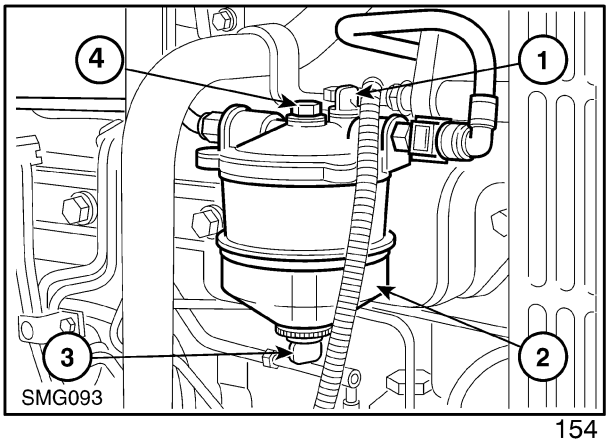

154

Disassembly

1. Remove the center retaining bolts and separate the filter components.

2. Using clean fuel, wash out the filter bowl and the glass bowl on the sediment separator.

Reassembly

Reassembly of the fuel filter/sediment separator follows the disassembly procedure in reverse. On reassembly, observe the following requirements:

1. Install a new filter element and sealing rings, be sure the sealing rings are correctly positioned.

2. Tighten the center retaining bolts.

Installation

Installation of the fuel filter/sediment separator assembly follows the removal procedure in reverse. On installation, observe the following requirements:

1. Tighten the retaining bolts.
2. Assemble the fuel pipes to the connectors in the head and tighten the nuts until the stop is reached (metal to metal contact).
3. Bleed the fuel system as previously described.

AIR CLEANERS

SPECIFICATIONS

AIR CLEANER

Type	Dry, Dual Element
Change Interval	600 hours (or more frequently when operating in adverse conditions)
Type	Oil Bath
Service Interval	10 and 50 hours
Oil Type	API CF-4 15G

TORQUE VALUES

DESCRIPTION	ft. lbs.	N·m	kgf/m
Air Cleaner Retaining Bolts	40	55	5.6
Air Cleaner Hose Clamps	1.8	2.5	0.25
Air Cleaner Restriction Indicator Switch	9	12	1.2

DESCRIPTION AND OPERATION

DRY AIR CLEANER

The tractors feature a dry element type air cleaner located beneath the engine top hood panel.

Air enters the cleaner in a circular direction and centrifugal force results in heavier particles being thrown to the outside of the container and collecting in the bottom of the cleaner. The lighter particles are collected on the (outer) primary element.

The inner (secondary) element is located within the outer element. The element protects the engine from the finer dust particles that may have passed through the outer element.

A vacuum indicator switch is mounted in the air cleaner outlet tube and illuminates a warning light on the instrument console when the air cleaner requires servicing.

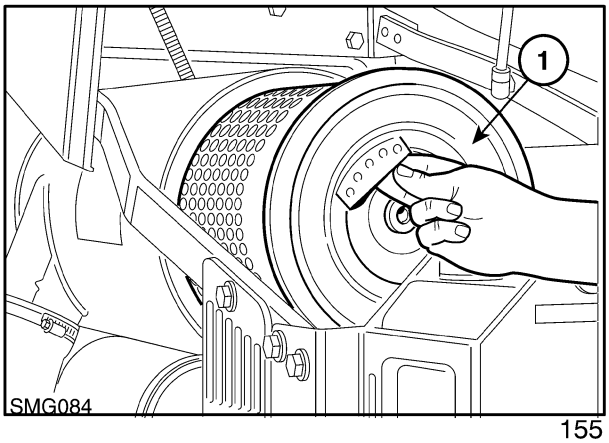

155

If the air cleaner restriction warning light illuminates when the engine is running, stop the engine and service the air cleaner.

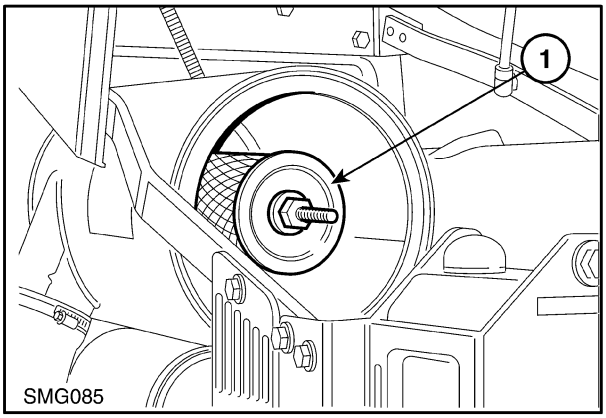

156

IMPORTANT: *The safety element must be replaced if damaged or clogged with dust, or if, after cleaning or installing a new outer element, the warning light remains on when the engine is running.*

If the warning light remains on after installation of both inner and outer elements, check the switch for faulty operation by replacing with a switch known to function correctly.

PRE CLEANER

The pre cleaner where installed removes large particles of debris.

IMPORTANT: The air cleaner will only fulfill this function if it is correctly and regularly maintained. A poorly maintained air cleaner will mean loss of power, excessive fuel consumption and a reduction in engine life.

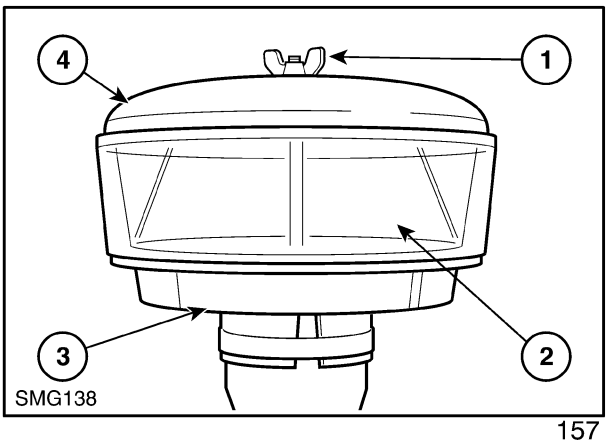

157

FAULT FINDING

PROBLEM	POSSIBLE CAUSES	REMEDY
Air Cleaner Warning Light illuminates	1. Clogged Air Cleaner	1. Clean or renew outer element
Air Cleaner Warning Light illuminates, after filter service	1. Vacuum Switch Faulty	1. Replace switch with a new one

OVERHAUL

REMOVAL (AIR FILTER ELEMENT)

1. Raise the engine hood.

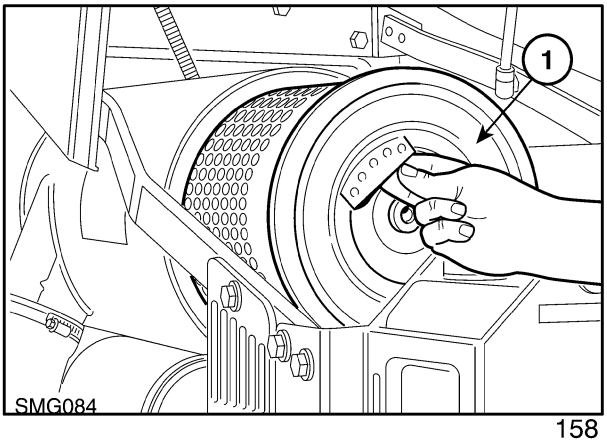

158

DISASSEMBLY

2. Remove the wing nut and extract the outer element.

3. With the outer element removed extract the inner element (1).

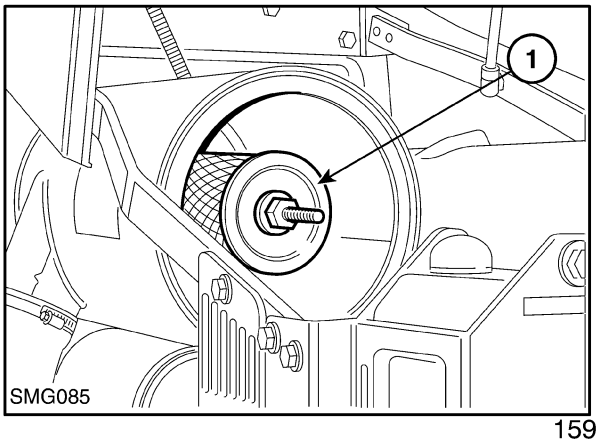

159

INSPECTION AND REPAIR

1. Clean and examine the outer canister. Repair any damaged seams.

2. Check the condition and fit of the rubber dust collector.

3. If dust is present inside the outer element, it must be replaced. If satisfactory, clean the element.

4. Wearing safety goggles and using compressed air not exceeding 2 bar (29 lbf/in^2) clean the element. Insert the air line nozzle inside the element and blow the dust from the inside to the outside. Blow loose particles from the outside of the element by holding the nozzle at least 150 mm (5.9in) from the element.

5. If undamaged, wash the element every 300 hours or after five dry cleanings, whichever occurs first, using the following procedure:

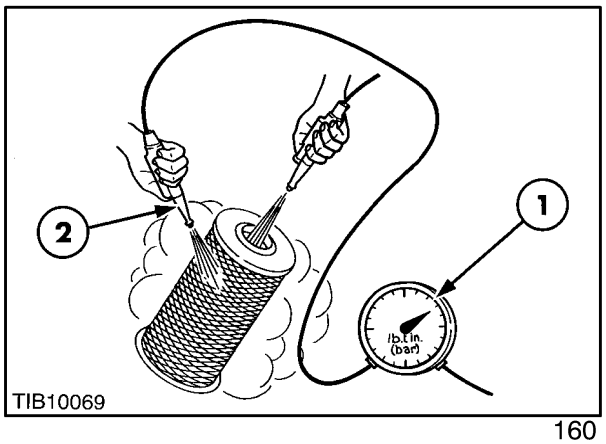

160

IMPORTANT: *Never use fuel oil, solvent, or water hotter than the hand can stand, otherwise the element may be damaged.*

A. Seal the small hole at the closed end of the filter with a strip of adhesive tape and place the filter, open end up, in a deep flat-bottomed container or tub. Add a small amount of non-sudsing washing powder (automatic washing machine type) to the inside of the filter element. Add warm water35° C (100° F) to the inside of the element until the level in the container is just below the open end of the element. Allow the element to soak for at least 15 minutes (but never more than 24 hours) in the cleaning solution.

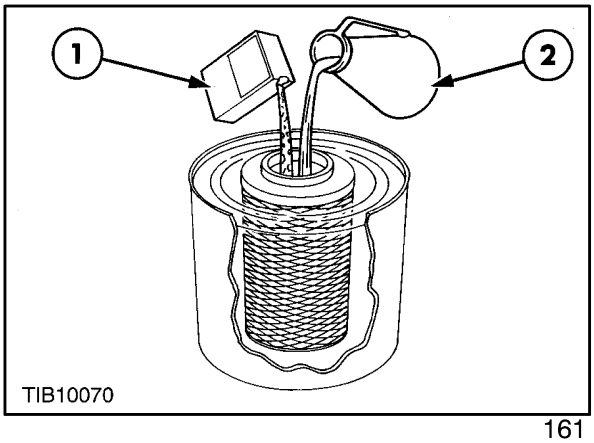

161

B. After soaking, gently agitate the element, being careful not to allow dirty cleaning solution from the container to splash into the inside of the element.

C. Rinse the element in clean cold water, allowing water to flow from the inside through the element until the water comes through clear. If using a hose do not use a pressured flow, a slow trickle is sufficient. Make sure water is allowed to flow through the entire element.

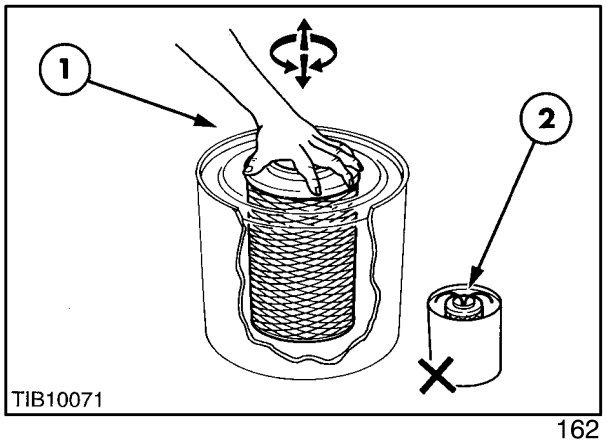

162

D. Remove the adhesive tape and shake excess water from the filter element and allow to dry naturally. The element will need 24-48 hours to dry thoroughly. Install a new element at this stage, retaining the washed element for the next service.

IMPORTANT: *Do not attempt to dry the element with compressed air or install before thoroughly dry as it may rupture. It is recommended that a new element is installed at this service and the washed element allowed to dry and retained for installation at the next service.*

6. When dry, check the element for damage by inserting a lamp into the middle of the element and observing the element surface. An even, fine pattern of light indicates the element is clean, undamaged and suitable for further service.

7. Every 600 hours the element must be replaced.

INSTALLATION

Installation of the dry type air cleaner is the removal procedure in reverse, on installation observe the following requirements:

8. Tighten the retaining bolts.

9. Tighten the outlet hose clamp.

REASSEMBLY

Reassembly of the dry type air cleaner is the disassembly procedure in reverse.

On reassembly, make sure the outer element sealing ring is secure.

ELECTRIC LIFT PUMP

SPECIFICATIONS

Type	Filter head mounted 12 volt supply Electric Lift Pump
Pump operation	Mechanically Actuated
Output Pressure at 2000 revs/min	0.27-0.47 bar (3-6 lbs in^2)

DESCRIPTION AND OPERATION

The electric lift pump is installed on all models fitted with the DP203 fuel injection pump engines.

The pump (1) is mounted into the head of the fuel filter and is activated via the key-start switch.

The fuel is drawn up from the tank through he separator and filter assemblies and then out to the FIP inlet.

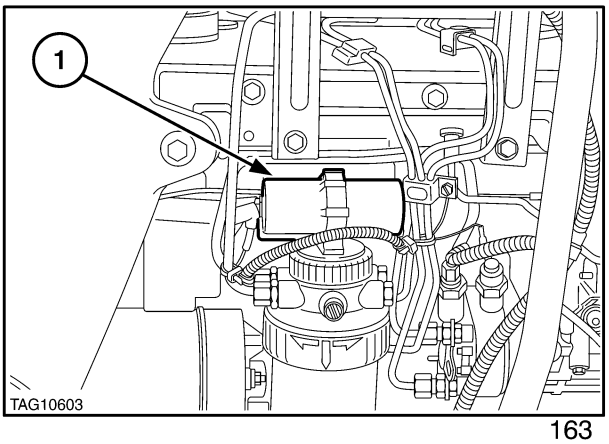

163

1. If there is no/little delivery, and voltage and fuel are present at the pump, the pump should be replaced.
2. With the key start on is there 12V between the terminals of the pump (1)? If 12V is not present check fuses, relay and wiring.

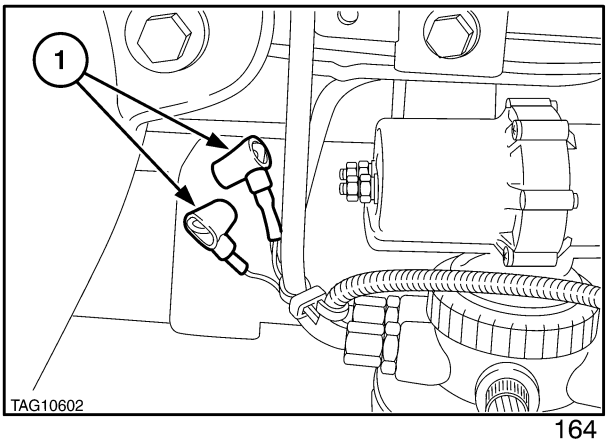

164

Removal of Electric Pump

1. Disconnect battery
2. Remove the two wires from the pump.
3. Unscrew the filter head/pump assembly connection and lift away from filter assembly.

Installation is reverse procedure, ensure 'O' rings (1) are serviceable

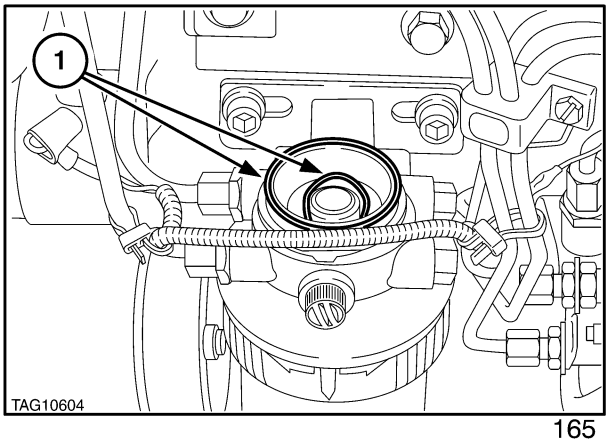

165

Pump Testing

Fuel pump may be checked on the vehicle.

Ensure initially that the filter is serviceable and there are no other restrictions between the fuel tank and filters.

Disconnect the filter outlet to pump tube and reconnect to the filter, allowing the outlet to be positioned into a suitable measuring jar.

Turn the key start to the first position for a measured amount of time and record the fuel delivered.

Compare against specification

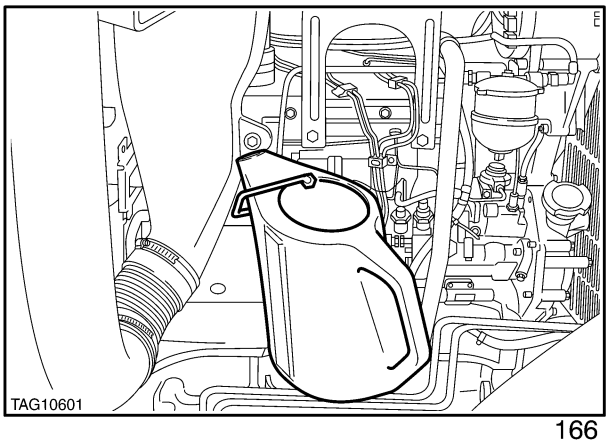

166

FAULT FINDING

PROBLEM	POSSIBLE CAUSES	CORRECTION
Low pressure at pump outlet	1. Low or no fuel in tank 2. Blocked filter in lift pump 3. Actuating Shaft Worn 4. Pump Worn	1. Refill tank 2. Clean filter 3. Replace Shaft 4. Replace Pump
Air in the fuel from pump outlet	1. Blocked fuel tank breather 2. Loose fuel connections 3. Fuel Pump Diaphragm Perforated 4. Fuel pump body seam Leaking 5. Pump Worn	1. Clear blockage 2. Check and tighten 3. Replace Pump 4. Replace Pump 5. Replace Pump

INJECTORS

SPECIFICATIONS

INJECTORS	LUCAS C.A.V.
Adjustment	Variable
Quantity, nozzle holes	5 Hole
Pressure Setting	240-250 bar (3480-3590 lbs in^2) (non emissionized). 290-300 bar (4230-4350 lbs in^2) (emissionized)
Injector change interval	1200 hours

TORQUE VALUES

Application	Nm	ft. lbs.	kgf/m
Injector Nozzle Retaining Nut	48	35	4.9
Injector Retaining Bolts	22	17	2.2
Injector Leak-Off Line Banjo Bolts	12	10	1.2
High Pressure Gland Nuts at Injector	32	23	3.3
High Pressure Gland Nuts at Fuel Pump	33	23	3.3

TOOLS

Application	VL CHURCHILL TOOLS	NUDAY TOOLS
Injector Nozzle Nut Socket	CT9009	8126
Nozzle Reverse Flush Adaptor	CT9024	8124
Injector Cleaning Kit*	DX730	1720
Tallow	Obtain Locally	Obtain Locally
Polishing Sticks	Obtain Locally	Obtain Locally
Timing Gauge	NH 01338	
Timing Gauge	PD67-2	
Timing Fixture	PD67-3	

*Kit consists of:

Nozzle Cleaning Wires - Pressure Chamber Drills - Pressure Chamber Scraper - Valve Seat Scraper - Brass Wire Brush - Pin Vise.

Description and Operation

The engine injector function is to inject fuel into a pressurized cylinder in a fully atomized condition so as to burn efficiently with a minimum of smoke.

Each injector consists of a nozzle assembly, containing a needle valve, and an injector body assembly housing the injector needle valve regulating spring.

Fuel from the fuel injection pump enters the injector fuel inlet and passes down through a drilling in the injector body to the needle valve seat.

The fuel, pressurized by the injection pump, lifts the needle valve off the seat against the action of a spring. The fuel is then forced, in an atomized state, through the five holes in the nozzle tip. When the pressure from the injection pump drops, the needle valve snaps back onto the seat under pressure from the spring.

To provide lubrication of the injector, a small amount of fuel is permitted to leak up between the needle valve and the nozzle body. The excess fuel rises to the top of the injector and returns to the fuel tank via an injector leak-off line.

FAULT FINDING

PROBLEM	POSSIBLE CAUSES	CORRECTION
Engine emits black smoke	1. Faulty injectors	1. Overhaul or replace injectors
Nozzle does not “buzz” while injecting	1. Dirty or sticking needle valve 2. Valve seat leakage 3. Damaged nozzle retaining nut	1. Clean or replace needle valve and nozzle holder 2. Clean or replace valve and nozzle assembly 3. Replace retaining nut
Nozzle leak back	1. Worn needle valve 2. Dirty nozzle and/or holder 3. Loose nozzle retaining nut	1. Replace needle valve and nozzle holder 2. Clean or replace nozzle and holder 3. Tighten nut
Nozzle opening pressure incorrect	1. Adjusting nut loose 2. Damaged nozzle or seized needle valve 3. Blocked nozzle holes 4. Incorrect shims fitted	1. Tighten nut 2. Replace needle valve and nozzle holder 3. Clean nozzle 4. Adjust shim pack
Nozzle seat leakage	1. Dirty nozzle and/or nozzle holder 2. Sticking needle valve	1. Clean or replace nozzle and nozzle holder 2. Clean or replace needle valve and nozzle holder
Incorrect spray pattern	1. Dirty nozzle and/or nozzle holder 2. Restricted nozzle holes 3. Damaged needle valve or nozzle	1. Clean or replace nozzle and nozzle holder 2. Clean or replace nozzle and nozzle holder 3. Replace needle valve and nozzle holder

OVERHAUL

1. Loosen the high pressure fuel pipe gland nuts at the injection pump.
2. Clean the area around the injectors.
3. Remove the banjo bolts (3) and discard the two copper washers from each bolt. Remove the leak-off pipe (1).
4. Unscrew the gland nuts and disconnect the high pressure pipes (2) from the injectors.
5. Remove the two retaining bolts from each injector and withdraw from cylinder head.
6. If a replacement set of injectors is not immediately available, cover the ends of the pipes and the cylinder head openings to prevent the entry of dirt and foreign material.
7. Discard the cork dust washer (2) and the copper sealing washer (3).

NOTE: *The copper sealing washer may have to be extracted from the bore in the cylinder head.*

8. To establish if overhaul or replacement is necessary, test the injectors according to the following procedure. Before testing, install a protective cap to the inlet union and clean the outside of the injectors with a soft wire brush and a carbon solvent.

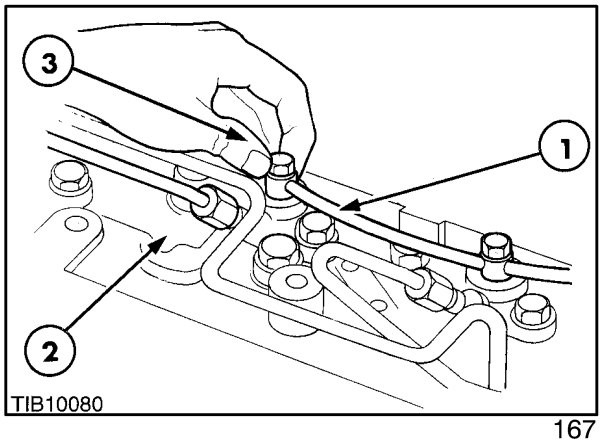

167

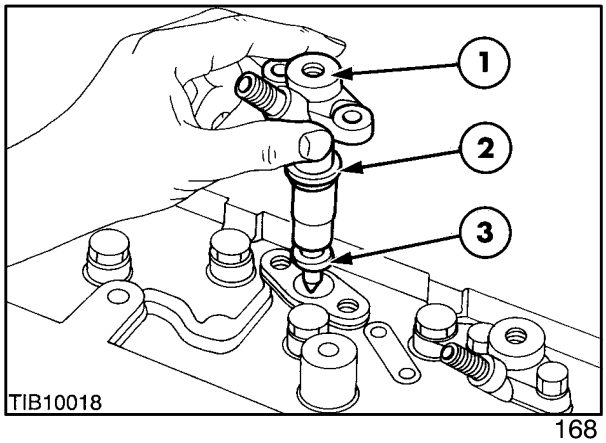

168

TESTING

WARNING: *The spray from a fuel injector tester can pierce human skin with fatal results. When an injector is spraying, the nozzle holder should be turned away from the operator and any other persons.*

During the Nozzle Opening Pressure and Spray Pattern Tests, collect the spray in a container partly filled with rags to absorb the spray.

When conducting the Nozzle Seat Leakage Test, release the injector tester pump pressure before touching the nozzle tip with a sheet of blotting paper.

WARNING: *The spray is flammable make sure no open flames are in the area of the tester and do not generate excessive vapor.*

1. Fill the injector tester with a calibrating type fuel oil and leave the filler cap loose to prevent a vacuum forming during testing.

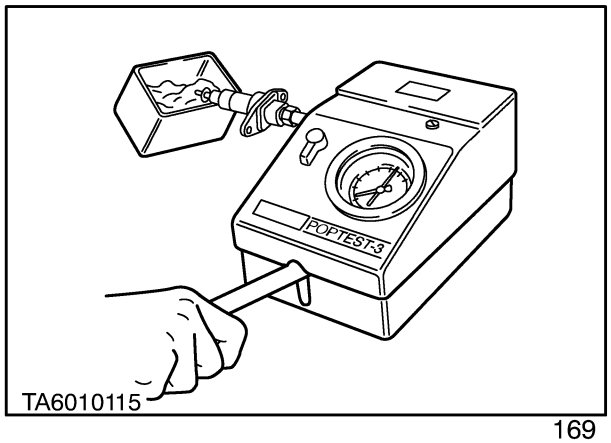

169

2. Prime the tester until oil is emitted from the tester line, then connect the injector.

3. Make sure the knob on the right-hand side of the tester is screwed in to prevent the gauge being over-pressurized if the injector nozzle is blocked.

4. Pump the tester and check the nozzle is free to open. Open the pressure gauge valve and begin injector testing. If the nozzle is blocked or the needle jammed, disassemble the injector.

5. Nozzle Opening Pressure Setting - Slowly pump the injector tester and observe the pressure at which the needle valve lifts and fuel is injected from the nozzle tip. By rotating clockwise or anti clockwise the adjuster located in the top of the injector, the pressure setting can be varied. The opening pressure required 240 bar (non-emissionized), 290 bar (emissionized).

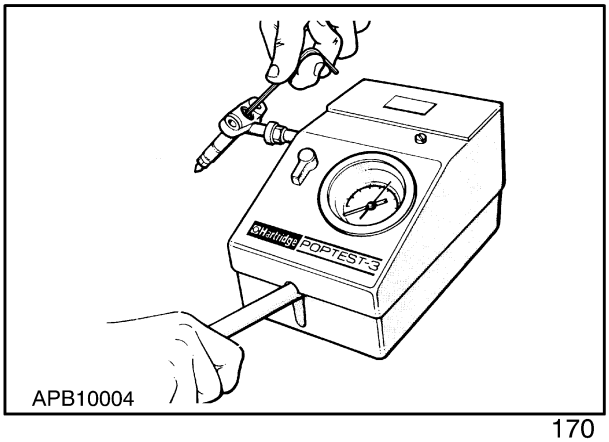

170

6. Spray Pattern - Pump the tester rapidly (80 to 90 strokes per/min.) and observe the spray pattern from the holes. An atomized spray free from distortion and irregular streaks of fuel should be observed. The tester is not regarded as providing a suitable test for atomization under working conditions, but gives an indication of the working of the nozzle.

7. Nozzle Seat Leakage - Wipe the nozzle tip dry and apply a pressure to 230 bar (3335 lbf/in^2), i.e., 10 bar (145 lbf/in^2) below the opening pressure. The nozzle tip and bottom face must remain essentially dry and there must be no tendency for blobs of fuel to collect or drip. A slight dampness can be ignored. If there is any leakage from the nozzle seat, the nozzle assembly must be scrapped.

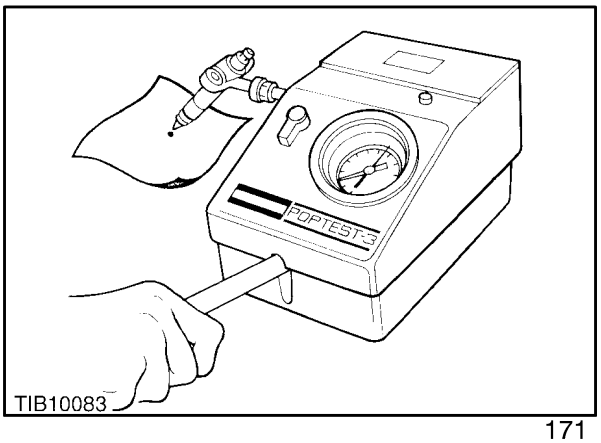

171

8. Nozzle Back Leakage - Apply a pressure of 230 bar (3335 lbf/in^2) 10 bar (145 lbf/in^2) below the opening pressure, then release the handle and the time/pressure drop should be between 148-99 bar) within 45 to 6 seconds, if below 6 seconds, the nozzle assembly must be scrapped. If above 45 seconds, check for carbon on the valve and/or blocked back leak drillings.

NOTE: *If the injectors meet the tests carried out then refit the injectors to the engine.*

DISASSEMBLY

1. Place the injector in a holding fixture with the nozzle uppermost. Do not clamp the injector body in a vise. Use socket, tool #CT9009 or 8126, to loosen the nozzle retaining nut.

2. Remove the nozzle retaining nut, complete with the nozzle body, needle valve and the dowelled adaptor plate.

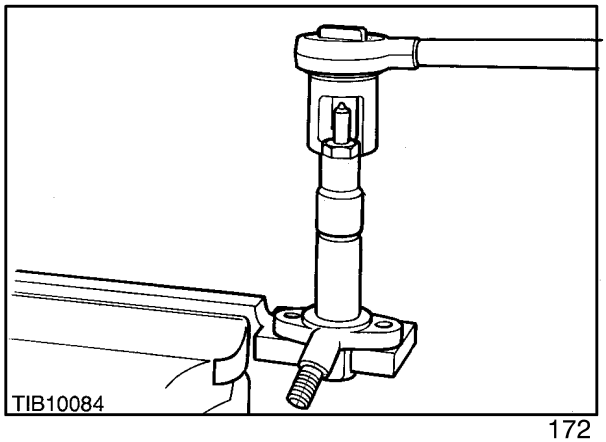

172

3. Remove the injector body from the holding fixture, invert and carefully remove the spring seat, spring and adjustment shims. To avoid damage, place all dismantled components in suitable baths of clean fuel oil.

NOTE: *To prevent corrosion of injector components after cleaning, rinse in clean fuel oil and place in a suitable bath of clean fuel oil.*

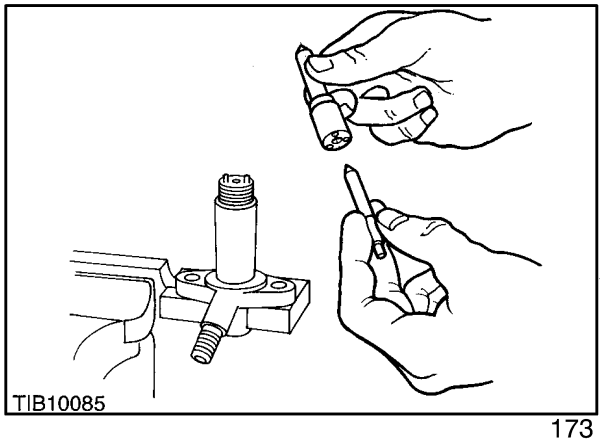

173

INSPECTION AND REPAIR

1. Clean the injector body by soaking in a carbon solvent and brushing with a brass wire brush. Inspect the body for damaged threads and pressure face, making sure the holes in the injector nozzle are thoroughly clean with no signs of corrosion or pitting.

2. Clean the spring and spring seat using a brass wire brush and check for scoring, pitting or corrosion.

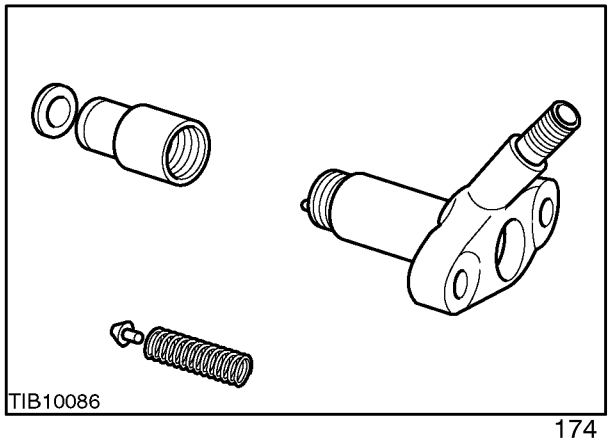

174

3. Clean the dowelled adaptor plate using a brass wire brush. Inspect the plate for loose or bent dowels, a damaged pressure face or corrosion.

4. Clean the needle valve and body by soaking in a carbon solvent and brushing with a brass wire brush. Using the tools included in the Injector Nozzle Cleaning Kit, Tool #DX730, clean the nozzle as follows:

NOTE: *If the needle valve is in any way damaged or blued, it must be discarded and a new matched needle valve and nozzle body assembly obtained. It is not possible to grind or lap the three special angles on the valve point.*

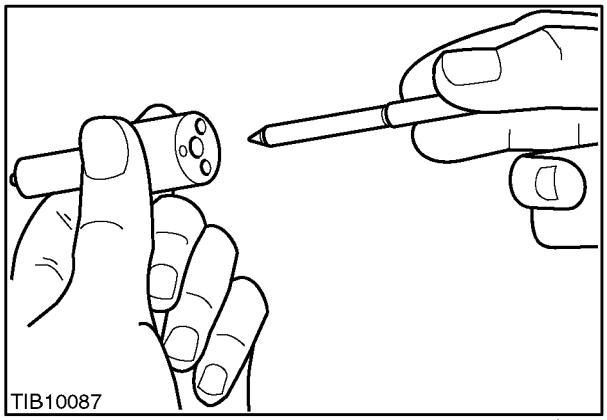

175

A. Clean the spray holes with a nozzle cleaning wire held in a pin vise so that it protrudes for only 1.5 mm (0.06 in.), thereby giving maximum resistance to bending. Insert the wire into each hole, pushing and rotating gently until each hole is cleared.

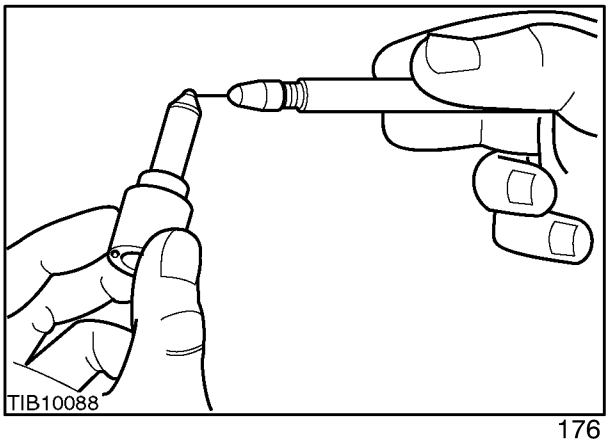

176

B. Clean the needle valve seat using the valve seat scraper by rotating and pushing the tool onto the valve seating.

C. Clean the fuel port using the fuel port scraper. Insert the scraper into the port, press hard against the side of the cavity and rotate to clear all carbon deposits from this area.

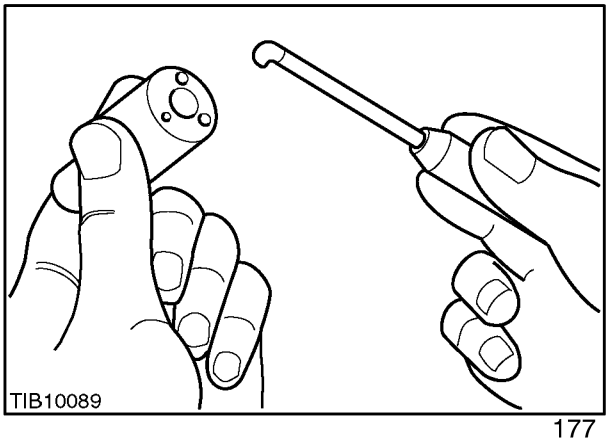

177

5. Use a Reverse Flush Nozzle Adaptor, Tool #CT9024, on the injector tester and reverse flush the nozzle to remove the carbon loosened during cleaning, Step 4.

6. After flushing the nozzle, polish the valve seat by placing a very small amount of tallow on the end of a polishing stick and rotate in the nozzle.

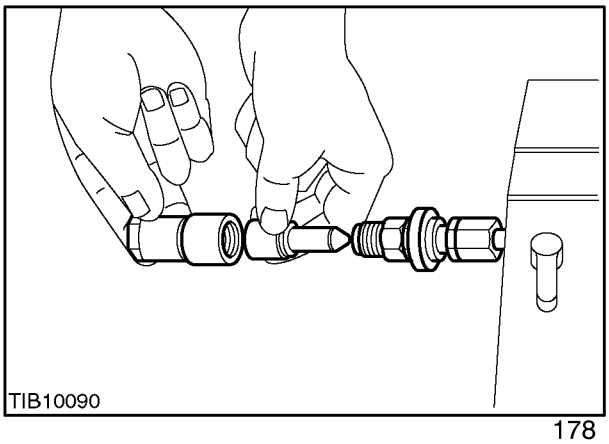

178

7. Clean the top of the needle valve using a needle valve scraper.

8. Clean the nozzle retaining nut using a brass wire brush and check to see that the threads are not damaged and are free from carbon deposits.

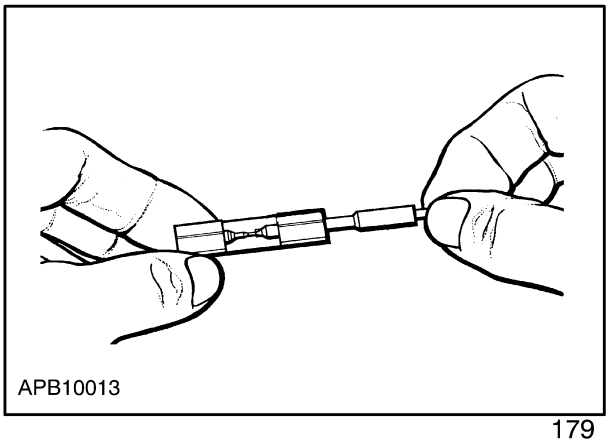

179

RE-ASSEMBLY

1. Make sure all parts are absolutely clean and undamaged prior to re-assembly. Rinse all parts in clean fuel oil and assemble the components while still wet.
2. Place the spring and spring seat into the injector body bore. Place the injector body into the holding fixture.
3. Assemble the needle valve into the nozzle body and then position the dowelled adaptor plate onto the nozzle body. Insert this assembly into the nozzle retaining nut.
4. Carefully assemble the dowelled adaptor plate and the nozzle retaining nut assembly onto the injector body, tighten the retaining nut to 48 Nm (35 ft. lbs) torque.

To set the nozzle opening pressure, connect the injector to the test rig as described in "Testing" and alter the adjusting nut until the specified opening pressure is achieved.

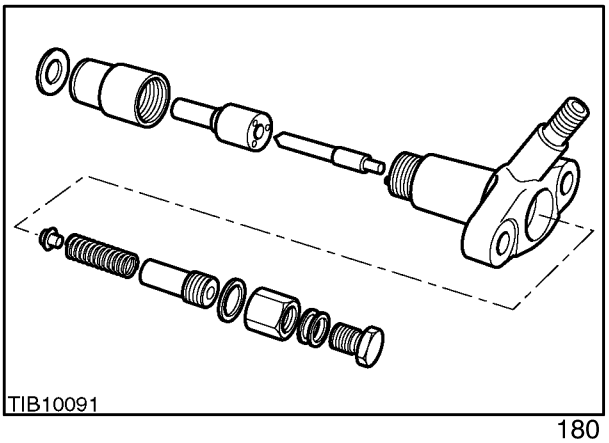

180

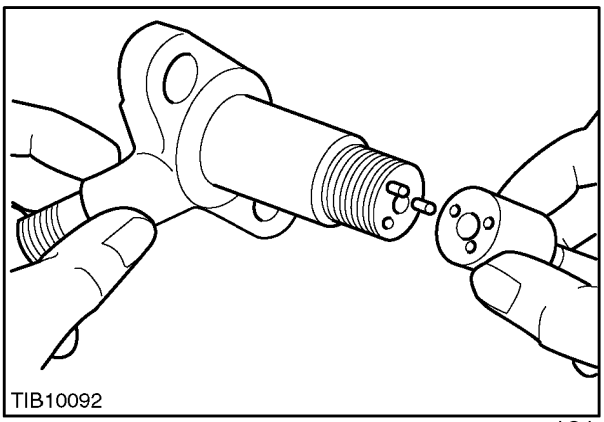

181

INSTALLATION

1. Remove any blanking plugs from cylinder head openings and pipe ends.
2. Insert the new/replacement injector in the cylinder head, having used a new cork dust washer and a new copper sealing washer.
3. Secure each injector with the two retaining bolts and tighten to 22 Nm (17 ft. lbs).
4. Reconnect the leak-off pipe using new washers either side of the banjo fittings and tighten banjo bolts to the 12 Nm (10 ft. lbs).
5. Reconnect high pressure fuel pipes to injectors and tighten gland nuts to 32 Nm (23 ft. lbs).
6. Tighten high pressure fuel pipe gland nuts at the injection pump to 32 Nm (23 ft. lbs).
7. Bleed the fuel system as detailed previously.
8. If the injectors are to be stored before installation, clean in calibrating oil. Storage for longer than 6 months may result in the necessity of disassembling and cleaning the injectors before installation.

INJECTION PUMP

SPECIFICATIONS

LUCAS C.A.V. pump

Type DPS/DP203	Series Distributor type, integral speed governor and advance device
Pump rotation	Clockwise
Firing order	1342

Model	TS80	TS90	TS90	TS100	TS110
Pump Type	DPS	DPS	DP203	DP203	DP203
Engine Timing BTDC Engine Position	-	-	28°	28°	28°
Pump Timing, Locking Bolt Position Overcheck	-	-	29°	29°	29°
Pump Scribe Mark to Engine Plate Timing Mark	0°	0°	-	-	-
Pump Internal Timing	262	263	-	-	-

TORQUE VALUES

DESCRIPTION		Nm	lbf.ft
Fuel Inlet Connection		59	43
Delivery Valve Holders		41	30
Fuel Injection Pump to Front Plate	- DPS	40	29
	- DP203	20-24	15-18
Front Plate Bolts Cover Bolts		22	16
Pump Locking Bolt DP203		13	10
Drive Gear		75-81	55-60

FUEL INJECTION PUMP - SPECIAL TOOLS

DESCRIPTION General	LESLIE HARTRIDGE TOOL No
Pump Mounting Plate	7244 - 200
Cam Advance Screw Socket	7244 - 125B
Transfer Pump Rotor Box Spanner	7044 - 889
Timing Adaptor Assembly	7144 - 262
Flange Making Tool	7244 - 27
Insert for Flange Making Tool	7244 - 30
Static Timing Gauge	7244 - 449
Relief Valve	7144 - 155
Stirrup Pipe	7144 - 262A
Blank Off Bolt	7144 - 558
Plunger Timing Tool	7244 - 448
Transfer Pressure Adjuster	7244 - 410A
Adaptor Hydraulic Head for Transfer Pressure Gauge	7244 - 382
Advance Measuring Gauge	7244 - 447
Pressure End Plug Test Plug	7244 - 435
Punch and Adaptor Drive Shaft Seal	7244 - 445
Dial	23764
Dial Indicator Holder	ST 183
Dial Indicator Holder Adaptor	89559
Protection Caps	
Head Locating Fitting	7044 - 897
Latch Valve Body Seals	7144 - 18
Latch Valve Restrictor Plug Seal	7144 - 124
Latch Valve Sleeve Nut Seal	7144 - 458C
Throttle Shaft Seals	7144 - 458C
Fuel Shut Off Seals	7144 - 458C
Auto Advance Cap and Plug Seals	7044 - 898

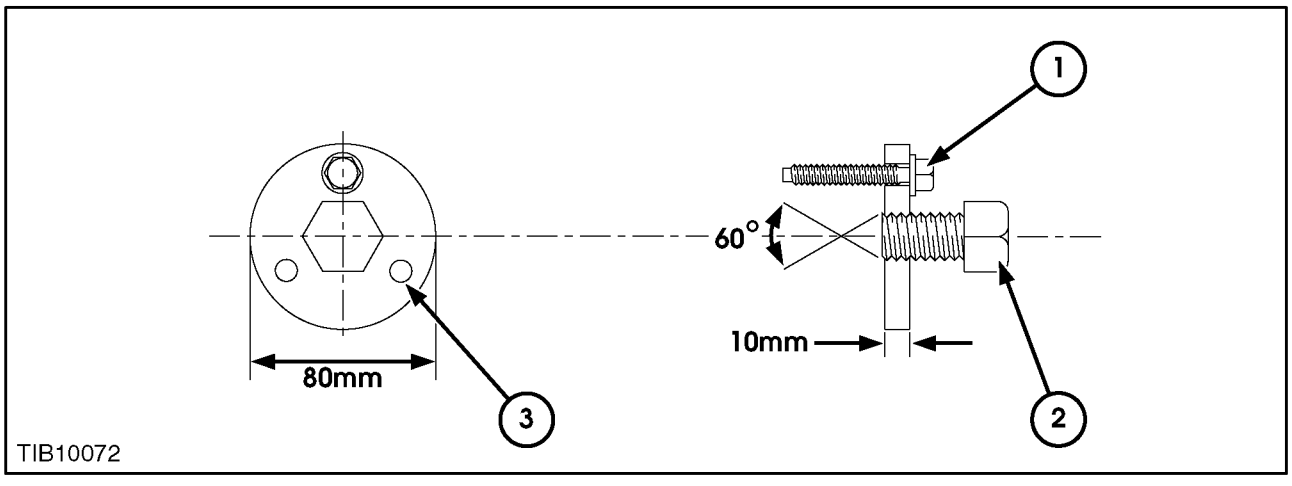

Fuel Injection Pump Drive Gear Puller

1. Bolt 5/16 - UNF x 2 in (51mm), With integral washer (3 Bolts required)
2. Bolt 3/4 x 16 - UNC x 2 in (51mm)
3. Holes 0.375 in (9.5mm) dia on 2.2 in (56.87mm) dia equally spaced material of 0.394 in (10mm) Plate HRLC P&O Steel.

DESCRIPTION

DPS (NON-EMISSIONISED) AND DP203

The TS range of tractors may be installed with either the DPS, Figure 182 or DP203 Figure 183 fuel injection pump. The DPS pump is installed onto non-emissionised engines, and the DP203 is fitted to emissionised engines.

The pump is flange mounted at the front right hand side of the engine and gear driven from the crankshaft via an idler gear.

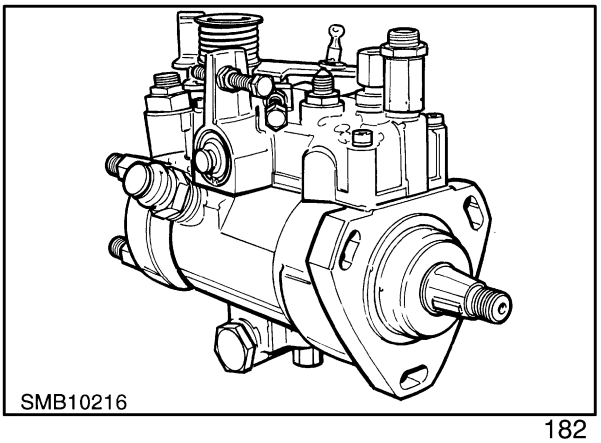

182

During operation all moving parts are lubricated by fuel oil under pressure preventing dust, water and other foreign matter from entering.

The DP203 fuel pumps are basically sealed items with only minimal parts being supplied in service. Components that are replaceable during normal service are the Fuel Shut off Solenoid (1).

If the fuel injection pump is suspected of being faulty the pump assembly should be taken to a specialist Lucas/CAV agent for repair. Without specialist equipment these pumps cannot be correctly set up. Unauthorised repair will also invalidate warranty and may cause the vehicle to break local emission regulations.

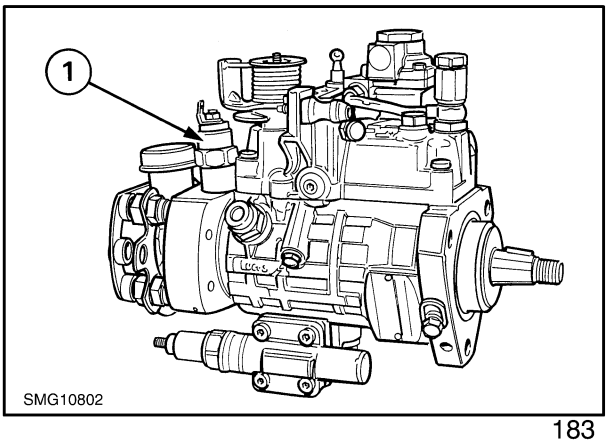

183

DPS NON EMISIONISED AND DP203 EMISIONISED

SOLENOID SHUTOFF VALVE

An electrically operated fuel shutoff valve is fitted into the top of the fuel pump. The unit consists of a solenoid (1), which controls a spring loaded piston and is located between the transfer pump outlet and the metering valve.

When the valve is energized on starting the solenoid lifts the piston against spring pressure and allows fuel at transfer pressure to pass to the metering valve.

When the solenoid is de-energized, by cutting the electrical supply, the return spring pushes the piston back against its seat and prevents the rotor from filling thereby stopping the engine.

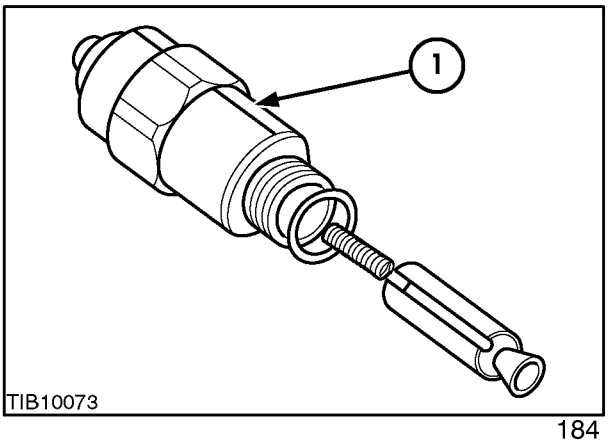

184

PUMP REMOVAL

NOTE: *Dismantling, assembly, testing and adjustment of the pump must be carried out by an authorized CAV Dealer.*

1. Clean all dirt from the injection pump and the surrounding parts.
2. Disconnect and remove all fuel lines from the injection pump and cap all openings to prevent entry of dirt.
3. Disconnect the throttle cable, fuel shutoff solenoid wire and wax motor wire, where fitted.
4. Remove the pulley guard.
5. Remove the fan drive belt.
6. Remove the idler pulley
7. Remove the rocker cover breather tube.
8. Remove the engine timing cover from the engine front cover.

DP203 ONLY

9. If the pump is to be reinstalled without being serviced, rotate the engine to approximately 40° BTDC compression stroke, loosen the pump timing gear bolt. DO NOT REMOVE GEAR. Rotate the engine in the direction of rotation to 28° BTDC compression and lock the pump locking tag using the bolt, to 13 Nm. Locking tab location 1 is unlocked, 2 is locked.
10. Remove the pump timing gear bolt DPS pump.
11. Fabricate a puller (see tools) and Install the puller to the drive gear using three bolts and remove the gear.
12. Remove the pump retaining bolts, then remove the pump from the engine front cover plate. Cap all openings to prevent entry of dirt.

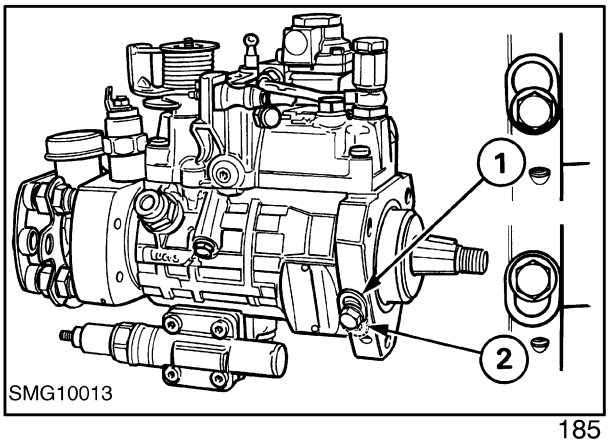

185

INJECTION PUMP TIMING

IMPORTANT: *The distributor type pump to engine timing cannot be checked by alignment only, of the scribed line on the pump flange with the zero degree mark on the rear of the engine front plate.*

The timing can only be established by internal timing of the pump after removal from the tractor.

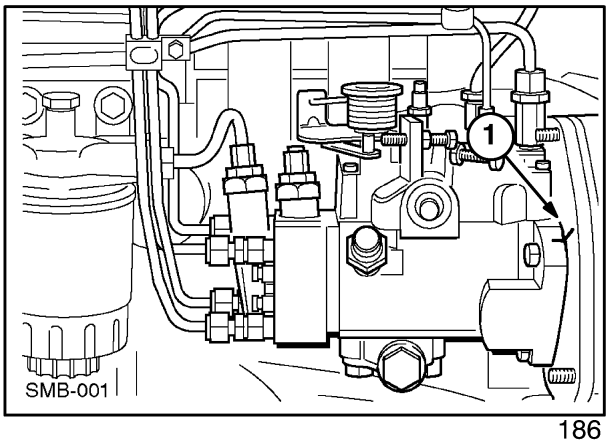

186

If the pump is not to be internally timed, then prior to removal note the setting of the pump relative to the zero degree mark on the rear of the engine front plate. Mark the plate with a center punch to align with the pump flange scribed line.

This mark may be used as a reference point to which the original, re-conditioned or new pump should be set on installation.

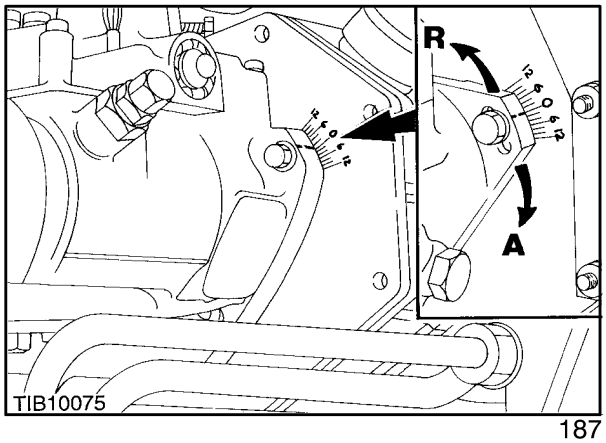

187

D.P.S. AND DP203 FUEL INJECTION PUMP TIMING TOOLS

IMPORTANT: *Whenever a replacement fuel injection pump is being installed or poor engine performance is evident, the use of the following timing tool is recommended.*

V.L. Churchill Ltd tools are available and recommended, to check the fuel injection pump timing of all Lucas CAV D.P.S. type fuel injection pumps. These tools are used for:

1. Engine front plate timing marks in relation to flywheel timing marks.

2. Fuel injection pump internal timing.

NH 01338

Timing gauge, splined shaft and slotted arm

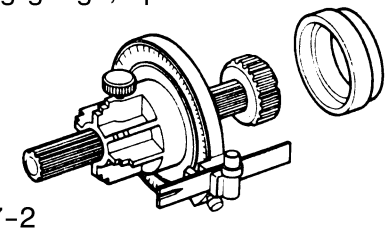

PD.67-2

Timing gauge, adaptor for D.P.S. fuel injection pump

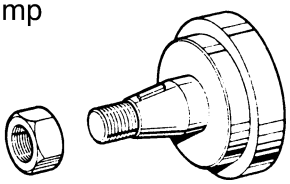

PD.67-3

D.P.S. Fuel injection pump timing mark, checking fixture

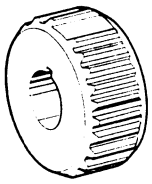

188

MODEL	PUMP TIMING INTERNAL	PUMP TIMING STATIC
TS 80 DPS	262°	10°
TS 90 DPS	263°	10°

CHECKING ENGINE TIMING MARKS (DPS ONLY)

The engine should be rotated to approximately 30° Before Top Dead Centre with No.1 cylinder on the compression stroke, check this at the flywheel (1).

The fuel injection pump must then be removed from the engine.

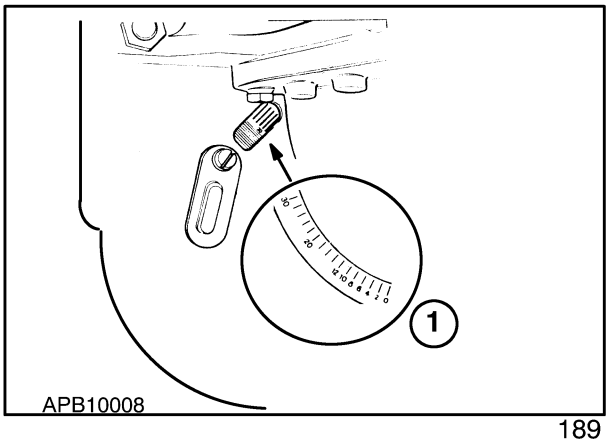

189

With the fuel pump removed, position the tapered splined adaptor (PD 67-2) into the fuel pump timing gear, inplace of the fuel injection pump.

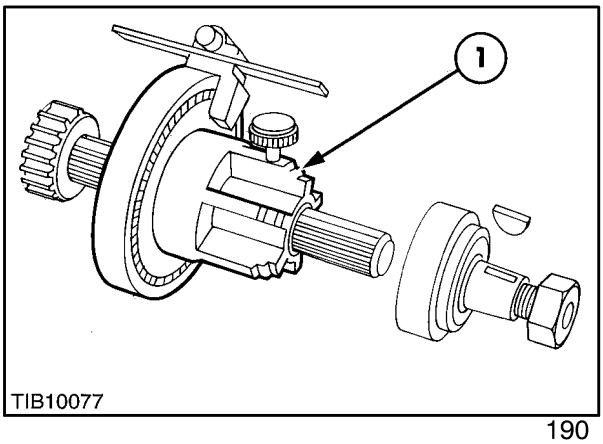

190

Set the timing gauge arm on tool (MS 67-B) to the 'specified' internal pump timing degrees marking indicated in the table, i.e TS 80 = 262° then position the timing tool into the splined Adaptor (PD 67-2), locating the slotted arm against the timing cover.

Rotate the engine slowly until the static engine timing mark on the flywheel is aligned on the compression stroke No. 1. i.e 10° .

The timing gauge arm slot indicates the correct timing position for alignment (of the fuel injection pump timing mark) when the pump is reassembled. Highlight this point on the engine front plate.

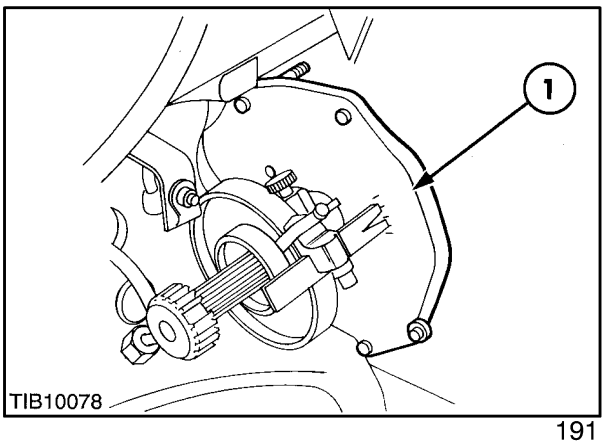

191

DPS FUEL INJECTION PUMP INTERNAL TIMING -TOOL NO MS 76-B

The injector tester is connected to the specified pump high pressure outlet, number 1 injector.

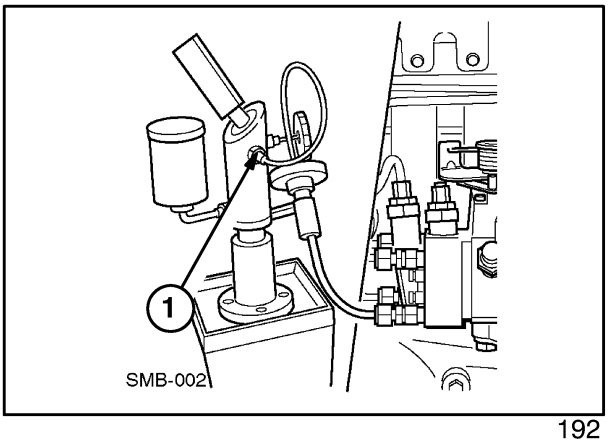

192

Attach the checking fixture (PD 67-3) to the pump shaft and engage the timing gauge (MS 67-B) on to the checking fixture with the slotted arm over the pump flange.

Set the timing gauge arm to the 'specified' degree marking.

Turn the gauge counter-clockwise so that the 'V' notch in the gauge arm is aligned with the end of the flange slotted hole (1).

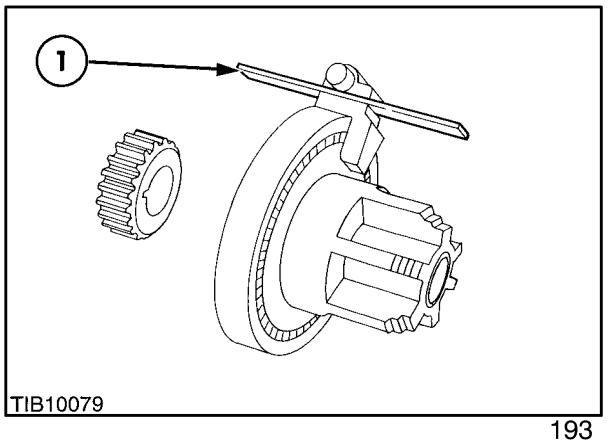

193

Using a suitable injector tester, raise the fuel pressure to 55 bar (798 lbf/in^2) and slowly turn the gauge clockwise until the pump locks. When the pump shaft 'locks', pressurised fuel from the outlet has entered the rotor drillings and forced the plungers and rollers in contact with the cam ring. This is the point of commencement of injection.

The gauge arm slot should align with the flange timing mark, if the existing mark is correct. Re-mark the pump flange if incorrect.

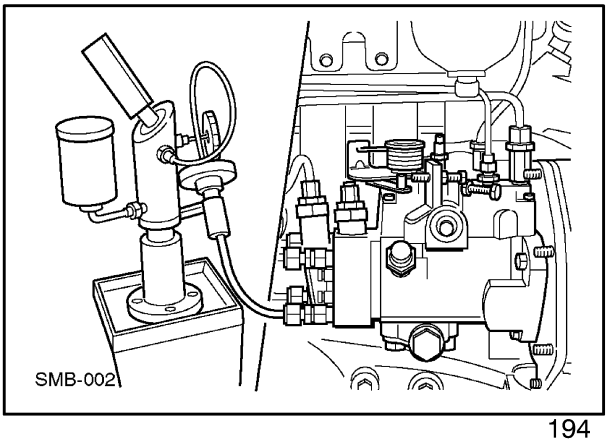

194

DP203 FUEL INJECTION PUMP TIMING

If the DP203 pump has been removed from the tractor 'UNLOCKED' or the pump timing needs verifying the following procedure should be followed, with the pump removed from the tractor, Figure 195.

- Obtain a suitable woodruff key and install tool No. PD67-3 to the pump, Figure 196.
- Set tool No. MS67-B to 29° and lock at this point. Install the tool onto the pump over tool PD67-3 and rotate until the slotted arm aligns with the scribed mark on the pump, Figure 197.
- Lock the pump at the point and remove the timing tools.
- Rotate the engine to the correct position, 28° BTDC, Figure 198, and install the pump on the engine, with a new 'O' ring installed onto the front of the pump. 20-24 Nm (15-18 lbf.ft)
- Initially tighten the pump gear retaining nut to 20 Nm (15 lbf.ft) and 'unlock the pump.
- Fully tighten the nut to 75-81 Nm (55-60 lbf.ft)

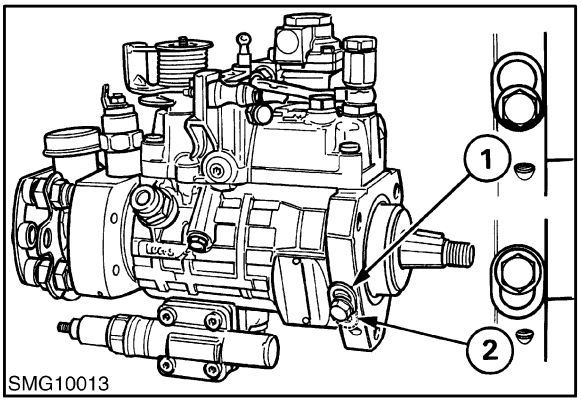

195

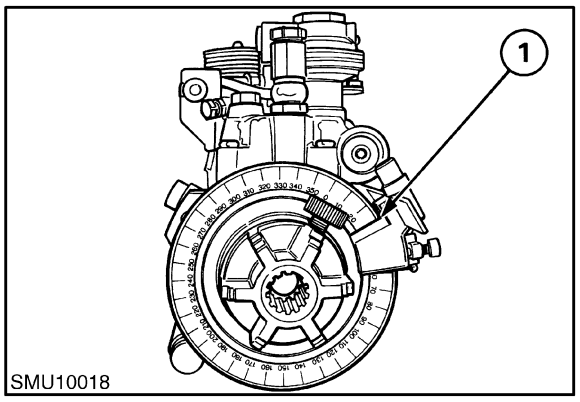

196

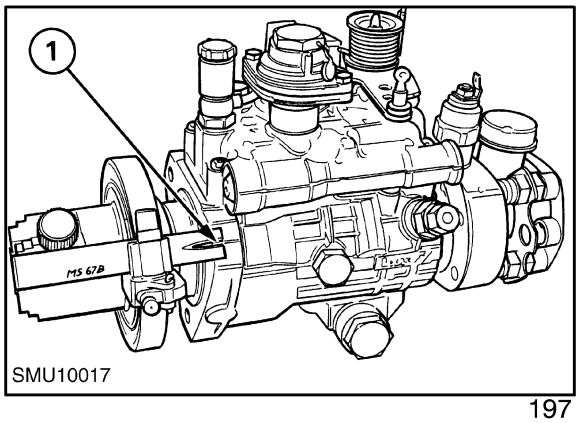

197

INSTALLATION

DPS Pump

1. Install a new pump to front engine plate O-ring on the pump mounting flange.
2. Install the three injection pump to engine front plate mounting bolts.

   If the pump has not been internally timed, align the scribed line on the pump flange with the center punch reference mark previously made on the rear of the engine front plate.

   Tighten the mounting bolts.

Pump Mounting Bolts: 40 Nm (29 lbf.ft)

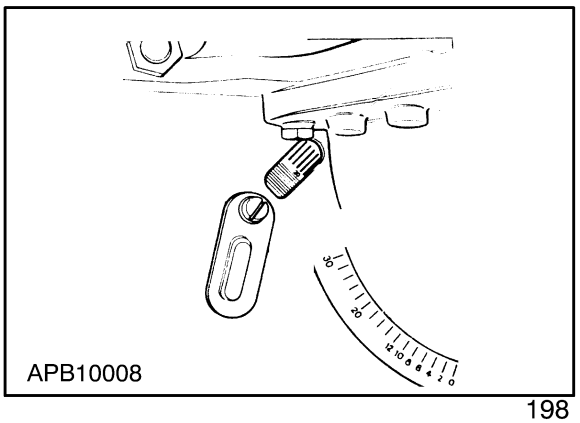

198

3. Install the pump drive gear, aligning the gear with the woodruff key on the pump drive shaft. Also ensure that the drive gear timing mark aligns with the gear timing mark.

4. Install the lock washer and retaining nut to the pump drive shaft and tighten.

   Tighten the Gear Nut.

Gear Retaining Nut: 75–81 Nm (55–60 lbf.ft)

DPS and DP203 Pumps

5. Position a new inspection cover gasket and install the inspection cover to the engine front cover. Tighten the retaining bolts.

6. Connect the fuel lines to the injection pump and tighten.

7. Reconnect the throttle and fuel shutoff controls to the injection pump.

8. Turn on the key start and prime the system using the electric lift pump or hand primer. Start the tractor and adjust the engine idle and maximum no-load speeds, see “Adjustments for the DPS Distributor Type Fuel Injection Pump” earlier in this section.

INJECTION PUMP STORAGE

If, after overhaul, an injection pump is being stored, the body should be filled with calibrating oil and all the connections sealed with dust plugs and caps.

If the pump is stored for a period of six months or more, the unit should be re-tested according to the Test Plan before use in service.

TURBOCHARGER

SPECIFICATIONS

TURBOCHARGER

Compressor Shaft Axial End Play	0.025 mm - 0.10 mm (0.001in - 0.004in)
Bearing Radial Clearance	0.4 mm - 0.5 mm (0.016in - 0.021in)

TORQUE VALUES

GENERAL TORQUES	Nm	lbf ft	kgf m
Turbine Housing Bolts	20-25	15-18	2.0-2.5
Turbocharger to Manifold	41-47	30-35	4.1-4.7
Oil Feed Tube to Turbocharger (Banjo Bolt)	30-40	22-30	3.0-4.0
Oil Feed Tube to Filter Head Connector	18-20	13-15	1.8-2.0
Connector to Filter Head	54-81	40-60	5.4-8.1
Oil Return Tube bolts from Turbocharger	20-25	15-18	2.0-2.5
Oil Return Tube to Block Connector	60-70	45-50	6.0-7.0
Oil Return Connector to Block	27	20	2.7
Inlet Hose Clamps	1.7-2.3	(15-20 lbs in)	

TOOLS

SEALER

Type	Sealer Anaerobic Low Strength	Part No 82995768

DESCRIPTION AND OPERATION

The turbocharger consists of gas turbine and air compressor wheels mounted on opposite ends of a common shaft. The wheels are enclosed by a housing, and the shaft by a center housing.

The exhaust turbine is a centripetal (from outside to center), radial inflow designed mechanism consisting of a cast turbine wheel, wheel shroud, and a specially designed housing that encloses the wheel and directs the flow of gas through the turbine.

The intake compressor is a centrifugal, radial outflow mechanism consisting of a cast compressor wheel, a backplate assembly, and a specially designed housing that encloses the wheel and directs the flow of air through the compressor.

The center housing supports the compressor and turbine wheel shaft in a pair of identical bearings which contain oil holes for directing oil to the bearing bores and shaft journals. Passages drilled in the center housing provide for directing oil, supplied by the engine, from the inlet port to oil grooves machined in the bearing bores, which align with holes in the bearings.

Piston rings are installed at each end of the shaft between the bearing and the adjacent turbine or compressor wheel to prevent lubricating oil from entering the turbine and the compressor area.

The turbocharger is mounted on the engine exhaust manifold.

During operation of a turbocharged engine, exhaust gas from the engine exhaust manifold flows into the turbine (B). The exhaust gas pressure and the heat energy extracted from the gas cause the turbine wheel to rotate which, in turn, causes the compressor wheel to rotate.

The cooled and expanded exhaust gas leaving the turbine wheel is directed by the turbine housing to the engine exhaust system, which expels it to the atmosphere.

Rotation of the compressor wheel causes ambient air (A) from the engine air cleaner to be drawn into the compressor housing, where it is compressed and delivered to the engine intake manifold.

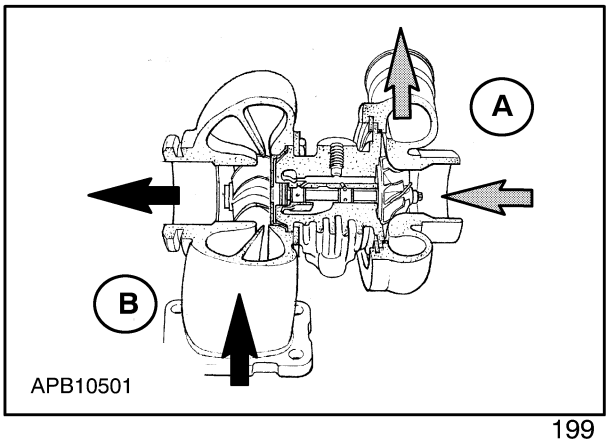

199

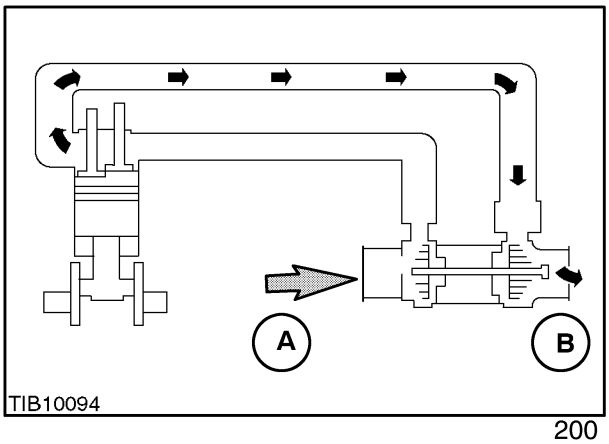

200

The increased volume and density of the air delivered to the engine cylinders permit a corresponding increase in the volume of fuel that can be introduced into the cylinders while maintaining the air/fuel ratio required for proper combustion. Since engine power output is a function of the volume of fuel burned, the increase in the volume of fuel introduced as a result of turbocharger operation results in an increase in engine power output.

To allow the turbocharger and exhaust manifold to cool down and present any possible distortion of components, idle the engine at 1000 RPM for approximately one minute before stopping the engine.

IMPORTANT: *To ensure adequate lubrication of the turbocharger, allow the engine to idle at 1000 RPM for approximately one minute after starting the engine.*

TURBOCHARGER FAULT FINDING

It is important when troubleshooting a suspected turbocharger malfunction to keep in mind that a turbocharger cannot compensate for incorrect engine operating procedures; deficiencies of the engine air intake, fuel, or exhaust systems; or for damaged engine components such as valves, pistons, rings, liners, etc. Replacing a good turbocharger with another will not correct engine deficiencies.

Consequently, systematic troubleshooting of a suspected turbocharger failure is essential for two very important reasons. First, it must be determined what, if anything, is wrong with the turbocharger so that it can be repaired. Second, it must be determined what action will prevent a recurrence of the failure.

In many cases, the evidence required to determine the cause of a malfunction is destroyed in the process of removing the turbocharger from the engine. For example, if a turbocharger failed as the result of a faulty installation (such as loose duct connections that permitted ingestion of dirt by the compressor), this fact would not be evident once the turbocharger was removed from the engine.

Furthermore, failure to take appropriate steps to ensure correct installation, such as repairing or replacing defective clamps or ducting, could cause the replacement unit to fail in a similar manner.

The following chart contains information pertaining to probable failure modes of turbocharged engines, possible causes for such failures, and the maintenance action required to remedy each possible cause. It is not represented that this information is all-inclusive. On the contrary, this information should be considered primarily as representative of the methods or techniques that should be employed in troubleshooting a turbocharged engine malfunction.

In general, those troubleshooting procedures that can be performed with the least effort and in the least amount of time should be performed first. No removal or disassembly procedures should be performed until all visual inspections and sensory tests (sight and feel) that can be accomplished with the turbocharger installed have been performed. The possible causes and procedure are generally arranged in the order of ease of accomplishment.

FAULT FINDING

PROBLEMS	POSSIBLE CAUSES
1. Engine lacks power or emits black smoke	Dirty air cleaner Loose compressor-to-intake manifold connections Leak at engine intake at turbocharger mounting flange Turbo rotating assembly binding Air cleaner to turbocharger duct restricted Compressor to intake manifold duct restricted Engine exhaust system restricted Engine malfunction (rings, pistons, valves and associated parts).
2. Engine exhaust emits blue smoke	Dirty air cleaner Loose compressor-to-intake manifold connections Leak at engine intake manifold Plugged engine oil filter Restricted duct between air cleaner and turbocharger compressor Seal leak at compressor end of turbocharger Engine malfunction (rings, pistons, valves
3. Excessive engine oil consumption	Wrong type or viscosity of engine lubricating oil Seal leaks at compressor end of turbocharger (indicated by oil in housing or on wheel) Oil in engine exhaust manifold (caused by malfunction of rings, pistons, valves and associated parts).
4. Noisy turbocharger	Dirty air cleaner Foreign material or object in compressor-to-intake manifold duct Foreign object in engine exhaust system Carbon buildup in turbine housing Turbocharger rotating assembly binding or dragging
5. Turbocharger rotating assembly binding or dragging	Damaged compressor wheel Damaged turbine wheel Compressor or turbine wheel rubbing on housing due to worn bearings, shaft journals or bearing bores Excessive dirt buildup in compressor (housing or wheel) Excessive carbon buildup behind turbine wheel (overhaul turbine) Slugged or coked center housing (check engine lube system, overhaul turbocharger)

PROBLEM	POSSIBLE CAUSES
6. Seal leaks at compressor end of turbocharger	Dirty air cleaner Restricted duct between air cleaner and turbocharger Loose compressor-to-intake manifold dust connections Leaks at engine intake manifold Restricted turbocharger oil drain line Plugged engine crankcase breather Worn or damaged compressor wheel (worn bearings, bores or journals) Excessive piston blowby or high internal crankcase pressure
7. Seal leaks at turbine end of turbocharger	Excessive pre-oiling Plugged engine crankcase breather Restricted turbocharger oil drain line Sludged or coked center housing Worn turbocharger bearings, bearing bores, or shaft journals.
8. Worn turbocharger bearings, bores or journals	Inadequate pre-oiling following turbocharger installation or engine lube servicing Contaminated or improper grade of engine oil used in engine Insufficient oil supplied to turbocharger due to “oil lag” Restricted turbocharger oil feed line Plugged engine oil filter Abrasive wear due to flaking of “coked” particles from center housing interior surface Insufficient lube oil supplied to turbocharger due to engine oil pump malfunction

NOTES:

A. Refer to Engine portion of Service Manual for servicing procedures.

B. With engine stopped, check duct clamping devices for tightness.

WARNING: *Always start the engine from the tractor seat. never start the engine from the ground.*

C. With engine running at idle speed, lightly spray duct connections with starting fluid. Leaks at connections will be indicated by an increase in engine speed due to the starting fluid being drawn into the compressor and pumped into the engine combustion chambers.

D. With engine running at idle speed, check duct connections for leaks by applying lightweight oil or soap suds to areas of possible leakage and looking for bubbles. Exhaust gas leakage between the cylinder head, exhaust manifold and the turbocharger inlet will also create a noise level change.

E. With engine running at idle speed, check for unusual noise and vibration. If either condition is noted, shut down the engine immediately to protect the turbocharger and engine from further damage. With the engine stopped, check the turbocharger shaft steel assembly for damage as outlined in Note I, below.

F. With engine running, a change in the noise level to a higher pitch can indicate air leakage between the air cleaner and the engine, or a gas leak between the engine block and the turbocharger inlet.

G. Exhaust gas leakage may be indicated by heat discoloration in the area of the leak.

H. With the engine running, noise level cycling from one level to another can indicate a plugged air cleaner, a restriction in the air cleaner- to-compressor duct, or a heavy buildup of dirt in the compressor housing or on the compressor wheel.

I. Internal inspection of the center housing can be accomplished by removing the oil drain line and looking through the oil drain opening. When a sludged or coked condition exists, a heavy sludge buildup will be seen on the shaft between the bearing journals and in the center housing from the oil drain opening back of the turbine end.

J. Thorough cleaning of the air induction system is essential following compressor wheel damage due to foreign object impact. In many cases, metal pieces from the wheel become imbedded in the air cleaner element. If the element is not changed in such cases, these metal pieces can be drawn into the replacement turbocharger and cause it to fail in the same manner as the original unit.

K. With the air inlet and exhaust gas ducting removed from the turbocharger, examine both the compressor and turbine wheels for blade damage. Examine the outer blade tip edges for evidence of rubbing on adjacent housing surfaces.

NOTE: *A light is required for examining the turbine wheel blade tips, which are positioned inside the turbine housing. The surfaces requiring inspection can be viewed from the outlet end of the turbine housing.*

Rotate the rotating assembly by hand and feel for smooth turning, dragging or binding. Push the rotating assembly sideways while rotating to feel for wheel rub. If there is any indication of rubbing, perform the bearing clearance inspection procedures outlined in this manual under Preventive Maintenance. If the rotating assembly rotates freely and there is not evidence of binding or rubbing, it can be assumed that the turbocharger is serviceable.

OVERHAUL - REMOVAL

1. Remove the exhaust stack tube and fully raise the hood.

2. Loosen the exhaust muffler to turbo clamp (1), remove the muffler bracket bolt and lift muffler away.

3. Disconnect the air cleaner to turbocharger tube (3) and the turbocharger to intake manifold tube (2) by loosening the tube hose clamps.

4. Disconnect the oil supply and return tubes from the turbocharger (4). Cap the ends of the tubes and the oil ports of the turbocharger to prevent future bearing failures due to entry of foreign material.

5. Remove the turbocharger (5) and gasket from the exhaust manifold. Cover the opening in the exhaust manifold to prevent the entry of dirt which could cause damage to the turbine wheel blades after installation and start-up.

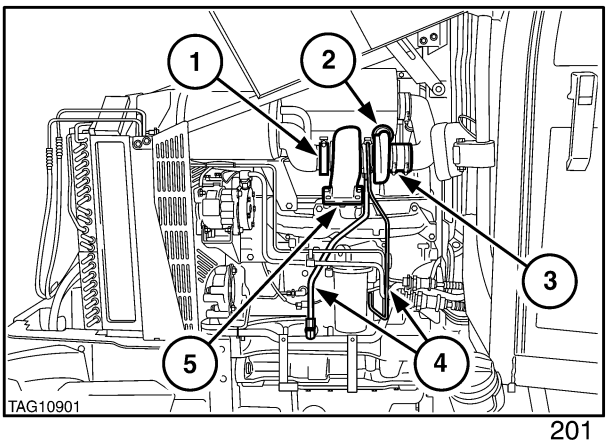

201

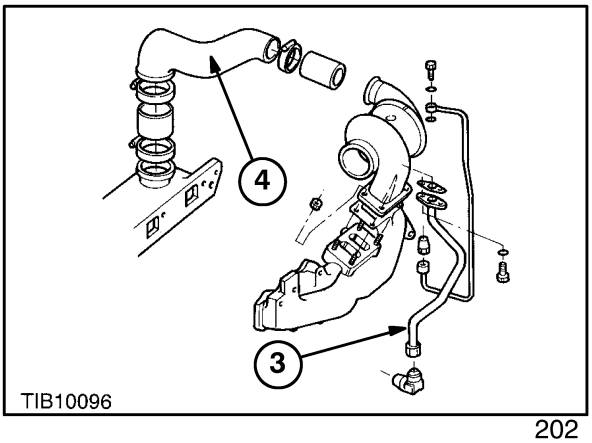

202

NOTE: *Before removing and cleaning the charger look for signs of oil or gas leakage or wear to the wheel that may not be evident after cleaning.*

DISASSEMBLY

1. Clean the exterior of the turbocharger using a non-caustic cleaning solvent to remove outside dirt before disassembly.

2. Mark the compressor housing, turbine housing and center housing with a punch or scribe (1) to ensure proper reassembly.

NOTE: *Exercise care when removing the compressor housing to avoid damaging the compressor wheel blades. Tap the turbine housing with a soft faced hammer if force is needed for removal.*

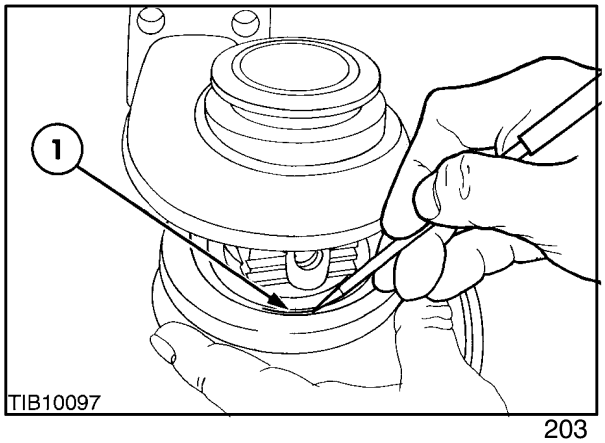

203

3. Remove compressor housing 'C' clip from centre housing intake side (1).

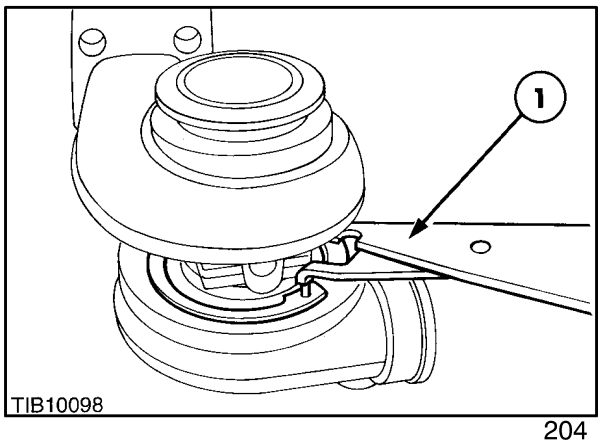

204

NOTE: *Exercise care when removing the compressor housing to avoid damaging the compressor wheel blades. Tap the turbine housing with a soft faced hammer if force is needed to remove*

4. Loosen and remove bolts (1) from the turbine housing exhaust side, and lockplates

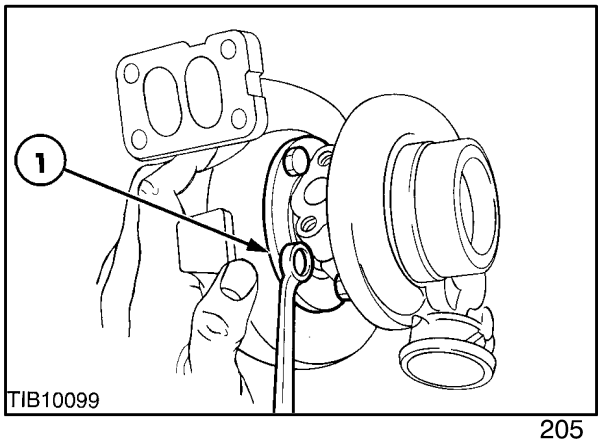

205

CLEANING

Before cleaning inspect all parts for burning, rubbing, or impact damage that may not be evident after cleaning. Clean all parts in a non caustic solution, using a soft bristle brush, a plastic blade scraper, and dry compressed air to remove residue.

DO NOT- use abrasive cleaning methods which might damage or destroy machined surfaces.
DO NOT- immerse CHRA in solvent.
DO NOT- blow under compressor wheel with compressed air.
DO NOT- permit wheel/shaft assembly to spin when blowing off solvent and residue.

INSPECTION

1. Inspect the compressor housing assembly for the following defects,

Wheel rub damage in the contour area that cannot be polished out with 80 grit silicon carbide abrasive cloth.

Worn, broken, or corroded snap ring grooves

Nicks, dents, or distortion that could prevent proper sealing between the compressor housing and the CHRA. (centre housing and rotating assembly)

NOTE: *Replace the compressor housing if any of the above defects are found.*

2. Inspect the turbine housing assembly for the following defects,

Wheel rub damage in the contour area that cannot be polished out with 60 grit silicon carbide abrasive cloth.

Worn, broken, or corroded snap ring grooves (snap ring turbine housing models).

Nicks, dents, or warpage that could prevent proper sealing between the turbine housing and the CHRA.

NOTE: *If there is any compressor or turbine wheel blade damage, the CHRA must be replaced. Operating a turbocharger with damaged blades will result in further damage to component parts or the engine.*
Blades cannot be straightened in service.

CENTRE HOUSING and ROTATING ASSEMBLY (CHRA)

IMPORTANT: *The CHRA as an assembly, has been balanced at the factory, under precision conditions. As such it must not be disassembled in any way. If disassembled the balance will be destroyed, and a new CHRA must be fitted.*

CENTRE SHAFT RADIAL CHECK

Check the journal bearing radial clearance, whenever there is reason to suspect that the bearings are worn enough to allow either the compressor wheel, or the turbine wheel, to rub on its housing. This may be heard as a high pitched whine.

1. With the turbocharger removed attach an indicator with a dog leg probe to the centre housing. The indicator plunger should extend through the oil outlet port, and contact the shaft of the turbine wheel assembly.

2. Manually apply equal and simultaneous pressure, to the compressor and turbine wheels to move the shaft as far as it will go away from the dial indicator probe.

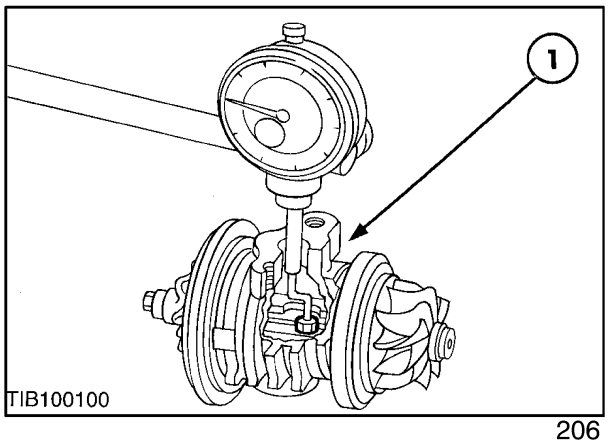

206

3. Set the dial indicator to zero.

4. Manually apply equal and simultaneous pressure to the wheels to move the shaft as far as it will go toward the plunger. Make a note of the shaft movement shown on the indicator dial.

NOTE: *To make sure the reading indicated is the maximum possible, roll the wheels slightly in both directions while applying pressure.*

5. Manually apply equal, and simultaneous pressure to the compressor, and turbine wheels, to move the shaft away from the plunger again. Note that the indicator pointer returns exactly to zero.

6. Repeat the steps 2 to 5 several times, to ensure that maximum radial clearance is indicated by maximum shaft movement, has been measured

7. If the maximum clearance is less than 0.056mm (0.0022 in), or greater than 0.127mm (0.0050 in), replace the CHRA.

Trouble shoot the engine to find the cause of the bearing failure, and correct the problem before resuming operations.

AXLE CLEARANCE CHECK

Check the thrust bearing axial clearance as follows,

1. Place a dial indicator with the probe on the compressor end of the turbocharger shaft assembly.

2. Manually move the compressor/turbine wheel assembly, as far as it will go away from the plunger.

3. Set the dial indicator at zero

4. Manually move the compressor/turbine wheel assembly as far as it will go toward the dial indicator plunger. Make a note of the shaft movement shown on the indicator dial.

5. Manually move the compressor/turbine wheel assembly as far as it will go away from the plunger. Note that the indicator plunger returns to zero.

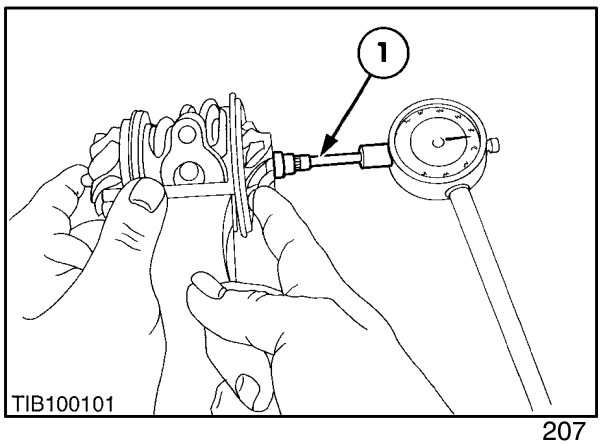

207

6. Repeat steps 2 to 5, several times to make sure that the maximum axial clearance, as indicated by maximum shaft movement, has been measured.

7. If the maximum clearance is less than 0.0254mm (0.0010 in), or greater than 0.084mm (0.0039 in), replace the CHRA

RE-ASSEMBLY

1. It is recommended replacing the following with factory authorized parts only, at each overhaul or whenever parts are removed.

Snap ring, compressor housing retainer

O-Ring seal, compressor housing

Retainer Plates, turbine housing

Bolts, turbine housing retainers

2. Parts that require changing if faulty or damaged,

CHRA, turbine assembly

Compressor Housing

Turbine Housing

3. Inspect all mating surfaces and snap ring groove, to insure that they are free of burrs, foreign matter and corrosion deposits.

4. Transfer scribe marks from old snap rings to new, and coat with a light coating of new engine oil.

5. Install oiled snap ring on compressor end of CHRA , with beveled face toward the turbine end.

6. Install an 'O' ring (1) on the centre housing compressor end flange and place compressor housing assembly in position. Be careful not to damage the compressor wheel blades.

7. Carefully rotate the compressor housing onto the CHRA to line up scribed marks.

8. Install the oiled snap ring, lug first, into the compressor housing groove. Be sure that the beveled side faces the turbine end and the scribe marks are aligned.

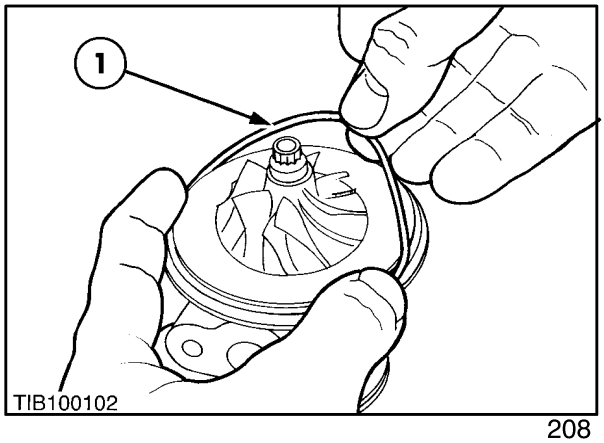

208

9. Tap the inner circumference or lug ends of the ring with an appropriately sized drift to ensure proper seating.

NOTE: *When installing a new CHRA or turbine housing, transfer scribed alignment marks from the old, to the new parts.*

10. Position the turbine housing discharge side down, on a flat, level surface. Place the CHRA turbine wheel end into the housing, use care to avoid damaging the wheel blades. Check visually for proper alignment.

11. Carefully rotate the CHRA in the turbine housing to line up the scribed marks. Recheck for proper alignment and position the locking plates.

12. Coat the bolts (1) in a suitable anti seize compound, and tighten to 20-25Nm (15-18 lbf ft).

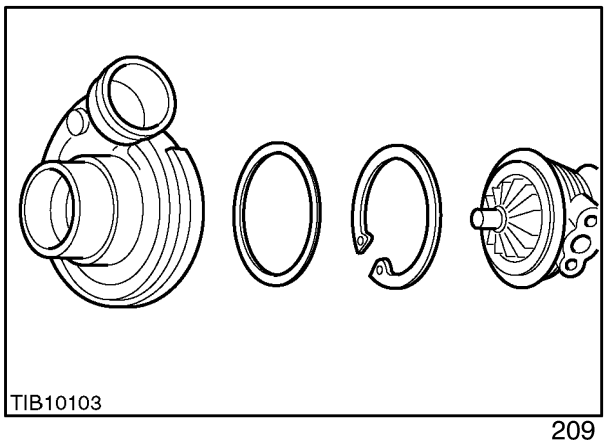

209

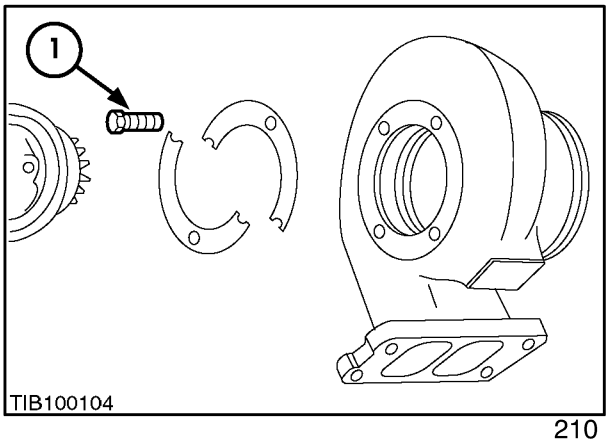

210

Installation

1. Prior to installation fill the turbocharger centre housing with new clean oil, and rotate the main shaft to lubricate the bearings.

2. Installation of the turbocharger follows the removal procedure in reverse. Install a new manifold gasket, and tighten manifold bolts to, 41-47Nm (30-35 lbf ft).

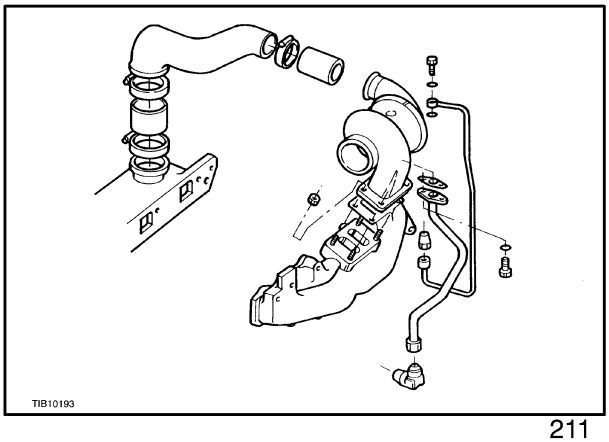

211

3. Replace the washers and re-connect the oil Feed tube banjo bolt and torque to 22-30 lbf ft (30-40Nm).

4. The oil feed tube connector, to oil filter head assembly if disturbed should be refitted. Apply sealer to connector “See Specifications and torque to, 54-81Nm (40-60 lbf ft).

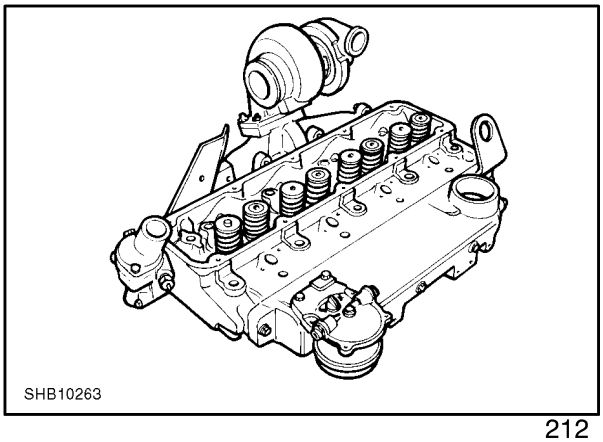

212

5. Apply sealer "See Specifications", assemble the oil feed tube to the oil filter head connector and tighten, 18-20Nm (13-15 lbf ft)

6. Place a suitable receptacle below the oil outlet port and, **WITH THE ELECTRICAL SOLENOID WIRE DISCONNECTED AT THE FUEL INJECTION PUMP,** crank the engine until oil flows from the outlet port.

7. Reconnect the oil outlet tube using a new gasket and tighten the retaining bolts at the turbocharger to 20-25Nm (15-18 lbf ft).

8. Tighten the oil return tube to cylinder block connector,to 54-81Nm (45-50 lbf ft).

9. If disturbed the oil return tube to block connector should have sealer applied "See Specifications" and torqued to 27Nm (20 lbf ft).

10. Re-connect the air inlet, and outlet tubes, with the hose clamps, torque to 1.7-2.3Nm (15-20 lbs in).

11. Reconnect the fuel injection pump solenoid wire.

12. Check the engine oil level and add oil if required. Idle the engine and check all tubes and gaskets for leaks.

13. Run the engine at rated speed and listen for sounds of metallic contact from the turbocharger. If any noise is apparent, stop the engine immediately and correct the cause.

NOTE: *After the unit has obtained operating temperatures, the rotating assembly should coast freely to a stop after the engine is stopped. If the rotating assembly jerks to a sudden stop, the cause should be corrected immediately.*

MANIFOLDS

SPECIFICATIONS

Inlet Manifold	Aluminium - with Plenum Chamber
Exhaust Manifold	Cast Iron

TORQUE VALUES

TORQUE VALUES - VARIOUS	Nm	lbf ft	Kgf m
Intake Manifold-to-Cylinder Head	35	26	3.5
Exhaust Manifold-to-Cylinder Head	38	28	3.9
Exhaust Pipe-to-Flange	31	23	3.2

DESCRIPTION AND OPERATION

MANIFOLDS

The cross flow design aluminium intake, and cast iron exhaust manifolds, are on opposite sides of the cylinder head. This is designed to maintain balanced heat distribution within the cylinder head. The configuration of the manifolds also ensures minimum heat transfer to the intake manifold.

The intake manifold is connected through tubing to the air cleaner and in the rear end of the manifold a tapped hole is provided for installation of a thermostart or an ether cold starting aid.

NOTE: *On tractors where cold start equipment is not installed ensure the plug in the intake manifold is kept tight at all times. Considerable damage to the cylinder bores, may be incurred by entry of grit or other foreign material if the plug is left loose or missing. Also dirt and grit may be drawn through the air cleaner connections if they are not properly secured.*

The inlet manifold attached to the right hand side of the engine block is a one piece cast aluminium plenum chamber that directs the air from the air cleaner and into the cylinder head.

The exhaust manifold attached to the right hand side of the engine block is a one piece cast iron unit that channels the spent exhaust fumes into the muffler by way of tubing and clamps.

FAULT FINDING

IMPORTANT: *When effecting a repair the cause of the problem must be investigated and corrected to avoid repeat failures.*

The following table lists problems and their possible causes with recommended remedial action.

PROBLEM	POSSIBLE CAUSES	REMEDY
Engine power poor or runs roughly	10. Intake manifold leaking at joint face or cracked	1. Fit new gasket or fit new manifold
Excessive exhaust smoke	11. Exhaust leak on exhaust manifold side of turbocharger, where fitted	2. Fit new gasket

OVERHAUL

IMPORTANT: *Whenever it is necessary to remove the intake or exhaust manifolds from the engine new sealing gaskets must be fitted upon re-assembly.*

INSPECTION

1. Clean the intake manifold in a solvent that is suitable for aluminium and check for cracks or damage repair where practical. Small imperfections on the joint face can be dressed with a stone, but where they exceed a stone repair the manifold must be changed.

NOTE: *Intake manifold bolts have 'O' ring seals fitted.*

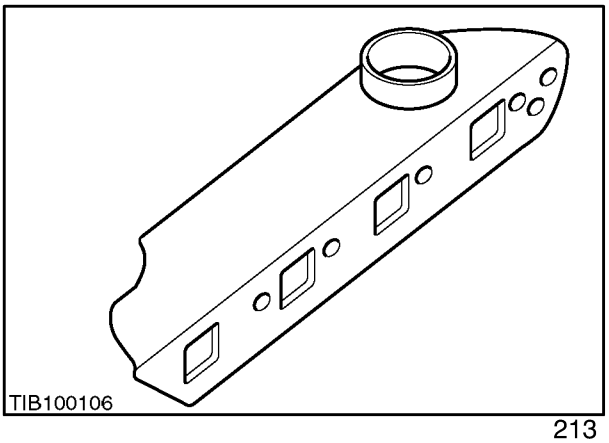

213

2. Clean the exhaust manifold in a suitable solvent removing the carbon deposits with a wire brush. check for cracks or damage to the joint face that could create an air leakage. Small imperfections can be dressed with a stone, but where they exceed a stone repair the manifold must be changed.

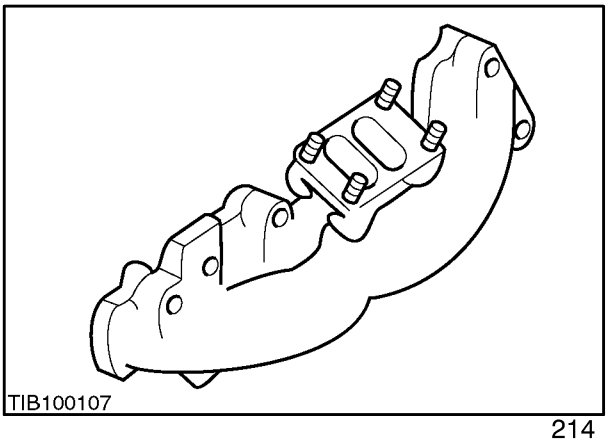

214

INSTALLATION

1. Prior to refitting the manifolds clean the cylinder head faces with light grit paper to remove any trace of old gaskets that may have remained on the head face during disassembly.

2. Place the bolts through the manifold to be fitted and through a new gasket, attach the manifold and gasket onto the cylinder head and torque the bolts on the:
   Intake manifold to 35Nm (26 lbf ft)
   Exhaust manifold bolts to 38Nm (28 lbf ft)

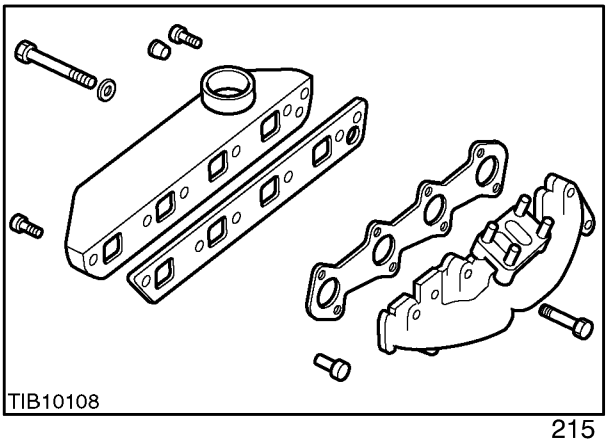

215

INDEX

Air cleaner description and operation 2-92
Air cleaner overhaul 2-93
Air cleaners 2-91
Balancer/vibration damper 2-44
Camshaft assembly 2-16
Camshaft bearings 2-54
Camshaft drive gear 2-32
Camshaft removal 2-53
Connecting rod bush 2-37
Connecting rods 2-16
Connecting rods, bearings, pistons, and rings, removal 2-35
Cooling 2-57
Cooling system description and operation .. 2-60
Cooling system overhaul 2-61
Crankshaft assembly 2-16
Crankshaft re-assembly 2-52
Crankshaft removal 2-51
Cylinder block assembly 2-16
Cylinder block overhaul 2-38
Cylinder bore 2-40
Cylinder head disassembly 2-25
Cylinder head installation 2-30
Cylinder head re-assembly 2-30
Diesel engine disassembly 2-19
Dry air cleaner 2-92
Electric lift pump 2-97
Engine compression test 2-55
Engine description and operation 2-16
Engine front cover and timing gear removal 2-31
Engine overhaul specifications 2-2
Engine timing marks 2-114
Fan belt tensioner 2-64
Flywheel removal 2-47
Fuel filter 2-80
Fuel filter/sediment separator 2-88
Fuel general 2-77
Fuel injection pump, adjustments 2-84
Fuel pump 2-81
Fuel system description and operation 2-79
Fuel tank 2-80
Fuel tanks, filters and fuel lines overhaul ... 2-87
Grease and sealants 2-11
Idler pulley 2-65
Idle speed adjustment 2-85
Injector description and operation 2-102
Injection pump 2-109
Injection pump removal 2-112
Injection pump timing 2-112
Injectors 2-81, 2-101
Lift pump electric emissionized engine only . 2-80
Lubrication 2-69
Lubrication system 2-17
Lubrication system description and operation 2-71
Main bearing removal 2-46
Manifolds 2-16, 2-133
Manifolds description and operation 2-134
Maximum no-load speed adjustment 2-85
Oil pan removal 2-35
Oil pump overhaul 2-73
Oil pump removal 2-49
Pistons 2-16
Precleaner 2-93
Priming the fuel system 2-84
Rear cover plate removal 2-48
Sediment separator 2-80
Sleeving – boring and honing 2-40
Special tools 2-11
Temperature warning sender 2-63
Thermostart 2-81
Thermostat removal 2-62
Timing gears 2-17
Torque values 2-10
Troubleshooting, air cleaner 2-93
Troubleshooting, cooling 2-59
Troubleshooting, electric lift pump 2-99
Troubleshooting, engine 2-12
Troubleshooting, fuel 2-82
Troubleshooting, lubrication 2-72
Troubleshooting, injectors 2-102
Troubleshooting, manifolds 2-134
Troubleshooting, turbocharger 2-121
Turbocharger 2-119
Turbocharger, description and operation ... 2-120
Tubrocharger, overhaul 2-125
Water pump removal 2-65

SECTION 3
ELECTRICAL SYSTEM
CONTENTS

ELECTRICAL INTRODUCTION 3-2

ELECTRONIC INSTRUMENT CLUSTER 3-23

ANALOGUE ELECTRONIC INSTRUMENT CLUSTER 3-49

ANALOGUE INSTRUMENT CLUSTER 3-57

STARTING SYSTEM 3-61

CHARGING SYSTEM 3-73

BATTERY 3-91

HARNESSES AND CONNECTORS 3-99

ELECTRICAL COMPONENT TESTING 3-131

DIAGNOSTIC 'H' ROUTINES 3-179

WIRING DIAGRAMS 3-225

INDEX 3-335

ELECTRICAL INTRODUCTION

ELECTRICAL EQUIPMENT SPECIFICATIONS

Alternator		12v. 100 amp - with cab 12v. 55 amp - less cab
Regulator		Integral with alternator
Battery		Minimum maintenance type - 12v. 800 cca Dual battery option - with cab
Starting motor		Positive engagement, solenoid operated
Cold starting aid		Thermostart (with electric timer) Block heater optional
Bulb rating and type:	Headlights	60/55W - H4
	Position lights	5W - R5W
	Work lights	55W - H3
	Turn signals	21W - P21W
	Stop/tail lights	21/5W - P21/5W
	Licence plate lights	10W - R19/10

ELECTRICAL SYSTEM AND FUSES

The electrical system of all tractors consists of various wiring harnesses, instrument clusters, and switches. A micro-processor is also used to control the 16x16 transmission, the 12x12 Dual Command transmission and Electronic Draft Control where fitted.

There are three instrument clusters available, Electronic Instrument Cluster (EIC), Analogue/Electronic Instrument Cluster (AEIC) and an Analogue Instrument Cluster (AIC).

The Key start switch has five positions:

1. Thermostart
2. 'Off'
3. Accessory 'on'
4. Warning lamp and instruments 'on'
5. Start

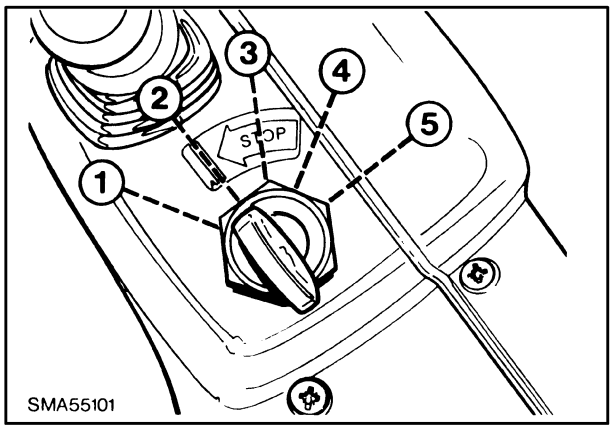

1

There are two battery options.

Standard 1 x 800 CCA, Figure 2.

Optional 2 x 800 CCA (with cab only)

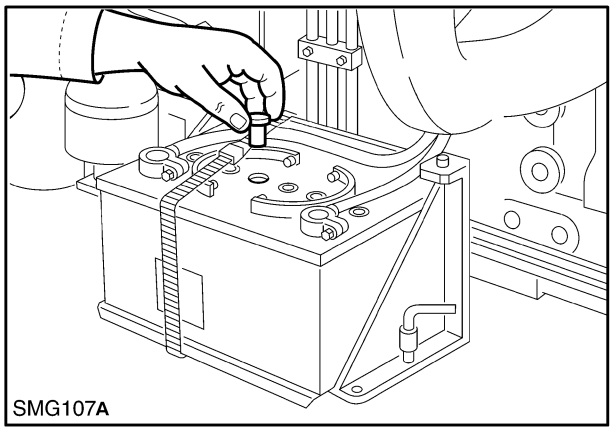

2

There are two alternator options:

55 Amp Standard less cab

100 Amp Standard with cab

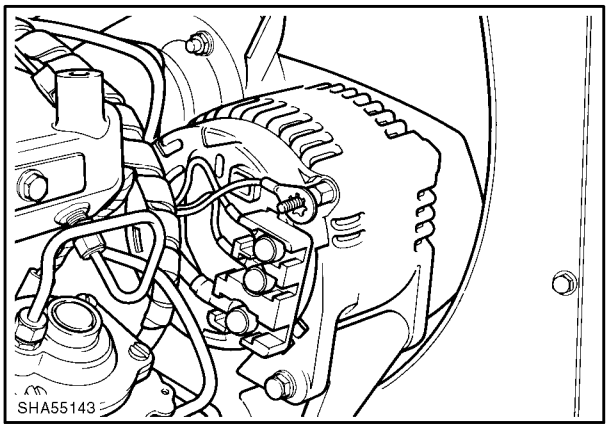

3

There is one starter motor specification with two manufacturers supplying:

Bosch 3.1Kw / Iskra 3.1Kw

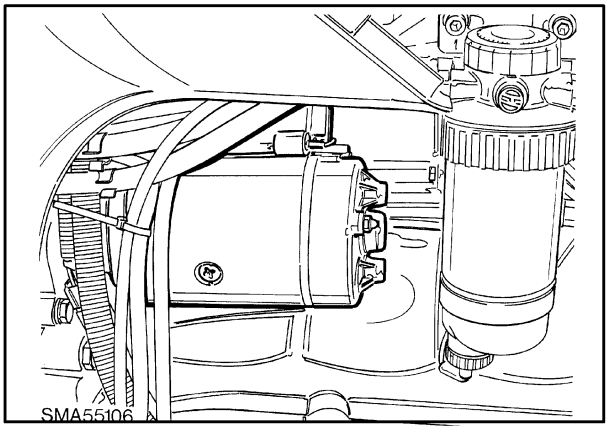

4

Fuses and Relays

The Main Distribution Panel (MDP), or fuse box, is located behind the right hand instrument cluster console side panel.

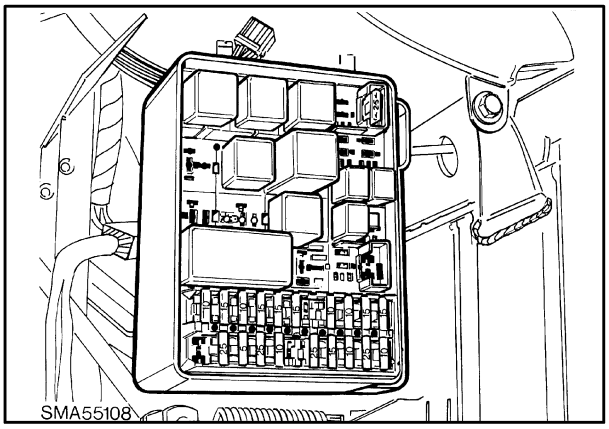

5

For primary protection the main supplies from the starter solenoid are fed through Maxi-Fuses. These are heavy duty fuses ranging from 30 to 60 amps and are located behind the left hand instrument cluster console side panel.

6 maxi fuses are used on with cab models, Figure 6.

Tractors with cab

Fuse No.	Rating	Colour
1	50A	Red
2	60A	Blue
3	30A	Green
4	60A	Blue
5	30A	Green
6	40A	Amber

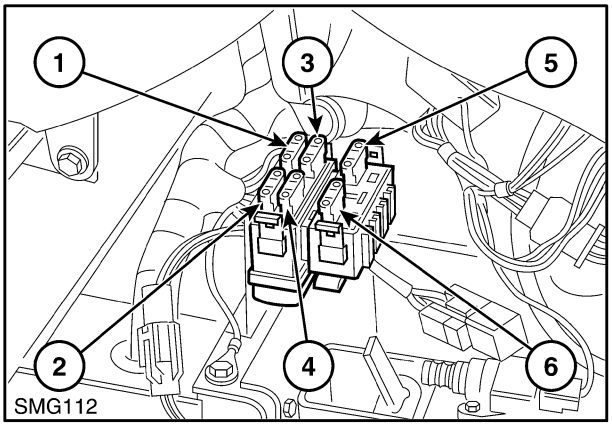

6

4 maxi fuses are used on less cab models, Figure 7.

Tractors without cab

Fuse No.	Rating	Colour
1	30A	Green
2	30A	Green
3	30A	Green
4	30A	Green

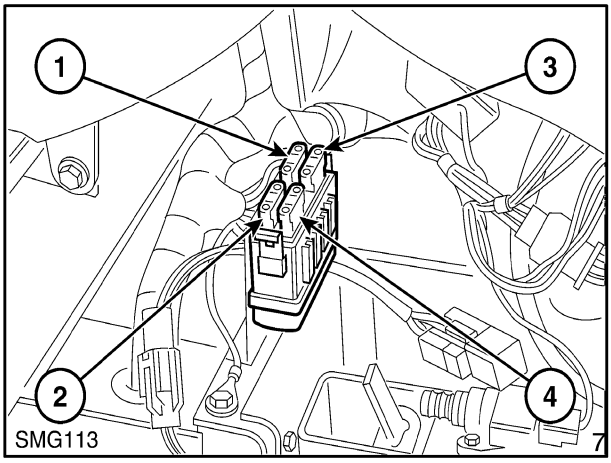

The maxi fuses for with cab tractors protect the circuits shown in the right hand column:

Maxi Fuse 1 (50 Amp)	To ignition relay and supplying Fuses 9/14/15/16/17/18/21
Maxi Fuse 2 (60 Amp)	To ignition switch and supplying fuses 8/10/11/12/13/20/22 and Thermostrt Module (Fuse 19)
Maxi Fuse 3 (30 Amp)	Turn switch and supplying fuses 1/2/3/4
Maxi Fuse 4 (60 Amp)	Fuses 5/6/7 (Worklamps)
Maxi Fuse 5 (30 Amp)	Fuses 23/24 (Accessories)
Maxi Fuse 6 (40 Amp)	40 Amp Implement Sockets

The maxi fuses for less cab tractors protect the circuits shown in the right hand column:

Maxi Fuse 1 (30 Amp)	To ignition relay and supplying fuses 9/15
Maxi Fuse 2 (30 Amp)	To ignition switch and thermostart module (fuse 10)
Maxi Fuse 3 (30 Amp)	Light switch feed
Maxi Fuse 4 (30 Amp)	Implement lamp switch (fuse 6)

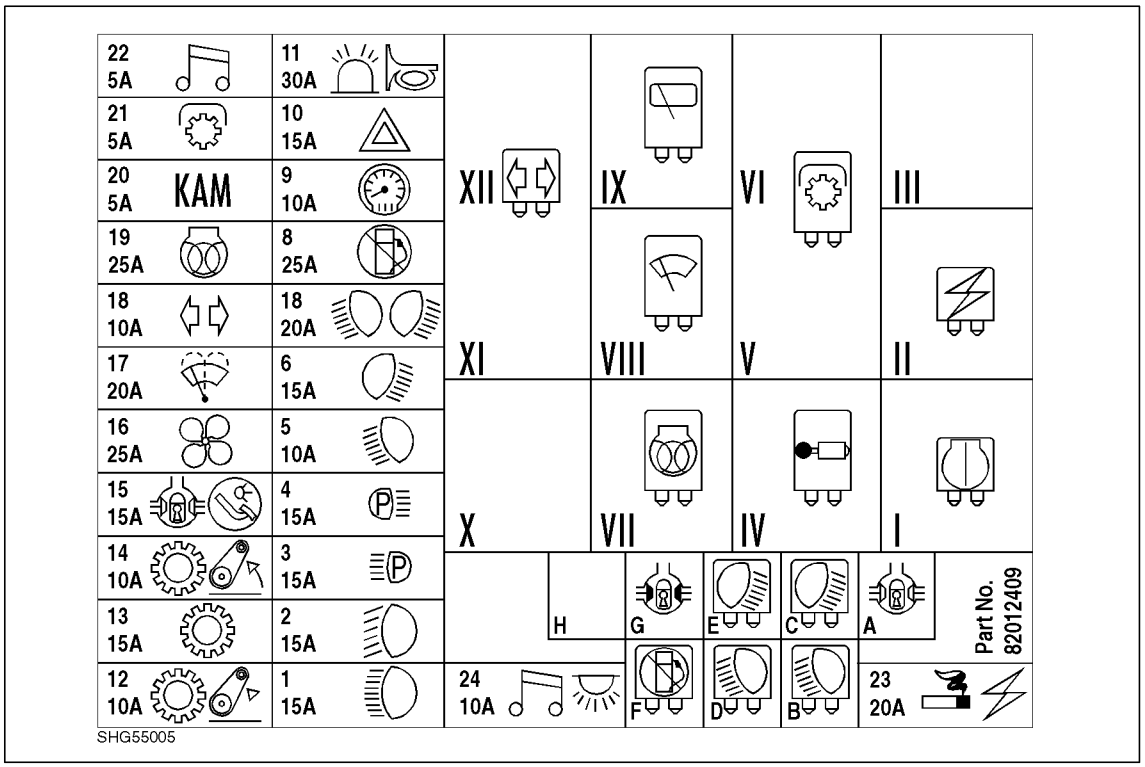

Relay	***Function***
A	Diff-lock (12x12 only)
B	Worklamp Relay - Front (Roofline)
C	Worklamp Relay - Rear (Roofline)
D	Worklamp Relay - Lower Front
E	Worklamp Relay - Lower Rear
F	Busbar (Fuel Shut Off Relay)
G	Diff-lock (12x12)
H	Not Used
I	Ignition Relay
II	Accessory Socket

Relay	***Function***
III	Not Used
IV	Remote Valve Module
V & VI	Power take-off Module
VII	Thermostart Module
VIII	Front Intermittent wipe
IX	Rear intermittent wipe
X	Blank
XI & XII	Flasher module

No.	*Amps.*	***Circuit***
1	**15**	Headlamp - Main
2	**15**	Headlamp - Dip
3	**15**	Sidelamp - Right Hand
4	**15**	Sidelamp - Left Hand
5	**10**	Worklamp - Front (Low)
6	**15**	Worklamp - Rear (Fenders)
7	**20**	Worklamp - Front & Rear (Cab Roof)
8	**10**	Fuel Shut-Off
9	**10**	Gauges/External Switches
10	**15**	Hazard Lights
11	**30**	Horn/Headlamp Flasher/Cigar Lighter/Roof Beacon
12	**10**	EDC
13	**15**	Transmission solenoids

No.	*Amps.*	***Circuit***
14	**10**	EDC
15	**15**	Stoplamps/4wd/Diff. lock
16	**25**	Air conditioning/Heater Fan
17	**20**	Wiper Washer/Front Wiper/Rear Wiper/Console Lamp
18	**10**	Turn Indicators
19	**25**	Thermostart
20	**5**	Processor 'Keep Alive Memory' (KAM)
21	**5**	P.T.O.
22	**5**	Radio/Implement socket switch & relay
23	**20**	Accessories/Interior lamp/Radio KAM/EIC buzzer
24	**10**	Interior Light

Micro Processors

The tractor can have a maximum of 2 processors (including an Electronic Instrument Cluster, where fitted). With the transmission/EDC processor connected to the instrument cluster by a serial link for cluster display.

Electronic Instrument Cluster

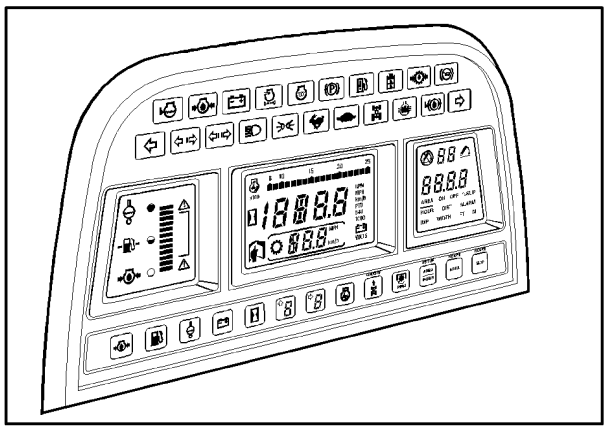

8

16x16 transmission / 12x12 Dual Command Transmission processor and EDC, where fitted, processor.

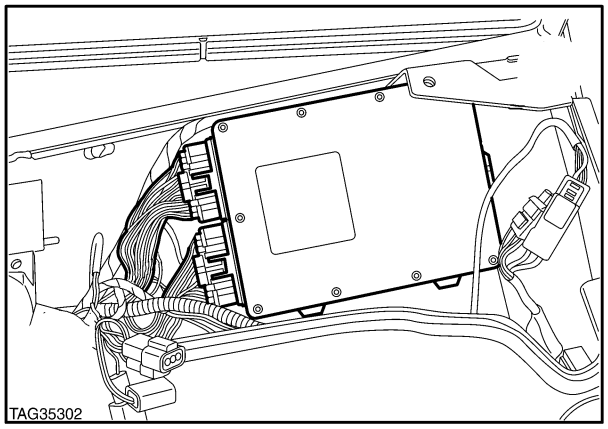

9

CAB CONTROLS

The information on the following pages identifies, locates and briefly describes the function of the controls and instruments located in the cab. Some of the features shown may not be fitted to your tractor or may not be available in your country.

The controls have been divided into the following areas:

Cab/platform controls - Figure 1 and Figure 2.

Instrument console controls - Figure 3 and Figure 4.

Instrument panels - Figure 5 to Figure 7.

Overhead controls - Figure 8.

Transmission controls - Figure 9 to Figure 11.

Right-hand 'B' pillar - Figure 12.

Electrical power panel - Figure 13.

P.T.O. controls - Figure 14 to Figure 16.

Differential lock and four wheel drive - Figure 17 and Figure 18.

Hydraulic controls (top link sensing) - Figure 19.

Electronic Draft Control - Figure 20 to Figure 22.

IMPORTANT: *The following information in this section is provided as a quick reference guide and is not intended as a replacement for the detailed operational information that appears in the Operators Manual, Section 2 -* 'OPERATION'*. For details on how to use the controls and check the instruments and warning lights read the whole of Section 2 of the Operators Manual before operating the tractor.*

CAUTION: *Do not operate the tractor until you are thoroughly accustomed with the location and operation of all controls.*

GENERAL VIEW OF TRACTOR CONTROLS – with cab

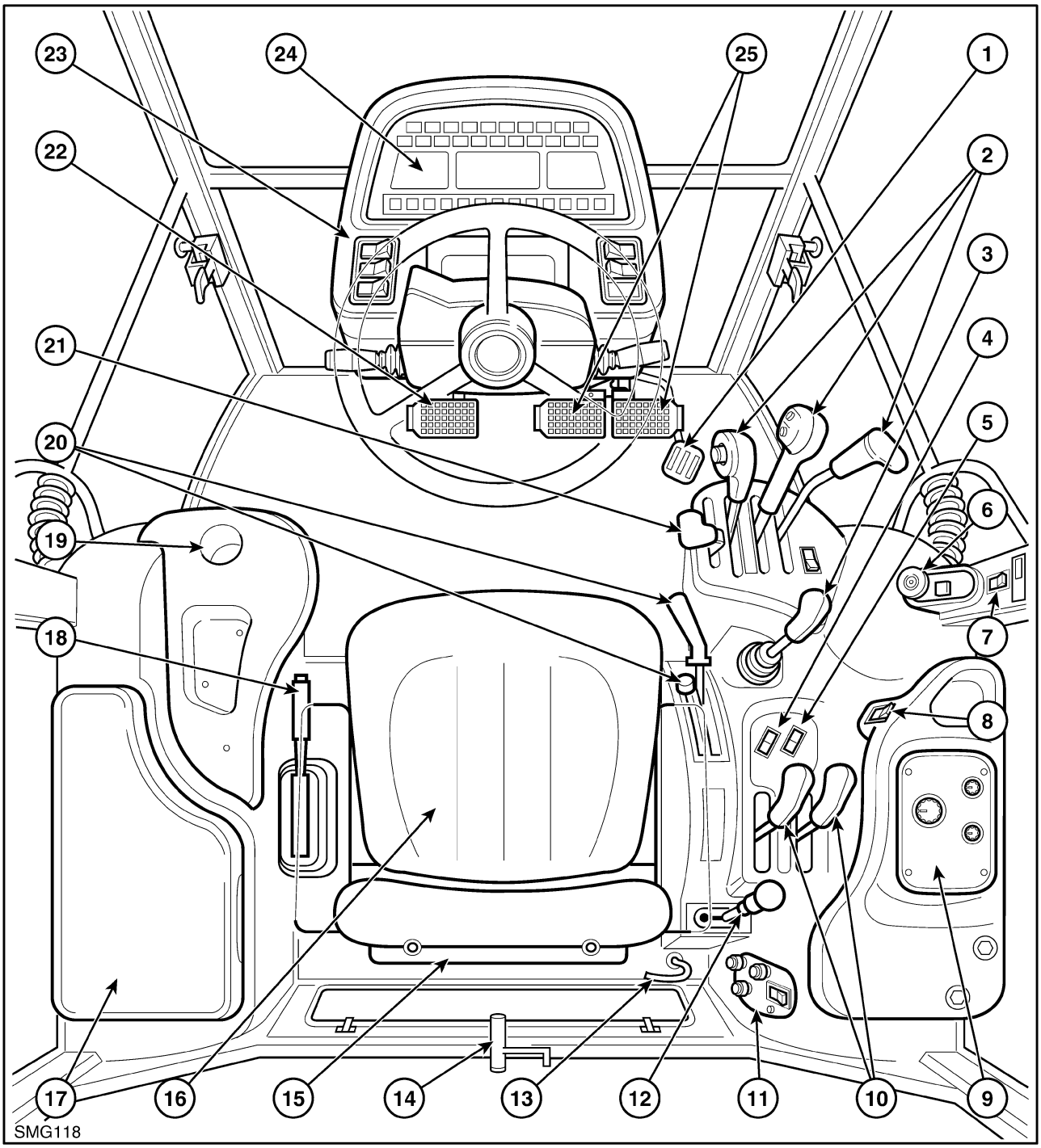

Figure 1 General View of Tractor Controls (tractors with cab)

1. Foot throttle
2. Transmission controls
3. Remote control valve joystick
4. Four wheel drive switch
5. Differential lock switch
6. P.T.O. controls
7. Clock and rear wiper switch
8. Raise/lower switch
9. Electronic Draft Control panel
10. Remote control valve levers
11. Electrical accessory panel
12. P.T.O. range selector
13. Hitch release handle
14. Rear window latch
15. Document pouch
16. Operator's seat
17. Storage box
18. Parking brake
19. Storage/drinks tray
20. Hydraulics lift controls
21. Hand throttle
22. Clutch/inching pedal
23. Instrument console & switches
24. Instrument panel
25. Foot brakes

GENERAL VIEW OF TRACTOR CONTROLS – less cab

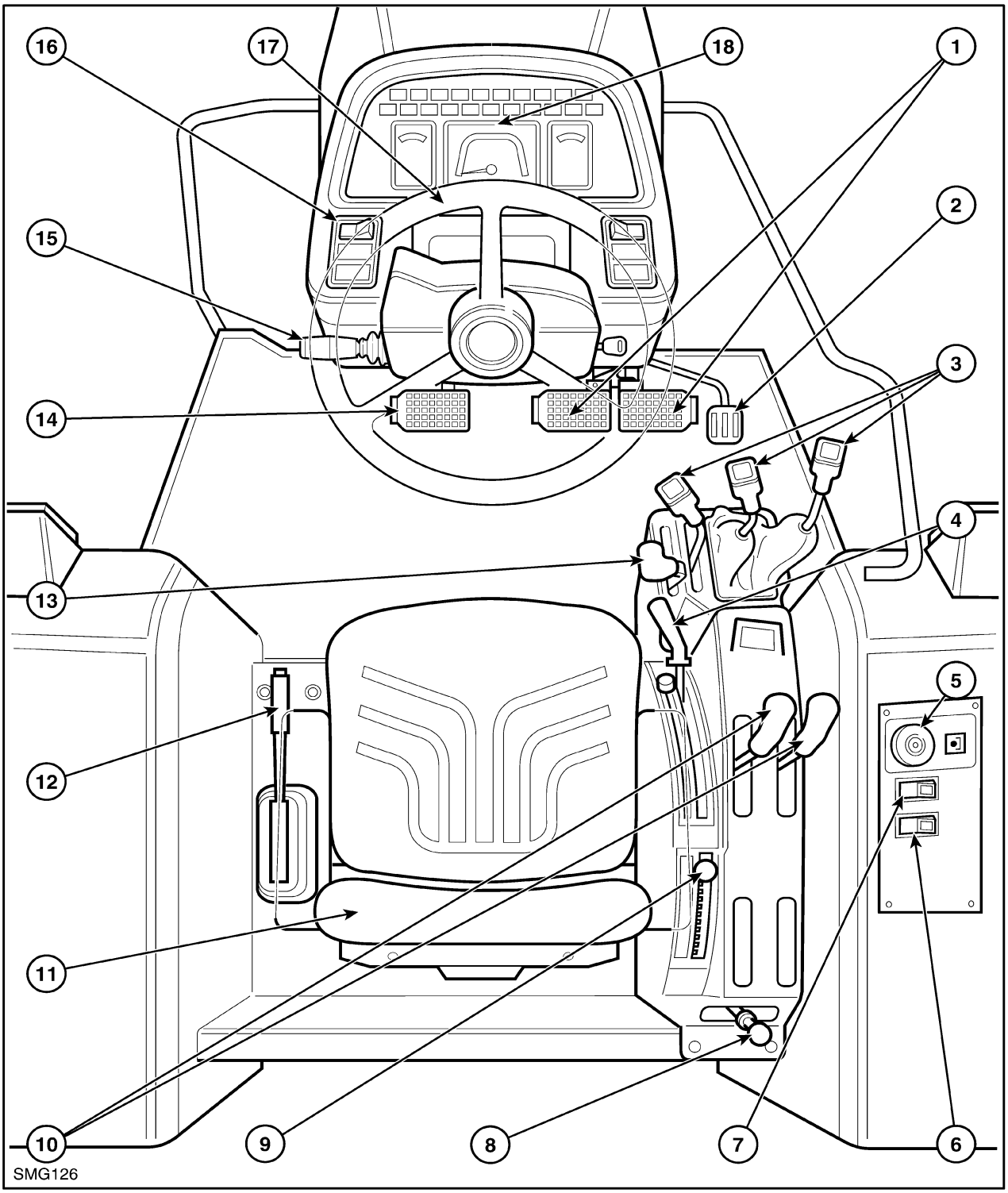

Figure 2 General View of Tractor Controls (tractors without cab)

1. Foot brakes
2. Foot throttle
3. Transmission controls
4. Hydraulic lift control lever
5. P.T.O. selector knob
6. Four wheel drive switch
7. Differential lock switch
8. P.T.O. range selector
9. Position/Draft selector
10. Remote control valve levers
11. Operator's seat
12. Parking brake
13. Hand throttle
14. Clutch/inching pedal
15. Multi-function switch
16. Instrument console and switches
17. Steering wheel
18. Instrument panel

INSTRUMENT CONSOLE CONTROLS

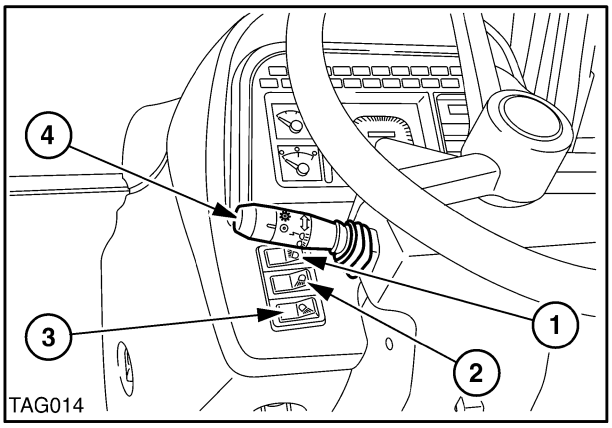

Figure 3 – Instrument Console – left-hand side

1. Work lamp switch – front, roof–mounted
2. Work lamp switch – front, low–mounted
3. Work lamp switch – rear
4. Multi-function switch

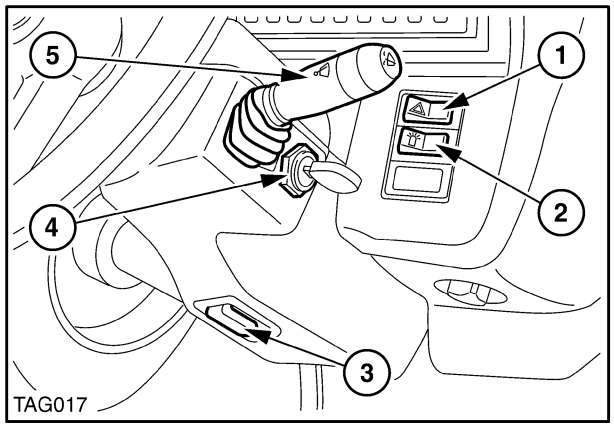

Figure 4 – Instrument Console – right-hand side

1. Hazard warning lights switch
2. Roof beacon switch (where fitted) *
3. Steering column clamp lever
4. Key–start switch
5. Windscreen wipe/wash control

* Tractors without cab may have the optional creeper gears switch in this location.

Refer to the Operators Manual for complete operating instructions.

INSTRUMENT PANELS

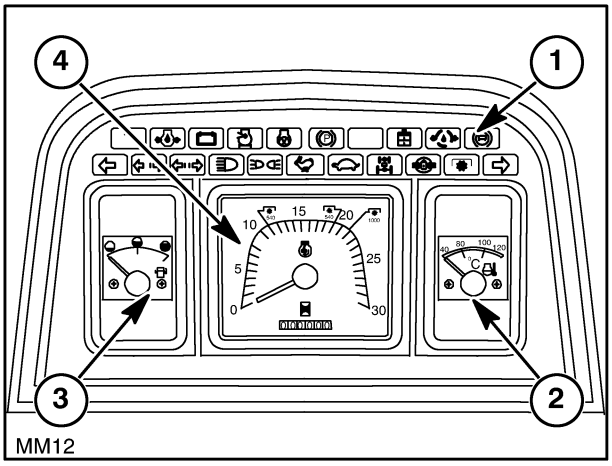

Figure 5 – Analogue Instrument Panel

1. Warning and indicator lights
2. Engine coolant temperature gauge
3. Fuel gauge
4. Proofmeter

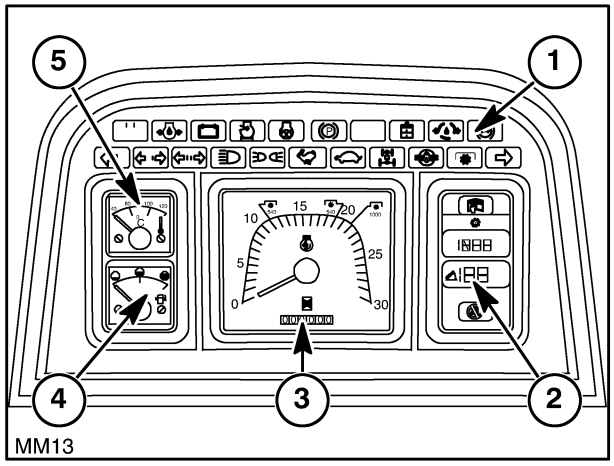

Figure 6 – Analogue/Electronic Instrument Panel

1. Warning and indicator lights
2. Liquid crystal display panel
3. Proofmeter
4. Fuel gauge
5. Engine coolant temperature gauge

Refer to Chapters 4 and 3 of this Section for full details

INSTRUMENT PANELS

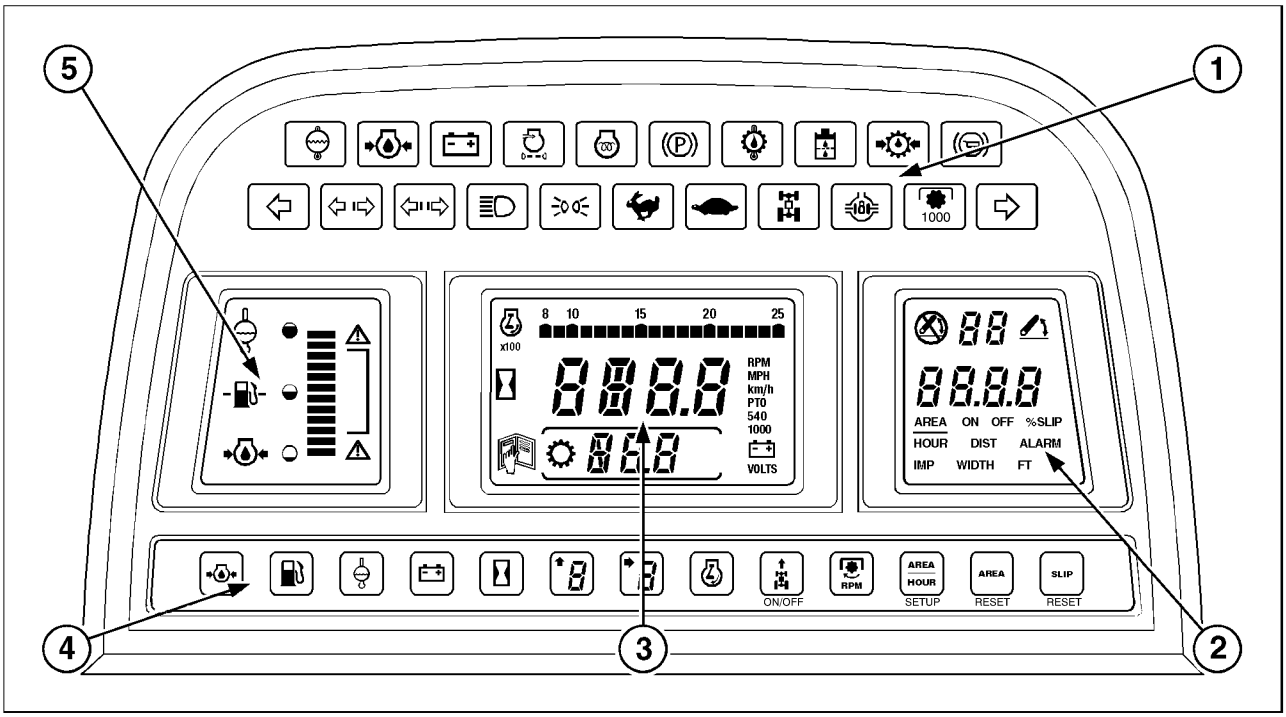

Figure 7 Electronic Instrument Panel

1. Warning and indicator lights
2. Tractor Performance Monitor (LCD)
3. Central display panel (LCD)
4. Function buttons
5. Bargraph display (LCD)

Refer to Chapter 2 of this Section for full details

CAB ROOF-MOUNTED CONTROLS

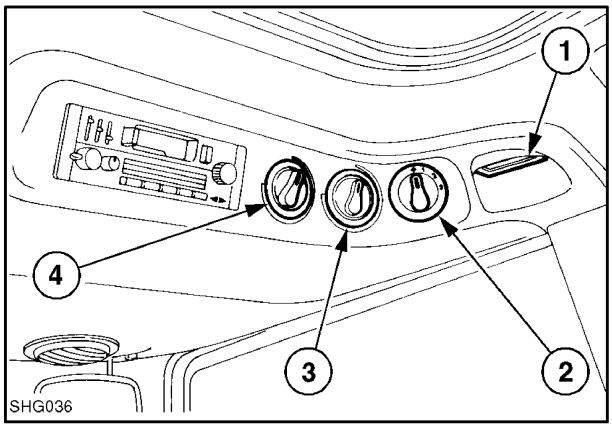

Figure 8 – Roof-mounted Controls

1. Console light – illuminates when tractor lights are turned on.
2. 3-speed blower control
3. Air conditioner temperature control (where fitted)
4. Heater temperature control

Refer to the Operators Manual for complete operating instructions.

TRANSMISSION CONTROLS

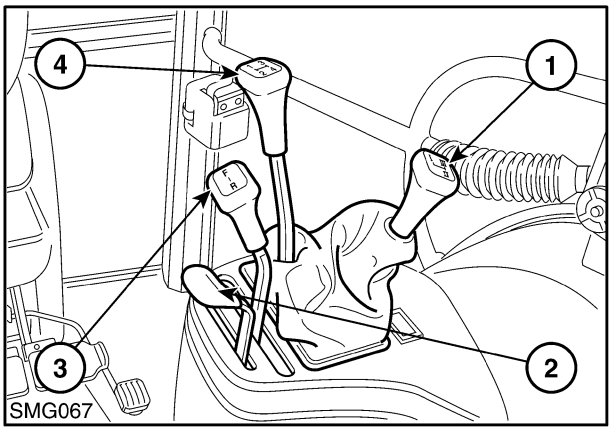

Figure 9 – 12 x 12 Transmission Controls

1. Range lever (3 ranges)
2. Hand throttle lever
3. Shuttle lever
4. Main shift lever (4 ratios)

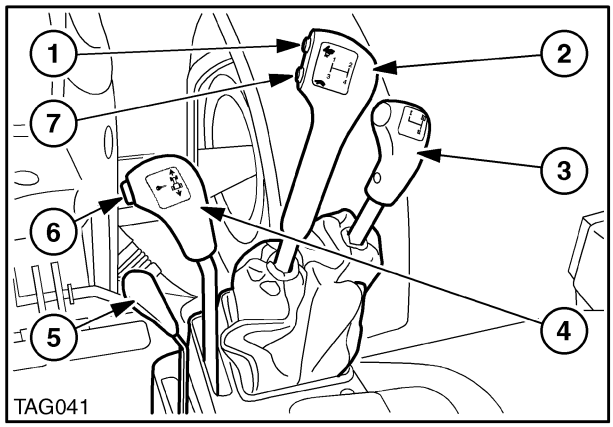

Figure 10 – 24 x 24 Transmission Controls (Dual Command option)

1. Direct drive button
2. Main shift lever (4 ratios)
3. Range lever (3 ranges)
4. Shuttle lever
5. Hand throttle lever
6. 'Dump' switch
7. Underdrive button

Refer to the Operators Manual for complete operating instructions.

TRANSMISSION CONTROLS

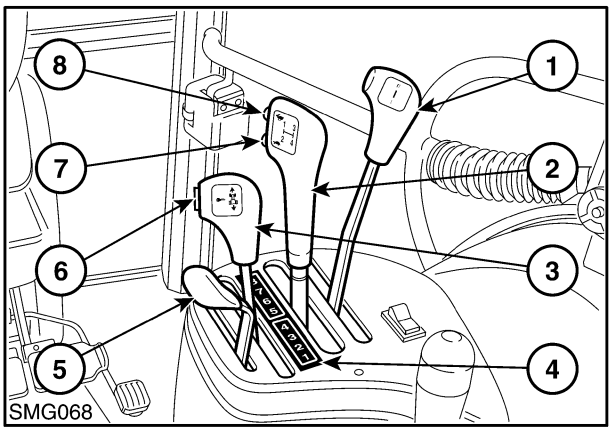

Figure 11 – 16 x 16 transmission Controls

1. Range lever (4 ranges)
2. Main shift lever (4 ratios)
3. Shuttle lever
4. Illuminated gear display
5. Hand throttle lever
6. 'Dump' switch
7. Powershift down button
8. Powershift up button

RIGHT-HAND 'B' PILLAR

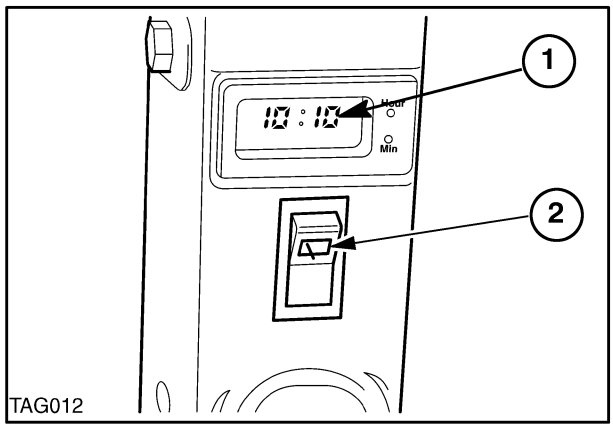

Figure 12 – Right-hand 'B' Pillar (tractors with cab)

1. Clock
2. Rear windscreen wipe/wash switch (where fitted)

Refer to the Operators Manual for complete operating instructions.

ELECTRICAL POWER PANEL

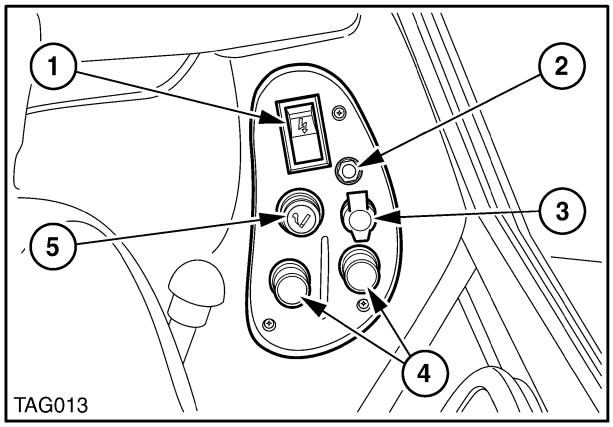

Figure 13 - Electrical Power Panel

1. Switch (power to screw terminals (4) and to external 40 amp socket)
2. Implement status socket
3. Live, 2-pin, 8 amp socket
4. 40 amp screw terminals
5. Cigar/cigarette lighter

P.T.O. CONTROLS

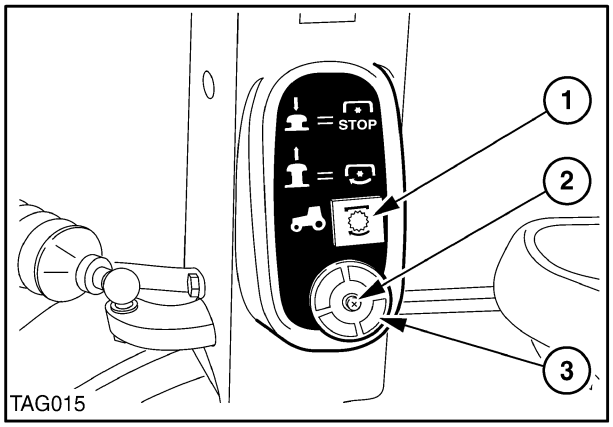

Figure 14 - P.T.O. Switch (tractors with cab)

1. P.T.O. indicator lamp
2. Push button
3. P.T.O. selector knob

Press the central button and lift knob to engage the P.T.O. Press the knob to disengage.

Refer to the Operators Manual for complete operating instructions.

P.T.O. CONTROLS

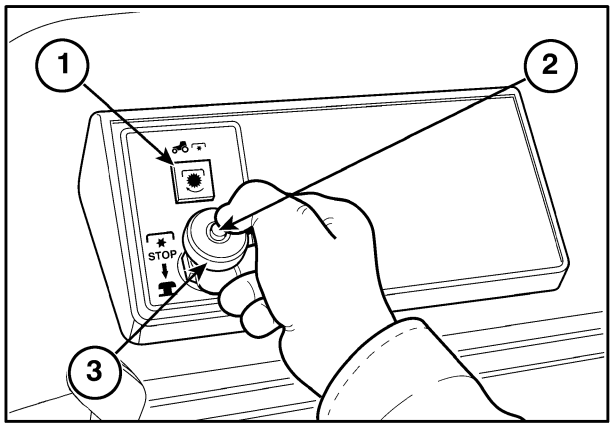

Figure 15 - P.T.O. Switch (tractors without cab)

1. P.T.O. indicator lamp
2. Push button
3. P.T.O. selector knob

Press the central button and lift knob to engage the P.T.O. Press the knob to disengage.

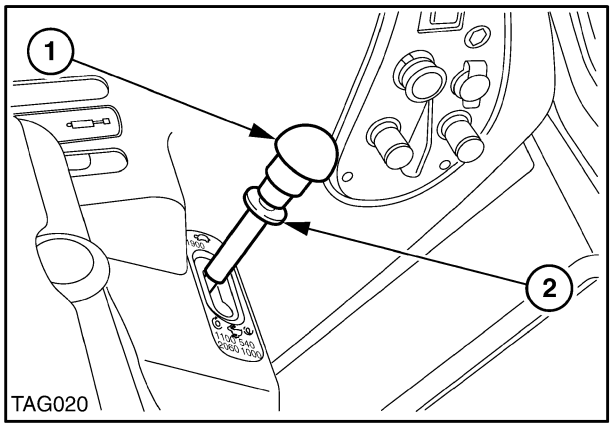

Figure 16 - P.T.O. Controls (right-hand console - rear)

1. P.T.O. range selector lever
2. Safety lock collar - lift collar to move lever.

Refer to the Operators Manual for complete operating instructions.

DIFFERENTIAL LOCK AND FOUR WHEEL DRIVE

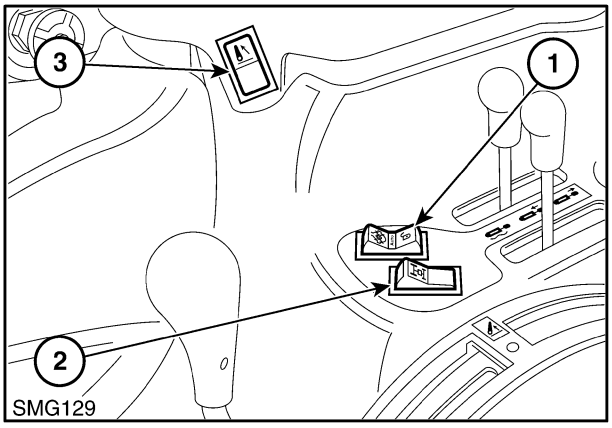

Figure 17 – Differential Lock and Four Wheel Drive (tractors with cab)

1. Differential lock switch
2. Four wheel drive switch
3. Fast raise switch (Electronic Draft Control only)

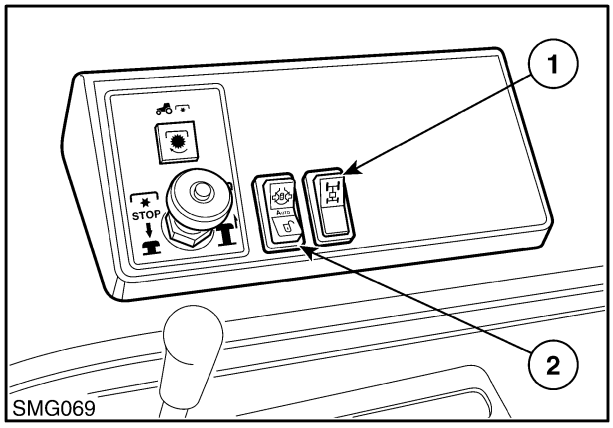

Figure 18 – Differential Lock and Four Wheel Drive (tractors without cab)

1. Four wheel drive switch
2. Differential lock switch

Refer to the Operators Manual for complete operating instructions.

HYDRAULICS CONTROLS – TOP LINK SENSING

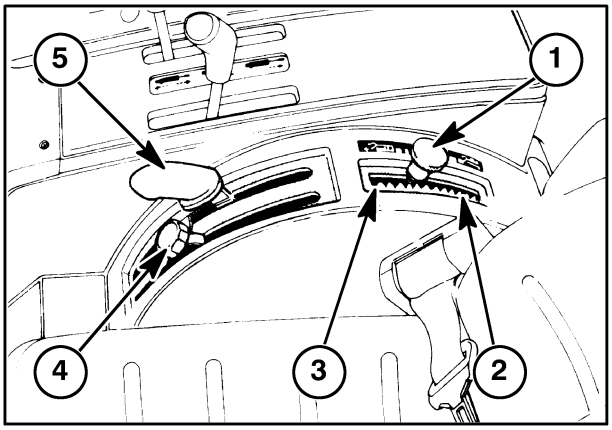

Figure 19 – Hydraulic Controls – Top Link Sensing

1. System selector – ease to the right, then move backward for Position Control or forward for Draft Control
2. Position Control setting
3. Draft Control setting
4. Adjustable stop
5. Lift control lever

HYDRAULICS CONTROLS – ELECTRONIC DRAFT CONTROL

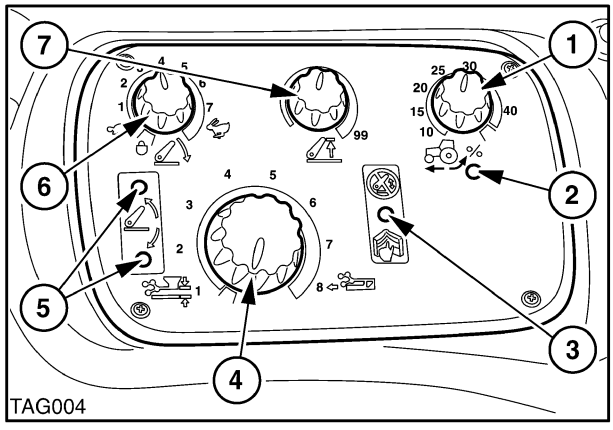

Figure 20 – Hydraulic Control Panel (tractors with cab only)

1. Slip limit control knob (with radar option)
2. Slip limit on indicator light (with radar option)
3. Malfunction warning light
4. Position/Draft sensitivity knob
5. 3-point linkage movement indicators
6. Drop rate control knob
7. Height limit control knob

Refer to the Operators Manual for complete operating instructions.

HYDRAULICS CONTROLS – ELECTRONIC DRAFT CONTROL

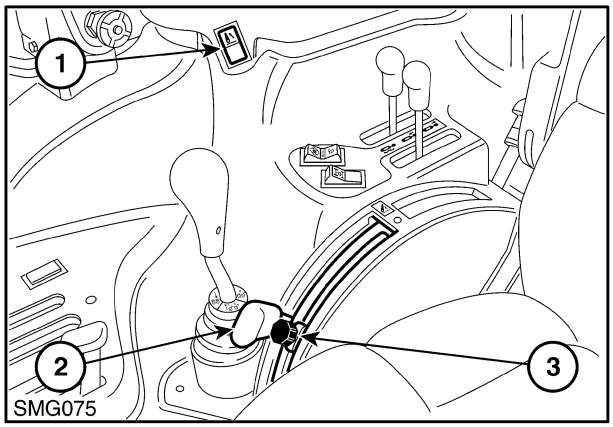

Figure 21 – Hydraulic Controls (tractors with cab only)

1. Fast raise switch (with Electronic Draft Control only)*
2. Lift control lever
3. Adjustable stop

* Press top of switch to raise 3-point linkage, hold bottom of switch to lower quickly. Central position allows implement to lower at rate set by drop rate knob.

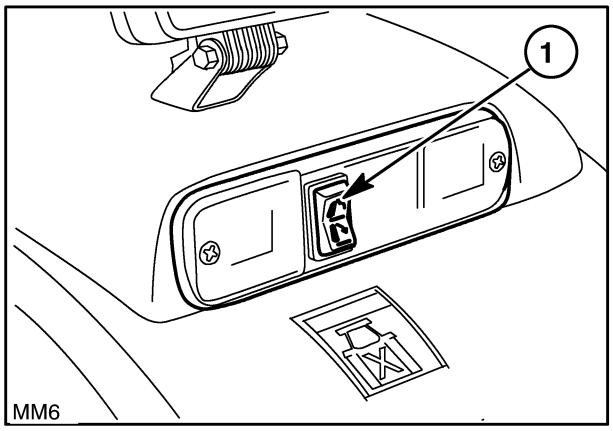

Figure 22 – External Power Lift Control

1. Fender-mounted raise/lower switch – press top to raise 3-point linkage, press bottom to lower.

Refer to the Operators Manual for complete operating instructions.

PROTECTION OF ELECTRICAL SYSTEMS DURING CHARGING OR WELDING

PRECAUTIONS

To avoid damage to the electronic/electrical systems, always observe the following:

1. Never make or break any of the charging circuit connections, including the battery connections, when the engine is running.

2. Never short any of the charging components to earth (ground).

3. Do not use a slave battery of higher than 12 volts nominal voltage.

4. Always observe correct polarity when installing the batteries or using a slave battery to jump start the engine. Follow the instructions in the operator's manual when jump starting the tractor. Connect positive to positive and negative to negative.

5. Always disconnect the earth (ground) cable from the batteries before carrying out arc welding on the tractor or on any implement attached to the tractor.

- Position the welder earth (ground) cable clamp as close to the welding area as possible and ensure a good earth.
- Never allow welding cables to lay on, near or across any electrical wiring or electronic component while welding is in progress.

6. Always disconnect the negative cable from the batteries when charging the batteries in the tractor with a battery charger.

WARNING: *Batteries contain sulphuric acid. In case of contact with skin, flush the affected area with water for five minutes. Seek medical attention immediately. Avoid contact with the skin, eyes or clothing. Wear eye protection when working near batteries.*

IMPORTANT: *Failure to disconnect the two earth (ground) cable connections at the battery prior to charging the batteries or welding on the tractor or attached implement will result in damage to the electronic and electrical systems.*

SWITCH REMOVAL AND REPLACEMENT

Switch removal and replacement such as the hazard warning light type of switch, (1), Figure 23, are best removed from behind the switch, although it is possible to prise the switch out from the front, damage may occur to the paint or plastic of the console.

To remove and replace any of the roof console switches, (heater controls), it is necessary to remove the front panel of the cab roof. Pull of the knob and remove the nut and washer from the switch, from inside the cab and withdraw the switch from the top of the cab.

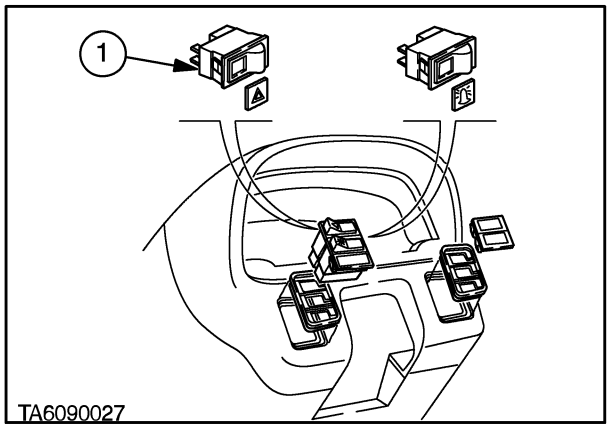

23

Key Start Switch – Removal and Replacement

1. Disconnect the tractor battery.
2. Remove the steering column covers.
3. Disconnect the wiring connector to the harness, remove the nut (1) securing the switch (2) Figure 24, to the cover and withdraw.
4. Replacement is the reversal of the removal procedure.

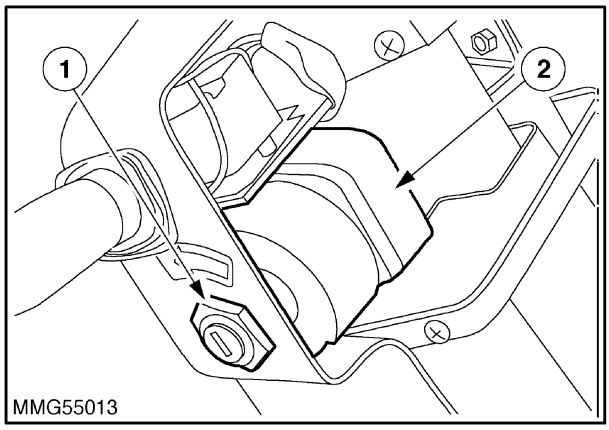

24

Multi Function Stalk Switches – Removal and Replacement

1. Disconnect the tractor battery.
2. Remove the steering column covers (1) Figure 25.
3. Disconnect the wiring connector (2) Figure 25, to the harness from the switch and remove the screws retaining the switch to the column bracket.
4. Replacement is the reversal of the removal procedure.

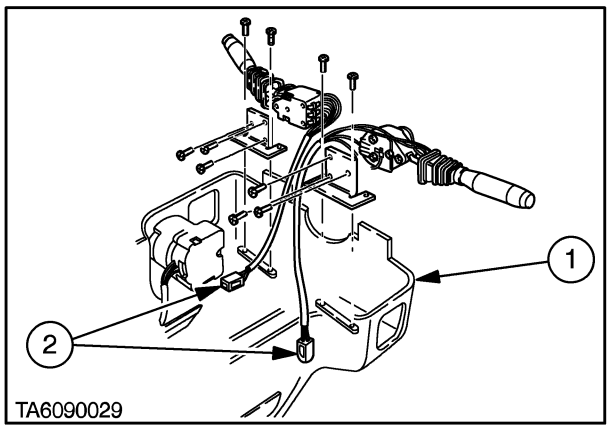

25

P.T.O. Switch Replacement - Figure 27

1. Remove the right hand B-Pillar trim, (1), Figure 26.

2. Unscrew and remove the yellow knob.

3. Remove the nut securing the switch to the trim withdraw the switch from the trim and disconnect the wiring, noting the positions for reassembly.

4. Replacement is the reversal of removal.

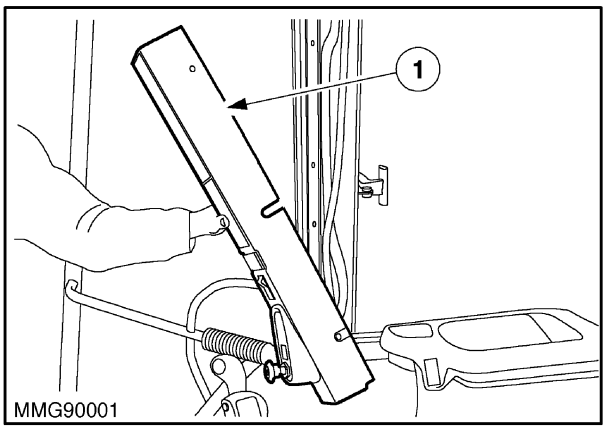

26

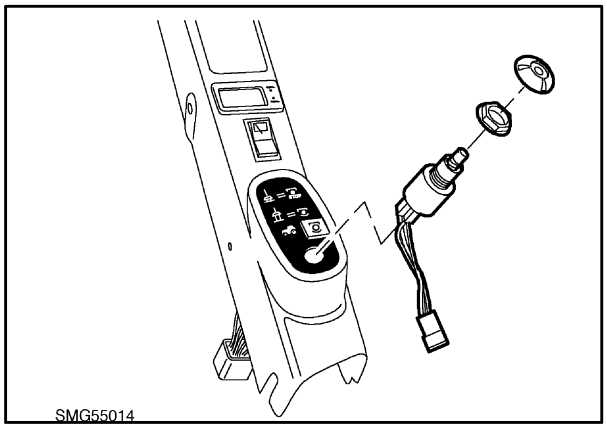

27

Handbrake Switch Replacement - Figure 28

1. Ensure the handbrake (1) is applied.

2. Disconnect the wiring connector (3) to the harness from the switch.

3. Remove the two split pins (2) retaining the switch and withdraw the switch from the bracket.

4. Replacement is the reversal of removal.

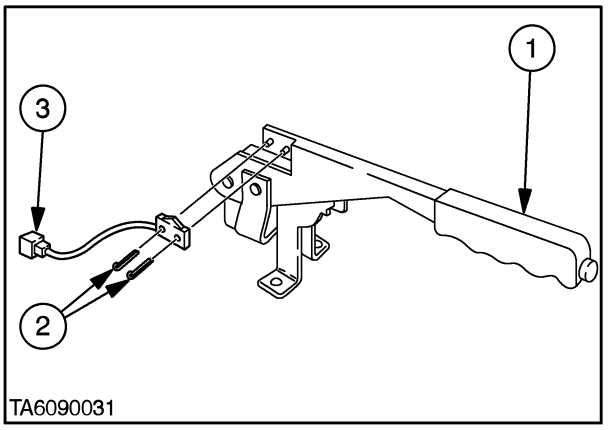

28

Clutch Pedal Switch adjustment (16x16 and 12x12 Dual command Transmissions)

Install the diagnostic tool, FNH00874, into the diagnostic connector. Turn the key start 'on' and select mode HA.

Depress the clutch pedal and listen for the 'click' of the switch. Note the number displayed. Release the pedal slowly until the switch 'clicks' again and observe the number displayed.

The switch should operate between 8–14.

If the switch operation is outside the range, adjust the switch by loosening the switch retaining screws and sliding in the slots until correct adjustment is obtained.

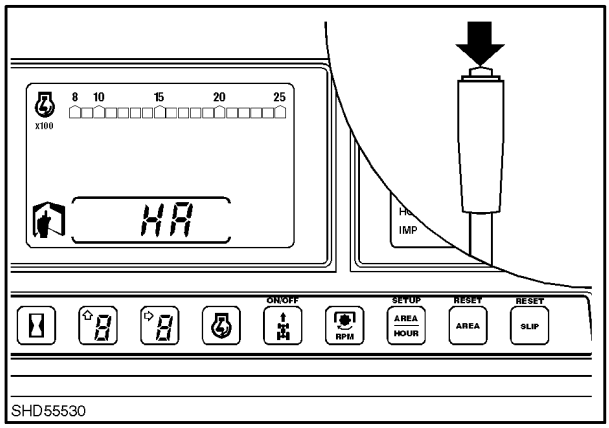

29

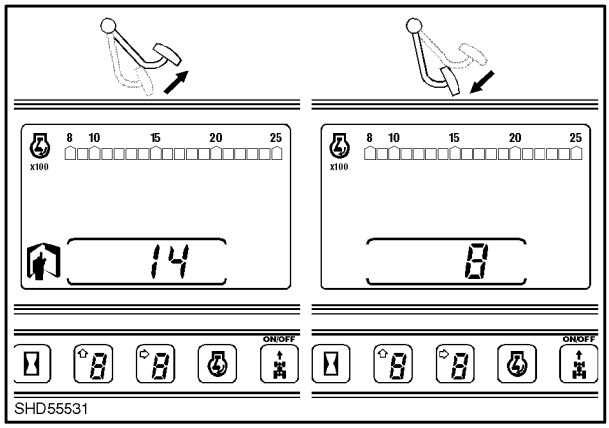

30

Brake Pedal Switches Adjustment

Locate a 2.5mm (0.10 inch) thick gauge bar between the switch and brake pedal. Loosen the switch retaining screws.

Push the switch towards the brake pedal to the limit of the plunger travel whilst ensuring that the pedal remains stationary. Tighten the retaining screws and remove the gauge. Repeat for the other switch.

After adjustment ensure that both switches can be heard operating and operating simultaneously.

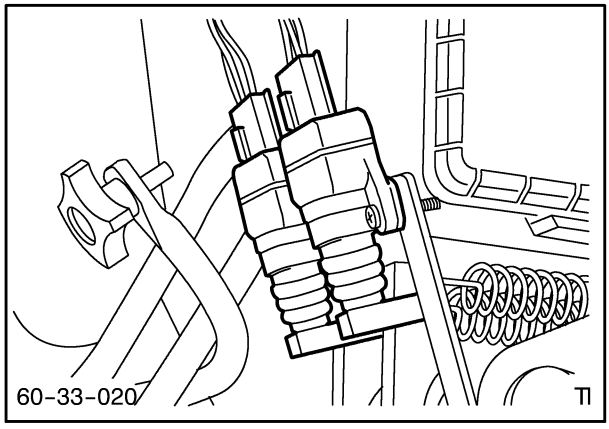

31

Temporary Wiring Harness Repair

The following method to repair wiring is a temporary expedient only. Wiring should be replaced as soon as possible. Replacement of temporary repaired cables with new is particularly important if the tractor is to be used for spraying as chemicals can enter the repaired area, travel up the cable and damage electrical components. Do not attempt to repair the wire on any system sensors as these are sealed and should only be replaced with a new component.

NOTE: *When conducting a cable repair it is important that only RESIN CORED SOLDER is used. Use of other types of solder may result in further cable damage.*

To carry out a temporary repair, proceed as follows:–

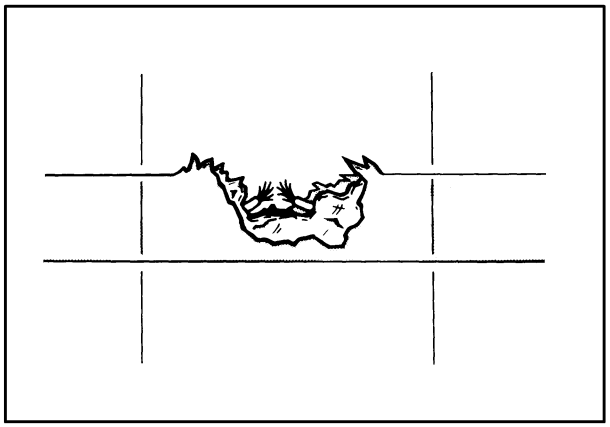

32

1. Locate damaged portion of cable then cut away outer protective cover on both sides of the damaged area, Figure 32.

2. Peel back the cable from both ends of the damaged area and carefully cut away the inner cable cover at the damaged area and strip about 13 mm ($^1/_2$ inch) of insulation from the wires. Do not cut away any wire strands.

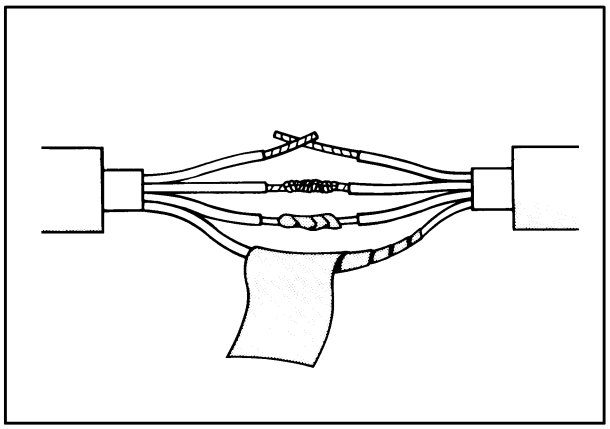

33

3. Using a suitable solvent, clean about 2 inches (50 mm) from each cover end. Clean the grey cable cover and the individual leads.

4. Twist two bare leads together for each damaged lead, being careful to match wire colours, then solder the leads using resin cored solder. Tape each repaired lead with vinyl insulation tape, Figure 33.

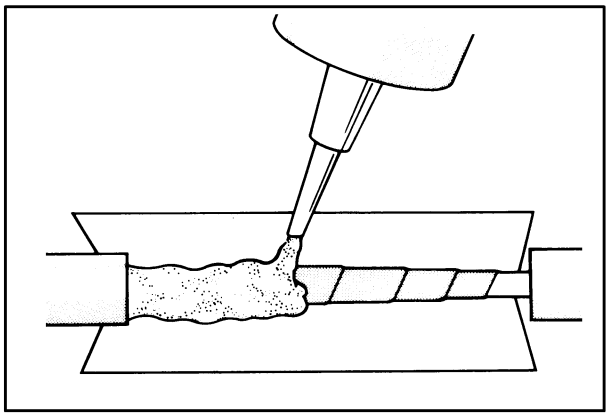

34

5. Wind a layer of vinyl insulation tape up to the grey cable cover at each end of the repair section. Make a paper trough, Figure 34, then apply silicon rubber compound (non hardening sealant) over the repaired section up to the cover ends. Sufficient sealant must be used to fill the ends of the cut away area.

6. Allow the compound to cure then cover the area with insulating tape taking the tape well over each end of the repair. An overlap of at least 2 inches (50 mm) of tape at each end is necessary, Figure 35.

7. Check to ensure the repair is satisfactory and secure the repaired cable so that repeat damage is avoided.

NOTE: *This is a temporary repair only. Ensure the damaged cable is replaced as soon as possible to prevent ingress of water or chemicals.*

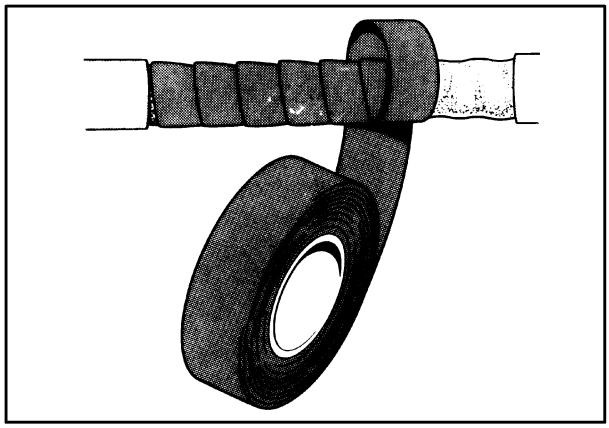

35

ELECTRONIC INSTRUMENT CLUSTER

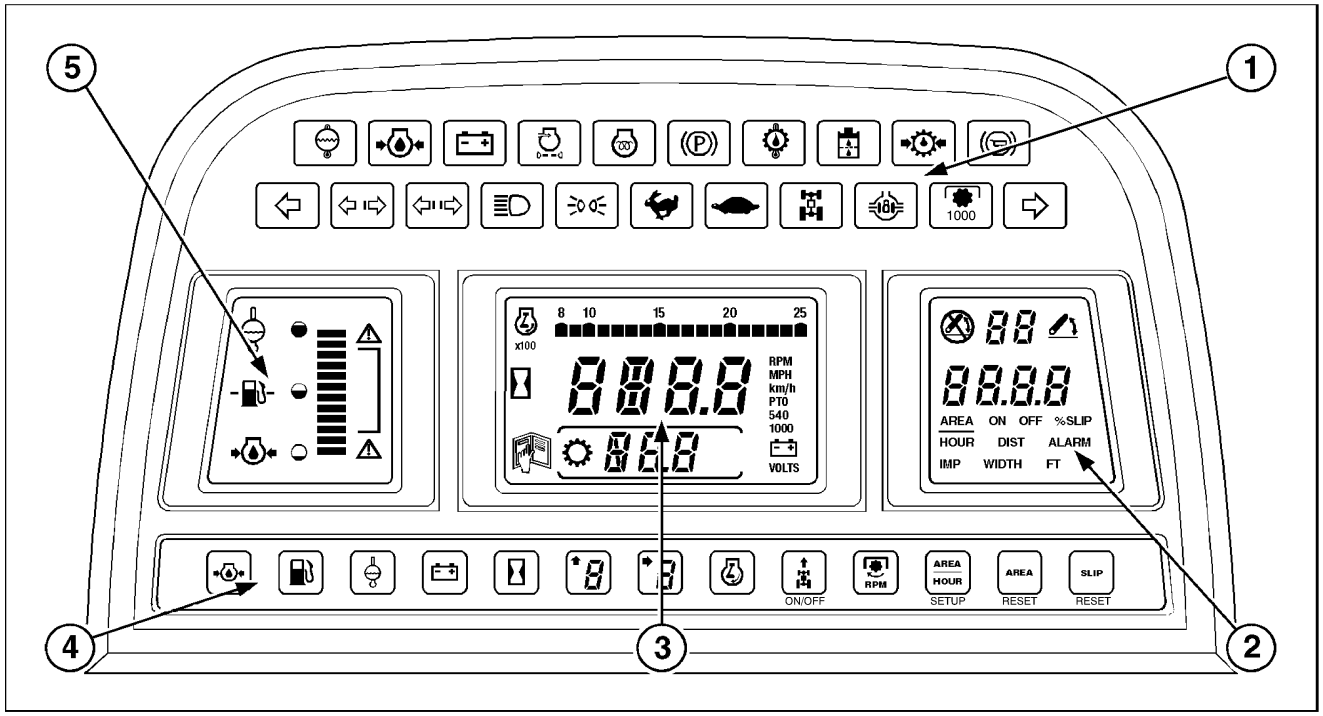

36

The Electronic Instrument Cluster consists of five distinct areas:

1. Indicator and Warning Lamps
2. Tractor Performance Monitor
3. Central Display
4. Function Buttons
5. Tractor Condition Bar Graph

AREA 1: INDICATOR AND WARNING LAMPS

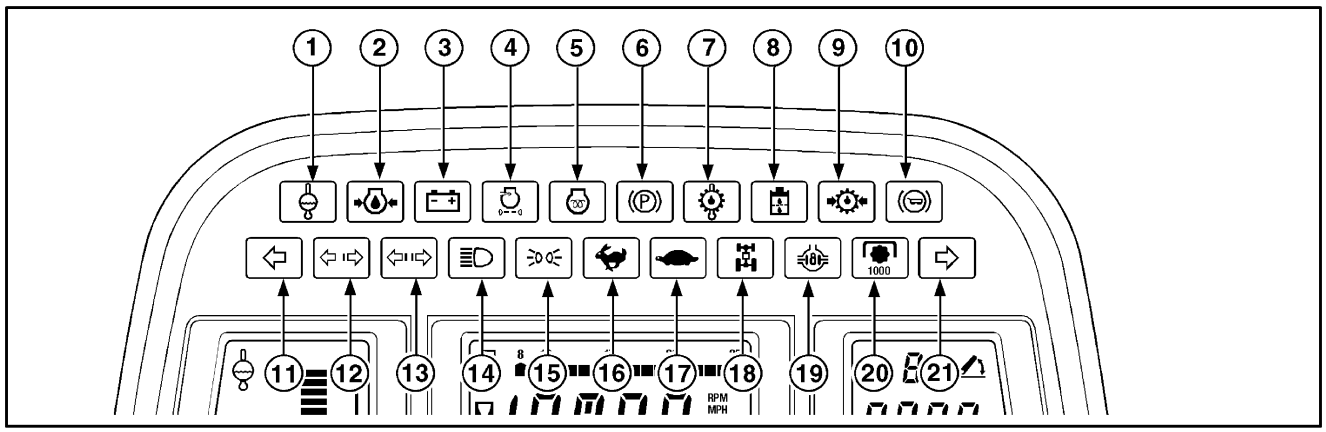

37

	Condition	Indicator/ Warning Lamp	Central Display	Audible Alarm
1	Engine Coolant Temperature High	ON	STOP	CRITICAL
2	Engine oil pressure	ON	STOP	CRITICAL
3	Battery voltage Low	ON		–
4	Air filter restriction	ON		NON CRITICAL
5	Thermostart	ON		–
6	Park brake And Brake/Clutch Fluid Low			
	– Ignition On Park Brake Applied	FLASHING		–
	– Ignition On Brake/Clutch Fluid Low	FLASHING		–
	– Engine Running Tractor Moving Park Brake Applied	FLASHING		CRITICAL
	– Key Off Park Brake Released	FLASHING		CRITICAL 2 min
7	Transmission/Rear Axle. Hydraulic Oil Temperature	ON		CRITICAL
8	**Variable Displacement Pump**			
	– Steering filter Blocked	ON		–
	– Charge Pump Filter Blocked	FLASHING		NON CRITICAL
	Tandem Gear Pump			
	– Steering/Hydraulic Filter Blocked	ON		–
9	Transmission Lubrication Low pressure	ON		CRITICAL
10	Low Trailer Brake Pressure (Italy only)	FLASHING		CRITICAL
11	Left turn indicator	FLASHING		–
12	Trailer One Turning	FLASHING		–
13	Trailer Two Turning	FLASHING		–
14	Headlights Main Beam	ON		–
15	Side Lights	ON		–
16	Direct Drive (Dual Command Transmission Only)	ON		–
17	Underdrive (Dual Command Transmission Only)	ON		–
18	4WD	ON		–
19	Differential Lock	ON		–
20	1000 PTO Speed Selected	ON		–
	1000 PTO Speed Selected and Overspeeing	ON FLASHING 5 sec ON		
21	Right Hand Indicator	FLASHING		–

AREA 2: TRACTOR CONDITION BAR GRAPHS

CRITICAL ALARMS

COOLANT TEMPERATURE HIGH

With engine running:

Critical audible alarm, stop and left hand display will flash.

The tractor performance monitor will also go blank.

With engine off, key on:

The left hand display continues to display maximum bars and coolant symbol.

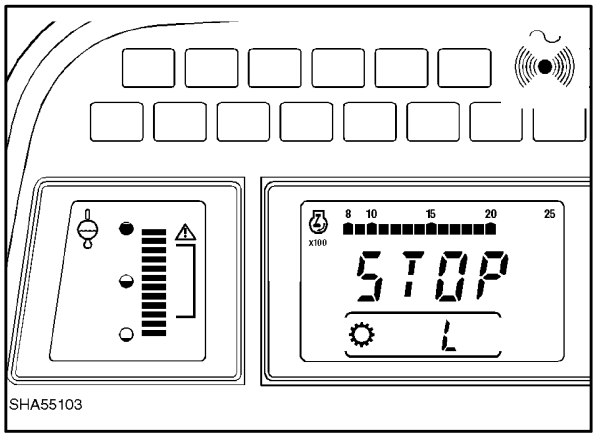

38

ENGINE OIL PRESSURE LOW

With engine running:
Critical audible alarm, stop and left hand display will flash. Alarm pressure function will vary with engine speed.

OIL PRESSURE		RPM	ALARM
Bar	lbf/in2	Less than 500	OFF
0.6	8	500–1500	ON
1.1	16	1500–2000	ON
1.7	24	2000–3000	ON

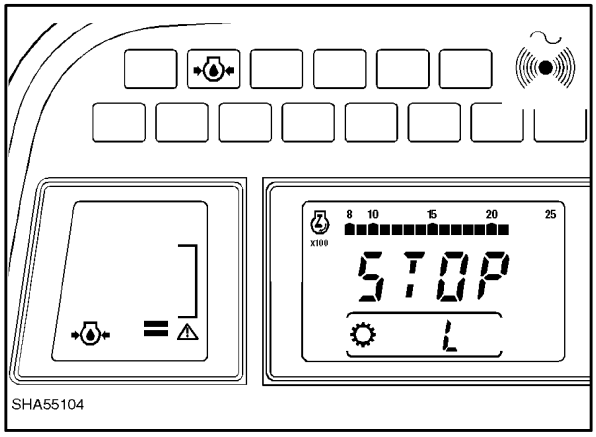

39

The tractor performance monitor will also go blank.

With engine off, key on:
The left hand display continues to display minimum bars and oil pressure symbol.

NOTE: *If both coolant and oil pressure alarms are activated together, both symbols, high and low symbols and all 12 segments of left hand display flash.*

FUEL LEVEL LOW

Display and alarm are activated as bargraph changes from:–

3 to 2 Segments
2 to 1 Segment

Or when Key switched on (with low fuel).

5 second non critical alarm.

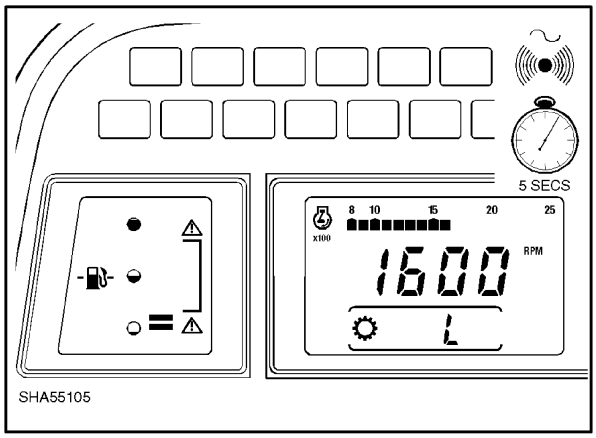

40

AREA 3: CENTRAL DISPLAY

BATTERY VOLTAGE

Digital display indicating to nearest 0.1volt.

Alarm system activated if voltage is less than 10 volts or above 16 volts. The 5 second and 10 second alarm will sound and the battery voltage sign will flash.

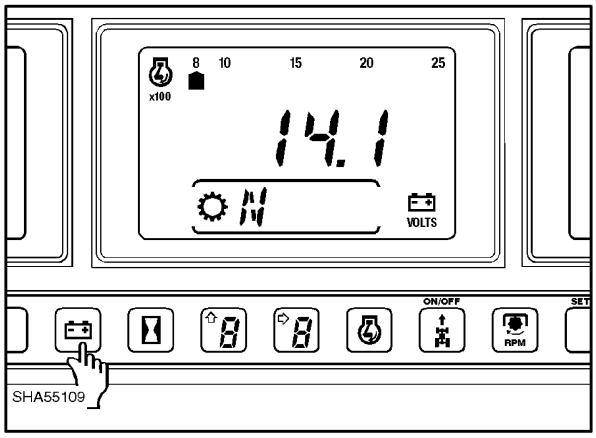

41

ENGINE HOURS

Digital display of actual hours of engine running, automatically selected when Key Start switch turned 'ON'.

Readouts 0–1000 hours in 0.1 increments and above 1000 hours in 1 hour increments to maximum 9999 hours.

Recorded hours are stored in the permanent memory and not affected by battery removal.

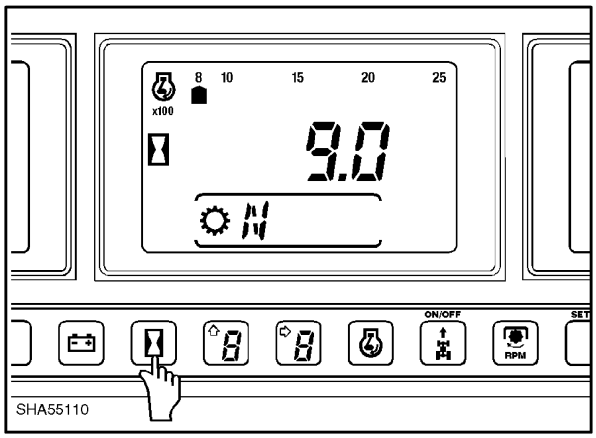

42

ENGINE RPM

Digital display to nearest 10 rpm.

Display automatically selected on engine start up.

Permanent 18 segment rpm bargraph display indicates 800–2500 rpm in 100 rpm steps.

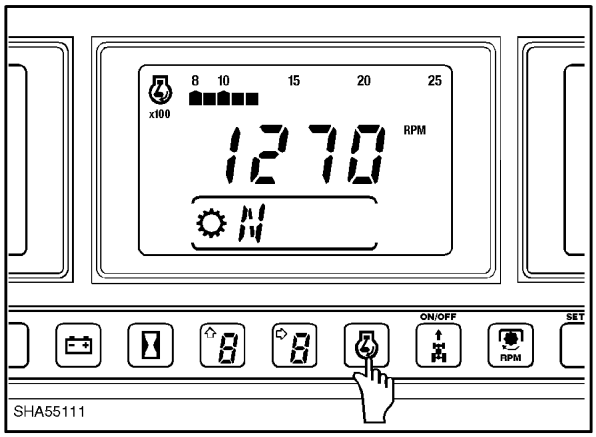

43

GROUND SPEED

Digital display of ground speed km/h or mph (programming). In 'ERPM', display will automatically select ground speed over 20 km/h (12.4 MPH).

Ground speed provided by Radar (if fitted) or transmission speed sensor.

Ground speed calibration must be correct to provide accurate ground speed.

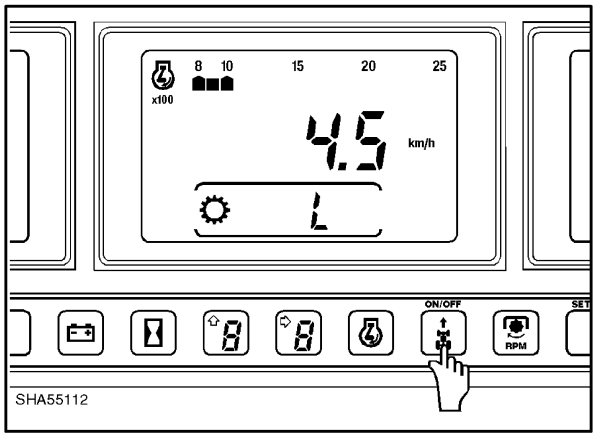

44

GROUND SPEED CALIBRATION SETUP

Ground speed calibration number is related to the rear wheel rolling radius (under load) for tractors less Radar. The calibration number is programmed into the centre display using digit select and set buttons.

For tractors with Radar the calibration number is 4018.

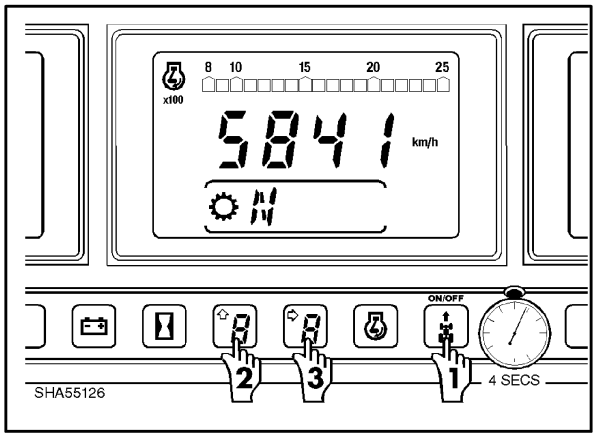

45

Should tyres of a different size be fitted, then the computer module may be recalibrated to display a more accurate ground speed

Using the table select the required calibration number.

Static Loaded Radius		Calibration Number	
mm	in.	12×12 Transmission	16×16 Transmission
622	24.5	9997	7630
635	25.0	9798	7477
648	25.5	9605	7330
660	26.0	9421	7190
673	26.5	2943	7054
686	27.0	9072	6923
699	72.5	8907	6797
711	28.0	8748	6676
724	28.5	8594	6559
737	29.0	8446	6446
749	29.5	8303	6337
762	30.0	8165	6231
775	30.5	8031	6129
787	31.0	7902	6030
800	31.5	7776	5934
813	32.0	7654	5841
826	32.5	7537	5752
838	33.0	7423	5664
851	33.5	7312	5580
864	34.0	7204	5498
876	34.5	7100	5418
889	35.0	6998	5341
902	35.5	6900	5266
914	36.0	6804	5192

ALTERNATIVE CALIBRATION PROCEDURE

Start engine and enter ground speed calibration mode.

Measure suitable 122 m (400 ft) course. Drive over course, touch speed button at start and end of course.

Number displayed is new CALIBRATION number, turn off Key Start switch to enter into memory.

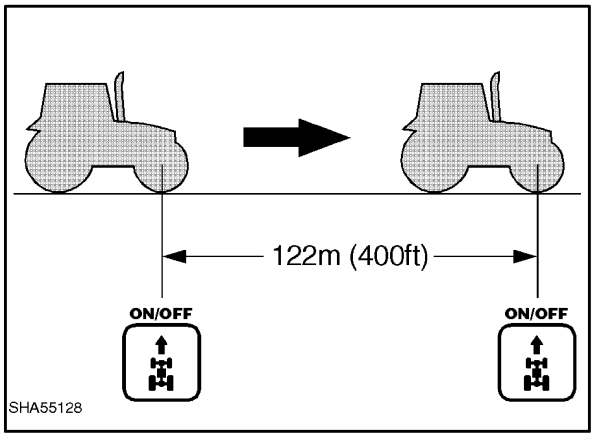

46

SERVICE ALERT SETUP

The next service alert is indicated by the hourmeter symbol flashing for up to 10 hours when the service is due.

The warning can be cancelled by pressing the hourmeter and ground speed function buttons together.

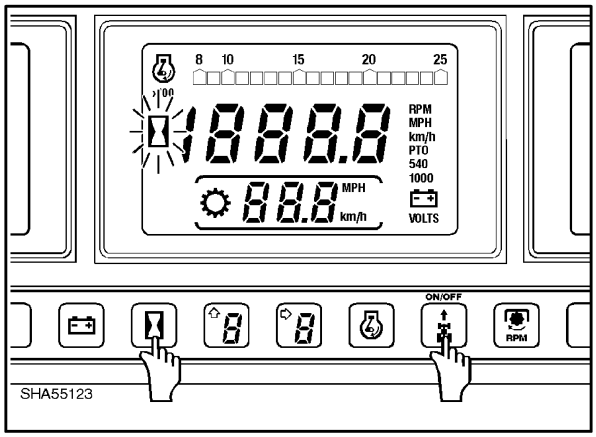

47

To enter the program press and hold the hour function button for 3 seconds, (1) Figure 48.

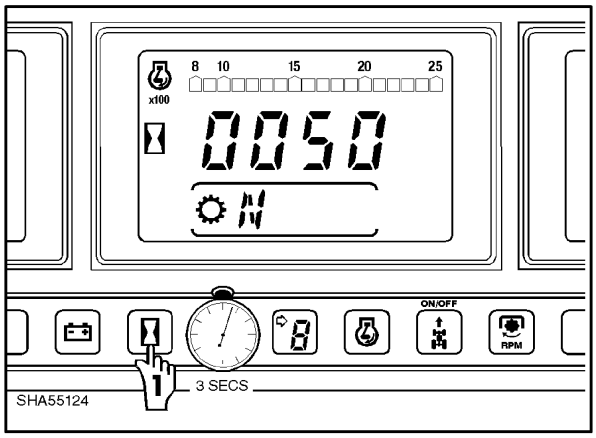

48

To program the next service alert use the digit set (3) and digit select, (2) Figure 49, function buttons.

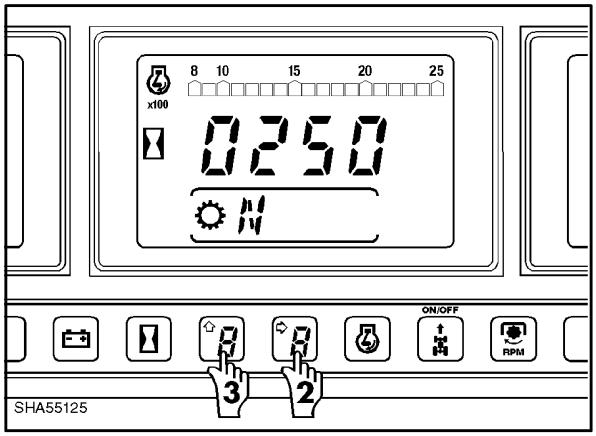

49

Power Take Off Display - non-shiftable P.T.O.

Touch button (3) and the 'PTO 540 legend (1) will display, together with the P.T.O. speed in the main LCD (7). If the 1000 rev/min P.T.O. shaft is in use touch the selector button again and the 'PTO 1000' legend (2) will display together with a digital display of P.T.O. speed.

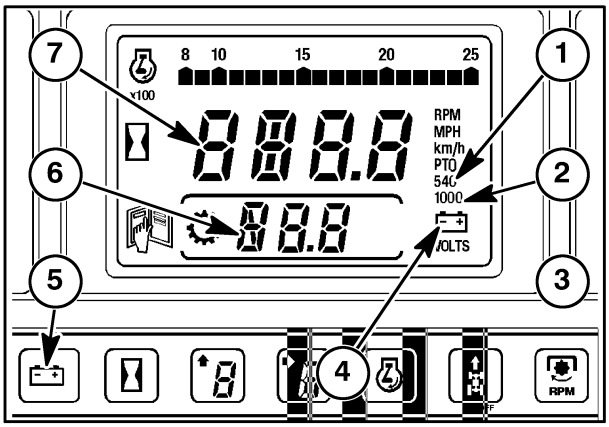

50

Power Take Off Display - shiftable P.T.O.

With shiftable P.T.O. the P.T.O. display, when selected will automatically show the P.T.O. speed set by the position of the P.T.O. speed change lever, even if the P.T.O. knob is in the disengaged position. If 1000 rev/min P.T.O. is selected, the PTO 1000' indicator light will also illuminate.

In both non-shiftable and shiftable P.T.O. the speed is calculated by the EIC using a pre-set constant and engine speed.

Transmission Gear Display - Figure

The lower LCD (6) provides a permanent display of the gear selected, provided the key-start switch is on.

AREA 4: TRACTOR PERFORMANCE MONITOR

AREA PER HOUR

Area per hour being worked based on last 5 seconds of operation.

Display will read .0 if either the implement is raised or the tractor is stopped.

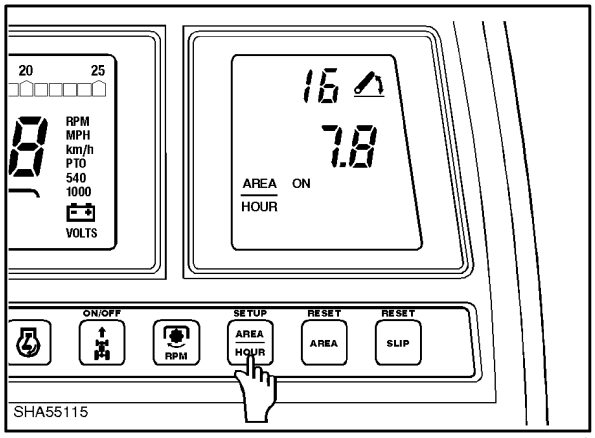

51

AREA

Total accumulated area (since last display reset). Area accumulation is automatically switched 'OFF' or 'ON' when the implement is raised or lowered in work, or manually by touching the ON/OFF (ground speed button).

Area display can be set to ZERO by holding down AREA function button for 3 seconds.

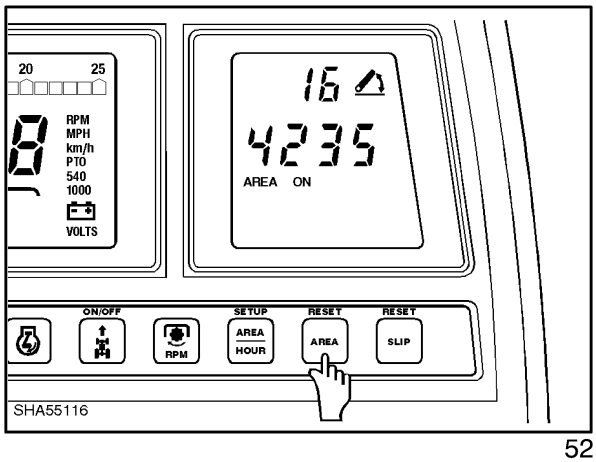

52

SLIP (WITH RADAR OPTION ONLY)

Wheel slip percentage (%).

Based on difference between radar (ground speed) sensor and transmission (wheel speed) sensor signals.

To 'zero' slip, hold down SLIP function button for 3 seconds (alarm tone) while tractor speed is less than 16 km/h (10 mph).

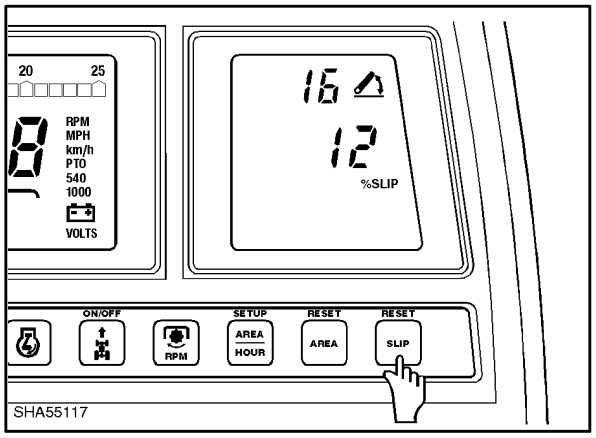

53

TRACTOR PERFORMANCE MONITOR SETUP

1 IMPLEMENT WIDTH

Hold Set Up button to enter programming mode and display implement width.

Use digit select and digit set buttons to revise width setting.

Units:
M = metric ; FT = imperial

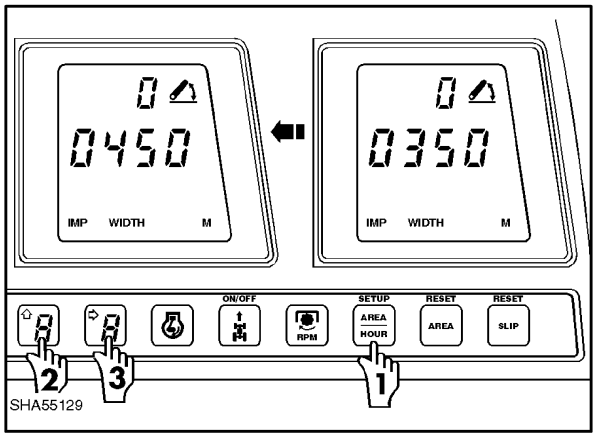

54

2 SLIP ALARM

Touch Set Up button to display slip alarm* setting (where Radar fitted).

Use digit set and select buttons to revise slip alarm setting.

Set display to '0' '0' if alarm not required.

*Units without Radar will show AREA PRESET.

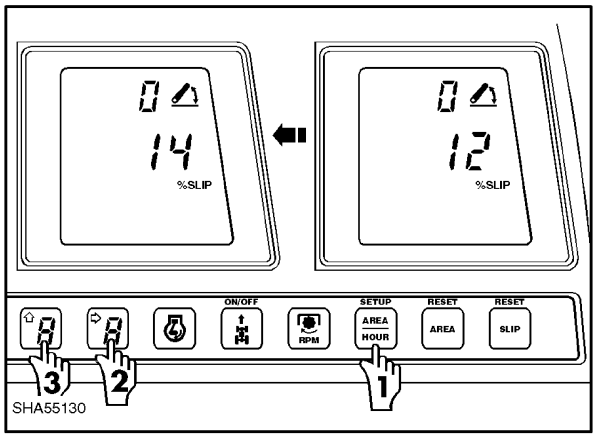

55

3 AREA PRESET

Touch Set Up button to display area accumulation reading.

Use digit select and set buttons to preset area reading.

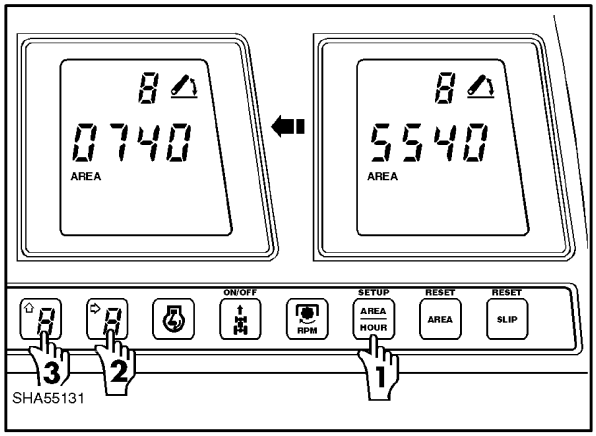

56

TRACTOR PERFORMANCE MONITOR SETUP

4 DISTANCE MEASUREMENT

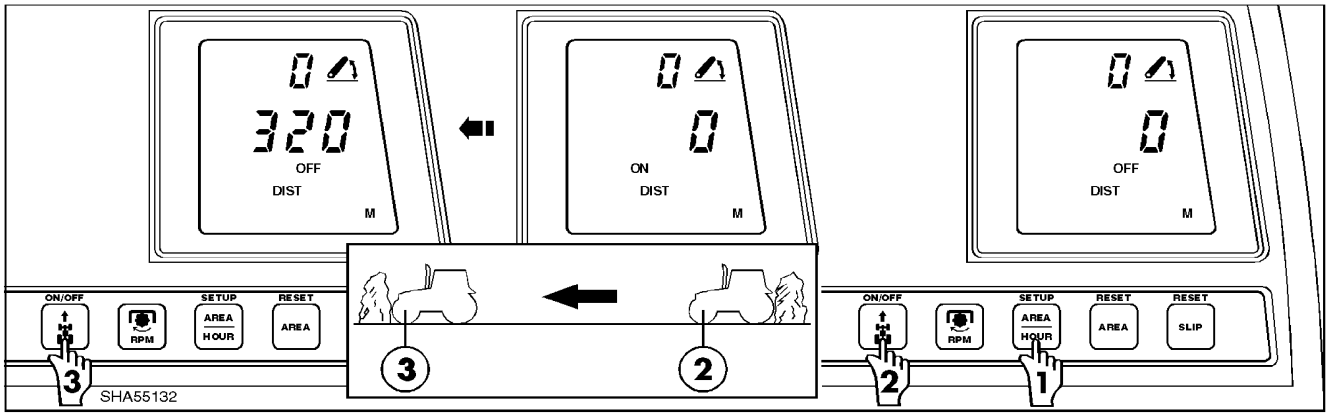

57

Touch Set Up button to enter distance measuring mode.

(M or FT will be displayed indicating metric/imperial units).

To measure travelled distance in this mode use ON/OFF switch to start and stop display.

5 SETTING METRIC OR IMPERIAL UNITS

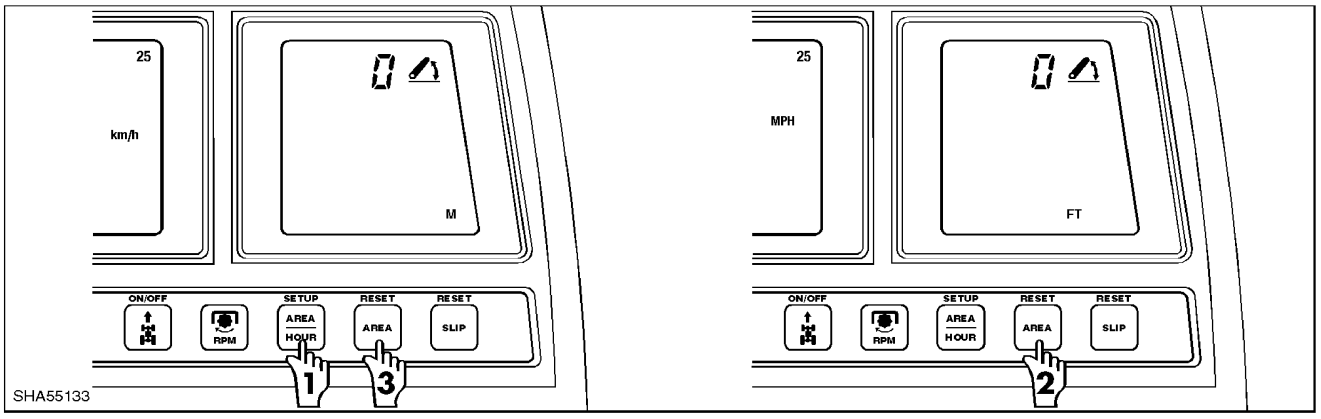

58

Touch Set Up button to display units 'M' or 'FT'.

Touching either reset button will change the units displayed.

To exit programming mode hold down Set Up button until the display changes to AREA/HOUR display.

Hitch Enabled Sumbol (with Electronic Draft Control only)

The hitch enabled symbol (1) is displayed to advise the operator when the 3-point linkage is in phase with the hydraulic lift control lever. See 'ELECTRONIC DRAFT CONTROL'.

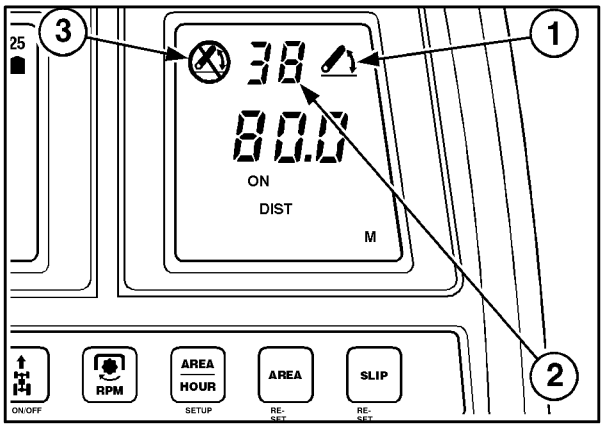

59

Hitch Position Display (with Electronic Draft Control only)

The display (2) advises the operator of the position of the lower links (and implement) by means of numbers ranging from '0' (fully lowered position) to '99' (maximum lift height). See 'ELECTRONIC DRAFT CONTROL.

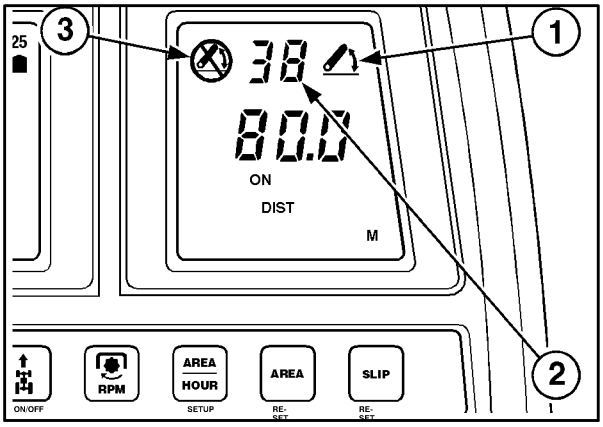

60

Hitch Disabled Symbol (with Electronic Draft Control only)

The hitch disabled symbol (3) is displayed when the 3-point linkage is out of phase with the hydraulic lift control lever. See 'ELECTRONIC DRAFT CONTROL.

AREA 5: FUNCTION KEYS

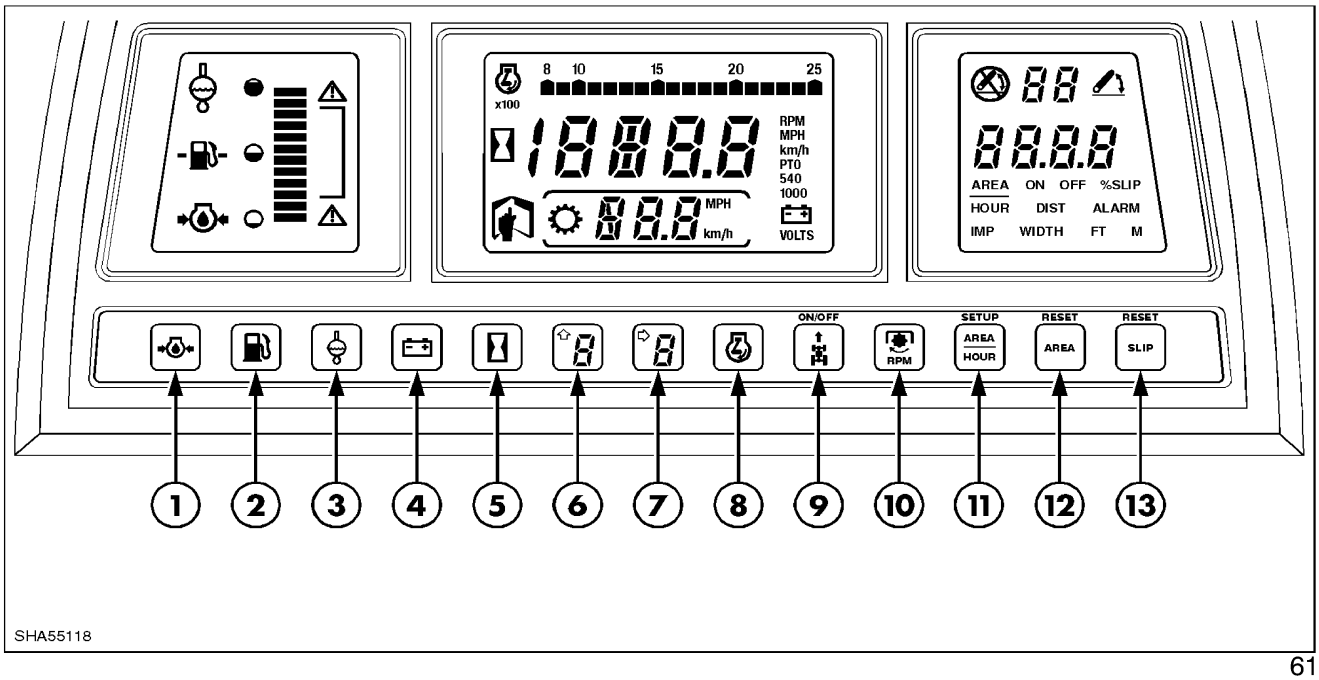

61

1 Engine Oil Pressure
2 Fuel Tank Level
3 Engine Coolant Temperature
4 Battery Voltage
5 Engine Hours
6&7 Programming & Diagnostic Functions
8 Engine RPM Digital Readout
9 Ground Speed
10 PTO RPM 540/1000
11 Area/Hour
12 Area Worked
13 Slip %

The liquid crystal displays are selected by touching the appropriate touch sensitive function buttons as shown above.

An audible bleep confirms each function button command.

The selected displays are shown on the previous pages.

The function buttons are disabled during critical and non-critical alarm sequences.

EIC SERVICEABILITY

Removing Electronic Instrument Cluster

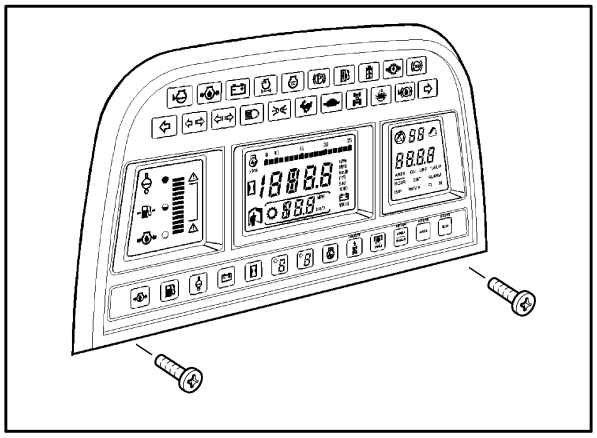

62

Rear Cover removed

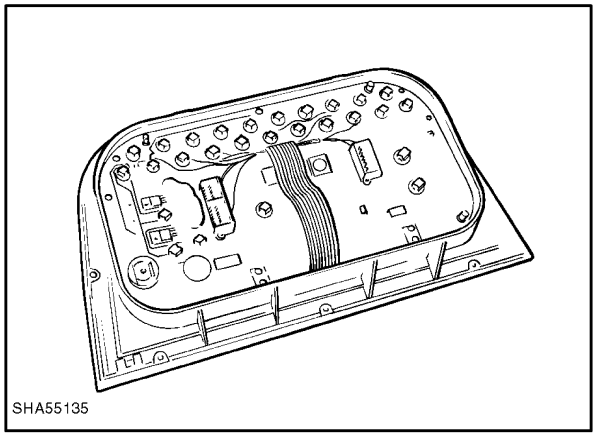

63

Bulb replacement

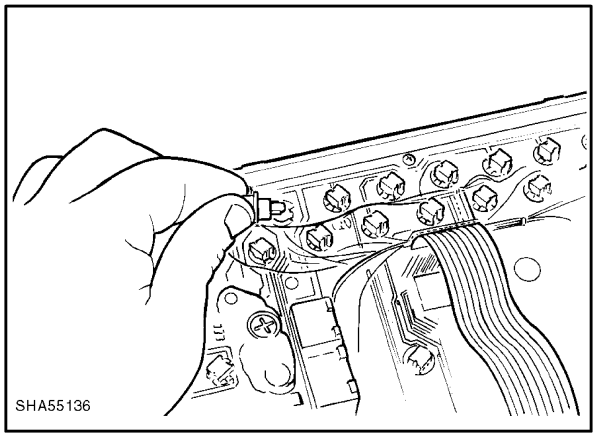

64

FAULT CODE CHART

ERROR CODES

The Electronic Instrument Cluster (EIC) features an integral fault diagnosis system which displays error codes on the LCD as shown in the following Table.

These error codes appear when any one of the listed errors occurs. The alarm sounds continuously for a critical alarm and for 5 seconds with a non critical alarm.

SENSOR CONDITION	EIC DISPLAY		ALARM
	Less than 500 rev/min Error Code No.	More than 500 rev/min	
Oil Sender Short to Ground/Open Circuit	1	STOP	Critical
Oil Sender Short to a +ve Voltage	2	STOP	Critical
Fuel Sender Short to Earth/Ground	3	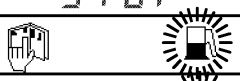	Non Critical
Fuel Sender Open Circuit or Short to a +ve Voltage	4	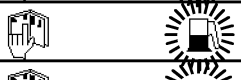	Non Critical
Axle Start Sender Short to Earth/Ground	5	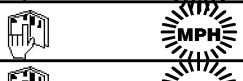	Non Critical
Axle Start Sender Open Circuit or Short to a +ve Voltage	6	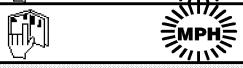	Non Critical
Coolant Temperature Sender Short to Earth/Ground	7	STOP	Non Critical
Electronic Draft Control error Serial Link Failure	8		
Transmission error Serial Link Failure	9		
Battery Calibration error	10		
Slip Alarm, Slip constant, Width and Service Hours check	11	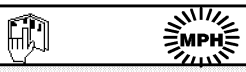	Non Critical
Coolant Temperature Sender open circuit or shorted to a +ve Voltage	12	STOP	Critical
Engine Shutdown error	13		

☐ **Non EIC Errors – only displayed in the Diagnostic Memory.**

Read Your Manual (RYM)

ERROR CODE 1 - Engine Oil Pressure Sender Short or Open Circuit

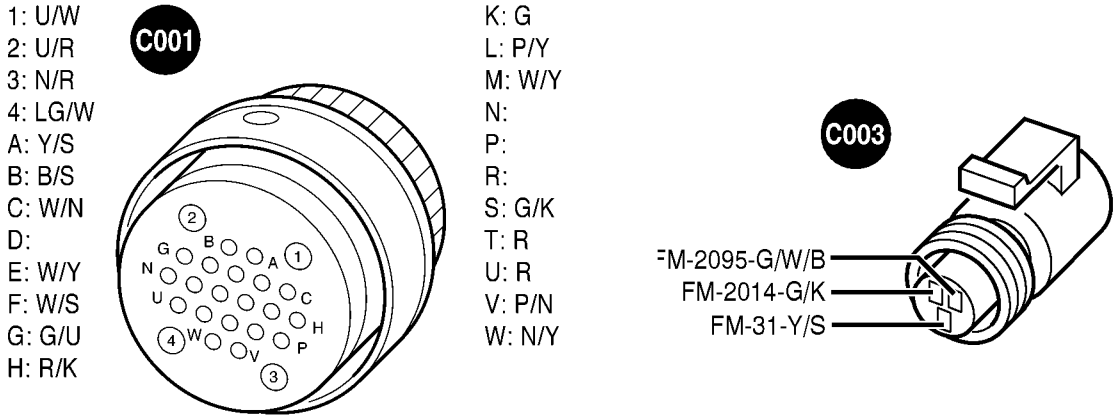

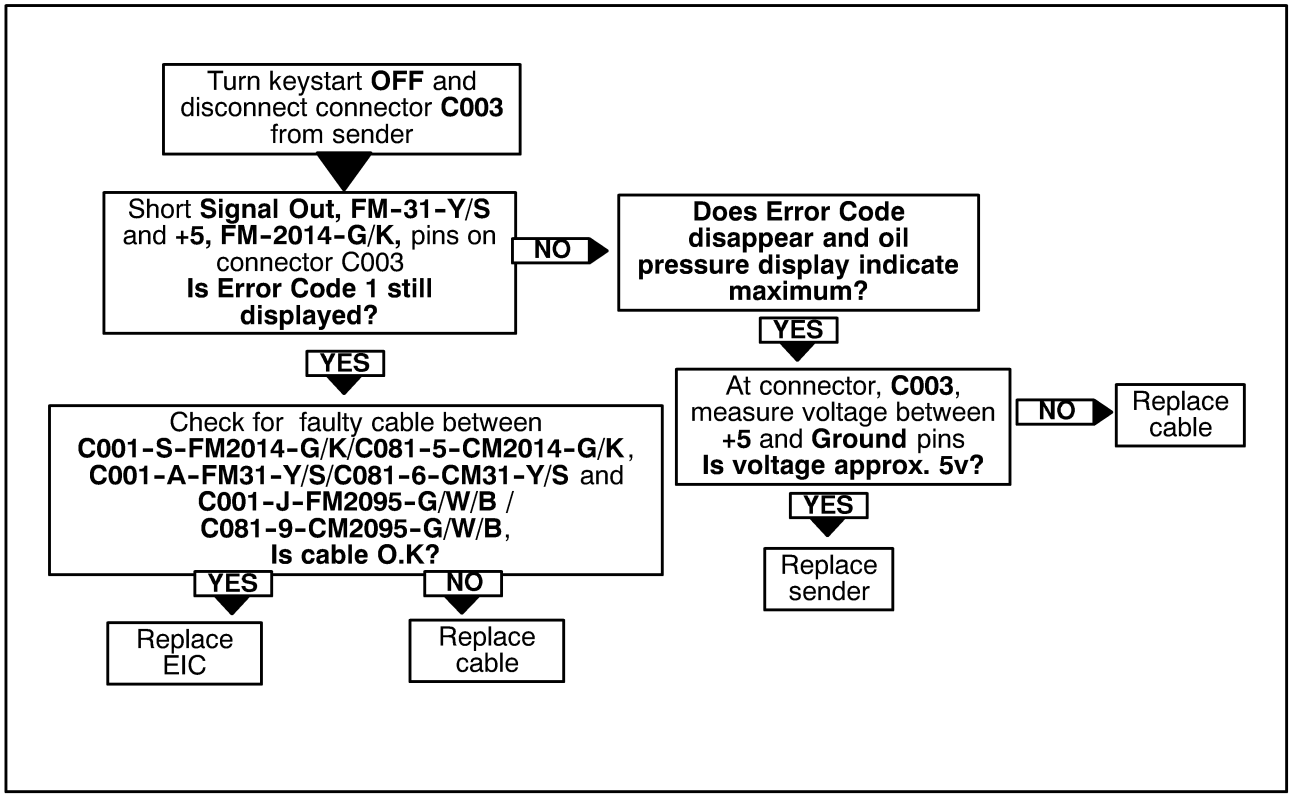

ERROR CODE 2 - Engine Oil Pressure Sender Short to +ve Voltage

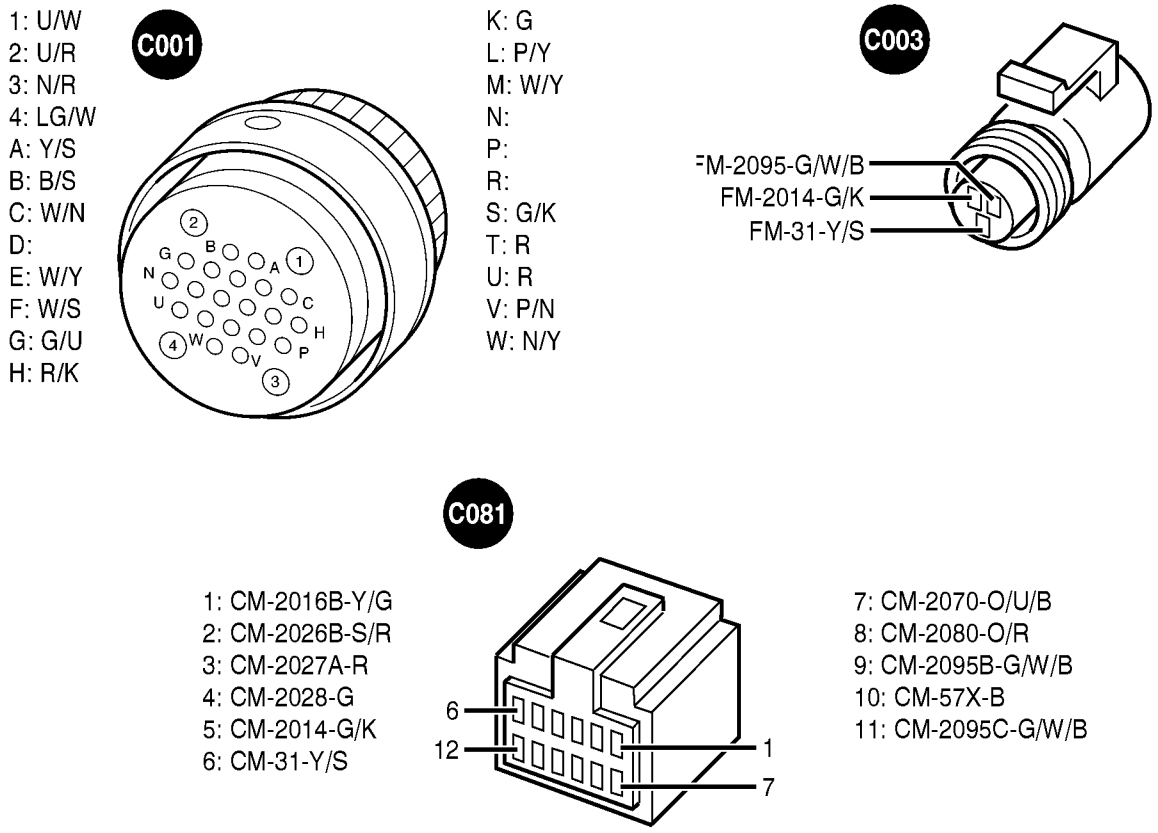

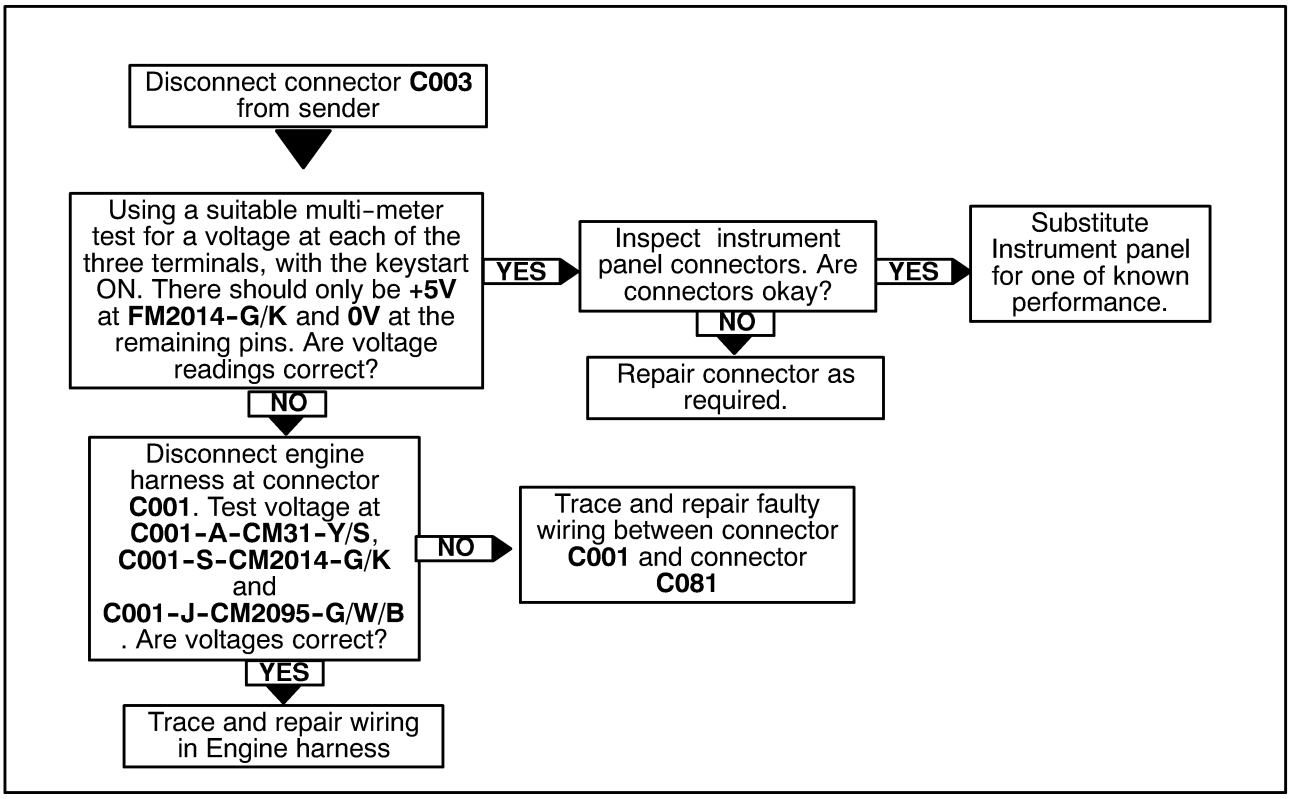

ERROR CODE 3 – Fuel Tank Level Sender Short to Earth/Ground
ERROR CODE 4 – Fuel Tank Level Sender Open Circuit or Short to +12V

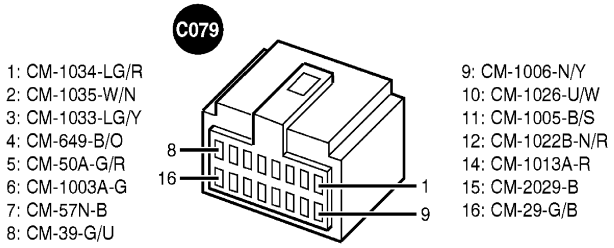

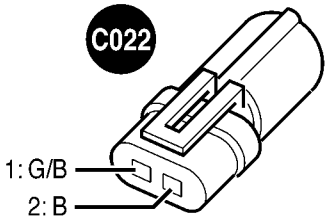

Inspect level sender, are the connectors on the terminals clean and tight?
NO → Repair/replace and recheck
YES

Disconnect wires from sender unit and connector **C079** from the instrument panel. With a suitable multi-meter, check **C022-RM2095-G/W/B** to ground. Is resistance **<10Ω** ?
NO → Locate and repair open circuit in sender ground wire
YES

Check the terminals of the sender to ground. Is a short to ground indicated on either terminal?
YES → Remove sender, repair/replace and ensure there is no short to ground on reassembly
NO

Check the operation of the sender. Is the resistance within the range: Full 30Ω and Empty 250Ω ?
NO → Renew sender
YES

Check **C022-RM29-G/B** to ground. Is a short to ground indicated?
YES → Trace and repair fault in wiring
NO

Check between **C022-RM29-G/B** and **C079-16**. Is resistance **<10Ω** ?
NO → Trace and repair open circuit fault in wiring
YES

Inspect instrument panel connectors. Are connectors okay?
YES → Substitute instrument panel for one of known performance and recheck.
NO

Repair connector as required.

ERROR CODE 5 – Axle Speed Sender Short Circuit
ERROR CODE 6 – Axle Speed Sender Open Circuit

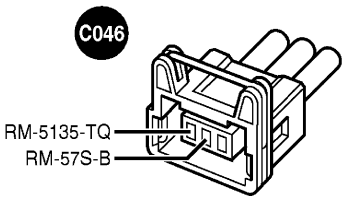

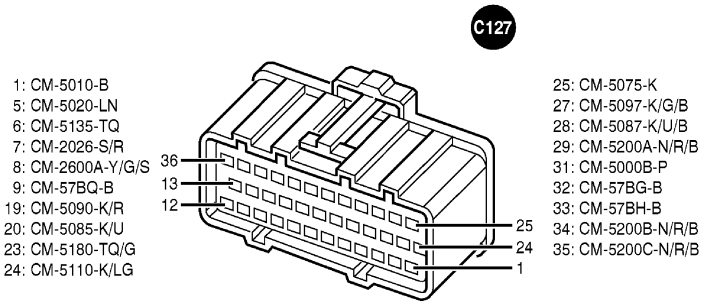

Disconnect EDC and transmission processor connector **C127** and wheel speed connector **C046**. Test wiring between **C127-6** and **C046-RM5135-TQ**. Is a short or open circuit indicated?

YES → Trace and repair/replace fault in wiring

NO → Reconnect the two connectors carefully. Check that they are correctly fitted and recheck. Is error code 5 or 6 still displayed?

YES → With the sender installed check for a short circuit to ground on each sender terminal or for an open circuit of the sender. Replace sender if either condition is indicated.

ERROR CODE 7 – Coolant Temperature Sender Short Circuit

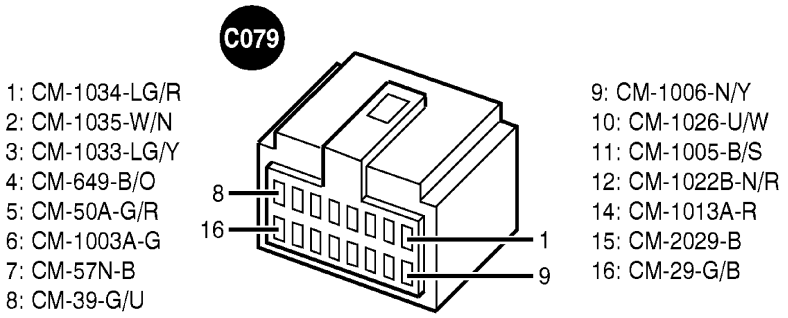

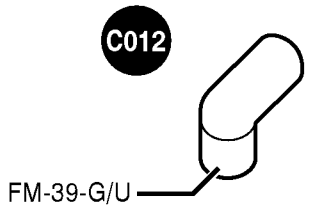

Remove the connector, **C012,** from the sender. Ensure the end of the wire is not contacting any metallic part. Turn keystart ON, engine OFF
Is Error Code 7 displayed?

NO → Renew sender and recheck function.

YES ↓

Remove the instrument panel, disconnect plug **C079**. Disconnect the signal wire from the sender. Measure the resistance between pins **C079-8-CM39-G/U** and **C079-7-CM57N-B**
Is the resistance less than 5000Ω?

YES → Locate and repair short circuit in signal wire

NO ↓

Replace instrument cluster with one of known performance

ERROR CODES 8 and 9 Communications Error

The Electronic Draft Control module and the electronic transmission control (processor) send their disply information over a two wire serial communications connection.

Communications errors (8&9) occur when the message received by the instrument panel is not correct. This can be caused by an intermittent connection on the signal wires (LN/O orLN/TQ). If these errors are accompanied by reports of intermittent or blank displays in the transmission or hitch position areas, then the circuit wires should be investigated for open circuits, short circuits and intermittent connections.

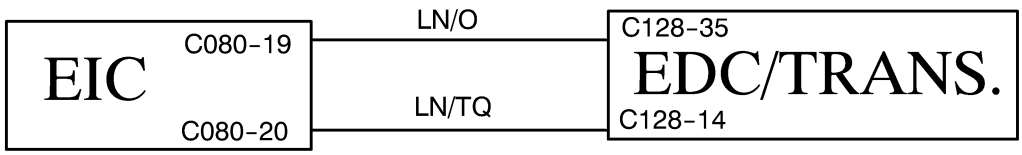

ERROR CODE 10 - Memory Retention Error of Battery Calibration Constant

Compare the voltage display of instrument panel to a voltmeter reading at the battery. If the readings differ by more than 2.0 volts, then replace instrument panel and recheck.

ERROR CODE 11 - Memory Retention Error of Operator Setting for Slip Alarm, Slip Zero Reference Constant, Implement Width and Service Hours

If Error Code 11 persists then replace the instrument panel.

Re-programme the constants listed above using the instructions detailed earlier in this Section. Turn keystart OFF and re-check the programmed values. If the values are not correct then replace the instrument panel

ERROR CODE 12 – Coolant Temperature Sender Short Circuit

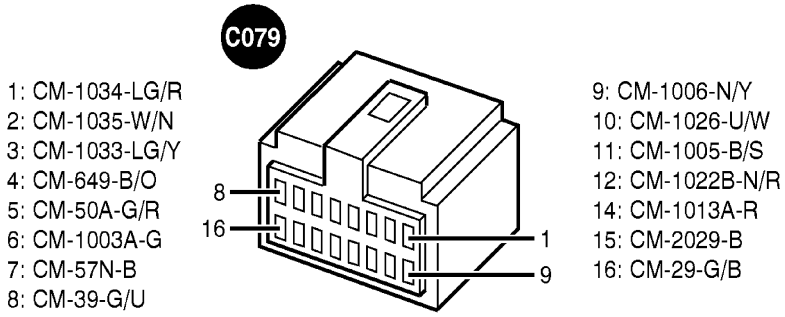

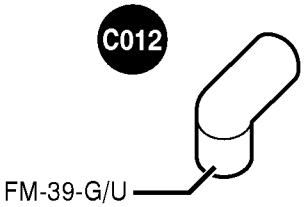

Inspect the connection at connector **C012** at the sender.
Are the terminal and connector clean and do they fit together firmly?

NO → Rectify poor connection and recheck function

YES

Remove the connector **C012** from the sender and hold it firmly against a good ground
Does the display indicate Code 7?

YES → With the connector removed from the sender measure the resistance between the sender terminal and body
Is the resistance between 80Ω (hot) and 800Ω (cold) ?

YES → Sender has poor ground to engine. Remove sender and clean threads

NO → Renew sender and recheck function.

NO

Remove the instrument panel, disconnect connector **C079**. At the sender ,earth the signal wire and measure the resistance between **C079-8-CM39-G/U** and **C079-7-CM57N-B**
Is the resistance less than 10Ω?

YES

Clean the connector pins with contact cleaner spray Apply a dielectric grease. Reconnect plugs to the instrument cluster and turn keystart switch on
Does the cluster function correctly?

NO → Install a new Instrument Panel and recheck function.

NO → Find and repair an open circuit fault in wiring between connectors **C079-8** (instrument panel) and connector **C012** (sender)

ERROR CODE 13 - Engine Shut-Down Output Short to a + Voltage

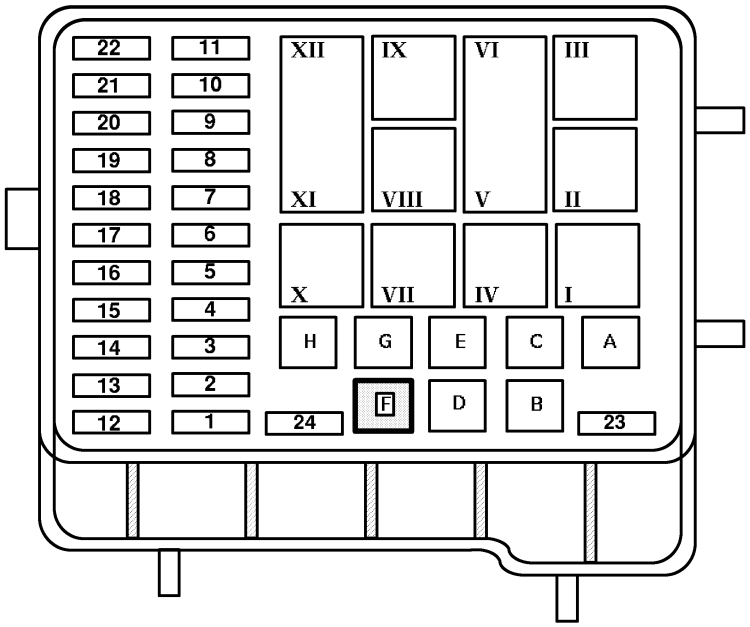

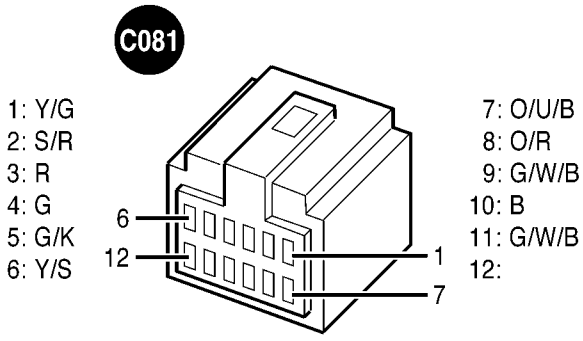

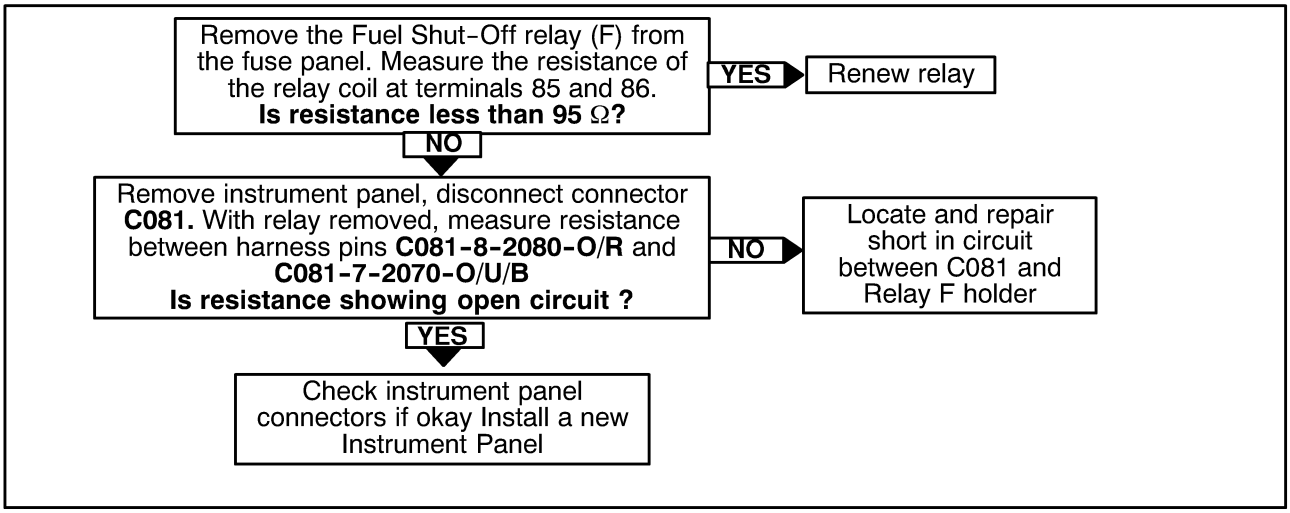

Common Test Procedure for ALL of the Switch Circuits Connecting to Ground

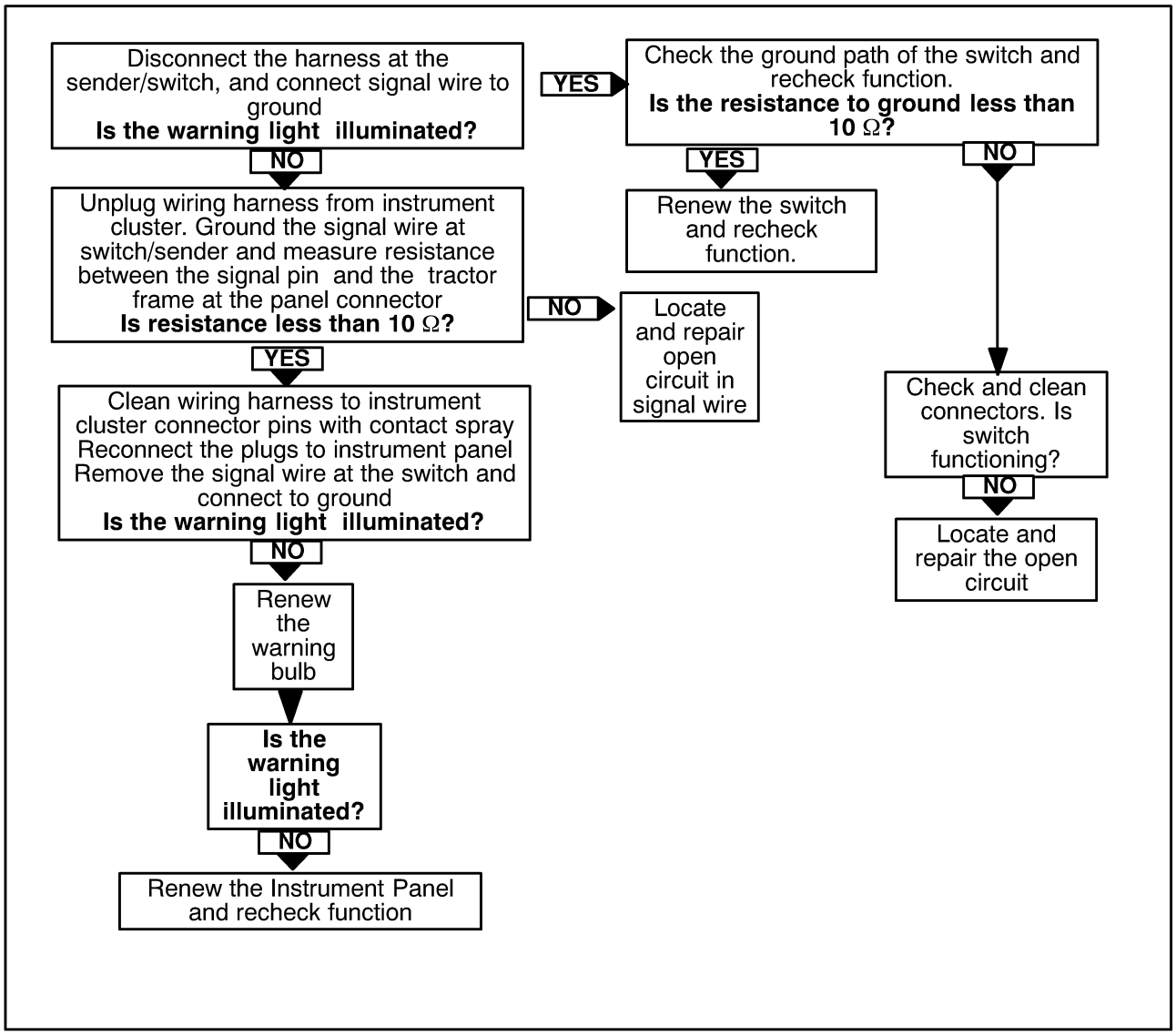

Instrument Cluster Inoperative

No display on instrument cluster when the keystart switch is turned on.

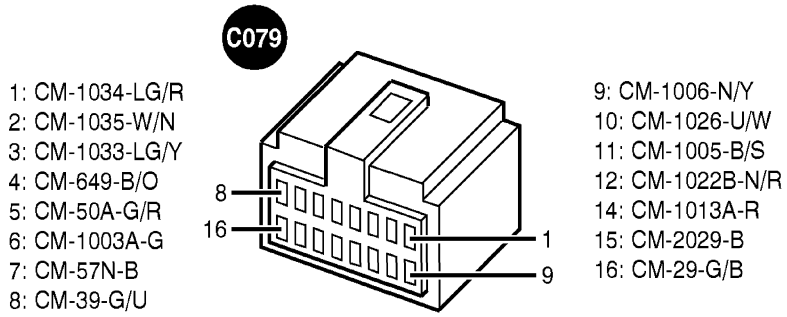

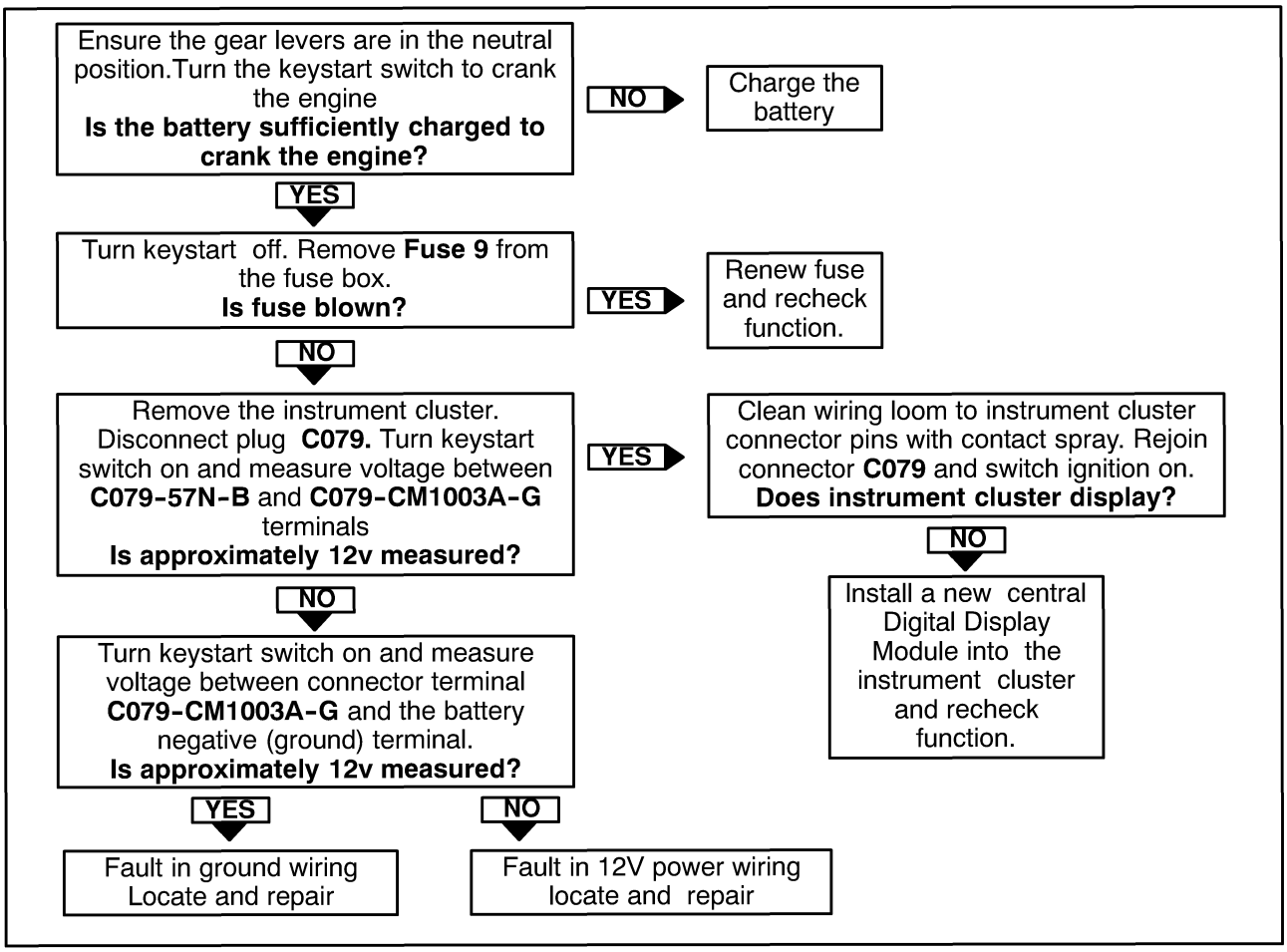

DIAGNOSTIC MEMORY

To enter diagnostic memory mode hold down digit set button during key 'ON' and self test sequence.

Touching the digit set button will cycle the display through the memory.

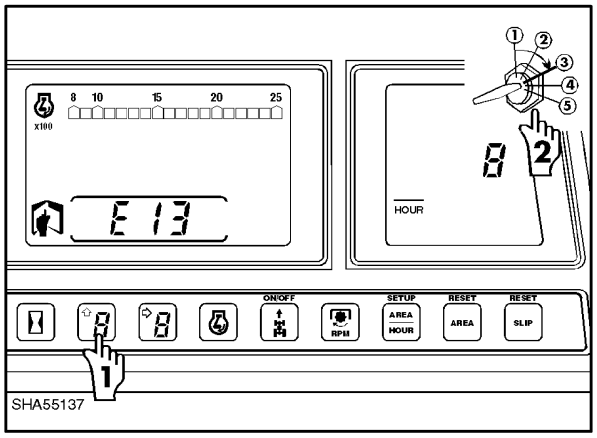

65

The error codes will appear on the appropriate display, together with engine hours recorded. Typical examples are illustrated.

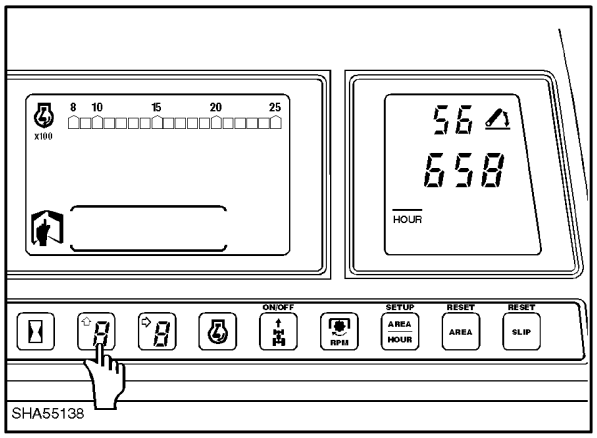

66

The memory can be erased by holding down the digit set button for 10 seconds (while in diagnostic memory mode).

To exit mode touch any other display and function button.

The cluster stores up to 10 diagnostic error codes in a permanent memory. The stored 'Services History' can be displayed by entering the Diagnostic Memory Mode.

When in this mode, touching the digit set button will cycle the display through the stored memory.

When 10 error codes are already stored, further error codes occurring will cancel the oldest error code in the memory or update the hours if that code is already stored.

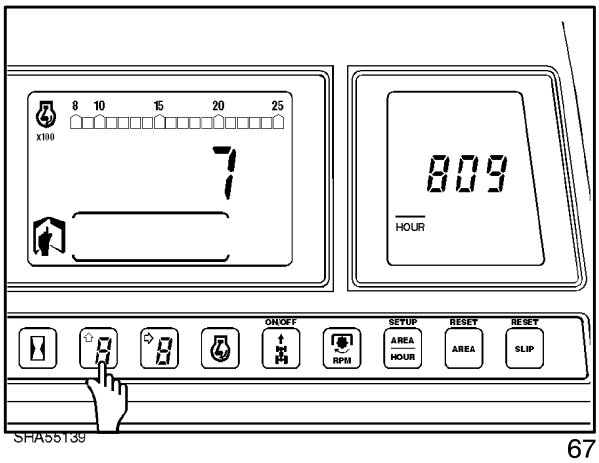

67

INSTRUMENT PANEL BYTE LEVELS

To set bytes, press and hold the battery function button and turn key to ON (Engine off). The display will show

'0' '7'
'7' = Byte number
'0' or '1' = Function

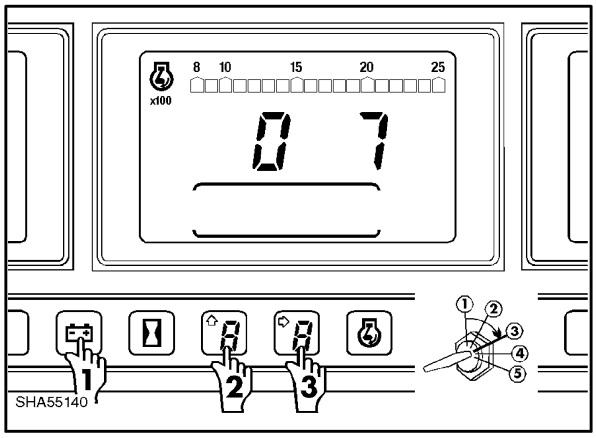

68

Use the DIGIT SELECT function switch to select next Byte (15 – 0).

Use the DIGIT SET function switch to select function of Byte ('0' or '1').

BYTE No.

7, 6	EDC Gain – Both should be switched to '0'.
5, 4	Reserved – No effect whether switched to '0' or '1'.
3, 2	Bar Graph Displays – Both should be switched to '1'.
1	Units : Imperial '1' : Metric '0'.
0	Panel Type – should be switched to '1'.
15, 14, 13, 12, 11, 10	Reserved – No effect whether switched to '0' or '1'.
9	Radar Normally switched to '0' If switched to '1' the Tractor Performance Monitor display will be blank when radar not fitted.
8	PTO Switched to '0'.

Engine Speed Constant – depress Engine Speed function switch.
Constant = 017.1

ANALOGUE ELECTRONIC INSTRUMENT CLUSTER

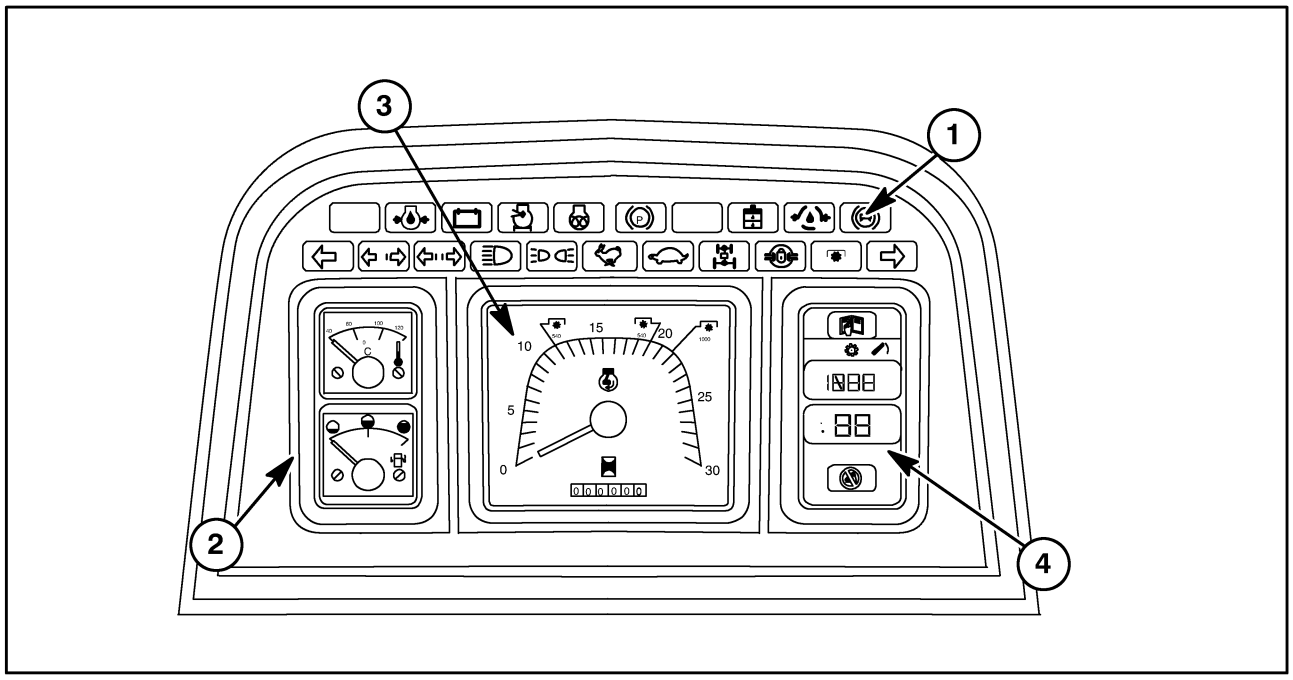

69

The Analogue Electronic Instrument Cluster consists of four distinct areas:

1. Indicator and Warning Lamps
2. Tractor Condition Gauges
3. Main Tachometer
4. LCD Displays

AREA 1: INDICATOR AND WARNING LAMPS

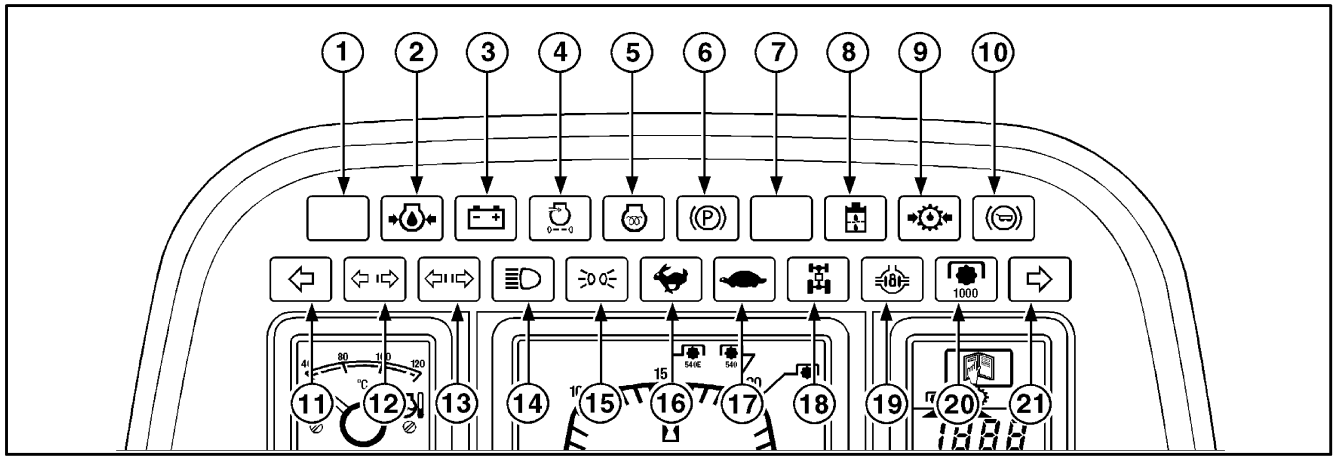

70

	Condition	Indicator/Warning Lamp	Audible Alarm
1	Not Used	–	–
2	Engine Oil Pressure	ON	–
3	Battery Voltage Charge Low	ON	–
4	Air Filler Restriction	ON	–
5	Thermostart	ON	–
6	**Park Brake + Clutch/Brake Fluid level**		
	– Key On Park Brake ON	FLASHING	–
	– Low Brake/Clutch Fluid level	FLASHING	–
	– Key Off Park Brake OFF	–	CRITICAL 2 min
7	Not Used	–	
8	**Variable Displacement Pump**		
	– Steering Filter Blocked	ON	–
	– Charge Pump Filter Blocked	FLASHING	–
	Tandem Gear Pump		
	– Steering/Hydraulic Filter Blocked	ON	–
9	Transmission Lubrication Low Pressure	ON	–
10	Low Trailer Brake Pressure (Italy Only)	FLASHING	CRITICAL
11	Left Turn Indicator	FLASHING	–
12	Trailer One Turning	FLASHING	–
13	Trailer Two Turning	FLASHING	–
14	Headlights Main Beam	ON	–
15	Side Light	ON	–
16	Direct Drive (Dual Command Tractors Only	ON	–
17	Indirect Drive (Dual Command Tractors Only	ON	–
18	4WD	ON	–
19	Differential Lock	ON	–
20	1000 PTO Speed Selected	ON	–
	1000 PTO Speed Selected And Over Speeding	FLASHING 5 sec ON	–
21	Right Turn Indicator	FLASHING	–

AREA 2: TRACTOR CONDITION GAUGES

The Analogue panel has two gauges:

Coolant Temperature

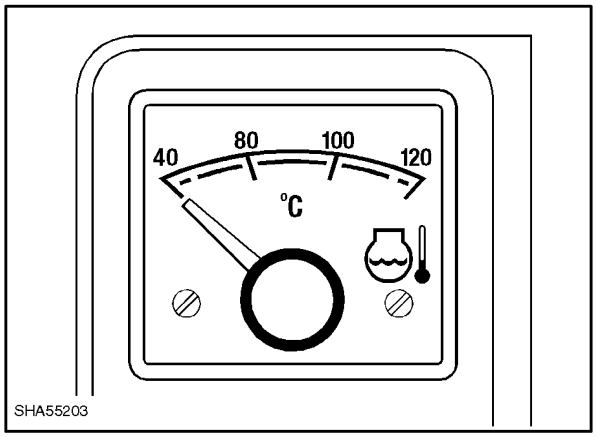

71

Fuel Level

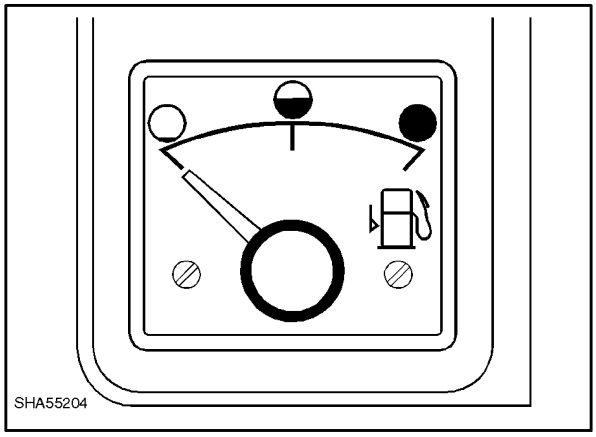

72

AREA 3 : MAIN TACHOMETER

The central display is the tachometer showing engine speed and the correct engine speeds for 540/1000 PTO operation, as well as economy 540.

Also in this area is the proof meter for engine hours.

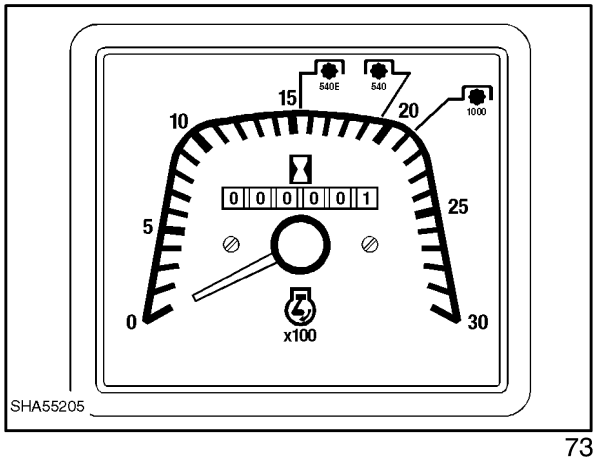

73

AREA 4 : LCD DISPLAYS

Area 4 is the liquid crystal display, which is split into the upper and lower sections.

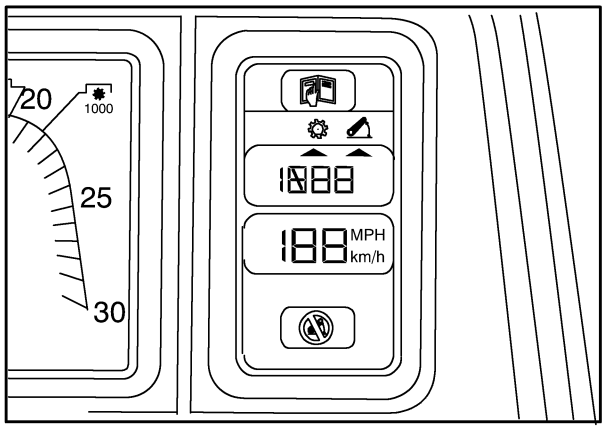

74

Upper Digital Display

Unit with Electronic Draft Control (EDC), the 3-point linkage position is indicated '0' (Fully lowered position) to '99' (Maximum lift height)

Unit with a 16 × 16 transmission without EDC, the transmission ratio will appear.

Error codes also appear in the upper display when retrieved.

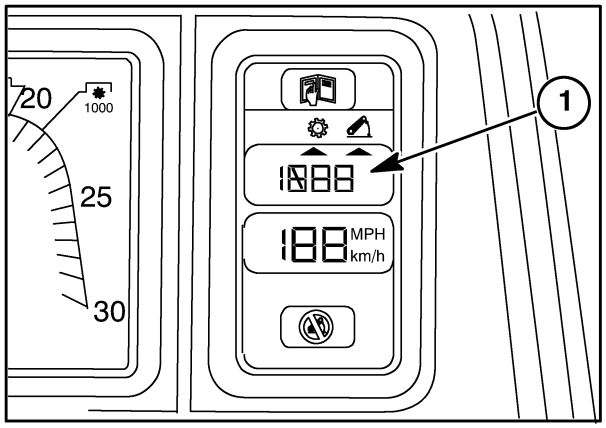

75

Lower Digital Display

The lower LED provides a permanent display of ground speed (in MPH or Km/h) which can be changed depending on market.

The hitch disabled warning light illuminates when the 3-point linkage position is out of phase with the hydraulic lift lever.

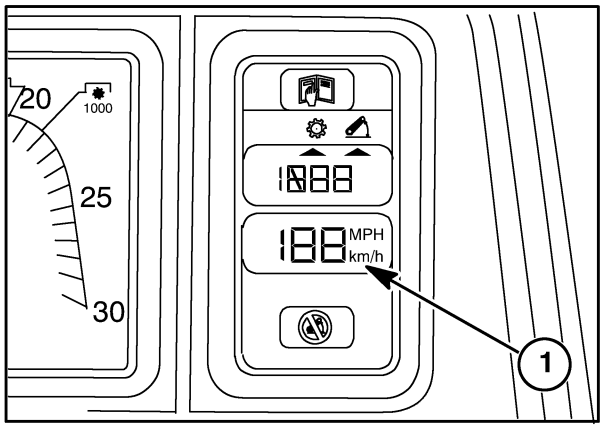

76

Road Speed Calibration

Mark out a distance of 122 m (400 feet) on a dry, firm, level and straight piece of ground.

- Press and hold the shuttle 'dump' button (3). Start the engine.

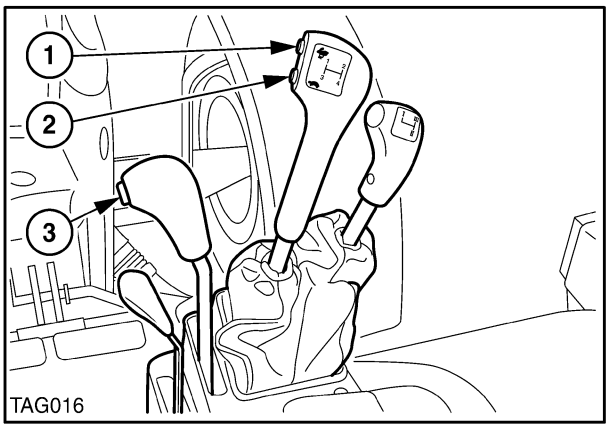

77

- Release the button.

- The current radius of the rear tyres in millimetres will be displayed.

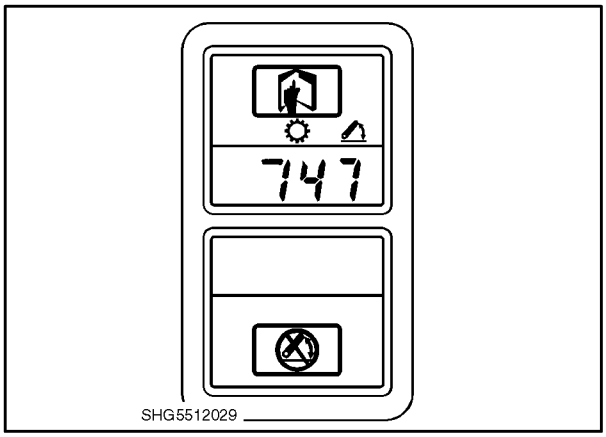

78

- Select a transmission ratio as follows:
  24 × 24 transmission - gear 2, range 3
  16 × 16 transmission - high range 1-4 gear

- As the centre of the front tyres passers over the mark press and release the upshift button. The display will change to Run.

- As the centre of the front tyres passes over the finish line, press and release the downshift button. The new rear tyre radius will appear in the display.

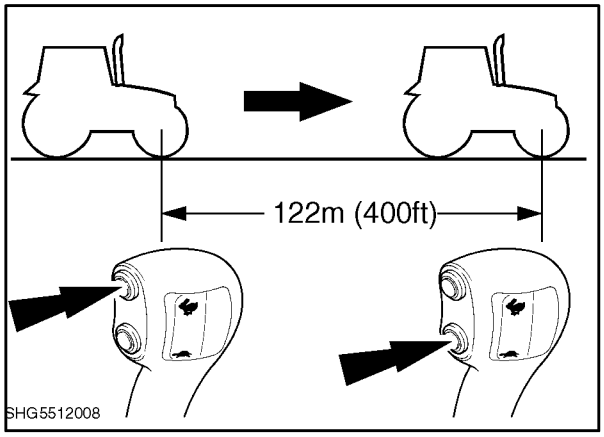

79

- To enter the new calibration No. turn off the key-start switch.

Alternative Calibration Procedure

Using the H6 Menu Mode via the diagnostic lead will allow the actual radius of the wheel in millimetres to be selected

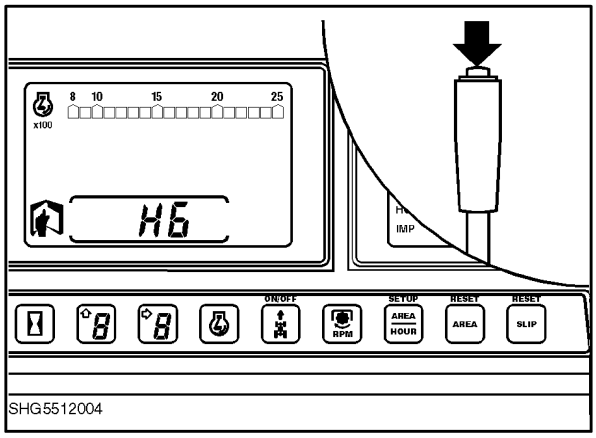

80

Install the diagnostic lead and select H6.

The current radius will be displayed in millimetres.

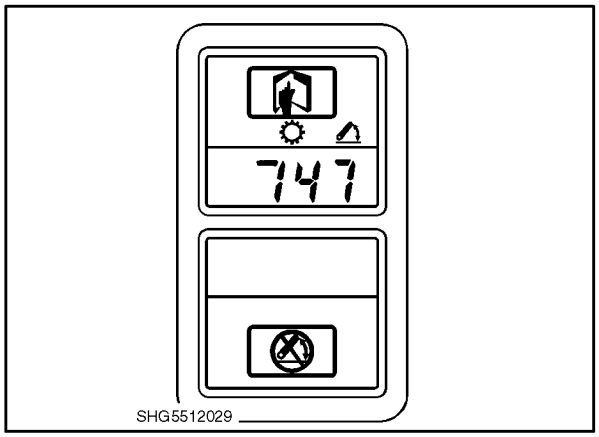

81

By depressing the transmission upshift button a larger radius may be selected

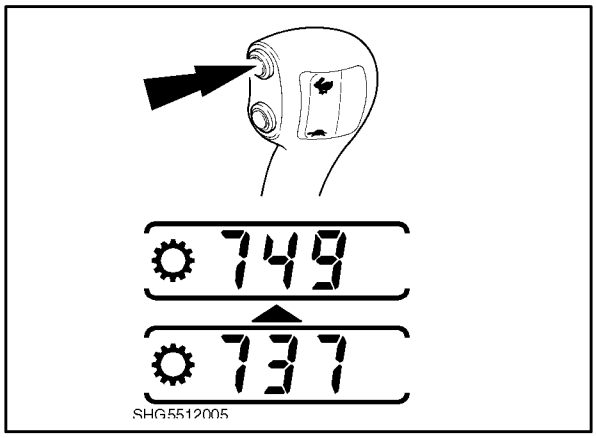

82

By depressing the transmission downshift button a smaller radius may be selected.

Use the buttons to select the value closest to the actual radius.

Key off and disconnect the diagnostic lead. This will store the settings in the memory.

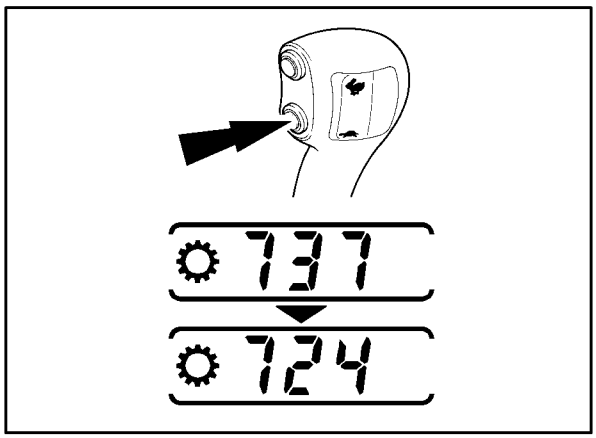

83

SERVICEABILITY

Instrument Cluster removed.

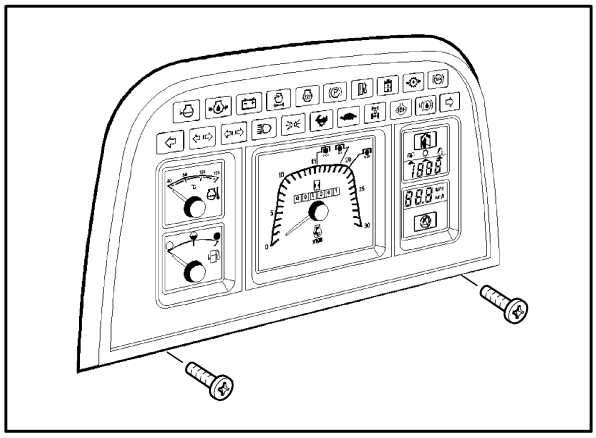

84

Rear cover removed.

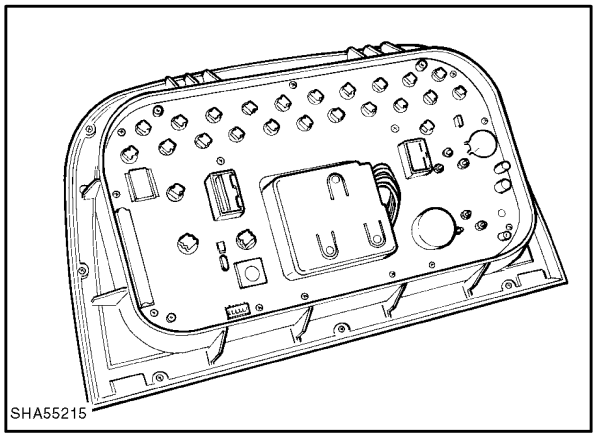

85

Bulb replacement.

As well as the bulbs, the gauges and liquid crystal displays can also be replaced separately.

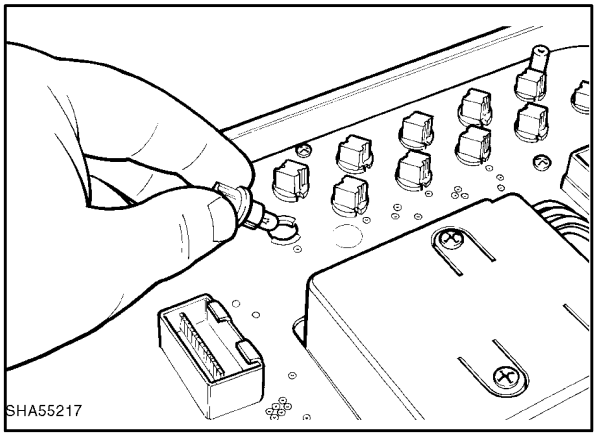

87

ANALOGUE INSTRUMENT CLUSTER

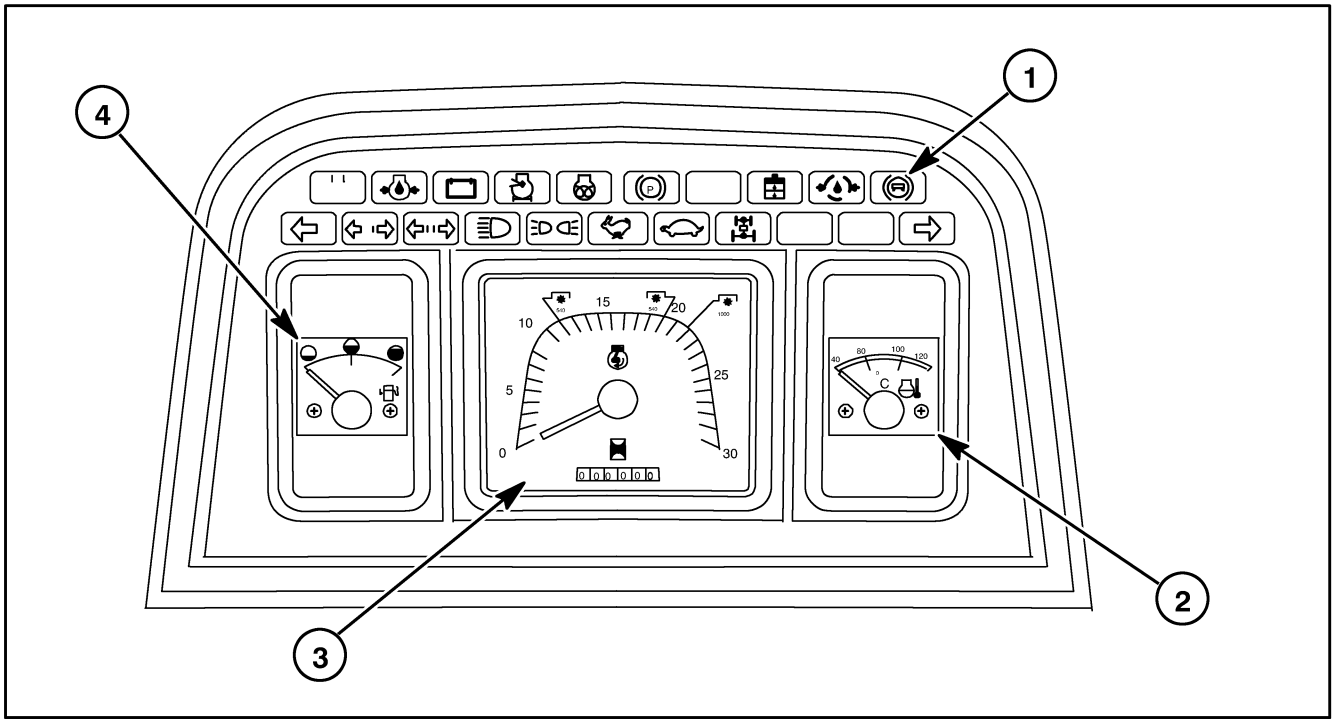

88

The Analogue Instrument Cluster has four display areas:

1. Indicator and Warning Lamps
2. Fuel Level
3. Main Tachometer Display
4. Engine Temperature

AREA 1: INDICATOR AND WARNING LAMPS

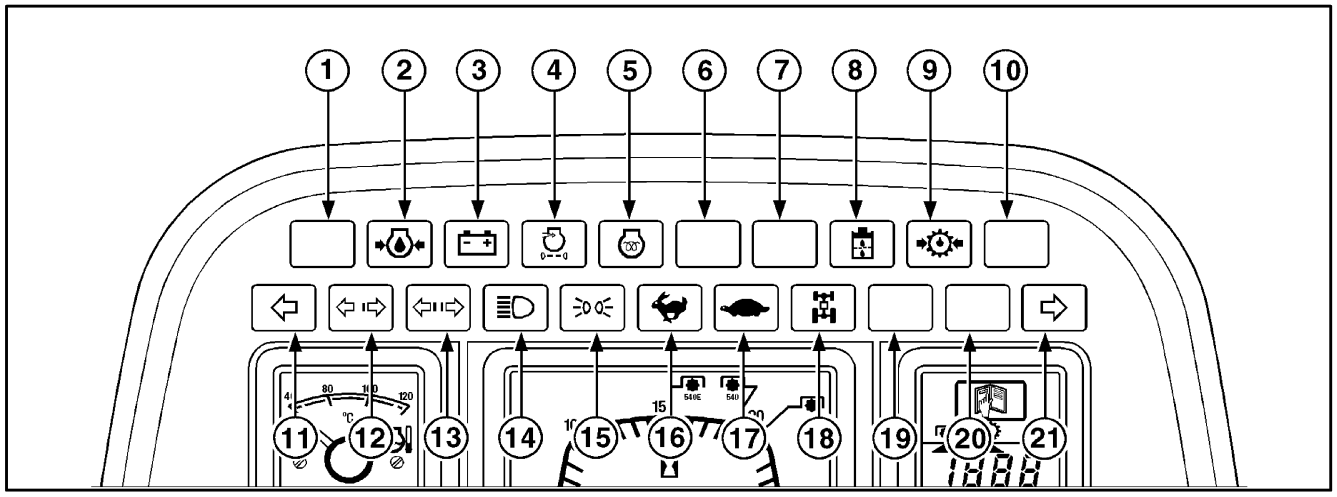

89

	Condition	Indicator/ Warning Lamp	Audible Alarm
1	Not Used	-	-
2	Engine Oil Pressure	ON	-
3	Battery Voltage Charge Low	ON	-
4	Air Filter Restriction	ON	-
5	Thermostart	ON	-
6	**Park Brake and Clutch/Brake Fluid Level**		
	- Key on Park Brake ON	FLASHING	-
	- Low Brake/Clutch Fluid Level	FLASHING	-
	- Key off Park Brake OFF	-	CRITICAL 2 min
7	Not Used	-	-
8	**Variable Displacement Pump**		
	- Steering Filter Blocked	ON	-
	- Charge Pump Filter Blocked	FLASHING	-
	Tandem Rear Pump		
	- Steering/Hydraulic Filter Blocked	ON	-
9	Transmission lubrication low pressure	ON	-
10	Low Trailer Brake Pressure (Italy only)	FLASHING	CRITICAL
11	Left Turn Indicator	FLASHING	-
12	Trailer one turning	FLASHING	-
13	Trailer two turning	FLASHING	-
14	Headlights main beam	ON	-
15	Side Light	ON	-
16	Direct Drive (Dual command transmission only)	ON	-
17	Underdrive (Dual command transmission only)	ON	-
18	4WD	ON	-
19	Differential Lock	ON	-
20	1000 PTO Speed Selected	ON	-
	1000 PTO Speed Selected and Over Speeding	ON-FLASHING 5 secs ON	-
21	Right Turn Indicator	FLASHING	-

Fuel Level

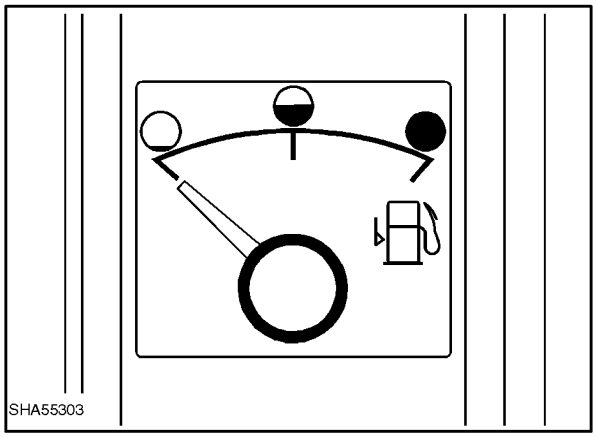

90

Tachometer

Displays engine speed and indicates correct speeds for 540/1000 PTO operation.

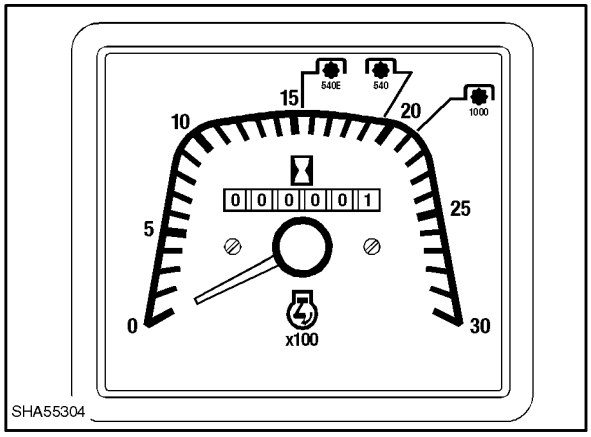

91

Coolant Temperature

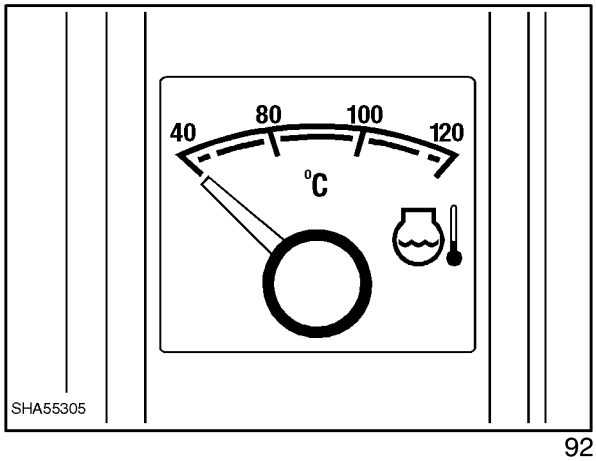

92

SERVICABILITY

Removing Analogue Instrument Cluster.

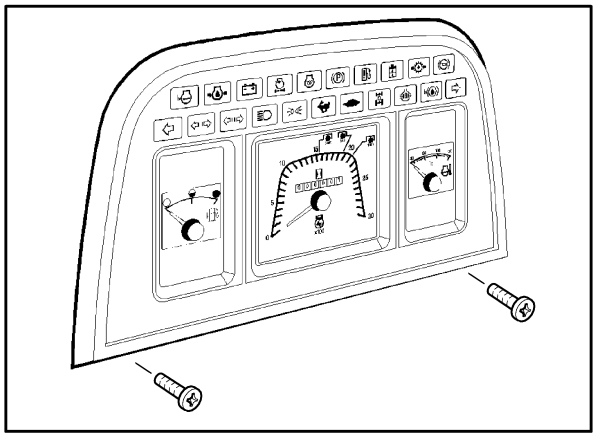

93

Rear cover removed.

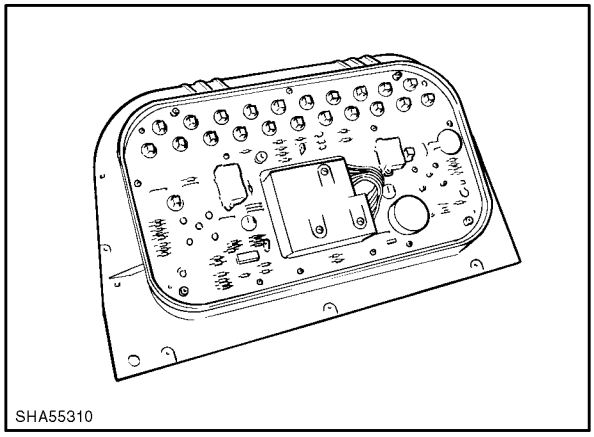

94

Bulb replacement.

As well as the bulbs, the gauges can also be replaced seperately.

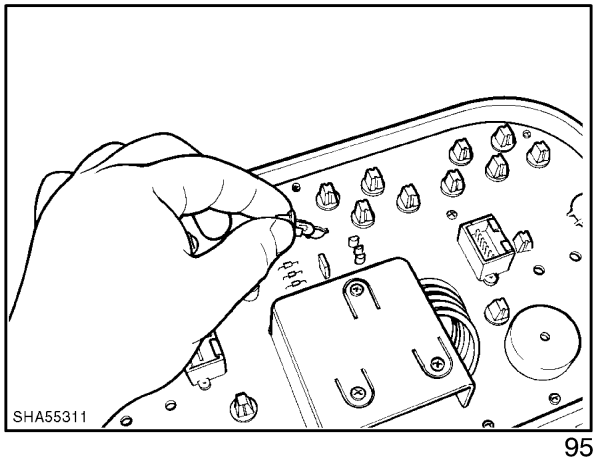

95

STARTING SYSTEM

SPECIFICATIONS

	Starter Type Bosch 3.1 Kw
Maximum No Load Current Draw at 12.0 volts and 8000 rev/min.	80 amps
Minimum Brush Length	7.00 mm (0.28 in)
Minimum Commutator Diameter	42.5 mm
Maximum Armature Shaft End Play	0.4 mm (0.015 in)

TORQUE SPECIFICATIONS

	lbf.ft	Nm
Starting motor to Engine Block Retaining Bolts	25	34
Solenoid Cable nuts	5	7
Starting Motor End Housing Nuts	7	10
Solenoid Retaining Bolts	4	5

OPERATION

The type of starting system is dependant on the transmission installed in the tractor. All systems consist of a key start switch, heavy duty wiring, starter motor and solenoid assembly, and a starting relay, these are the components of the basic circuit which is used on the mechanical transmission.

The 3.1 Kw rated motor is a four pole four brush type starter with integral solenoid and positive engagement drive assembly.

The integral solenoid incorporates two windings connected in parallel. One winding is the low resistance 'pull-in' coil, grounded through the motor, while the other is the high resistance 'hold-in' coil grounded via the solenoid body.

When the key start switch is closed with the transmission in neutral the solenoid coils are energised and the solenoid plunger is magnetically attracted into the solenoid core. This movement, transmitted through a pivoted linkage mechanism forces the drive pinion into mesh with the flywheel ring gear. At ring gear to pinion abutment, the solenoid plunger closes a set of contacts to give a direct feed from the battery to all four field coils, providing full power to the starting motor.

At this point one end of the 'pull-in' coil is connected to battery positive through the starter switch while the other end is connected to positive through the solenoid contacts. The 'pull-in' coil is thus by-passed, drawing no current and the 'hold-in' coil alone keeps the solenoid plunger engaged.

The starter incorporates a single set of contacts and a two piece solenoid plunger which completely closes the contacts even if the pinion and ring gear teeth are misaligned. When this happens, an engagement spring is compressed which forces the pinion into full engagement as soon as the starter begins to turn.

When the key start switch is released, power to the solenoid and motor is removed. The solenoid return spring acting through the pivoted linkage mechanism pulls the drive pinion out of mesh and reopens the solenoid contacts.

Incorporated in the drive pinion assembly is a roller clutch device. This device prevents the armature from rotating excessively if the pinion remains in mesh with the flywheel ring gear after the engine has started.

16 × 16 Transmission Start Inhibitor Switch

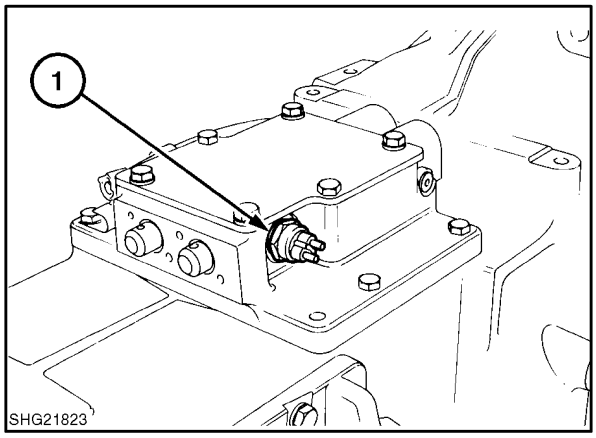

96

12 × 12 and 12 × 12 Dual Command Start Inhibitor Switch.

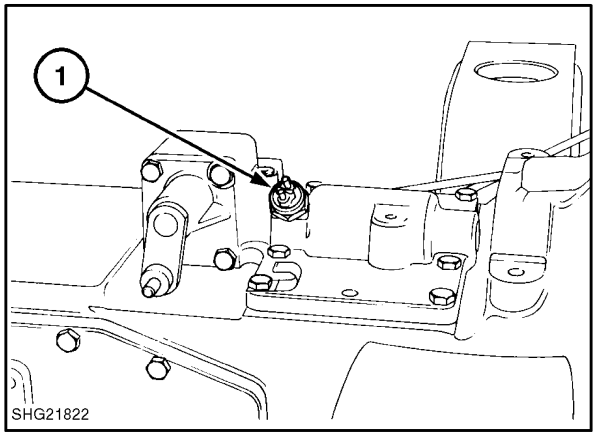

97

8 × 2 Transmission Start Inhibitor Switch

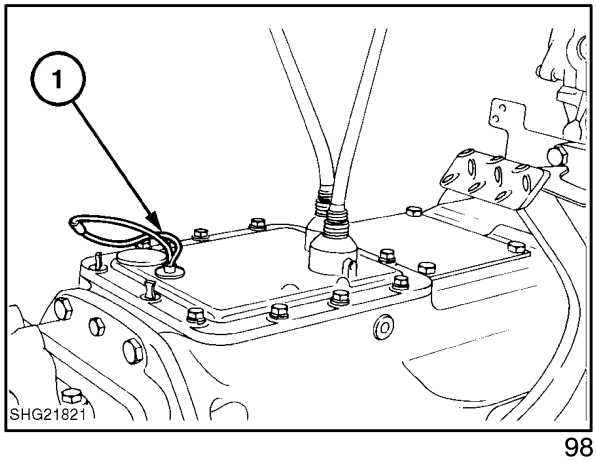

98

FAULT FINDING

Engine Does Not Turn Over When Key Start Is Operated, Transmission In Neutral

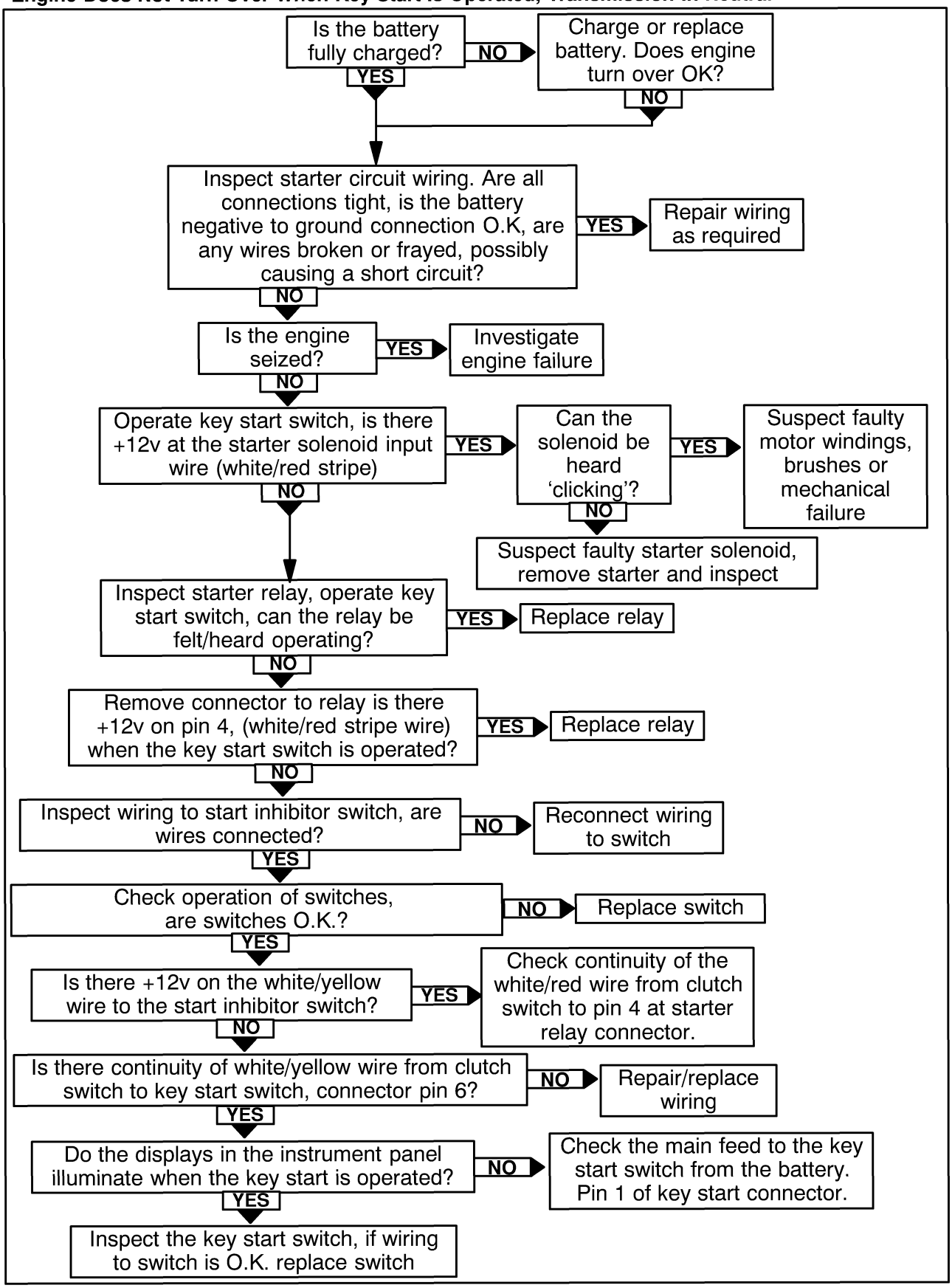

STARTER SYSTEM TESTING ON TRACTOR

For easier and rapid diagnosis and for most conclusive test results, it is recommended that a battery-starter tester (high rate discharge tester) incorporating a 0-20 volt voltmeter and a 0-500 amp ammeter be used to diagnose starting system problems.

When using test equipment follow the manufacturers recommended test procedures. If test equipment is not available the following test procedure, using a standard 0-20 volt voltmeter and 0-500 amp ammeter can be used to determine the correct operation of the starter without removing it from the engine.

Before testing:

- Check that the battery is fully charged.
- Check the complete starting system wiring circuit for frayed or broken wires or loose terminal connections.
- Check the engine is not seized.

Starter Motor Circuit Current Draw

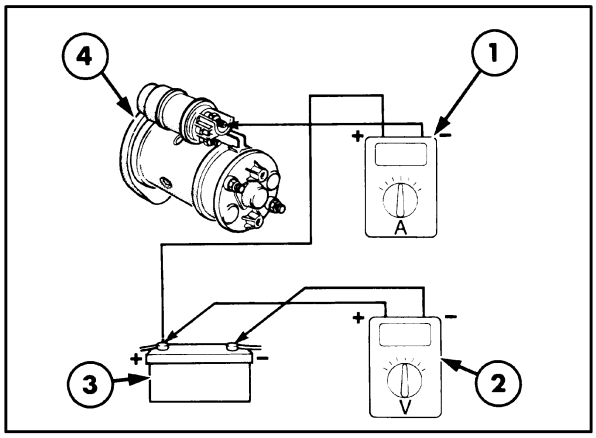

99

1. Disconnect the Battery (3) ground (negative) cable from the battery.
2. Disconnect the battery positive cable from the starter solenoid. Connect the ammeter(1) positive lead to the battery positive terminal and the negative lead to the solenoid input terminal.
3. Reconnect the battery ground (negative) cable to the battery negative terminal.
4. Connect the voltmeter(2) positive lead to the battery positive terminal and the voltmeter negative lead to the battery negative terminal.
5. Disconnect the wire from the fuel injection pump shut off solenoid.
6. Crank the engine while observing the voltmeter and ammeter readings. The voltage should remain steady at around 12 volts with between 250-300 amps being drawn.

- If the current draw is within specification the starting motor (4) is functioning correctly. If the voltage drops during the test proceed to 'Starting System Circuit Resistance'.

- If the current draw is greater than specified, check the circuit as outlined below. If the starting system circuit tests are satisfactory the starting motor is defective and must be disassembled to determine the cause.
- If the current draw is less than specified, the starting motor is defective and must be disassembled to determine the cause.

Starting System Circuit Resistance (Voltage Drop)

If there is an excessive current draw the circuit should be checked by recording voltage drops across the individual components in the circuit

IMPORTANT: *Disconnect the fuel injection pump fuel shut off solenoid wire.*

Battery Positive Cable:

1. Connect the voltmeter positive lead to the battery positive terminal.
2. Connect the voltmeter negative lead to the starting motor solenoid battery terminal.
3. Crank the engine while observing the voltmeter reading. If the voltage exceeds 0.2 volts, check and tighten the cable connections. Recheck the voltage, if still excessive install a new cable.

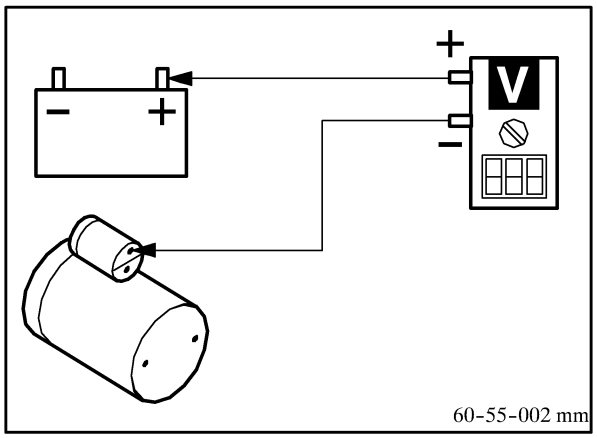

100

Starting Motor Ground Connections:

1. Connect the voltmeter positive lead to the starting motor frame.
2. Connect the voltmeter negative lead to the engine block.
3. Crank the engine while observing the voltmeter reading. If the voltmeter reading exceeds 0.2 volts check the ground connections between the starting motor flange and the rear engine plate.

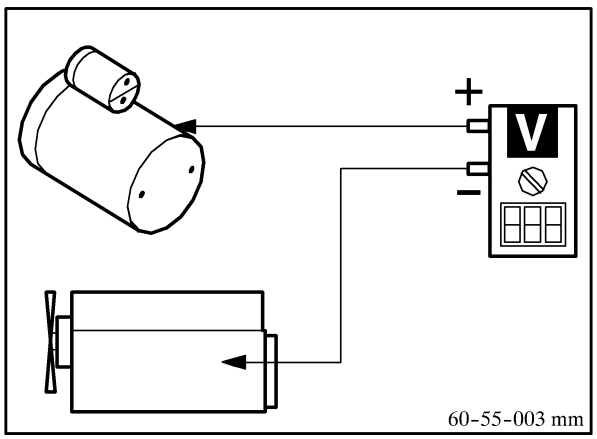

101

Battery Ground Cable:

1. Connect the voltmeter positive lead to the engine block.
2. Connect the voltmeter negative lead to the battery negative terminal.
3. Crank the engine while observing the voltmeter reading. If the reading exceeds 0.2 volts, check and tighten the ground cable connections. Recheck the voltage, if it is still excessive install a new ground cable.

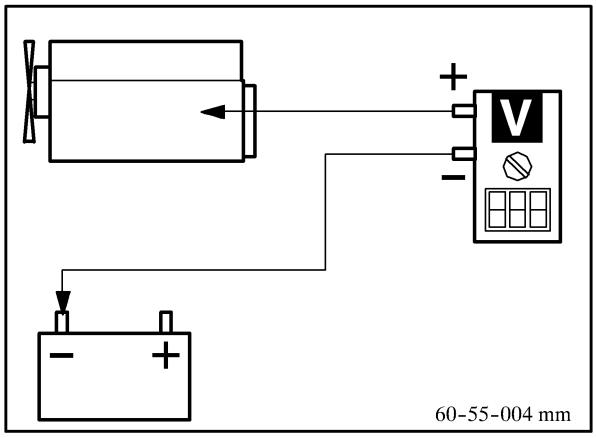

102

STARTER MOTOR REMOVAL AND INSTALLATION

1. Disconnect the battery ground (negative) cable from the battery.
2. Remove the protective cover from the solenoid assembly and disconnect the positive cables to the solenoid and the solenoid coil feed wire.
3. Remove the three starting motor mounting bolts and remove the starting motor.
4. Installation is the reverse of the removal procedure.

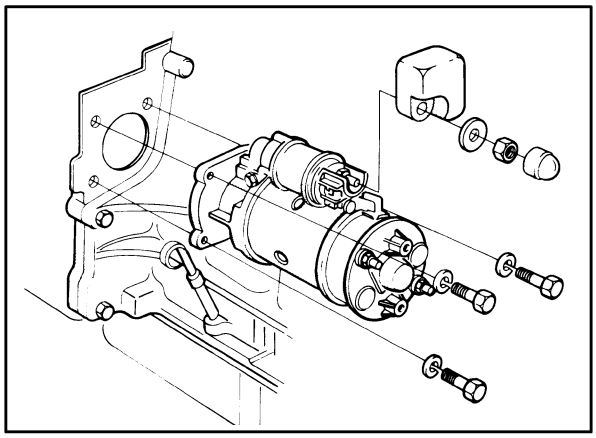
103

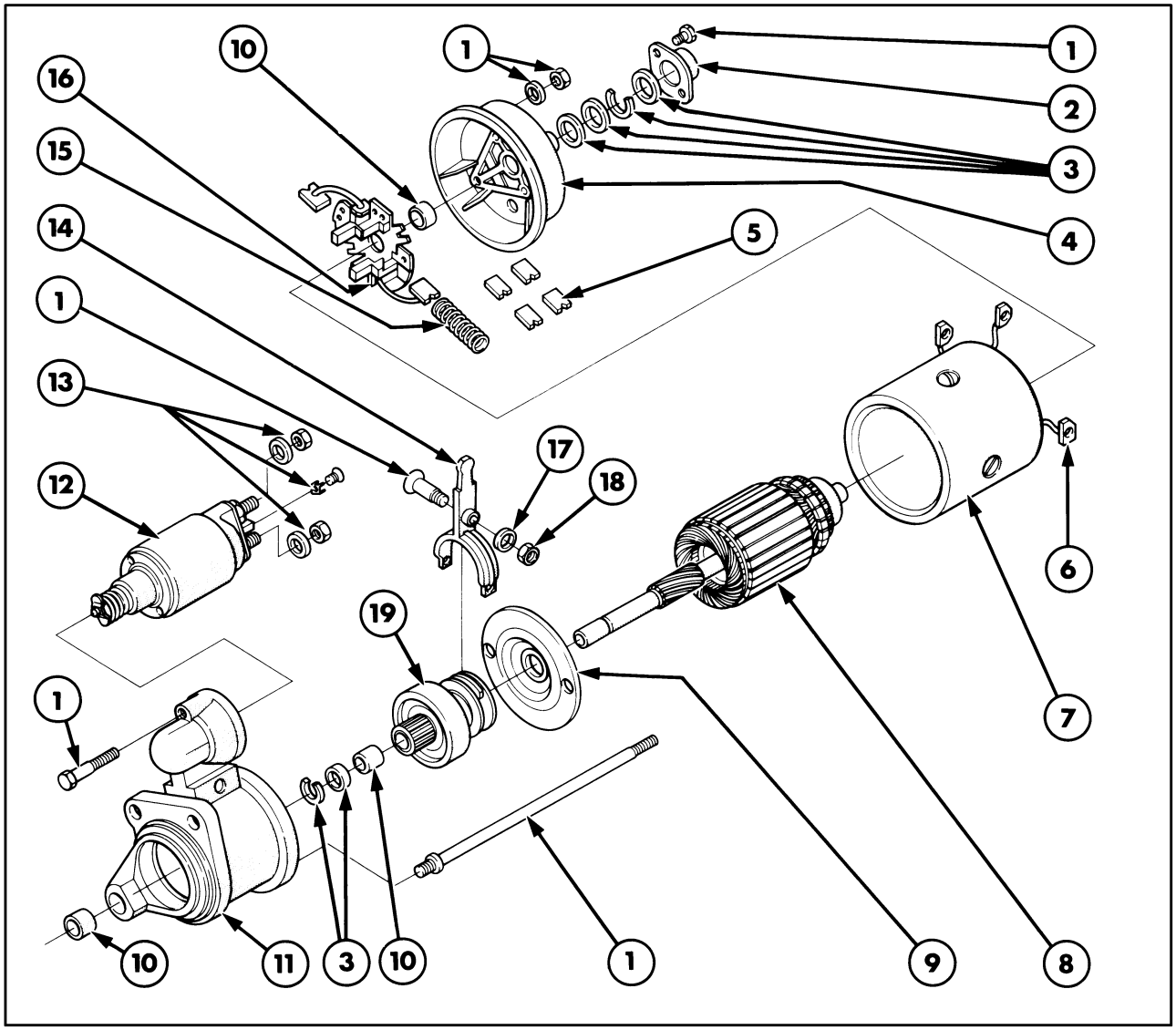

Starter Motor – Exploded View 104

1. Stud and Bolt Kit
2. End Cap
3. Collar and Ring Assembly, Drive Thrust
4. Brush End Plate Assembly
5. Brush Assembly
6. Brush Assembly
7. Field Coils and Housing Assembly
8. Armature
9. Centre Bearing Plate
10. Bushing
11. Housing Assembly
12. Solenoid Assembly
13. Solenoid Hardware Kit
14. Lever Assembly
15. Brush Spring
16. Brush Holder Assembly
17. Washer
18. Nut
19. Drive Assembly

DISASSEMBLY

With reference to Figure 104.

1. Support the starting motor in a soft jawed vice.

2. Disconnect the thick braided wire from the field coil housing to the solenoid assembly.

3. Remove the three screws from the front housing assembly and withdraw the solenoid assembly. Note that the plunger will remain in the drive engagement lever.

4. Remove the solenoid plunger from the drive engagement lever by gripping the plunger and lifting up the front end and releasing it from the drive engagement lever.

5. Remove the two end housing nuts and the two screws retaining the end cap and brush plate to the end housing. Remove the 'C' clip and armature shaft end play shims and withdraw the end housing, leaving the brush gear on the commutator. Remove the thin metal washer from the commutator end of the armature.
6. At this stage of disassembly inspect the brushes and commutator. Check for sticking brushes. If necessary, clean brushes and brush channels with a petrol moistened cloth. Check brushes for wear. If worn below the minimum length specified, of 7.00mm, it will be necessary to replace the complete starter motor.

NOTE: *The brushes are not serviced separately.. They are spot welded into position and not intended to be replaced during the starter motors service life.*

7. Withdraw the motor casing from the armature and drive end bracket.
8. Withdraw the drive engagement lever pivot pin from the drive end housing.
9. Remove the drive assembly and inner plate retaining snap ring from the armature shaft by driving the securing thrust collar squarely off the snap ring with a suitable diameter tube and then levering the snap ring from the groove.
10. Withdraw the armature and drive assembly.

RE-ASSEMBLY

1. Re-assembly of the starting motor follows the disassembly procedure in reverse.

Prior to installation, the armature end play must be checked and the starting motor no load function must be tested.

Checking the Armature End Play:

1. Secure the starting motor in a vice equipped with soft jaws and attach a dial indicator to the drive end housing flange. Locate the dial indicator pointer on the end of the armature shaft.
2. Lever the armature fully forward and zero the dial indicator. Lever the shaft fully rearwards and record the gauge reading.
3. The gauge reading should not exceed 0.4mm (0.015in). If the reading is greater, inspect the armature assembly and the brush end plate assembly for wear. Replace worn components as required and recheck the end play.

Starting Motor No-Load Test:

NOTE: *A fully charged battery and a battery starter tester (high rate discharge tester) with a carbon pile (variable load resistor) should be used to perform this test.*

1. Secure the starting motor in a vice equipped with soft jaws.
2. Connect the battery negative cable (4) to the starting motor mounting flange.
3. Connect a short jumper lead (6) between the solenoid battery and solenoid switch terminals.
4. Connect a voltmeter (3) positive lead to the battery positive terminal, the voltmeter negative lead to the battery negative terminal, the ammeter (1) positive lead to the battery positive terminal and the ammeter negative lead to the solenoid battery or starting motor terminal.
5. Hold a hand tachometer (5) on the end of the armature shaft. Actuate the starting motor by adjusting the carbon pile (2) to give 11.7 volts. When the armature rotates between 7500 and 8500 rev/min. the maximum current draw should not exceed 160 amperes.
6. If the starting motor does not perform to specification, check for grounded field coils, a rubbing armature or a distorted armature shaft.

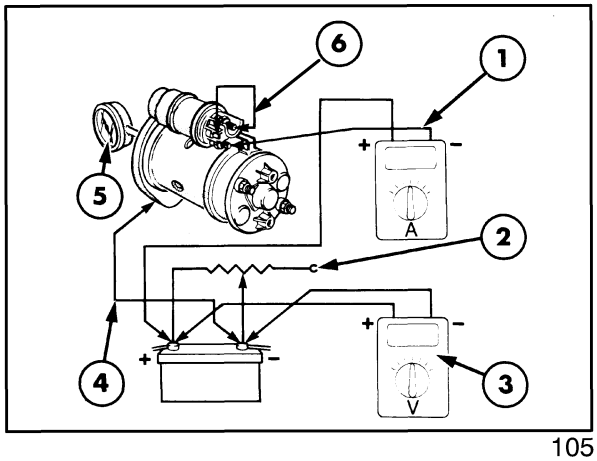

105

BENCH TESTS

Armature

1. The commutator face should be clean and free from burnt spots. If necessary remove any burnt spots using fine glass paper, not emery cloth. Finally clean the commutator with a petrol moistened cloth.
2. If it is necessary to skim the commutator ensure the diameter is not reduced below the minimum specified diameter of 42.5mm. Following skimming the commutator should be polished with a fine glass paper and then wiped clean with a petrol moistened cloth.

NOTE: *Do not cut into the commutator metal when recutting insulation slots.*

3. Armature insulation can be checked by connecting an ohmmeter between the commutator segments and the armature shaft. There should be an infinity reading, i.e, no continuity.

4. To test the armature for short circuits it is necessary to use suitable armature testing equipment, the only alternative is to check the armature by substitution.

5. If there is evidence that the armature circumference has been in contact with the pole pieces, then the armature bearings are probably excessively worn. First check that the pole pieces are tight and that the armature runs true in a lathe, then if necessary renew the armature bearings.

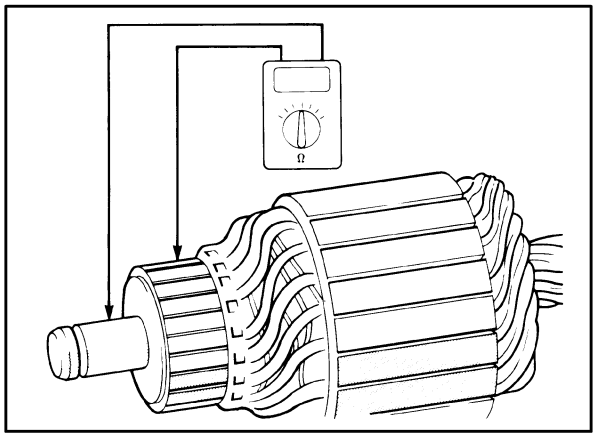

106

Field Coils

1. To test the insulation of the field coils connect an ohmmeter in turn between each of the field winding brushes and a clean unpainted part of the housing. There should be no reading, i.e, no continuity.

2. To test the field winding continuity connect an ohmmeter in turn between each of the field winding brushes and the main feed terminal (thick braided wire). A reading of 1 MΩ should be indicated.

3. If a fault is indicated in the field windings it will be necessary to replace the complete field coils and housing assembly.

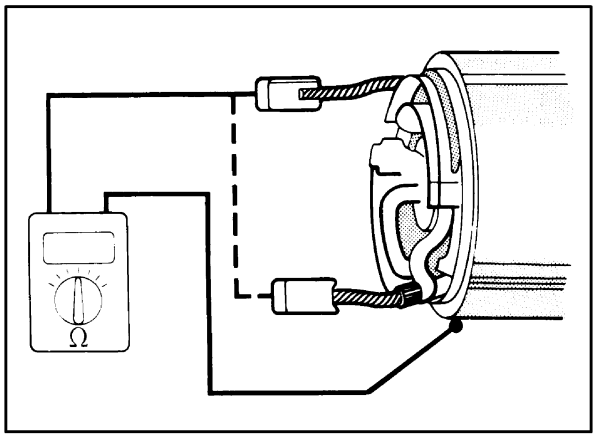

107

Bearing Bushes

1. Inspect the bushes in the brush end plate assembly and pinion drive end housing for wear. Install the armature shaft and observe

   the free play, replace bushes where free play appears excessive. Inspect the field poles for signs of rubbing by the armature which may also have been caused by worn bushes.

Drive Pinion Assembly

1. Check the operation of the roller clutch. The pinion should rotate clockwise only. If the pinion is stuck or rotates in both directions, or if the pinion teeth are damaged install a new drive assembly.

If damaged pinion teeth are evident, check the flywheel ring gear teeth as described in Section 2, Engine Systems.

CHARGING SYSTEM

SPECIFICATIONS

	Alternator Type	
	A127-55	A127-1R
Polarity	Negative Ground	
Nominal Voltage	12.0 v	
Maximum Rev/Min.	15,000	18000
Maximum Output	55 Amps	100 Amps
Regulator Controlled Voltage	13.6 - 14.4 v	
Rotor Field Winding Resistance	2.9Ω	2.6 Ω
Stator Field Winding Resistance	0.2Ω	0.075 Ω
New Brush Length	20.0 mm	
Minimum Brush Length	5.0 mm	
Brush Spring Pressure	1.3-2.7 N (4.7-9.8 oz)	

TORQUE SPECIFICATIONS

	lbf.ft	Nm
Alternator Through Bolts	4.0	5.5
Pulley Retaining Nut	52.0	70
Rectifier Attaching Screws	3.0	4.0
Regulator and Brushbox Screws	2.0	2.7
Terminal Nuts	2.0	2.7

Description and Operation

Magnet Marelli (Lucas) A127 type alternators are fitted to all models. Used in 55 Amp form with an external cooling fan and in 100 Amp form with an internal cooling fan. The alternator is mounted at the front of the engine and is driven from a crankshaft pulley via a 'poly vee' drive belt. The alternators feature integral regulators.

100 Amp Alternator

20. Earth (Ground) Connection
21. Engine Speed Sensor Connection (W Terminal)
22. Warning Lamp (D+ terminal)
23. Output Connection (B+ Terminal)
24. Protective Terminal Sleeve

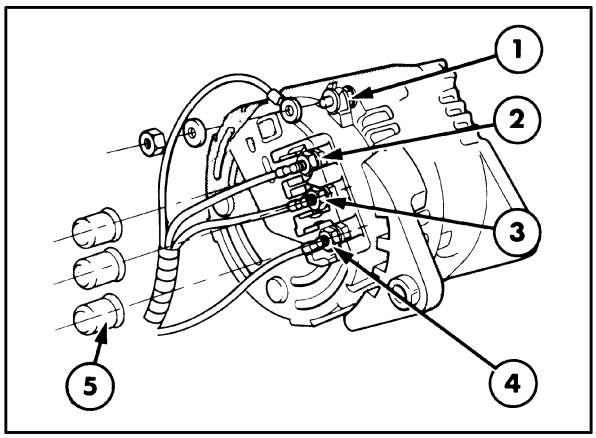

108

55 Amp Alternator

1. Earth (Ground) Connection
2. Engine Speed Sensor Connection (W Terminal)
3. Warning Lamp (D+ terminal)
4. Output Connection (B+ Terminal)
5. Protective Terminal Sleeve

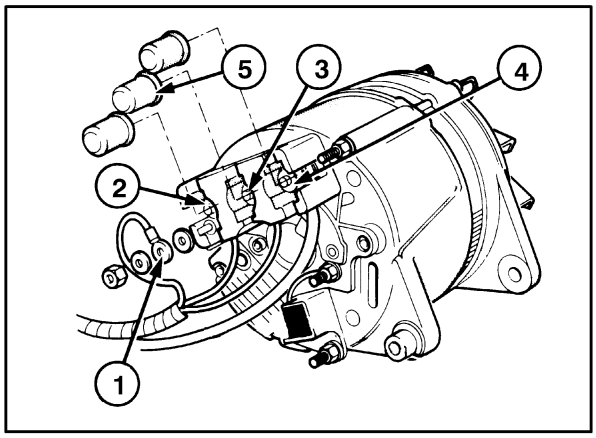

109

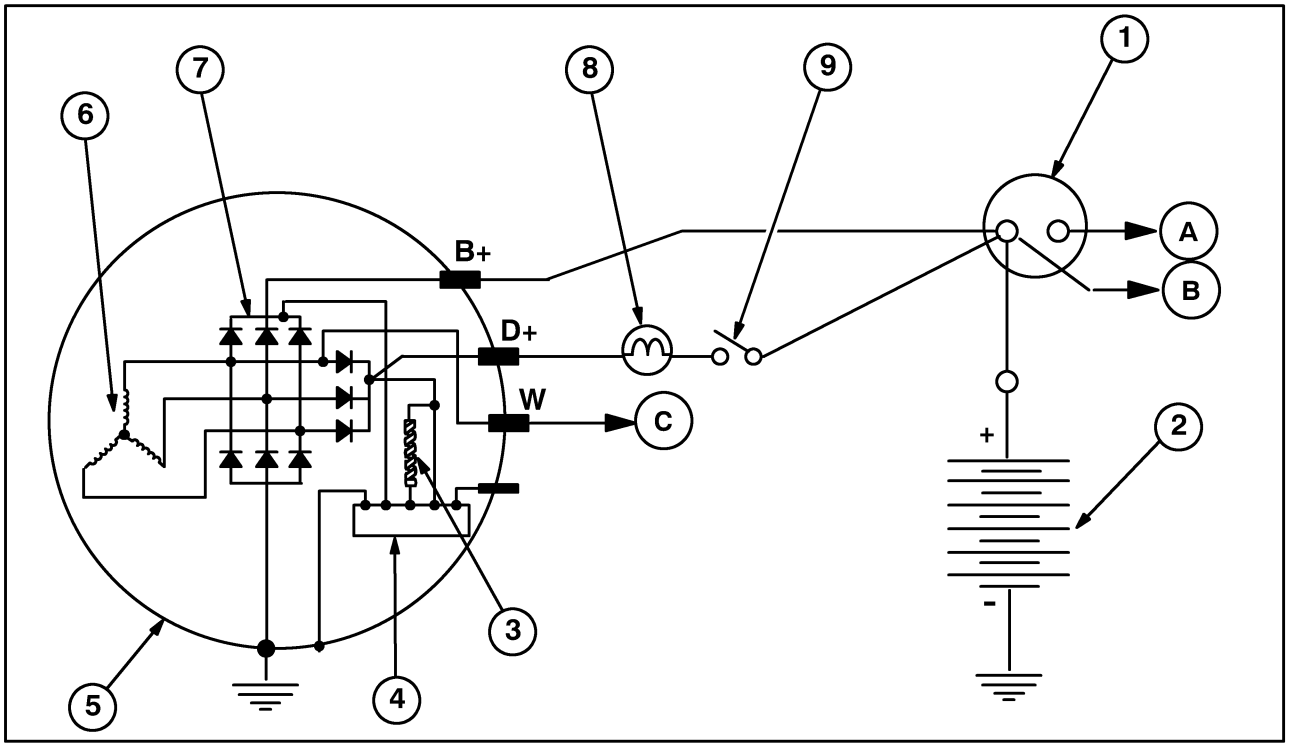

Alternator Charging Circuit 110

A To Starter Motor
B To Starter Relay
C Speed Sensor Terminal to: Diagnostic Plug, to Module Instrument Cluster and Transmission/EDC Processor.

1. Starter Solenoid
2. Battery
3. Rotor Field Winding
4. Regulator
5. Alternator Frame
6. Stator Output Windings (55 Amp Alternator)
7. Rectifier Pack
8. Charge Indicator Lamp
9. Key Start Switch

Alternator Operation

With reference to Figure 110.

When the key start switch is turned on a small current flows from the battery through the rotor field wiring. The circuit is made via the charge indicator warning lamp, alternator terminal 'D+' the rotor field winding, the alternator regulator and ground.

At this stage the warning light is illuminated and the rotor partially magnetised.

When the engine is started and the partially magnetised rotor revolves within the stator windings a 3–phase alternating current is generated. A constant portion of the generated current is converted to direct current by the three field diodes incorporated in the rectifier pack.

This direct current is fed back to supplement the current flowing through the rotor field winding.

This action results in an ever increasing magnetic influence of the rotor along with an associated rapid rise in generated output current and voltage.

During the rise in generated output voltage (reflected at the 'D+' terminal) the brilliance of the warning lamp is reduced and when the voltage at the 'D+' terminal equates to that at the battery side of the warning light the lamp is extinquished.

The voltage continues to rise until the predetermined regulated voltage level is reached.

In the event of drive belt breakage the voltage will not build up within the alternator and so the charge indicator light will remain on to indicate failure.

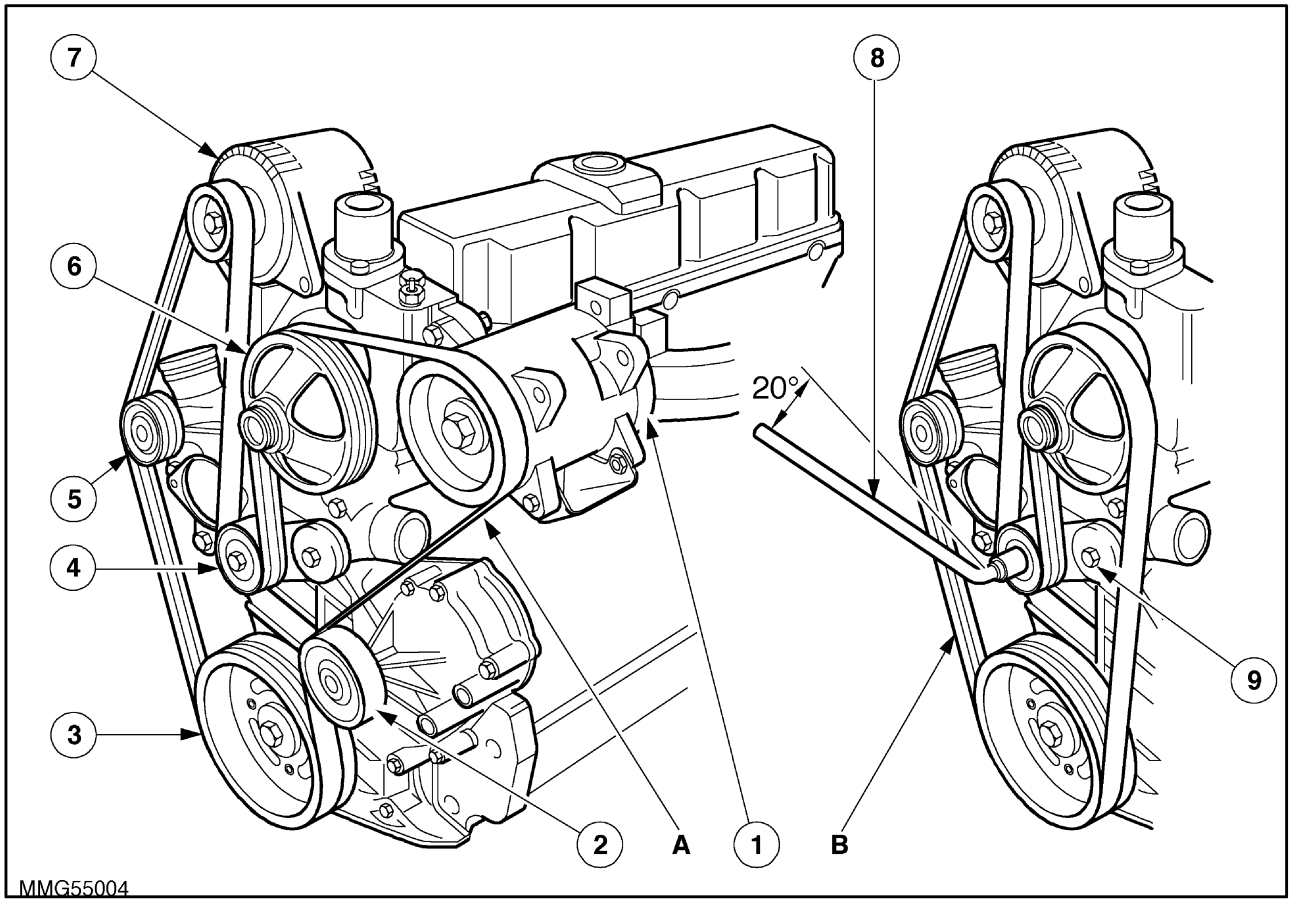

Fan Belt Tensioner 111

A. Fan Belt with Air Conditioning

B. Fan Belt less Air Conditioning

1. Air Conditioning Compressor (optional)
2. Idler Pulley only with (Air Conditioning)
3. Crankshaft Pulley
4. Tensioner Assembly
5. Idler Pulley
6. Water Pump Pulley
7. Alternator
8. Torque Wrench
9. Tensioner Attaching Bolt

SYSTEM TESTING AND FAULT FINDING

Service Precautions

To avoid damage to the components of the alternator charging system, service precautions must be observed as follows:

- **NEVER** make or break any of the charging circuit connections, including the battery, when the engine is running.
- **NEVER** short any of the charging components to ground.
- **ALWAYS** disconnect the battery ground cable (negative) when charging the battery on the tractor using a battery charger.
- **ALWAYS** observe correct polarity when installing the battery or using a slave battery to start the engine.

CONNECT POSITIVE TO POSITIVE AND NEGATIVE TO NEGATIVE

Preliminary Checks

Prior to electrical testing thoroughly inspect the charging and electrical system.

Check all leads and connections for continuity and tightness.

2. **Check the battery**

Using a hydrometer check the individual battery cells. The battery should be at least 70% charged and in good condition.

3. **Check the drive belt**

Inspect the alternator drive belt and pulley, ensuring that both are clean, free from oil and grease and in good condition.

The alternator drive belt is automatically tensioned by a spring tensioner mounted at the front of the engine, shown in Figure 111. If the the belt tension is suspect, check the tensioner assembly as follows:

Fan Belt Tensioner Removal

1. The fan belt should be removed in the following manner. Place a lever with 1/2 inch square drive attachment into the 1/2 inch square hole of the tensioner arm and rotate the lever clockwise. Remove the fan belt from the pulley and allow the tensioner to return to its untensioned position once the belt has been removed.

2. Remove the tensioner from the pump by loosening and removing the centre attaching bolt, item 6 Figure 111.

Inspection and Repair

1. Checking of the tensioner assembly operation should be carried out, with the tensioner assembly still attached to the front plate fuel injection pump gear cover. To check the spring load, place a "break back" torque bar pre-set to, 52 – 63 lbf. ft (70 – 85 Nm) (7.1 – 8.7 kgf.m), into the pulley arm 1/2 inch squre drive hole. Raise the lever up through an arc of 20° maximum. If the torque bar does not "break" within the range a new tensioner assembly is required.

2. Ensure the tensioner pulley rotates freely by hand. If not replace with new parts.

Re-Assembly

1. Fit a new pulley to the assembly if required, and torque the attaching bolt to, 34.5 – 44 lbf.ft (46.5 – 60 Nm), (4.7 – 6.1 kgf.m)

2. To re-assemble the arm assembly, position the tensioner on to the front plate fuel injection pump gear cover, fit the mounting bolt through the assembly, and torque the bolt to, 34.5 – 44 lbf.ft (46.5 – 60 Nm), (4.7 – 6.1 kgf.m).

3. Refitment of the fan belt is the reverse of the removal procedure, but ensure the "Poly V" belt, is positioned correctly onto all of the pulleys.

3. Check the Warning Lamp

Turn on the key start switch and check that the warning lamp is fully illuminated.

If the warning lamp is not fully illuminated check the bulb. If the bulb is not the cause of the fault carry out the Alternator wiring connections test as detailed under 'initial tests' in this section.

If the warning lamp is illuminated start the engine and run above idling speed. The lamp should go out.

If the lamp does not go out, stop the engine and remove the wire from the D+ terminal. If the lamp now goes out a faulty alternator component is indicated. Conduct the 'Alternator components tests' as detailed in this section.

If the warning lamp remains illuminated, check for a short circuit to earth (ground) between the 'D+' cable end and the warning lamp.

INITIAL TESTS

The initial tests may be performed without removing any of the charging circuit components from the tractor and enable the following items to be checked:

- Alternator wire connections
- Alternator charging current and controlled voltage
- Alternator charging circuit volt drops
- Alternator maximum output performance

Test equipment required:

- Voltmeter (0-30 volts moving coil type
- Millivoltmeter (0-1 volt)
- Ammeter (0-110 Amperes moving coil type)
- 1.5 Ohm 110 Amperes variable load resistor

NOTE: *Most commercial test equipment incorporates several testing devices within a single unit . Use such equipment in accordance with the manufacturers instructions.*

1. Alternator Wiring Connections Test

With reference to Figure 112.

1. Disconnect the battery

2. Disconnect the B+(2) and D+(3) terminals from the alternator.

3. Reconnect the battery and turn the key start on but do not start the engine. Connect a voltmeter(4) between each terminal and earth (ground), (1). Battery voltage should be registered.

If battery voltage is not registered a continuity fault in the external cable circuitry must be traced and remedied, refer to the circuit diagram shown in Figure 110.

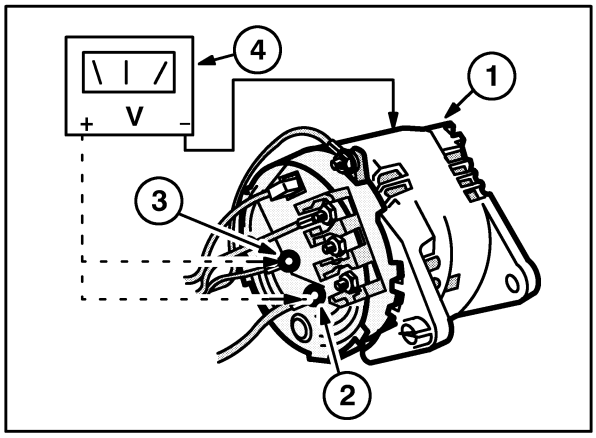

112

4. Connect the D+ terminal, warning lamp (brown/yellow) wire, to earth (ground). The warning lamp should illuminate.

5. Disconnect the battery and reconnect the removed alternator cable connections to the alternator.

NOTE: *If the warning lamp fails to illuminate when the cable is reconnected to the alternator, a fault is indicated in the alternator regulator or rotor circuits. Ensure that the D+ terminal is clean and then conduct the alternator component tests as detailed in this section.*

2. Charging Current And Controlled Voltage Tests

With reference to Figure 113.

1. Ensure all tractor electrical components are switched off and the key start switch is in the 'off' position.

2. Disconnect the battery negative terminal and disconnect the B+ terminal(4) of the alternator.

3. Connect an ammeter(1), between the removed (brown) cable(3) and the B+ alternator terminal.

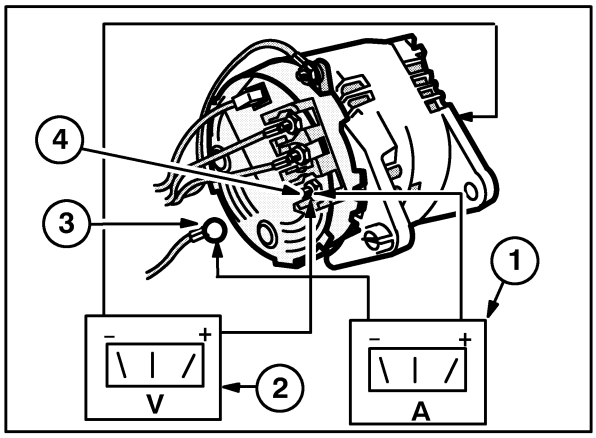

113

4. Connect a voltmeter(2) between the alternator B+ terminal and earth (ground)

5. Reconnect the battery. Start and run the engine at 2000 rev/min. and observe the ammeter and voltmeter readings.

The voltmeter should register in excess of battery voltage and when the ammeter reading falls below 10 Amperes the voltmeter reading should stabilise at 13.6–14.4 volts.

If the voltmeter reading exceeds 14.4 volts the alternator regulator must be replaced as described in this section. (when a new regulator has been installed conduct tests 4 and 5).

If the voltmeter reading is below 13.6 volts a faulty alternator component or a high resistance fault in the external connections of the charging system is indicated.

If the ammeter registers zero amperes a faulty alternator component is indicated. Turn off the engine and conduct the 'alternator component tests' as detailed in this chapter.

3. Charging Circuit Volt Drop Tests

(a) Insulated-Side Volt Drop Tests

With reference to Figure 114.

Ensure the key start switch is in the 'off' position.

1. Disconnect the battery negative cable and disconnect the B+ cable(1) from the alternator
2. Connect a millivoltmeter(4) between the battery positive terminal and the B+ cable(5). (Positive side to cable).
3. Securely connect an ammeter(2) between the B+ terminal of the alternator and the B+ cable (negative side to cable)
4. Reconnect the battery negative cable and connect a variable load resistor(3), with the slider in the minimum current draw position (maximum resistance), across the battery terminals.
5. Start the engine and increase the speed to 2000 rev/min.
6. Slowly increase the current loading of the resistor (decrease resistance) until the ammeter registers 55 or 100 Amperes depending on alternator type.
7. Observe the millivoltmeter reading which should not exceed 400 millivolts.

If the reading is in excess of 400 millivolts, a high resistance fault is indicated in the external circuitry.

If the required alternator output cannot be achieved and the millivoltmeter reading is less than 400 millivolts, then a faulty alternator component is indicated. Conduct the' alternator component tests' as detailed in this section.

8. Stop the engine.

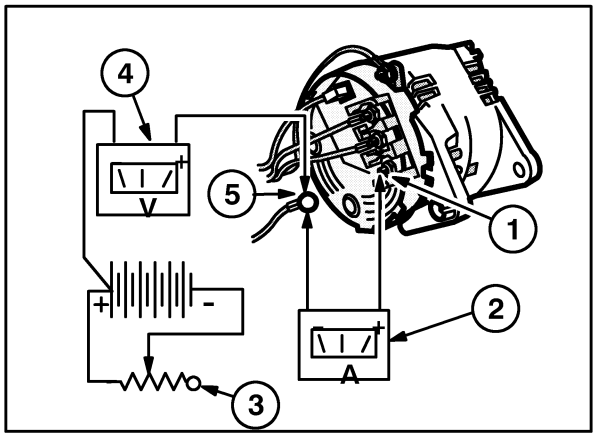

114

(b) Ground-Side Volt Drop Test

With reference to Figure 115.

9. Ensure the key start switch is in the 'off' position.

10. The circuit is the same as that used in the previous test except for the millivoltmeter(4) which is now connected between the battery negative terminal and the alternator frame (negative side to frame).

NOTE: *Ensure the variable load resistor(3) is in the minimum current draw position (maximum resistance).*

11. Start the engine and increase the speed to 2000rev/min.

12. Slowly increase the current loading of the resistor (decrease resistance) until the ammeter(2) registers 55 or 100 Amperes depending on alternator type.

13. Observe the voltmeter reading which should not exceed 200 millivolts.

If the reading is in excess of 200 millivolts a high resistance fault is indicated in the external circuitry.

If the required alternator output cannot be achieved and the millivoltmeter reading is less than 200 millivolts then a faulty alternator component is indicated. Conduct the alternator component tests as detailed in this section.

14. Stop the engine.

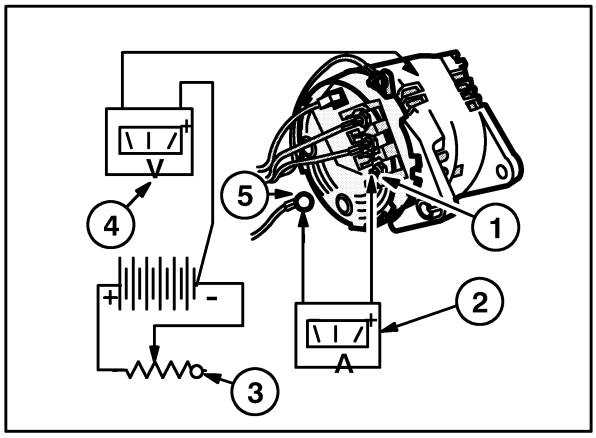

115

4. Alternator Maximum Output Performance Test

With reference to Figure 116.

1. Ensure the key start switch is in the 'off' position.

2. Disconnect the battery negative cable and disconnect the B+ cable (5) from the alternator.

3. Securely connect an ammeter(2) between the B+ terminal(1) of the alternator and the B+ cable (negative side to cable).

4. Connect a voltmeter(4) between the alternator B+ terminal and earth (ground).

5. Reconnect the battery, start and increase the engine speed to 2000 rev/min.

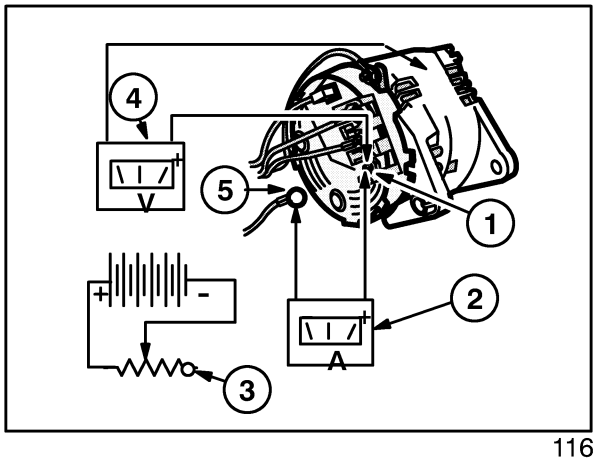

116

6. Slowly increase the the current loading of the resistor(3) (decrease resistance) until the ammeter registers either 55 or 100 Amperes depending on alternator type.

7. Observe the voltmeter reading which should not fall below 13.6 volts

If the reading falls below 13.6 volts a faulty alternator component is indicated. Conduct the 'alternator component tests' as detailed in this section.

ALTERNATOR COMPONENT TESTS

The component tests which should only be conducted if the INITIAL TESTS have indicated a faulty alternator component, will enable the following items to be checked:

- Regulator
- Rotor Field Winding Continuity
- Brushes and Springs and Rotor Slip Rings

NOTE: *The component tests detailed previously may be performed with the alternator installed on the tractor. Testing of the other alternator components will necessitate removal of the alternator from the tractor. Refer to the 'Overhaul' section of this Chapter.*

IMPORTANT: *Prior to removal of the alternator cables from the alternator ensure that the key start switch is in the 'off' position and the battery negative cable is disconnected.*

Test equipment required:

- 12 volt battery
- Multimeter
- 2.2 Watt Test Lamp

1. Regulator and Rotor Field Circuit Test

With reference to Figure 117.

1. Disconnect all of the alternator cables.

2. Connect a 12 volt battery and a 2.2 Watt test lamp(2) in series between the D+(1) and the alternator frame (negative side to frame).

3. The test lamp should illuminate.

If the test lamp is not illuminated a fault is indicated in the rotor circuit. Check brushes, slip rings and continuity of rotor field windings.

If examination indicates these parts to be satisfactory the regulator may be suspect.

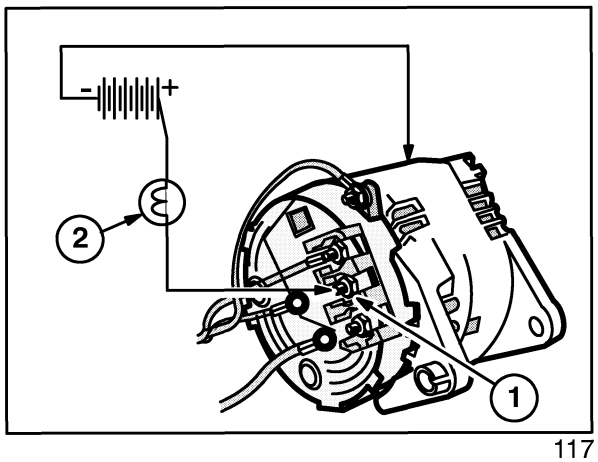

117

2. Rotor Field Winding Continuity Test

With reference to Figure 118

1. Remove the regulator and brushbox assembly as described in this chapter.
2. Connect an ohmmeter(3) between the two slip rings(2). The resistance should read 2.6 ohms at 20°C.

If the resistance is outside of the specification renew the rotor(1) as detailed in the following overhaul section.

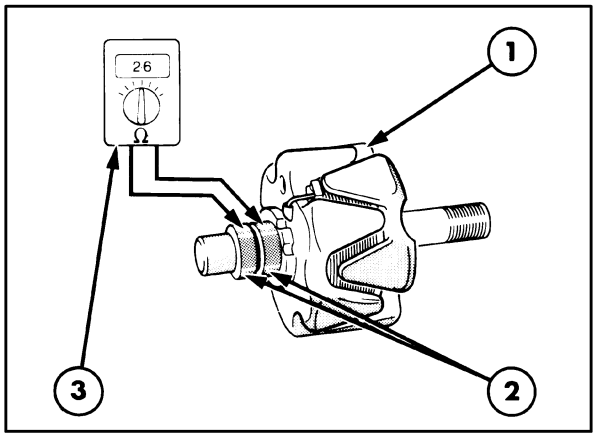

118

3. Brushes-and-Springs and Rotor Slip Rings

1. Remove the regulator and brushbox assembly as described in this Chapter.
2. Ensure the brushes and slip rings are clean and check for freedom of movement of the brushes in the brushbox moulding.
3. Check the brush spring pressure with a push type spring gauge and record the spring pressure when the brush end face is flush with the moulding. Install a new regulator and brushbox assembly if the pressure is less than specified.

If the visible length of the brushes(1) in the free position is less than 0.25 in. (5mm) this is a probable cause of open circuit in the field circuit and the regulator and brushbox assembly should be renewed, Figure 119.

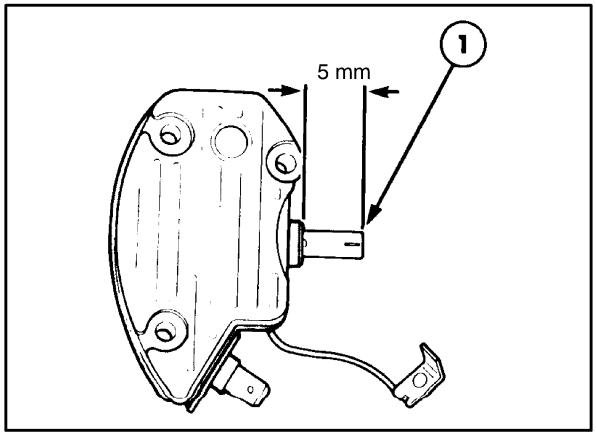

119

NOTE: *The brushes are an integral part of the regulator and brushbox assembly and cannot be replaced as individual items.*

ALTERNATOR OVERHAUL AND COMPONENT TESTING

Alternator Removal

With reference to Figure 120

1. Disconnect the battery negative cable.
2. Disconnect the four cables from the rear of the alternator.
3. Remove the alternator drive belt in the following manner. Place a lever with socket attachment, onto the tensioner retaining bolt and gently lever the tensioner up, Figure 111. Remove the fan belt from the pulley, and allow the tensioner to return to its untensioned position once the belt has been removed.
4. Remove the alternator arm(2) and the lower mounting through bolts and remove the alternator(1) from the engine bracket(3).

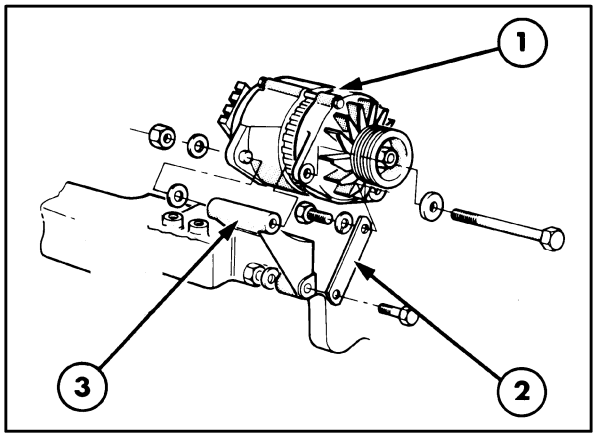

120

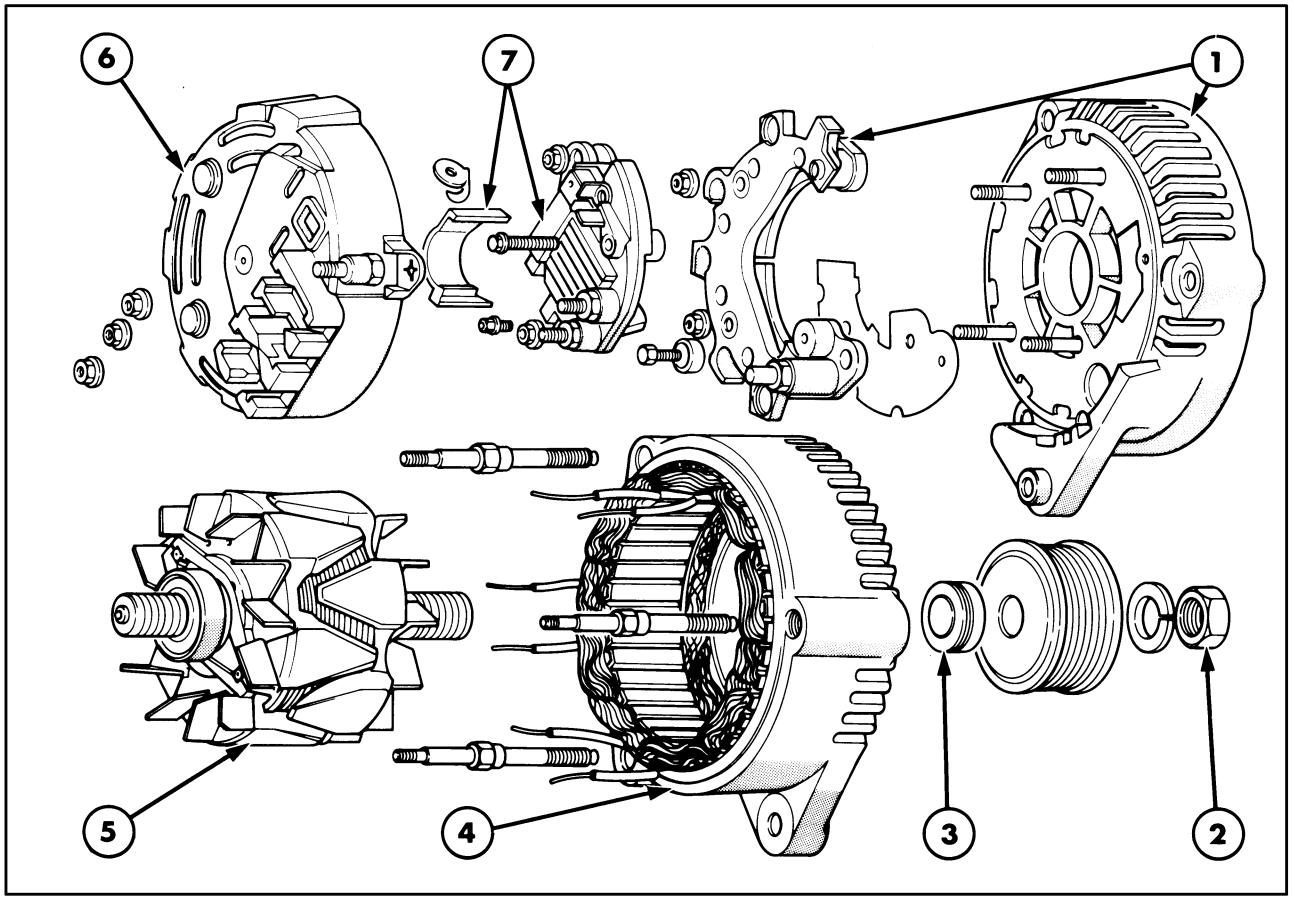

100 Amp Alternator Components 121

1. Rectifier and Housing Assembly
2. Pulley Retaining Nut
3. Spacer
4. Stator and Housing Assembly
5. Rotor Assembly
6. End Cover
7. Regulator and Brushbox Assembly

Disassembly - 100 Amp Alternator

With reference to Figure 121

1. Remove the three nuts securing the plastic end cover.

2. Remove the nut securing the blue wire to the warning lamp terminal and disconnect the wire. Remove the two bolts and two nuts securing the regulator and brushbox assembly, withdraw the assembly from the alternator.

3. Using a suitable soldering iron, unsolder the six wires from the stator to rectifier.

4. Remove the three nuts securing the two halves of the outer casing. Mark each half of the casing to aid reassembly and carefully pull the casing apart, it may be necessary to gently tap the casing on the mounting lugs.

5. Remove the nut securing the pulley to the rotor shaft and withdraw the rotor from the casing.

6. It is not necessary to remove the rectifier from the casing as these are serviced as one unit.

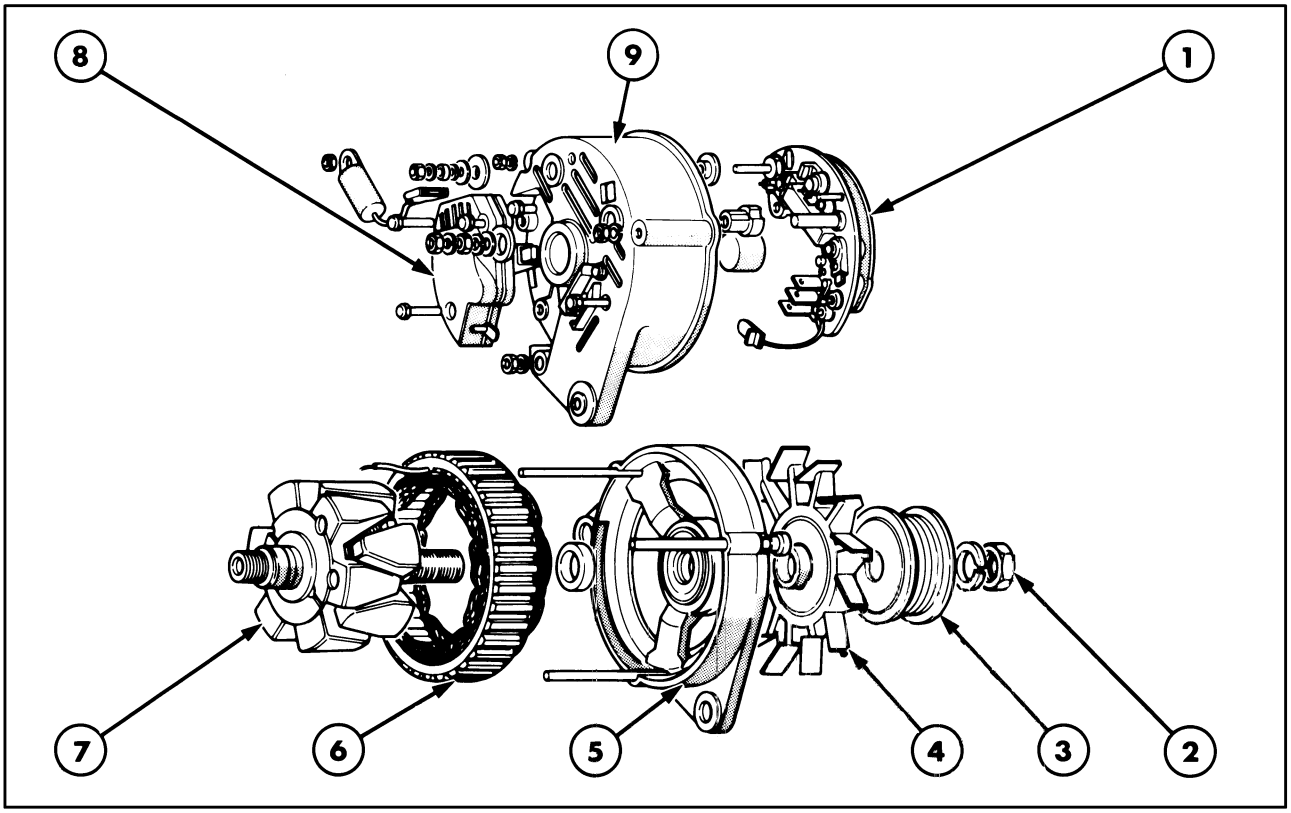

55 Amp Alternator Components 122

1. Rectifier assembly
2. Pulley Retaining Nut
3. pulley
4. Cooling Fan
5. Front End Housing
6. Stator
7. Rotor
8. Regulator and Brushbox assembly
9. Rear End Housing

Disassembly - 55 Amp Alternator

With reference to Figure 122.

1. Remove the four nuts securing the terminal block to the alternator.

2. Remove the nut from the temperature sensor terminal block.

3. Remove the three securing bolts and withdraw the regulator/brushbox assembly.

4. Unscrew and remove the remaining three nuts from the alternator through bolts. With a soft mallet tap the threaded end of the through bolts to release the spline at the hexagon head end.

5. Mark the alternator front end bracket, stator and rear end bracket to ensure correct alignment on reassembly.

6. Gently tap the rear face of the alternator front end bracket to separate the front end bracket and rotor assembly from the rear end bracket, stator and rectifier assembly.

7. Remove the nuts, washers and insulators from the stud terminals on the alternator rear end bracket and the two rectifier retaining screws. Remove the stator and rectifier from the rear end bracket.

8. Unsolder the stator leads from the tags on the rectifier, using a pair of pliers as a heat sink to prevent the diodes from overheating.

9. Remove the nut, washer, pulley, fan and spacer from the rotor shaft.

10. Press the rotor shaft out of the front end bracket bearing.

COMPONENT TEST

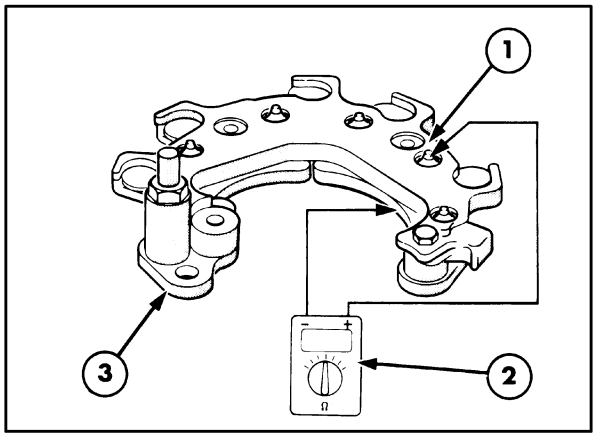

123

Rectifier Assembly - Diode Testing 100 Amp Alternator

With reference to Figure 123.

1. Test each of the nine diodes separately, using a multimeter with a diode check facility or a multimeter set on the resistance scale.

2. Connect one test lead onto the lower plate(3) and the other to the diode pin(1).
   On a multimeter(2) with the diode check facility, note if a reading of 0.49 (volts) is shown. Reverse the test lead connections. The meter should indicate 0.49 (volts) during one half of the test and 0 volts with the leads reversed. Repeat this test on all nine diodes. If any one diode fails this test it will be necessary to replace the rectifier and housing assembly.

3. Where only an ohmmeter is available repeat the above test observing the following results, 0 ohms with leads in one direction and when the test leads are reversed a reading of between 900-1000KΩ, again if any one diode fails this test it will be necessary to replace the rectifier and housing assembly.

Rectifier Assembly - Positive / Negative Diode Testing 55 Amp Alternator

With reference to Figure 124. Test each of the six diodes separately as follows:

1. Connect a multimeter(2) in series with one of the diodes. One test lead is applied to the diode connecting pin(1) and the other lead to the plate into which the diode is mounted.

2. Note the resistance shown on the multimeter. Reverse the test lead connections.

3. The multimeter should indicate an open circuit (infinity ohms) during one half of the test only. If any one diode fails this test the complete rectifier will need replacing.

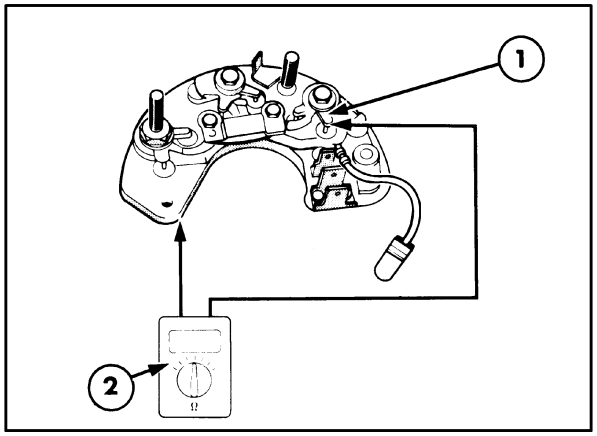

124

Rectifier Assembly – Field Diode Testing 55 Amp Alternator

With reference to Figure 125. Test each field diode separately as follows:

1. Connect a multimeter(2) in series with the field diode module. Apply the negative test lead to the D+ terminal connection(1) and the other lead in turn to each of the field diode connections(3).
2. Note the resistance shown on the multimeter. Reverse the test lead connections.
3. The multimeter should indicate an open circuit (infinity ohms) during one half of the test only. If any one diode fails this test the complete rectifier will need replacing.

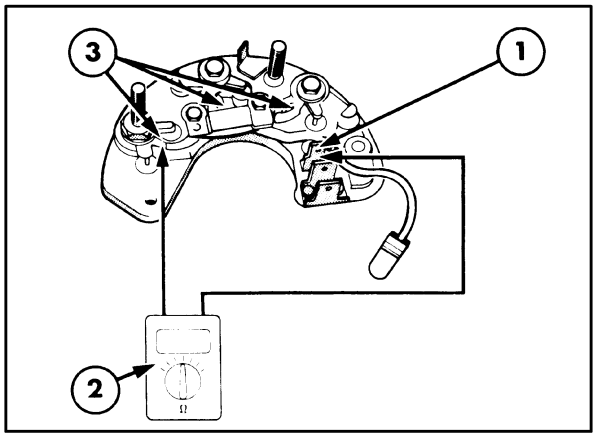

125

Rectifier Insulation 100 Amp Alternator

With reference to Figure 126.

1. Check the insulation of the rectifier to the casing. With an ohmmeter (2), connect the test leads between the alternator casing(3) and the positive plate of the diodes(1). An infinity reading should be displayed, therefore indicating an open circuit. If a resistance of any kind is indicated, i.e, a short circuit, the rectifier and housing assembly should be replaced.

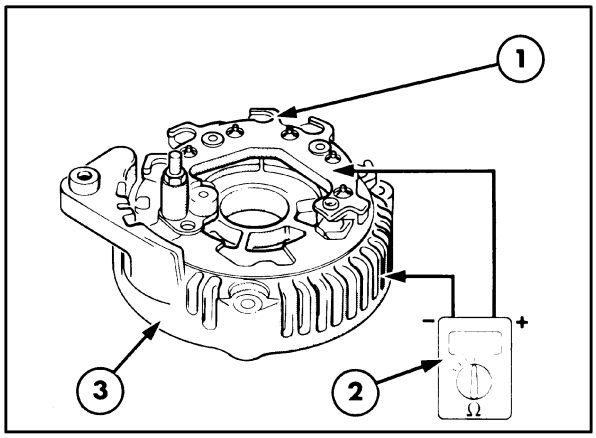

126

Stator Test – Winding Continuity 100 Amp Alternator

With reference to Figure 127.

1. Connect the ohmmeter(2) test leads between the pairs of wires, A, B and C. There should be a small resistance of 0.1Ω, between each pair of wires. If a resistance higher than this is registered it will indicate a possible break within the winding, i.e, an open circuit. A lower reading, for example 0.0Ω will indicate a short circuit within the winding. If any one of the three pairs of wires fail the test a new stator(1) and housing assembly will be required.

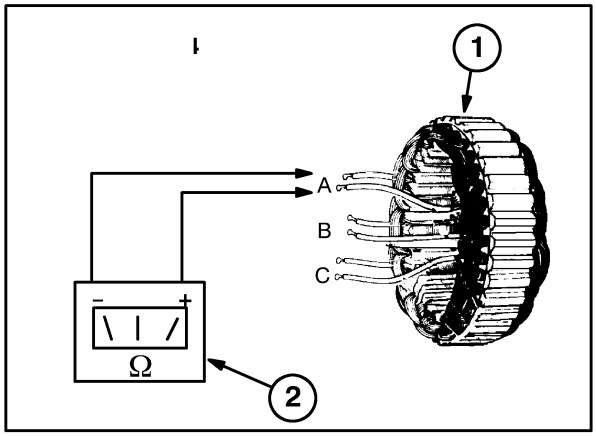

127

Stator Test – Winding Continuity
55 Amp Alternator

With reference to Figure 128

1. Connect the ohmmeter(3) test leads between the A, B and C wires(2). There should be a small resistance of 0.1Ω, between each of the wires. If a resistance higher than this is registered it will indicate a possible break within the winding, i.e, an open circuit. A lower reading, for example 0.0Ω will indicate a short circuit within the winding. If the test proves unsatisfactory a new stator(1) and housing assembly will be required.

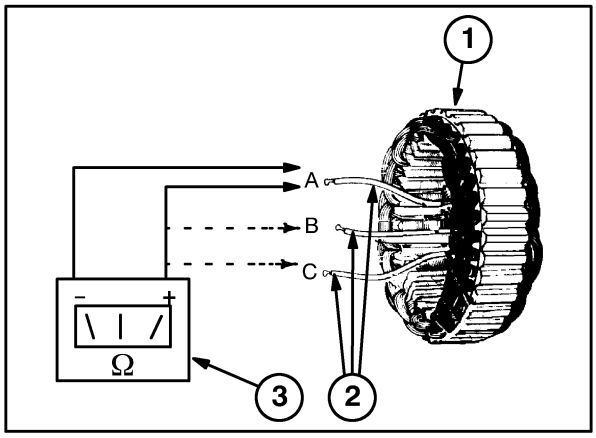

128

Stator Test – Insulation
100 Amp Alternator

With reference to Figure 129.

1. Check the insulation of each pair of windings to each other and then each pair to the alternator casing. There should be no continuity between the three pairs of windings and no continuity to the casing. If any ohmmeter(2) reading other than open circuit is indicated in any test it will be necessary to replace the stator(1) and housing assembly.

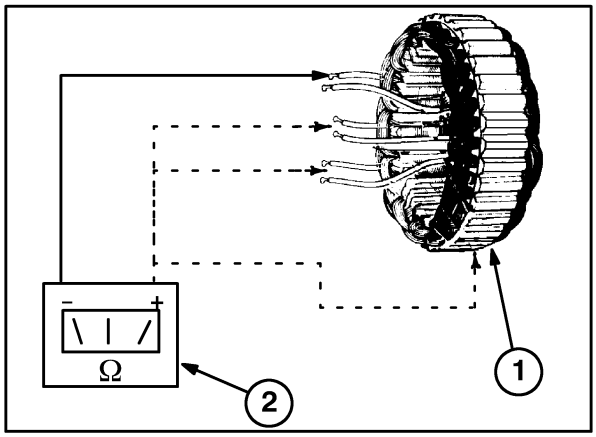

129

Stator Test – Insulation
55 Amp Alternator

With reference to Figure 130

1. Check the insulation of each winding to the alternator casing. There should be no continuity between the winding and the casing. If any ohmmeter(2) reading other than open circuit is indicated it will be necessary to replace the stator(1) assembly.

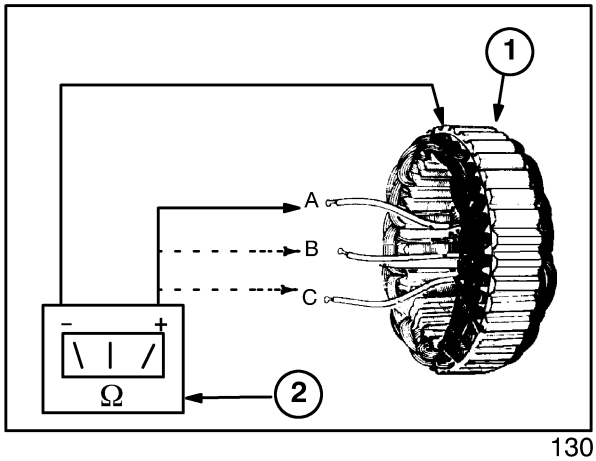

130

Rotor Test

Prior to performing component tests on the rotor the following slip ring inspection should be carried out.

1. Ensure the slip rings are clean and smooth. If necessary the slip rings may be cleaned with a petrol moistened cloth. If the slip rings are burnt and require re-finishing use very fine glass paper (not emery cloth) and wipe clean.

NOTE: *Ensure the re-finishing glass paper is sufficiently fine to produce a highly polished slip ring surface otherwise excessive brush wear will occur.*

2. If the slip rings are excessively worn a new rotor must be installed.

Rotor Field winding Continuity

with reference to Figure 131

1. Connect an ohmmeter(3) between the two slip rings(2). The resistance should read 2.6 ohms at 20°C.

If the resistance is outside of the specification renew the rotor(1).

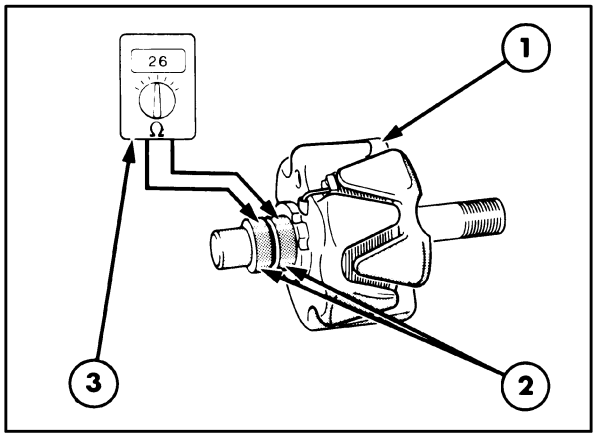

131

Rotor Field Winding Insulation

With reference to Figure 132.

1. Using an ohmmeter(3) test between each of the slip rings(2) and the rotor poles(1). An infinity reading should be indicated in each case. If any resistance reading is indicated the rotor assembly must be replaced.

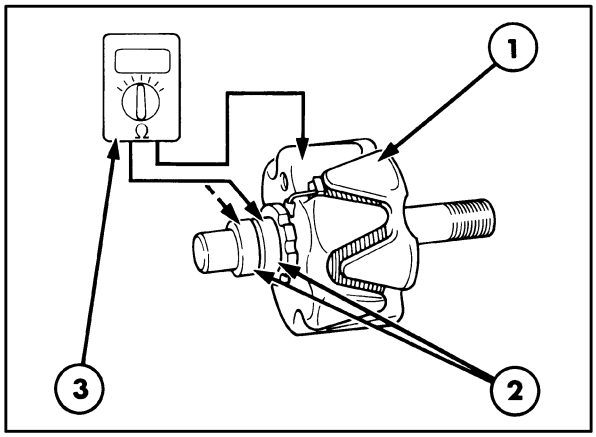

132

INSPECTION AND REPAIR

1. Inspect the rotor poles and stator for signs of rubbing. Areas of rubbing indicates possible worn bearings, misaligned housings or a bent rotor assembly shaft.

NOTE: *Both end bearings of the 100 Amp alternator and the front bearing of the 55 Amp alternator are not serviced separately. It will be necessary to either obtain a new rectifier and housing or stator assembly to renew worn bearings.*

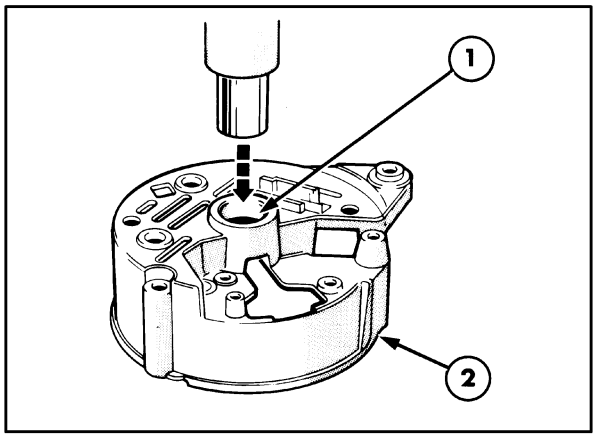

133

2. Inspect the roller bearing(1) of the 55 Amp alternator located in the rear (slip ring) end bracket(2) for wear and damage

3. If bearing replacement is necessary support the housing (rear end bracket) and using a suitable size mandrel carefully drive out the bearing, Figure 133.

4. Clean and examine all components.

5. Press the new bearing(2) into the housing(1). The bearing should be positioned .020-.028in (0.50-0.70mm) proud of the inner face of the bearing boss as shown at item (3), Figure 134.

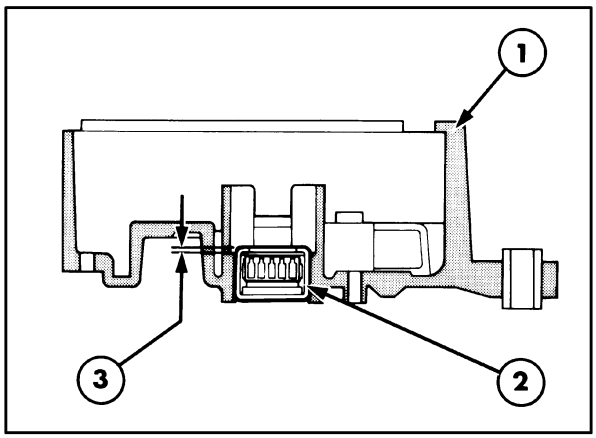

134

RE-ASSEMBLY

1. Re-assembly of the alternator follows the disassembly procedure in reverse.

On reassembly of the 55 Amp alternator observe the following:

- To avoid misalignment of the end brackets, install the stator assembly in the drive end bracket then assemble the slip ring end bracket to the stator laminations.

INSTALLATION

1. Installation of the alternator is the removal procedure in reverse.

On installation observe the following:

- Ensure the battery ground (negative) cable is disconnected from the battery when installing the alternator.

- Adjust the alternator drive belt as previously described in this Chapter.

BATTERY

SPECIFICATIONS

	Standard
Capacity (Ampere hour at 20 hour rate)	107
Cold Cranking Ampere Rating	800
Voltage	12
Cells	6
Ground Terminal	Negative

DESCRIPTION AND OPERATION

All tractor models feature one 12 volt, negative ground, 'maintenance free' lead calcium (Pb-Ca) type batteries, of six cell construction.

NOTE: *'Maintenance Free' means that under normal charging conditions the battery does not loose water from the electrolyte. Conditions that may cause water loss include prolonged charging above 14.4volts where gassing occurs as it approaches full charge. This can be caused by a faulty charging system or boost/recovery charging equipment.*

The battery is mounted on the right hand side of the unit under the cab steps (with cab models) or under the platform on less cab models.

The battery has four major functions:

- To provide a source of current for starting, lighting and instrumentation.
- To help control the voltage in the electrical system.
- To furnish current when the electrical demands exceed the alternator output.
- To support quiescent loads from radio and micro processor memory.

The battery is constructed in such a manner that each cell contains positive and negative plates placed alternatively next to each other. Each positive plate is separated from a negative plate by a non-conducting porous envelope separator. If any of the positive plates should make contact with negative plates within a cell, the cell will short circuit and suffer irreparable damage. All of the positive plates are welded to a bus-bar, forming a positive terminal and all of the negative plates are welded to a similar bus-bar forming a negative terminal.

Each positive plate is composed of a lead grid with lead peroxide pasted into the grid openings. The negative plates are composed of a lead grid with spongy lead pasted into the grid openings.

The plates are submerged in a liquid electrolyte solution of diluted sulphuric acid.

REMOVAL AND INSTALLATION

Top Battery

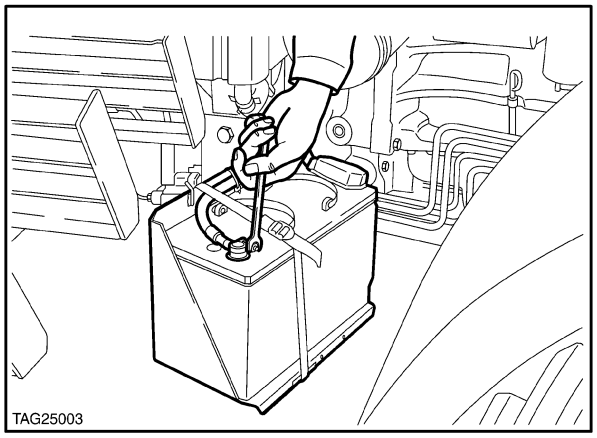

135

2. Lift up step (with cab) re-fit pin.

3. Remove battery tray lock pin and swing battery tray out.

4. Remove cover.

5. Remove battery securing strap.

6. Remove earth clamp and positive lead from the battery.

6. Using the lifting handles remove battery.

Installation

1. Installation of the battery is the removal procedure in reverse, observing the following points:

- Ensure that the battery is clean and dry and that the vent caps are fully installed. Smear the terminals with petroleum jelly (vaseline or equivalent), do not use conventional lubricating greases as these can promote electrolytic corrosion.

- Ensure the battery tray and clamps are clean and free from stones or small objects which may puncture the battery casing.

- Ensure that the battery terminal polarity is correct and that the terminal connections are sufficiently tight, but not overtightened.

- The radio, if fitted, will lose its stored information and will require re-programming. It should be noted that on models with electronic instrument panel and micro-processors, that these components will not lose their memories, i.e, electronic draft control and transmission calibrations will not be affected.

BATTERY MAINTENANCE AND TESTS

Specific Gravity

The specific gravity of the battery electrolyte indicates the state of charge. Fully charged the specific gravity of the electrolyte is 1.280 minimum at 25°C.

Alternatively the approximate state of charge can be measured by using an accurate digital volt meter (+/- 0.01V) as follows:-

Less than	10.5V Battery un-serviceable*
Less than	11.8V Battery discharged
Less than	12.3V Battery 1/2 charged
Better than	12.6V Battery fully charged

* See note under tests for possible recovery of a mildly sulphated battery.

Battery voltage to be taken with the battery unloaded and:-
A) After the battery has rested unloaded for at least 4 hours.
B) If the vehicle has recently run or battery has recently been charged, switch on headlamps for 2 minutes.

When a battery discharges, sulphuric acid in the electrolyte combines chemically with the plates and this action lowers the specific gravity of the solution.

A battery hydrometer will determine the specific gravity of the electrolyte in a cell and the amount of unused sulphuric acid in the solution is a measure of the degree of charge of that cell.

The lower the temperature at which a battery is required to operate, the more necessary it is that the battery is maintained in a fully charged condition. For example a battery with a low specific gravity of 1.225 at 27°C (80°F) will operate the starting motor at warm ambient temperatures but may not, due to lower battery efficiency at a low temperature.

Table 1 shows the effect of temperature on the efficiency of a typical battery.

Table 1

Temperature	Efficiency of a Fully Charged Battery
25.0°C (77.0°F)	100%
-4.5°C (23.9°F)	82%
-24.0°C (-11.2°F)	64%
-27.5°C (-17.5°F)	58%
-31.0°C (-23.8°C)	50%
-34.5°C (-30.1°C)	40%
-37.5°C (-35.5°C)	33%

Maximum battery life will be obtained if the correct care and periodic inspection is given. It is important that output capacity should not be exceeded by constant and excessive overloading and that charging requirements are maintained.

Servicing The Battery

WARNING

Batteries contain sulphuric acid and during charging generate a highly explosive mixture of hydrogen and oxygen gases.

- *Never use equipment that generates flames or sparks in order to control electrolyte level*
- *Do not remove the battery cover plugs without protection for eyes and hands.*

When servicing a battery the following steps should be observed:

1. Maintain the electrolyte to the recommended level of 17 mm (0.67 in.) above the plates. If this is not observed the acid will reach a high concentration that will damage the separators and impair the performance of the plates.

2. Use only distilled or de-mineralised water, do not overfill and never use tap water or water from a rain barrel or other source.

3. Always keep the battery at least 75% charged otherwise the plates will become sulphated and loss of efficiency will result with possible damage from freezing at low temperatures.

4. Avoid overcharging the battery as excessive charging will create high internal heat that will cause plate grid deterioration and produce water loss.

5. When fast charging ensure the battery temperature does not exceed 50°C.

6. Do not add sulphuric acid to a cell unless the electrolyte has been lost through spilling. Before replenishing ensure the solution is at the correct specific gravity. A slow charge is the only method to be employed to fully charge a battery. A high rate charger can be used to quickly boost the battery capacity but this must be followed by a slow charge rate to bring the battery to full capacity.

Dry Charged Batteries

1. Remove the battery cell vent plugs.
2. Fill each cell to the recommended level with electrolyte of 1.260 specific gravity.

Dry charged batteries must be prepared for service as follows:

NOTE: *The electrolyte must be diluted sulphuric acid preferably at a temperature of 21°-32°C (70°-90°F).*

3. After filling, allow the battery to stand for 15 minutes then re-check the electrolyte level and top up if necessary.
4. Charge the battery for 4 hours at a rate of 5-8 amperes and check that all cells are gassing freely.
5. Install the battery cell vent plugs.

Charging The Battery

Before charging a battery:

1. Thoroughly clean the battery casing and cell covers with dilute ammonia or hot water and clean the terminals.
2. Check the level of the electrolyte in each cell and, if below plates, add distilled water to bring above plate level.

Normal (Top-up) Charging

1. With a slow charger use a rate of 3 to 6 amperes for the time necessary to bring the battery to full charge. This may take 36 hours or more if the battery is heavily discharged. A severely sulphated battery might not accept a charge. When the battery is fully charged the cells will gas freely and the specific gravity will remain constant. Remove the charger after three consecutive hydrometer readings taken at hourly intervals indicate that the specific gravity has stopped rising.
7. When using a fast or high rate of charge carefully follow the manufacturers instructions. High rate charging raises the temperature of the electrolyte and unless the charger is equipped with an automatic time or temperature device, the electrolyte temperature could exceed 50°C , which may cause violent battery gassing and damage to internal components.
8. Re-check the level of electrolyte in each cell and add distilled water as necessary.

⚠ WARNING ⚠

When a battery is being charged an explosive gas is produced. Do not smoke or use an exposed flame when checking the electrolyte level and ensure the charger is switched off before connecting or disconnecting to avoid sparks which could ignite the gas.

Recharging Deeply Discharged Batteries

The recommended method to recharge a maintenance free Pb-Ca battery is to use a constant voltage charger. For deeply discharged batteries a 48 hours charging period at 16volts is recommended, with current limitation, (47.5A for 107Ah).

This system is self regulating: high current is delivered at the beginning (when battery voltage is low), lower and lower current is then absorbed when battery reaches full charge (and its voltage is high).

If only constant current chargers are available it is recommended to use the current levels and times shown Table 2 below. The figures are intended for deeply discharged batteries. If the battery is only 50% discharged use one half of the time listed (slow charge programs). For other states of discharge reduce proportionally the time of charge. Whenever possible use the slowest charge program to increase the battery's life.

If when charging the battery, violent gassing or spewing of electrolyte occurs, or the battery case feels hot (50°C or greater), reduce or temporarily halt charging to avoid damaging the battery.

Table 2	Battery Type
	107Ah (800 cca)
Slow Charge Programs	25hrs at 5A 12.5hrs at 10A
Fast charge Program (emergencies only)	7hrs at 18A

Tests

Before commencing battery tests check the battery for clogged vents, corrosion, raised vent plugs or a cracked case.

Test equipment required:

- Hydrometer
- Battery starter tester (High rate discharge tester)
- Thermometer
- Battery Charger

Specific Gravity: This test will determine the state of battery charge.

1. With the float in the vertical position take the reading.

2. Adjust the hydrometer reading for electrolyte temperature variations by subtracting 4 points (0.004 specific gravity) for every 5.5°C (10°F) below the temperature at which the hydrometer is calibrated and by adding 4 points (0.004 specific gravity) for every 5.5°C (10°F) above this temperature.

The following examples are calculated using a hydrometer calibrated at 30°C (86°F).

Example 1:
Temperature below 30°C (86°F)

Electrolyte temperature	19°C (66°F)
Hydrometer reading	1.270
Subtract $\frac{11.0}{5.5}$ x 0.004	0.008
Corrected specific gravity =	1.262

Example 2:
Temperature above 30°C (86°F)

Electrolyte temperature	40°C (104°F)
Hydrometer reading	1.220
Add $\frac{10.0}{5.5}$ x 0.004	0.007
Corrected specific gravity =	1.227

3. Use the following table to determine the state of charge.

State of Charge	Corrected Specific Gravity @15°C	Corrected Specific Gravity @25°C	Average Battery Voltage
100%	1.295	1.287	12.76
75%	1.253	1.246	12.52
50%	1.217	1.210	12.30
25%	1.177	1.170	12.06
Discharged	1.137	1.130	11.84

NOTE: *Specific gravity should not vary more than 0.025 points between cells.*

4. If the specific gravity is 1.280 or more the battery is fully charged and in good operating condition.
5. Should the corrected specific gravity be below 1.280, charge the battery and inspect the charging system to determine the cause of the low battery charge.

NOTE: *If distilled water has recently been added the battery should be recharged for a short period otherwise accurate hydrometer readings will not be obtained.*

If the battery has been charged under static conditions, denser electrolyte will accumulate at the bottom of the cells. The battery should be shaken periodically to mix the electrolyte, this will improve the charge rate and provide a more accurate hydrometer reading when tested.

Performance Test: The performance test is to determine if the battery has adequate capacity to turn the engine. The voltage reading obtained is used to determine the battery condition. Prior to testing, ensure the electrolyte level is correct and the open circuit voltage is 12.5V or more. The battery may be tested on or off the tractor.

1. Set the current control switch of the battery starter tester (high rate discharge tester) to the 'off' position and the voltage selector switch equal to, or slightly higher than, the rated battery voltage. Connect the tester positive leads to the battery positive terminal and the negative leads to the negative battery terminal.

2. Turn the current control knob until the ammeter reading is half the CCA rating of the battery and take the voltage reading.

- If the reading is 9.6 volts or more after 15 seconds, the battery has an acceptable output capacity and will readily accept a normal charge.

- If however the reading is below 9.6 volts, the battery is considered unsatisfactory for service and should be test charged as described below.

CAUTION: *Do not leave the high discharge load on the battery for periods longer than 15 seconds.*

Test Charging: This test is designed only for batteries that have failed the previous capacity test.

1. Attach the battery starter (high rate discharge tester) positive leads to the battery positive terminal and the negative leads to the battery negative terminal.

2. Connect the battery charger positive lead to the battery positive terminal and the negative lead to the battery negative terminal.

3. Turn the charger timer past a '3 minutes' charge indication and then back to the '3 minutes' mark.

4. Set the charging rate as close as possible to 40 amperes.

5. After 3 minutes at this fast charge take the voltmeter reading.

- If the total voltage is over 15.5 volts the battery is unsatisfactory and is probably sulphated or worn out and should be replaced.

NOTE: *A mildly sulphated battery can be recovered by using a multiple battery type charger, with an open circuit upper voltage limit of 50 volts. Owing to the high resistance of a sulphated battery, it will primarily require a high voltage setting to overcome the resistance of the sulphation. initially there may be no visible acceptance of the charge. After a few minutes of inactivity a small charge will be apparent, followed by a rapid increase in the charge rate. The charge rate must not exceed 14.0 amperes or the electrolyte temperature 50°C. When the ampere rate has stabilised, reset the volts until the charge rate is a steady 5 amperes. Continue at this rate until the electrolyte specific gravity stops rising at approximately 1.275–1.280 at 20°C (68°F), this can take up to 48 hours of charging. Stand the battery for 24 hours and then conduct the capacity test detailed previously.*

- If the total voltage is under 15.5 volts, test the specific gravity of each cell and re-charge the battery to the following scale:

Specific Gravity	Fast charge up to:
1.150 or less	60 minutes
1.151 to 1.175	45 minutes
1.176 to 1.200	30 minutes
1.201 to 1.225	15 minutes (Slow charge only)

NOTE: *When battery problems are experienced the fan belt tension and the complete charging system should be checked.*

Common Causes of Battery Failures

135 Internal open circuit.

136 Internal short circuit.

137 Loss of electrolyte.

138 Separation of active materials from grids.

139 Accumulation of sulphate crystals too large to disperse.

These failures are normally caused by the following:

135 Failure of inter cell components.

136 Excessive crystal growth may puncture the separators and cause short circuits.

137 Excessive over charging (charging system malfunction, boost/recovery techniques with high voltage, operation in very high temperatures.

138 Freezing of electrolyte.
A fully charged battery does not freeze until -65°C. A 50% charged battery freezes between -17°C and -27°C. Fully discharged electrolyte freezes at -3°C to -11°C.
Excessively high boost charging and gassing will also cause separation of active materials from the grids. Separation destroys the chemical function of the battery.

139 Crystal growth occurs whenever batteries are left discharged. High temperatures and extended discharged periods increase this condition. At room temperature after one week the battery is unlikely to recover on the vehicle. Recharge will require a higher constant voltage. After 3 weeks the battery will have suffered permanent degradation and the procedure detailed previously for charging a 'Deeply Discharged' battery should be followed.

When fully charged, batteries have a long shelf life. The lead calcium type battery self discharges at 3% per month. This means that it will take 16 months to drop to 50% charged. On the tractor the quiescent load is about 50mA. To predict rundown on a static vehicle this should be added as approximately 8Ah per week.

It is worth stressing that when cranking, if a battery starts to fade, it is beneficial to stop and allow two minutes for the battery to recover. The recovery time should be increased as the temperature decreases.

With the dual battery set up, an old battery should not be used with a new one. One battery will always fail first. If the battery has given the service life expected, change both batteries. If one has failed early, i.e, through manufacturing defect, then it is acceptable to replace just one battery.

HARNESSES AND CONNECTORS

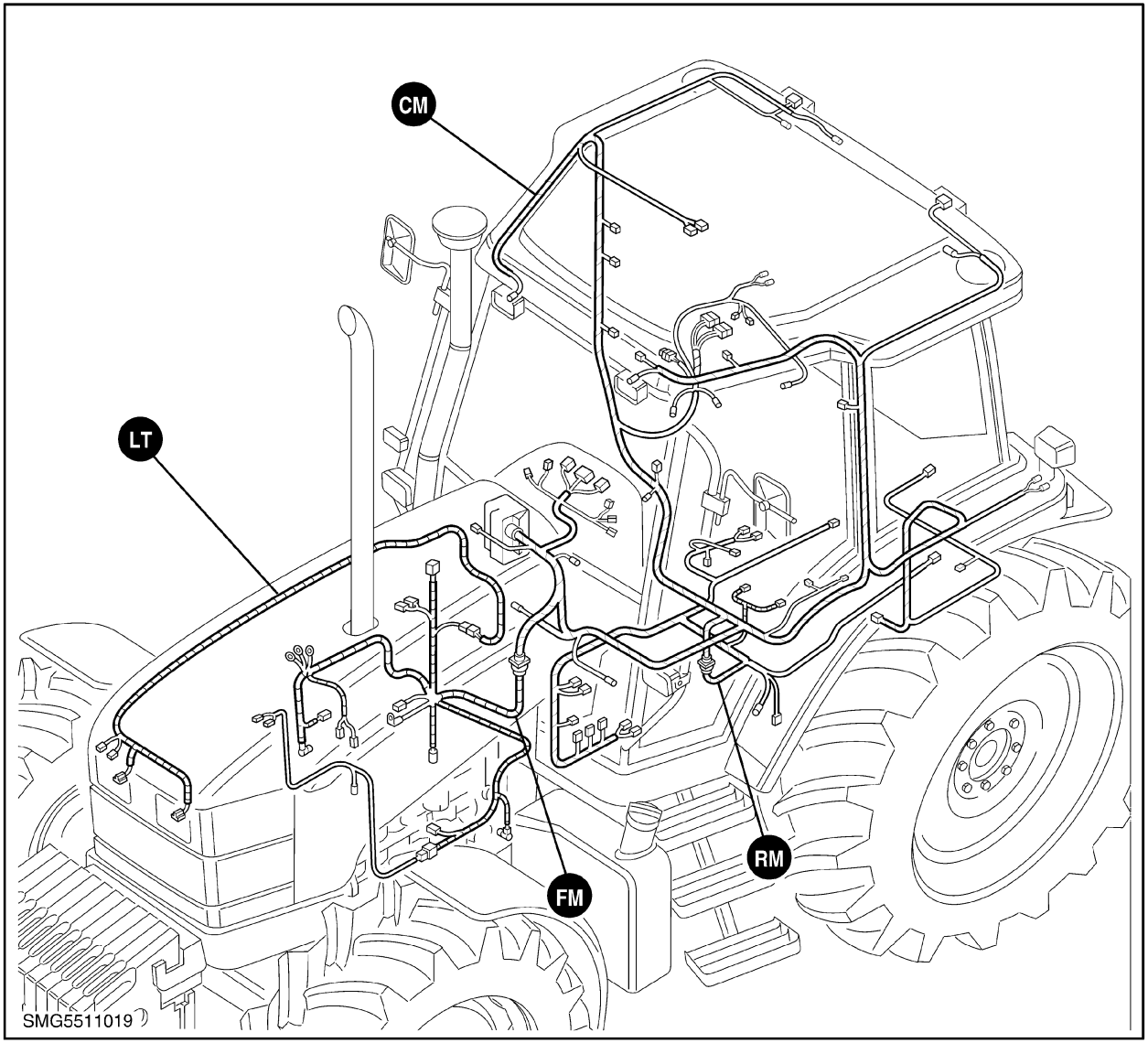

There are Four Main Harnesses used on Cabbed Tractors.

LT – Lighting
FM – Front Main (Engine Harness)
RM – Rear Main (Chassis Harness)
CM – Cab Main

Harness to Harness Connector location

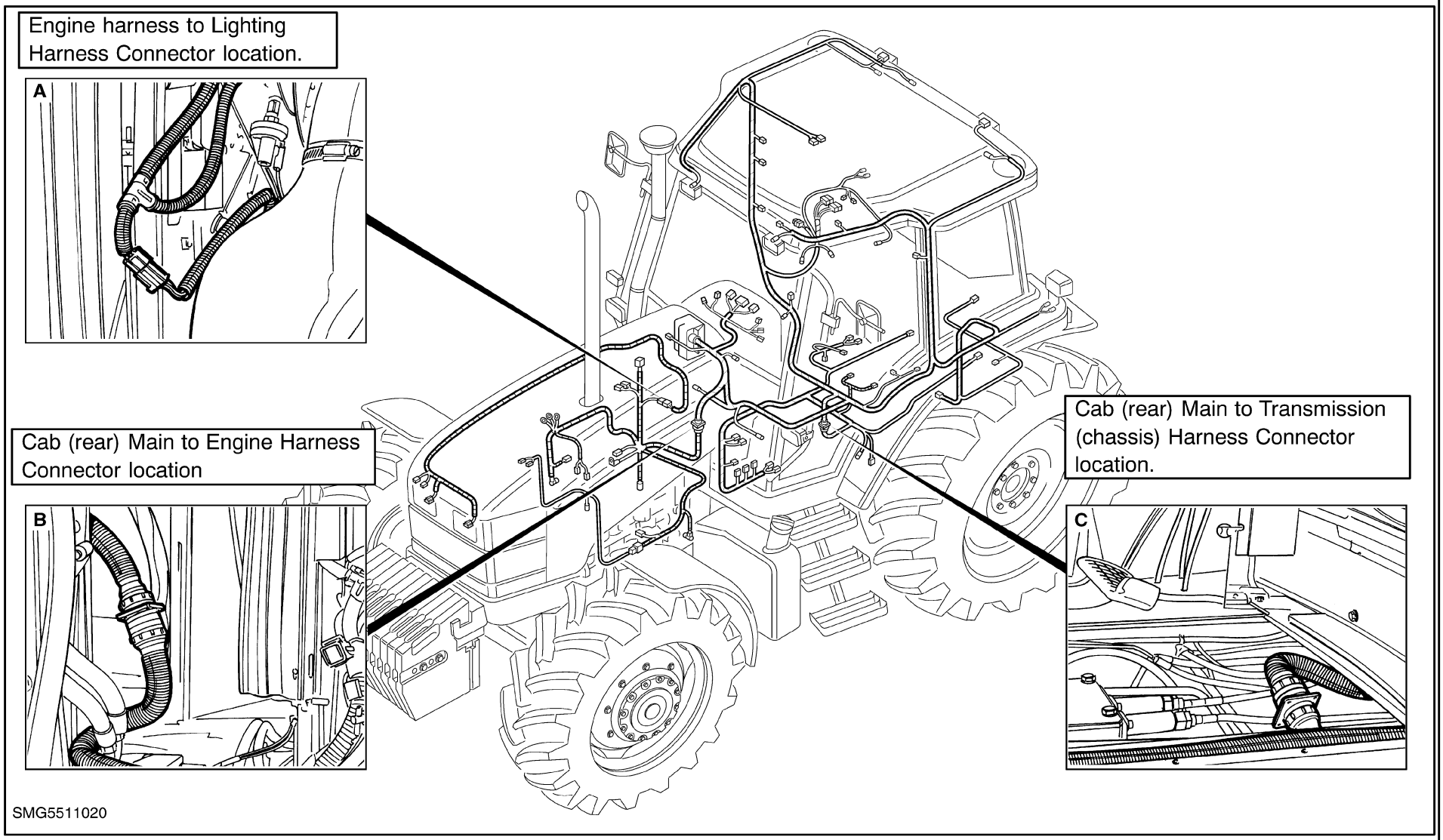

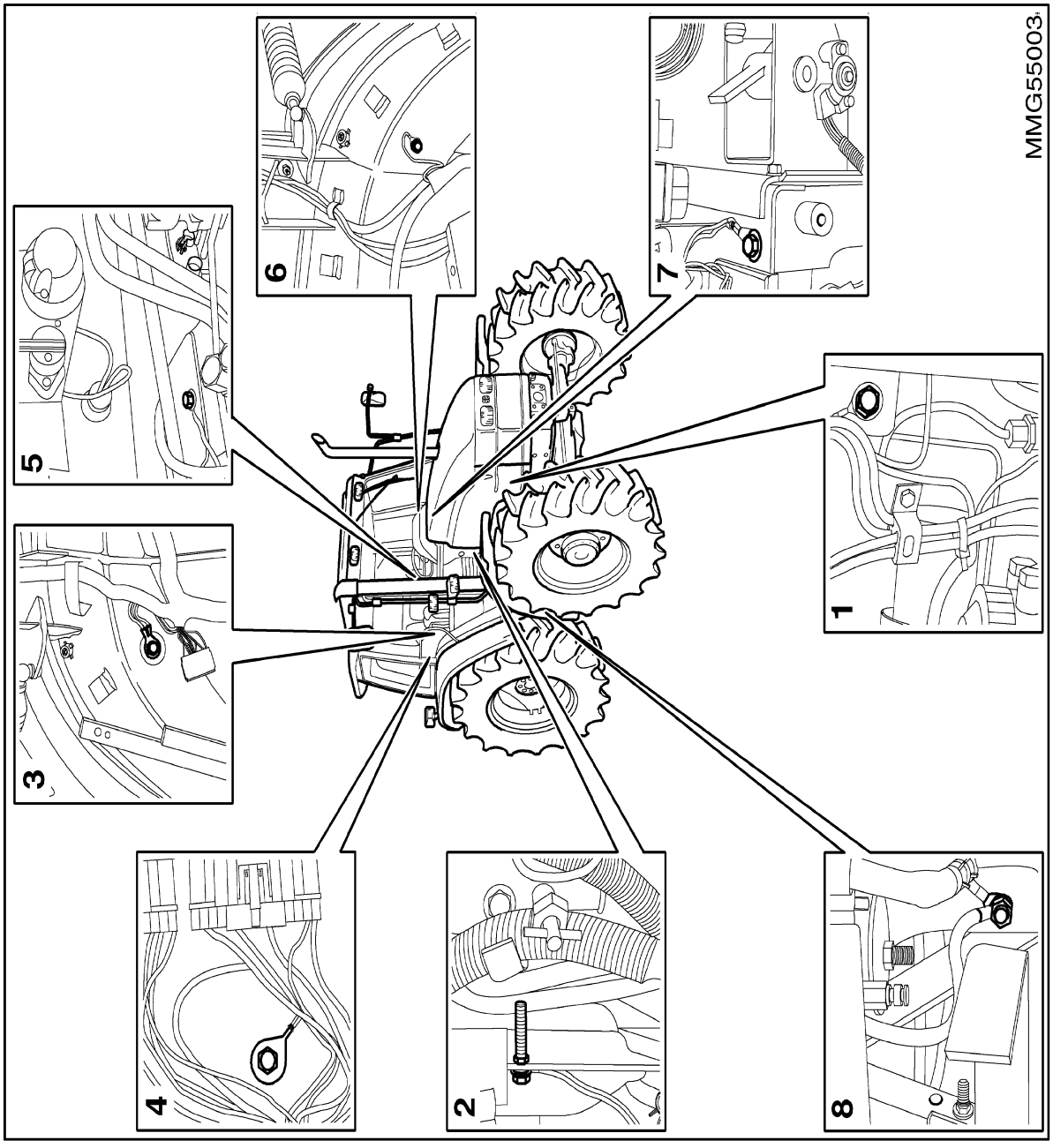

Earth (Ground) Location Points

LIGHTING HARNESS CONNECTORS

Connector No.	Component	Harness
C007	Brake Fluid Reservoir Level Switch	LT
C056	Headlamp Harness	LT
C057	Horn	LT
C059	Right Hand Headlamp	LT
C060	Left Hand Headlamp	LT

Connector No.	Component	Harness

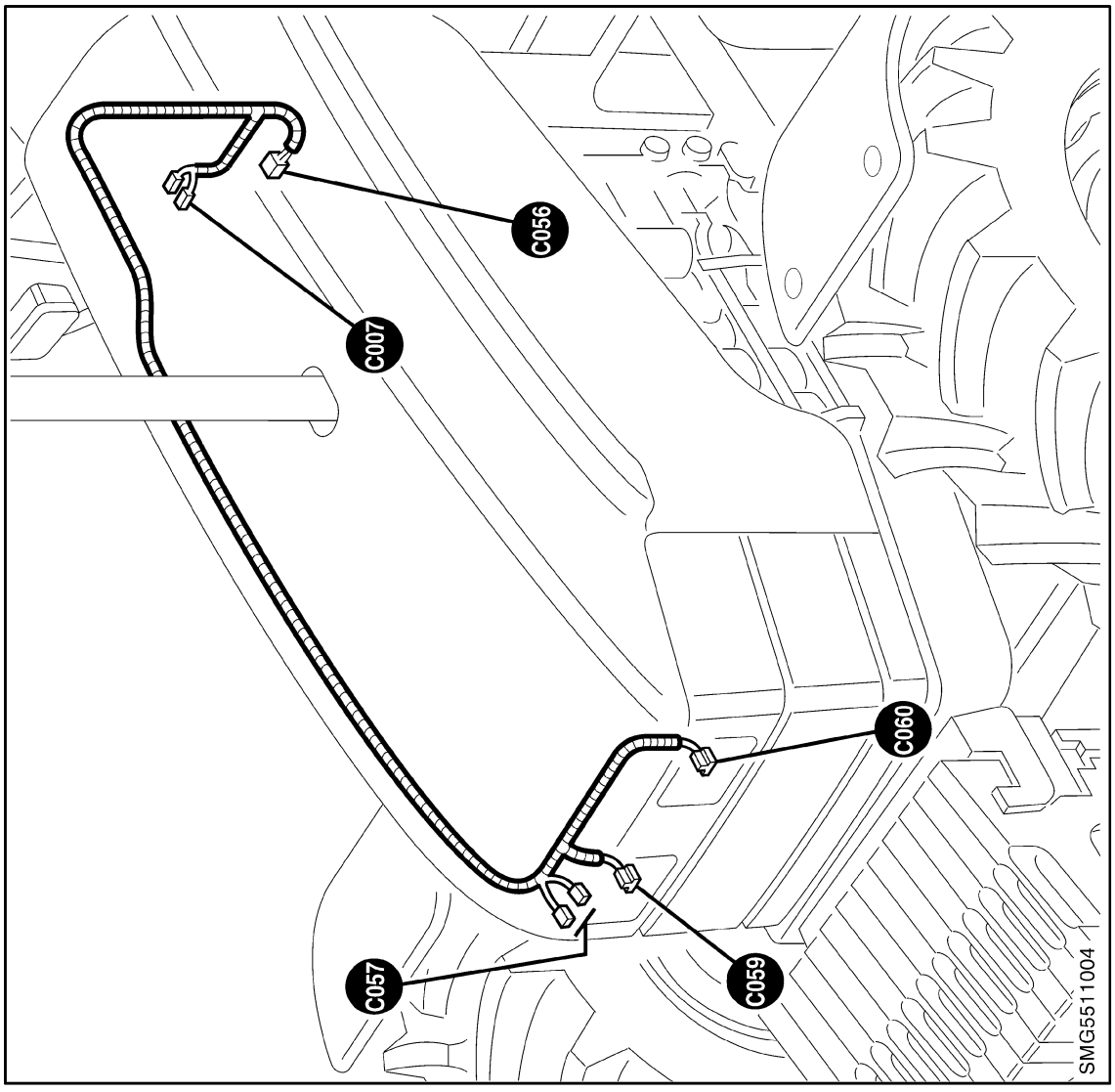
C056
C007
C060
C057
C059
SMG5511004

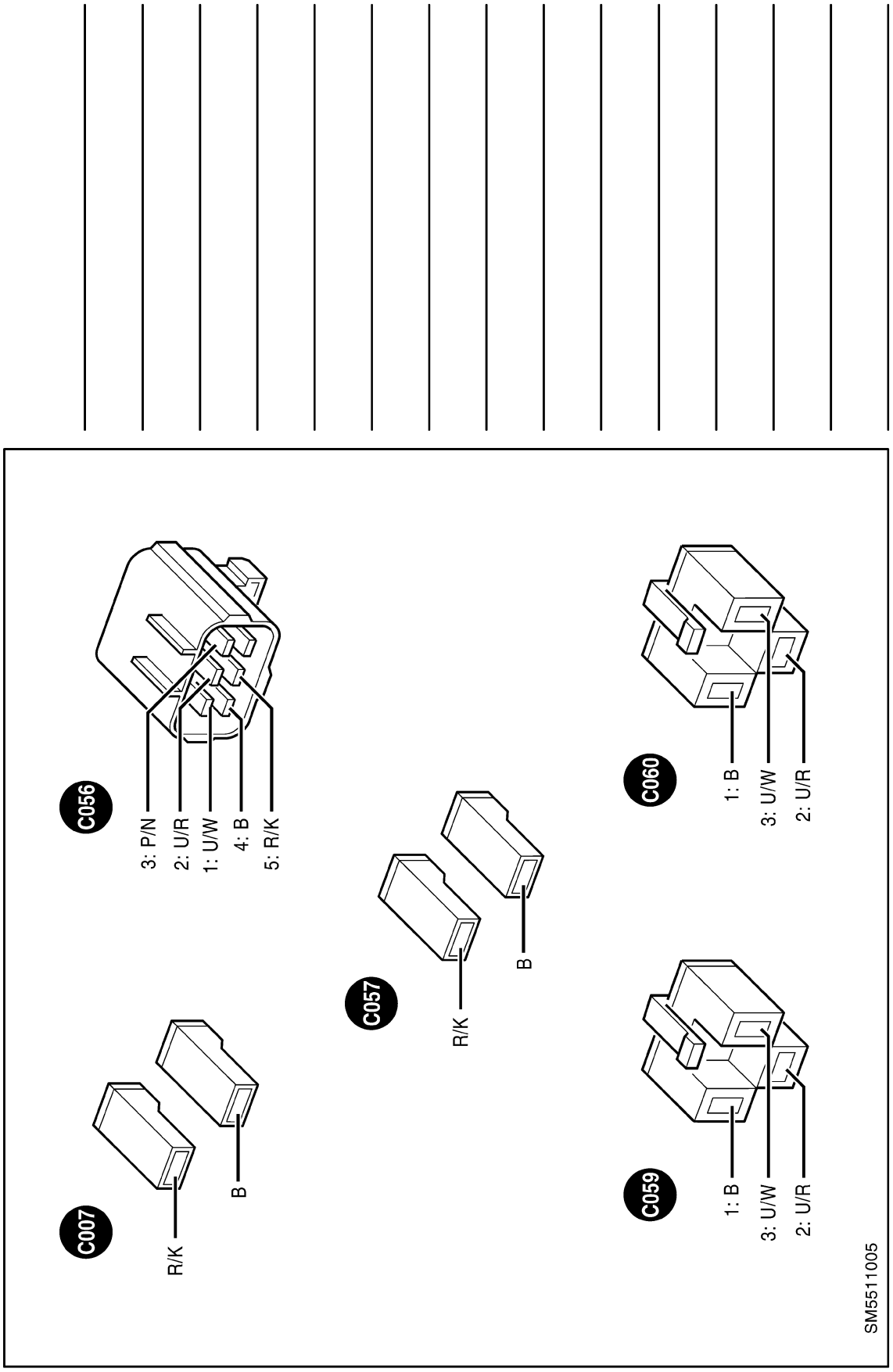
C056
3: P/N
2: U/R
1: U/W
4: B
5: R/K
C007
R/K
B
C057
R/K
B
C060
1: B
3: U/W
2: U/R
C059
1: B
3: U/W
2: U/R
SM5511005

ENGINE HARNESS CONNECTORS

Connector No.	Component	Harness	Connector No.	Component	Harness
C001	Front Main Bulkhead Connector M1	FM			
C003	Oil Pressure Sender	FM			
C004	Oil Pressure Switch	FM			
C005	Starter Relay	FM			
C006	Starter Solenoid	FM			
C009	Vacuum Switch	FM			
C010	Air-Con compressor	FM			
C011	Air-Con Hi-Lo Switch	FM			
C012	Temperature Sender	FM			
C013	Alternator	FM			
C015	Fuel Shut-Off Solenoid	FM			
C016	Fuel Pump	FM			
C018	Thermostart	FM			
C056	Lighting Harness Connector	FM			
C068	Radar Gun	FM			
C224	Air-Con Extension Harness	FM			
C229	Fuel Pump Cold Advance Unit	FM			
C230	Fuel Pump Cold Advance Temp Switch	FM			

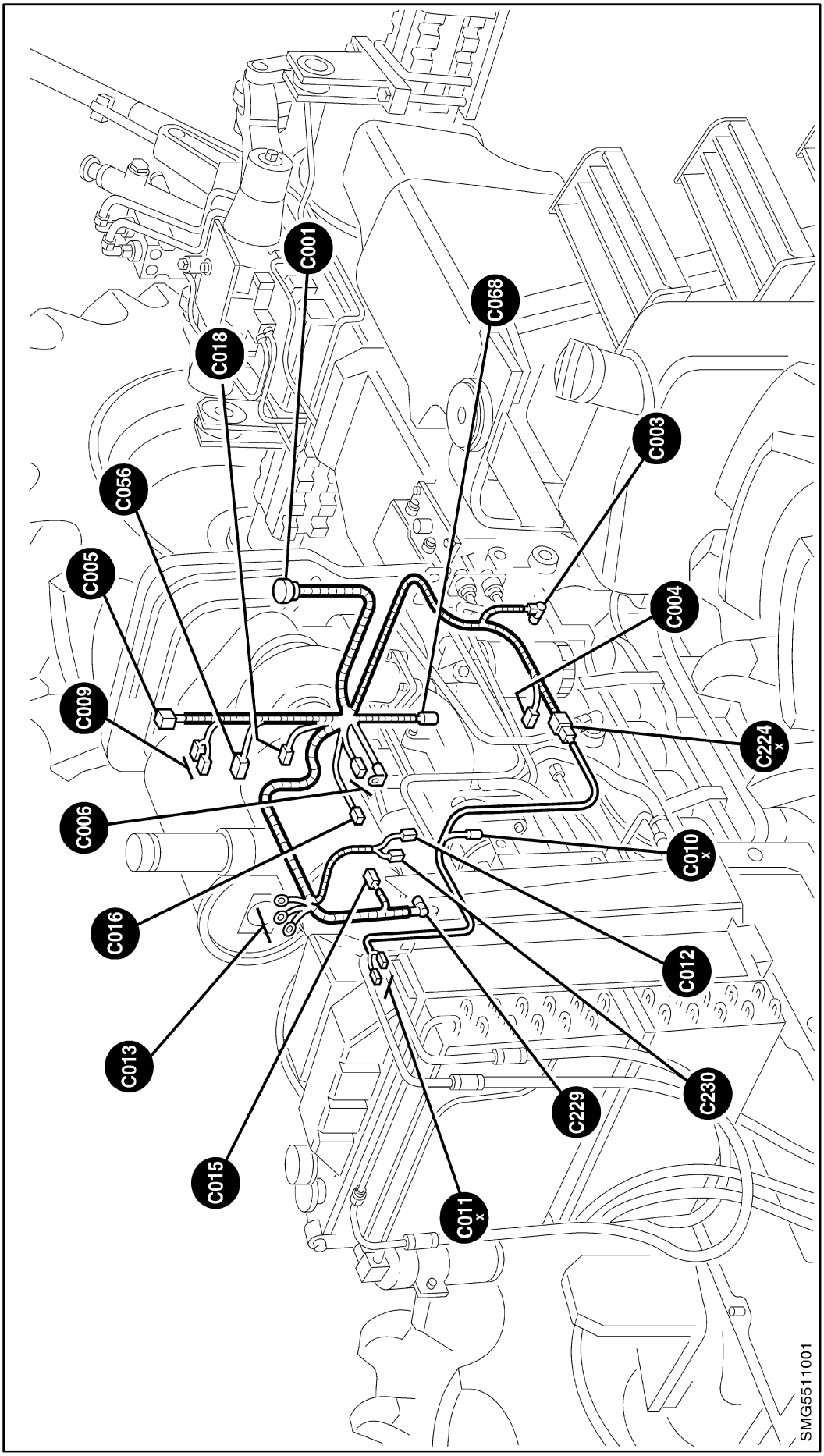
C001
C068
C018
C003
C056
C005
C004
C009
C224x
C006
C010x
C016
C012
C013
C230
C229
C015
C011x
SMG5511001

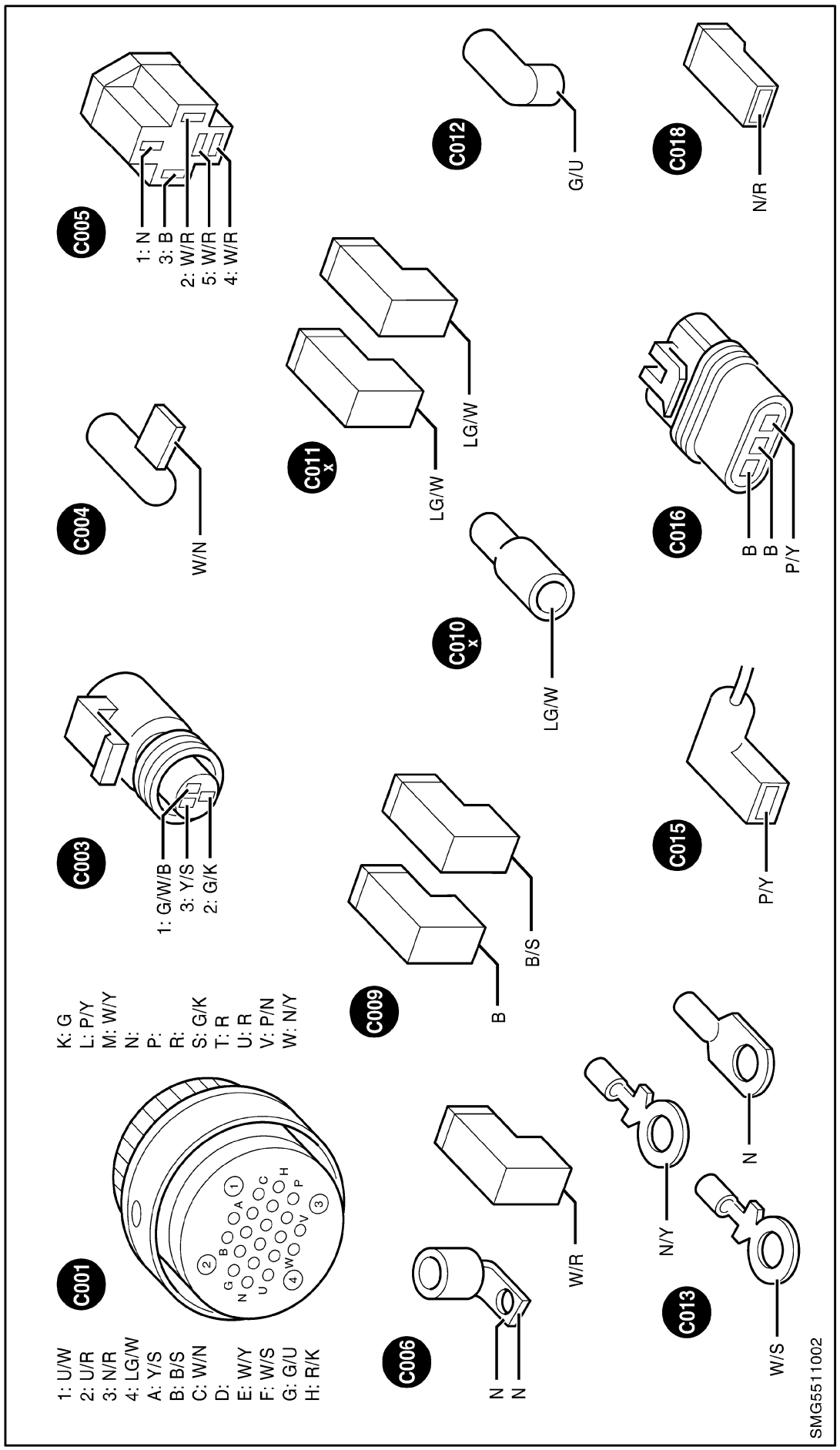
C001
1: U/W
2: U/R
3: N/R
4: LG/W
A: Y/S
B: B/S
C: W/N
D:
E: W/Y
F: W/S
G: G/U
H: R/K
K: G
L: P/Y
M: W/Y
N:
P:
R:
S: G/K
T: R
U: R
V: P/N
W: N/Y
C003
1: G/W/B
3: Y/S
2: G/K
C004
W/N
C005
1: N
3: B
2: W/R
5: W/R
4: W/R
C006
N
N
C009
B
B/S
C010
x
LG/W
C011
x
LG/W
LG/W
C012
G/U
C013
W/R
N/Y
N
W/S
C015
P/Y
C016
B
B
P/Y
C018
N/R
SMG5511002

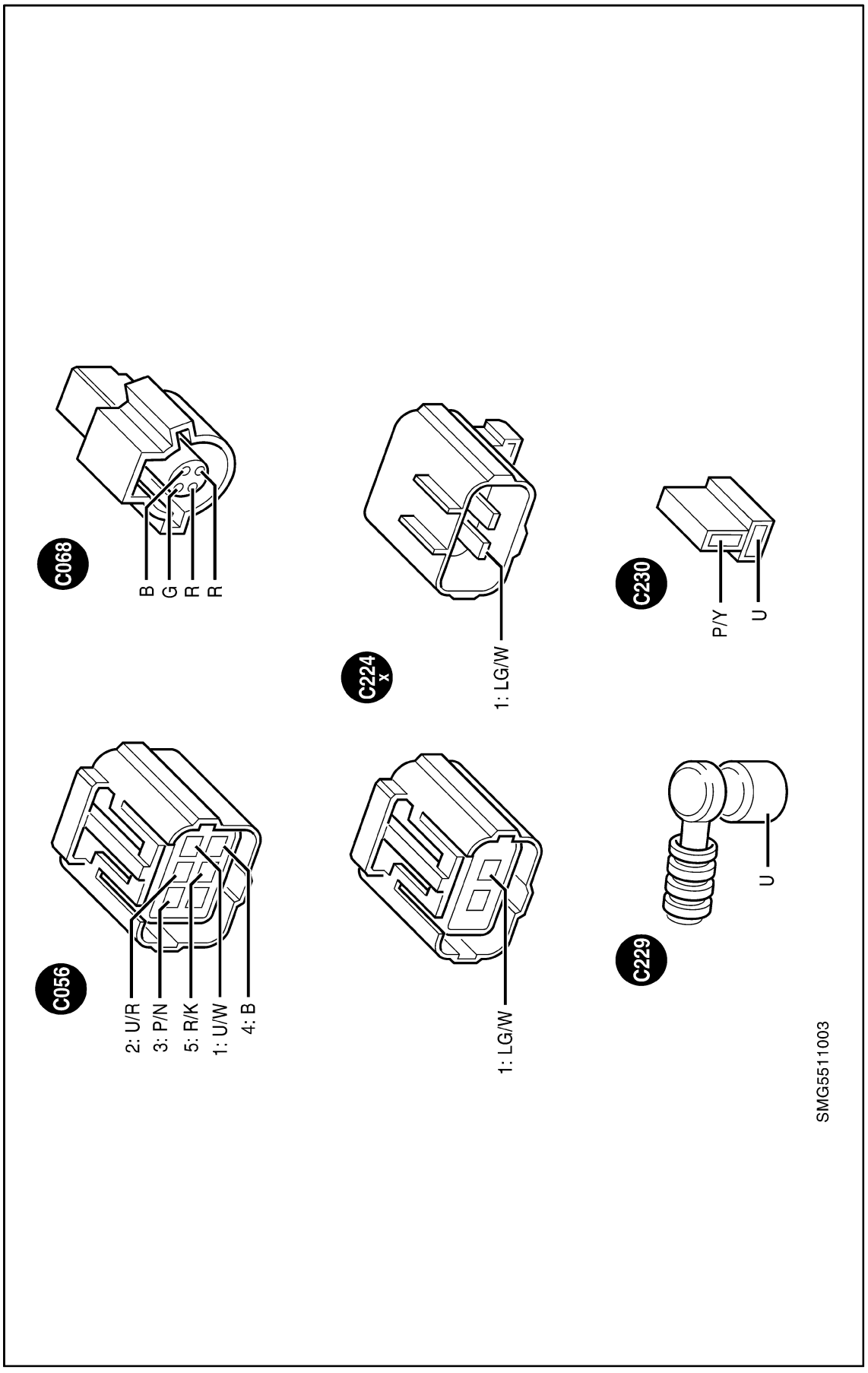
C068
B
G
R
R
C224
x
1: LG/W
C230
P/Y
U
C056
2: U/R
3: P/N
5: R/K
1: U/W
4: B
1: LG/W
C229
U
SMG5511003

CHASSIS HARNESS CONNECTORS (16x16 Electroshift models)

Connector No.	Component	Harness
C020	Rear Main Extension Connector	RM
C021	Creeper Engaged Switch	RM
C022	Fuel Tank Sender	RM
C023	Transmission Oil Temp Sender	RM
C025	Clutch 4	RM
C026	Clutch 3	RM
C027	Clutch 2	RM
C028	Clutch 1	RM
C034	Four Wheel Drive Solenoid	RM
C036	Pressure Switch	RM
C041	PTO Solenoid	RM
C042	Diff Lock Solenoid	RM
C043	Diff Lock Switch	RM
C046	Axle Speed Sensor	RM
C047	Left Hand Draft Pin	RM
C048	Right Hand Draft Pin	RM
C052	Rockshaft Potentiometer	RM
C053	Hydraulic Remote Valve Solenoid	RM
C154	HPL Filter Vacuum Switch	RM
C164	Trans. Switch 1-4 range	RM
C165	Trans. Switch 5-8 range	RM
C166	Low Range Switch	RM
C167	High Range Switch	RM
C171	Oil temperature Switch	RM
C172	Oil temperature Switch	RM
C173	Low Charge Pressure Switch	RM
C174	Steering Pressure Switch	RM
C176	Start inhibitor Switch	RM
C217	EDC Raise Solenoid	RM
C218	EDC Lower Solenoid	RM
C222	Creeper Solenoid	RM

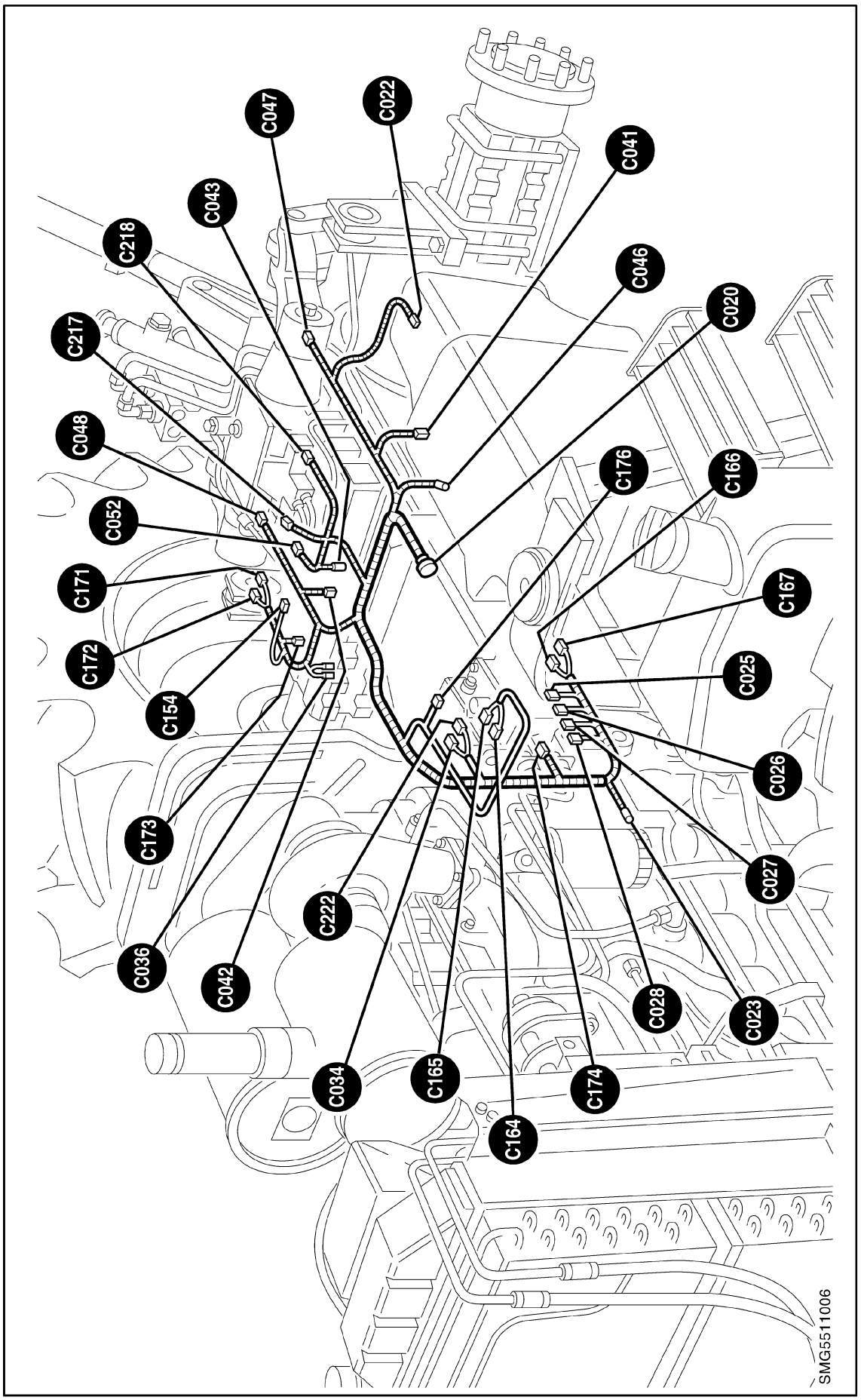
C047
C022
C041
C043
C218
C046
C020
C217
C048
C176
C166
C052
C171
C167
C172
C025
C154
C026
C173
C027
C222
C036
C042
C028
C023
C034
C165
C174
C164
SMG5511006

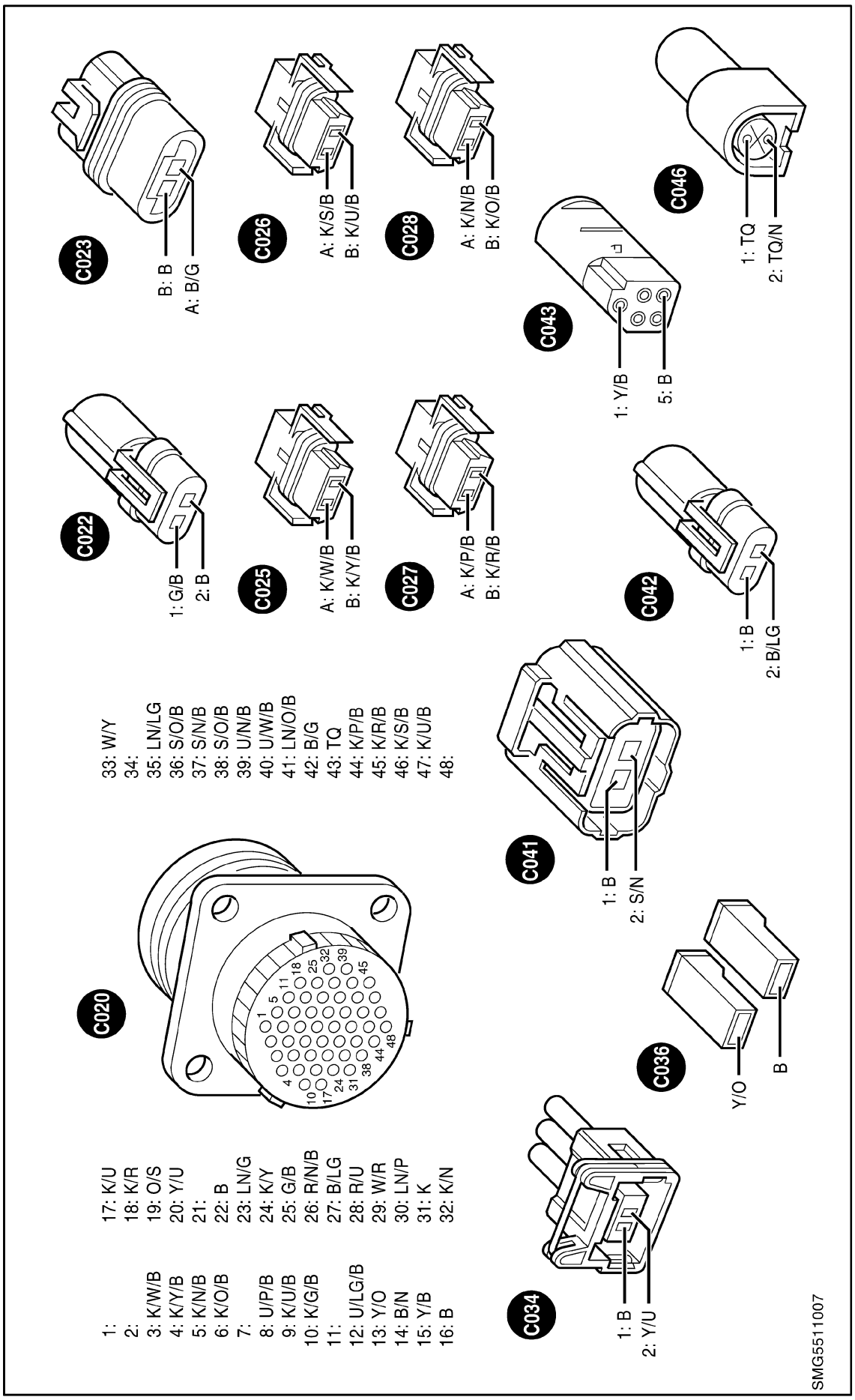
C020
1:
2:
3: K/W/B
4: K/Y/B
5: K/N/B
6: K/O/B
7:
8: U/P/B
9: K/U/B
10: K/G/B
11:
12: U/LG/B
13: Y/O
14: B/N
15: Y/B
16: B
17: K/U
18: K/R
19: O/S
20: Y/U
21:
22: B
23: LN/G
24: K/Y
25: G/B
26: R/N/B
27: B/LG
28: R/U
29: W/R
30: LN/P
31: K
32: K/N
33: W/Y
34:
35: LN/LG
36: S/O/B
37: S/N/B
38: S/O/B
39: U/N/B
40: U/W/B
41: LN/O/B
42: B/G
43: TQ
44: K/P/B
45: K/R/B
46: K/S/B
47: K/U/B
48:
C022
1: G/B
2: B
C023
B: B
A: B/G
C025
A: K/W/B
B: K/Y/B
C026
A: K/S/B
B: K/U/B
C027
A: K/P/B
B: K/R/B
C028
A: K/N/B
B: K/O/B
C034
1: B
2: Y/U
C036
Y/O
B
C041
1: B
2: S/N
C042
1: B
2: B/LG
C043
1: Y/B
5: B
C046
1: TQ
2: TQ/N
SMG5511007

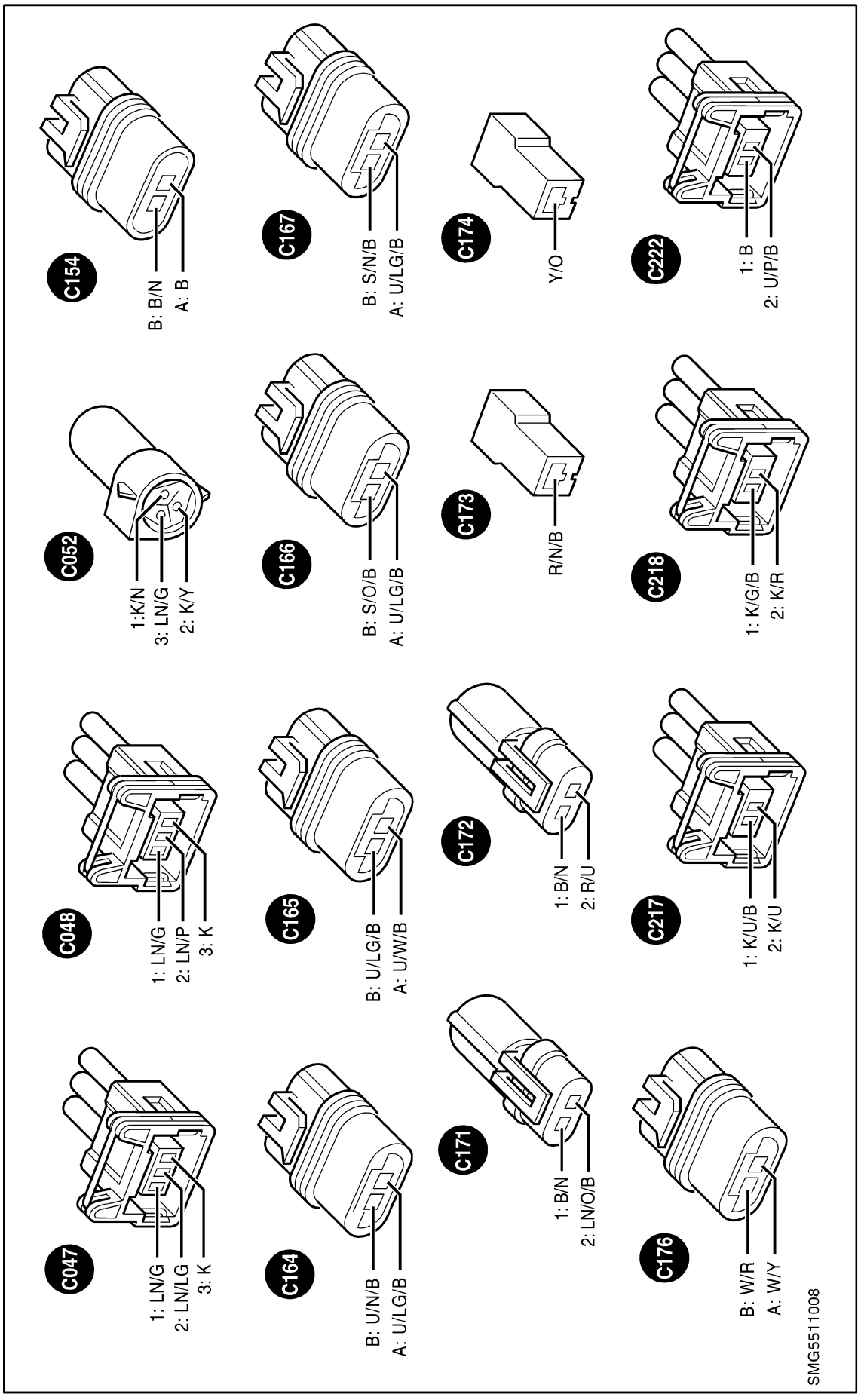
C154
B: B/N
A: B
C167
B: S/N/B
A: U/LG/B
C174
Y/O
C222
1: B
2: U/P/B
C052
1:K/N
3: LN/G
2: K/Y
C166
B: S/O/B
A: U/LG/B
C173
R/N/B
C218
1: K/G/B
2: K/R
C048
1: LN/G
2: LN/P
3: K
C165
B: U/LG/B
A: U/W/B
C172
1: B/N
2: R/U
C217
1: K/U/B
2: K/U
C047
1: LN/G
2: LN/LG
3: K
C164
B: U/N/B
A: U/LG/B
C171
1: B/N
2: LN/O/B
C176
B: W/R
A: W/Y
SMG5511008

CHASSIS HARNESS CONNECTORS (24x24 Dual Command models)

Connector No.	Component	Harness
C020	Rear Main Extension Connector	RM
C022	Fuel Tank Sender	RM
C023	Transmission Oil Temp Sender	RM
C034	Four Wheel Drive Solenoid	RM
C036	Pressure Switch	RM
C041	PTO Solenoid	RM
C042	Diff Lock Solenoid	RM
C043	Diff Lock Switch	RM
C046	Axle Speed Sensor	RM
C047	Left Hand Draft Pin	RM
C048	Right Hand Draft Pin	RM
C052	Rockshaft Potentiometer	RM
C053	Hydraulic Remote Valve Solenoid	RM
C154	HPL Filter Vacuum Switch	RM
C161	Clutch A	RM
C162	Clutch B	RM
C163	Dump Solenoid	RM
C171	Oil temperature Switch	RM
C172	Oil temperature Switch	RM
C176	Start inhibitor Switch	RM
C177	Neutral Switch 3/4 Rail	RM
C178	Neutral Switch 1/2 Rail	RM
C197	Hi/Medium range Switch	RM
C217	EDC Raise Solenoid	RM
C218	EDC Lower Solenoid	RM

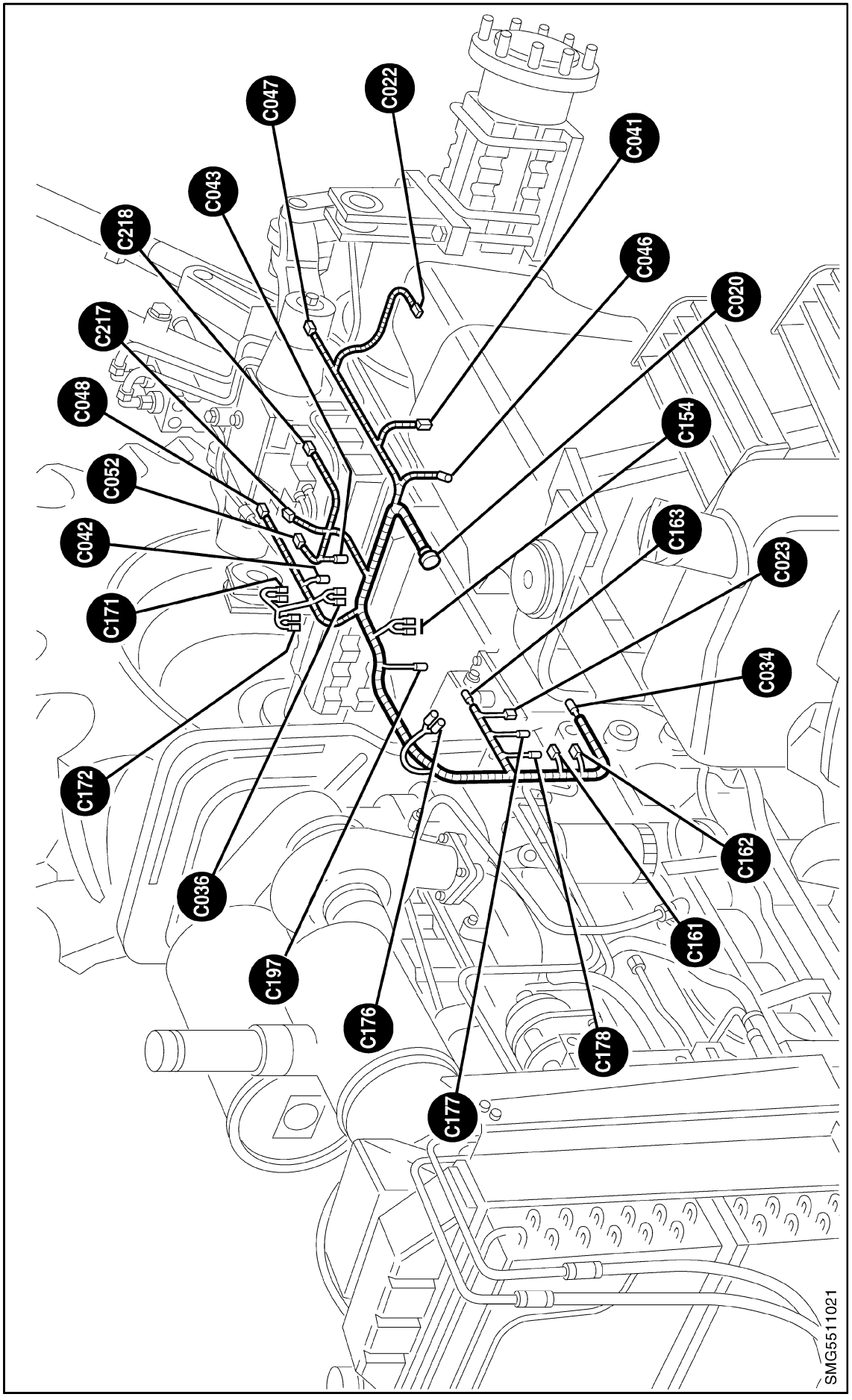
C047
C022
C041
C043
C218
C046
C020
C217
C154
C048
C052
C163
C042
C023
C171
C034
C172
C162
C036
C161
C197
C176
C178
C177
SMG5511021

C020

1:
2:
3: K/W/B
4: K/Y/B
5:
6:
7:
8:
9: K/U/B
10: K/G/B
11:
12: U/LG/B
13: Y/O
14: B/N
15: Y/B
16: B
17: K/U
18: K/R
19: O/S
20: Y/U
21:
22: B
23: LN/G
24: K/Y
25: G/B
26:
27: B/LG
28: R/U
29: W/R
30: LN/P
31: K
32: K/N
33: W/Y
34:
35: LN/LG
36: S/O/B
37:
38:
39: U/N/B
40:
41: LN/O/B
42: B/G
43: TQ
44: K/P/B
45: K/R/B
46: K/S/B
47: K/U/B
48:

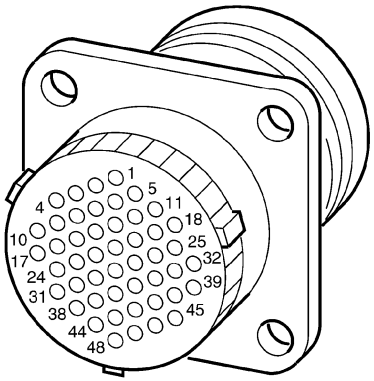

C022

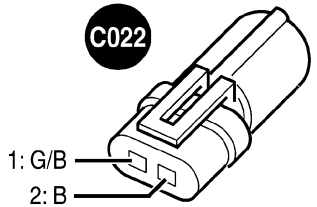

C023

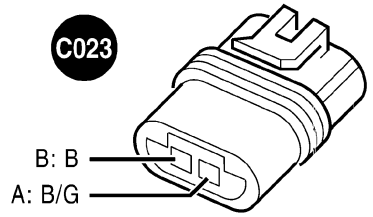

C034

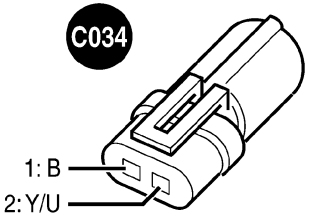

C036

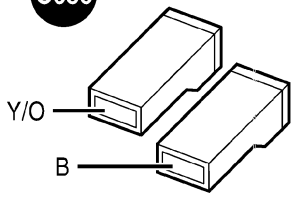

C041

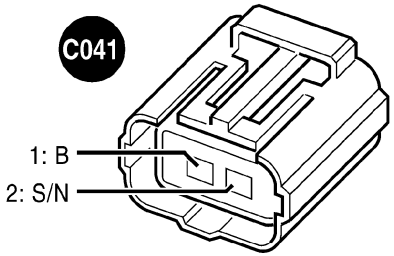

C042

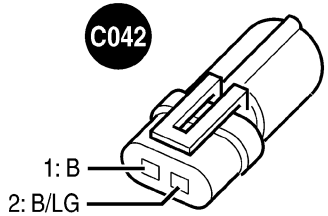

C043

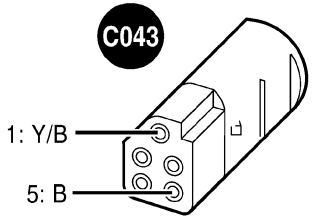

C046

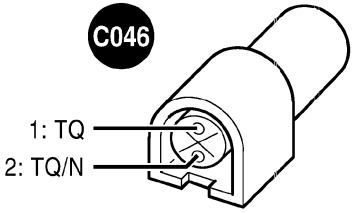

C047

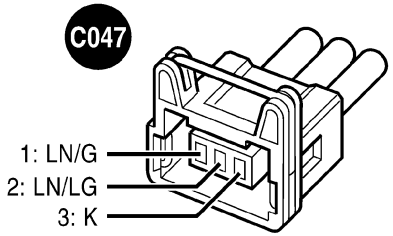

C048

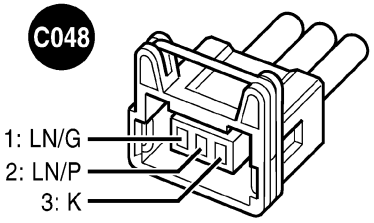

C052

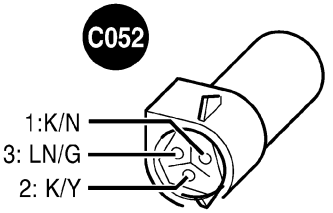

SMG5511022

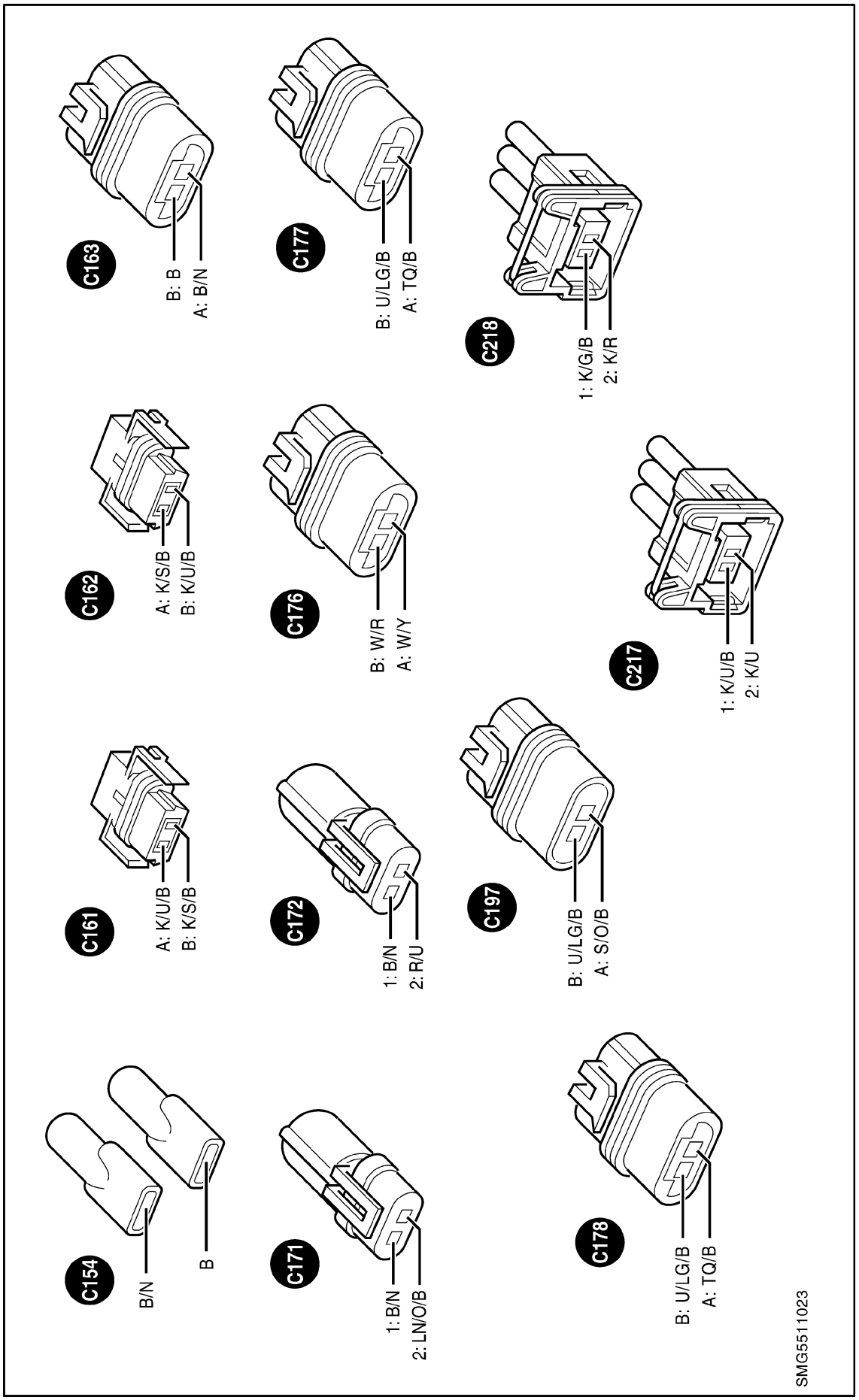
C163
B: B
A: B/N
C177
B: U/LG/B
A: TQ/B
C218
1: K/G/B
2: K/R
C162
A: K/S/B
B: K/U/B
C176
B: W/R
A: W/Y
C217
1: K/U/B
2: K/U
C161
A: K/U/B
B: K/S/B
C172
1: B/N
2: R/U
C197
B: U/LG/B
A: S/O/B
C154
B/N
B
C171
1: B/N
2: LN/O/B
C178
B: U/LG/B
A: TQ/B
SMG5511023

CAB HARNESS CONNECTORS (16x16 Electroshift and 24x24 Dual Command models)

Connector No.	Component	Harness
C001	Cab Main Bulkhead Connector	CM
C020	Cab Main Extension Connector	CM
C053	Remote Valve Solenoid	CM
C055	Trailer Socket	CM
C062	Right Hand Stop Lamp Switch	CM
C063	Left Hand Stop Lamp Switch	CM
C064	Right Hand Lower Front Worklamp	CM
C065	Left Hand Lower Front Worklamp	CM
C066	Right Side Lamp	CM
C067	Left Side Lamp	CM
C068	Radar	CM
C072	Starter Switch	CM
C073	Windshield Wiper Switch	CM
C074	Turn and Main Lights Switch	CM
C076	Clutch Switch	CM
C077	Clutch Potentiometer	CM
C078	Rear Wiper Switch	CM
C079	Instrument Cluster ‘A’	CM
C080	Instrument Cluster ‘B’	CM
C081	Instrument Cluster ‘C’	CM
C082	Beacon Switch	CM
C083	Hazard Switch	CM
C084	Left Hand Upper Front Worklamp	CM
C085	Right Hand Upper Front Worklamp	CM
C086	Left Hand NASO Front Flasher	CM
C087	Right Hand NASO Front Flasher	CM
C088	Front Wiper Motor	CM
C090	Left hand Door Switch	CM
C091	Right hand Door Switch	CM
C092	Console Lamp	CM
C093	Left Hand NASO Rear Flasher	CM
C094	Right Hand NASO Rear Flasher	CM
C095	Left Hand Rear Licence/Worklamp	CM
C096	Right Hand Rear Licence/Worklamp	CM
C097	Left Hand Beacon	CM
C098	Right Hand Beacon	CM
C099	Interior Lamp	CM
C102	Fast Raise/Lower Switch	CM
C103	Gear Shift Connector	CM
C104	Gear Shift Indicator	CM
C106	Radio A	CM
C107	Radio B	CM
C108	Clock	CM

CAB HARNESS CONNECTORS

Connector No.	Component	Harness
C109	Rear Wiper Motor	CM
C110	Right hand Speaker	CM
C111	Left hand Speaker	CM
C116	Rear PTO Switch	CM
C117	Rear PTO Engaged Lamp	CM
C119	Heater Air-Con Connector	CM
C120	EDC Control Panel 1	CM
C121	EDC Control Panel 2	CM
C122	EDC Control Panel 3 (solenoid lamps)	CM
C125	Diagnostic Plug TCM	CM
C127	EDC Module (CN2)	CM
C128	EDC Module (CN1)	CM
C129	Worklamp Right Hand Fender	CM
C130	Worklamp Left Hand Fender	CM
C131	Licence Plate Lamp	CM
C132	Rear Lamp Right Hand Fender	CM
C133	Rear Lamp Left Hand Fender	CM
C134	HPL Raise/Lower Right Hand Switch	CM
C135	HPL Raise/Lower Left Hand Switch	CM
C136	Handbrake	CM
C137	PTO Alarm Seat Switch	CM
C138	Seat Pump	CM
C139	Front Washer Motor	CM
C140	Rear Washer Motor	CM
C143	External 40 Amp Implement Socket	CM
C147	Remote Valve Switch	CM
C149	Quadrant Potentiometer	CM
C180	Accessory Socket	CM
C181	540/100 PTO lever Switch	CM
C182	Four Wheel Drive Switch	CM

Connector No.	Component	Harness
C183	Differential Lock Switch	CM
C186	Hi-Lo Lamps wiring for 24x24 only	CM
C187	Implement Socket Switch	CM
C188	Front Lower Worklamps Switch	CM
C189	Front Upper Worklamps Switch	CM
C191	Rear Worklamps Switch	CM
C192	Creeper Gear Switch	CM
C193	Cigar Lighter	CM
C196	Shuttle Dump Switch	CM
C209	Battery	CM
C219	FWD and Diff Lock Switch Harness	CM
C220	Accessory Harness Connector	CM
C221	Implement Status Socket	CM
C223	'B' Pillar harness Connector	CM
C225	Cab Positive Splice Connector	CM
C228	Clock 2	CM
C233	Flasher Relay	CM
C234	Implement Relay	CM
C235	40 Amp pole terminal to Harness	CM
C236	40 Amp Ring Terminals	CM

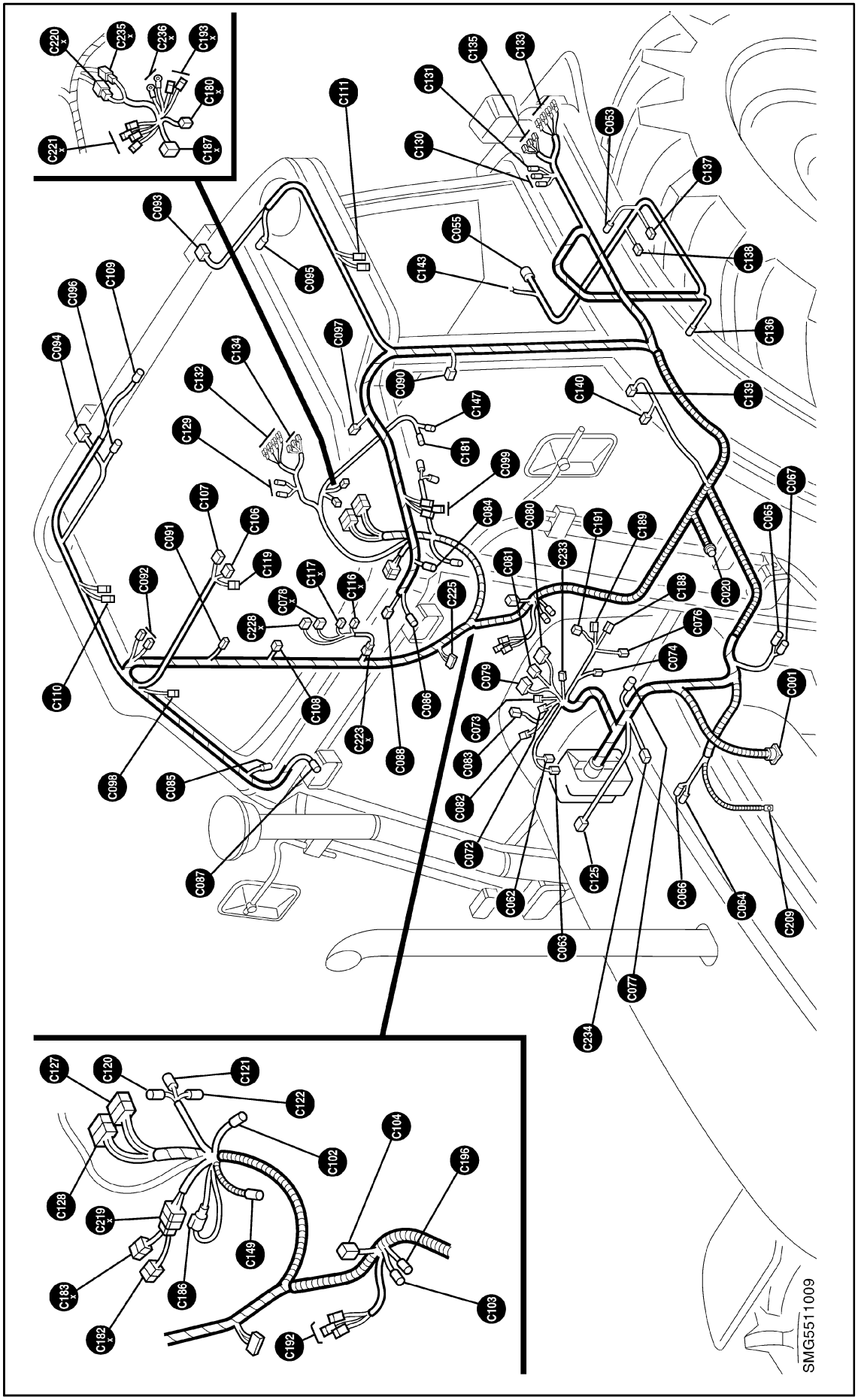
C220
C235
C236
C193
C180
C221
C187
C111
C135
C133
C131
C053
C130
C137
C093
C055
C095
C143
C138
C096
C109
C097
C136
C094
C134
C132
C050
C140
C139
C147
C129
C181
C099
C067
C107
C084
C080
C191
C189
C065
C106
C091
C233
C081
C119
C117
C116
C188
C020
C092
C078
C225
C076
C228
C074
C079
C001
C110
C103
C086
C073
C223
C088
C083
C098
C085
C082
C072
C125
C087
C062
C066
C064
C209
C063
C077
C234
C127
C120
C121
C122
C104
C102
C196
C128
C219
C149
C183
C186
C103
C182
C192
SMG5511009

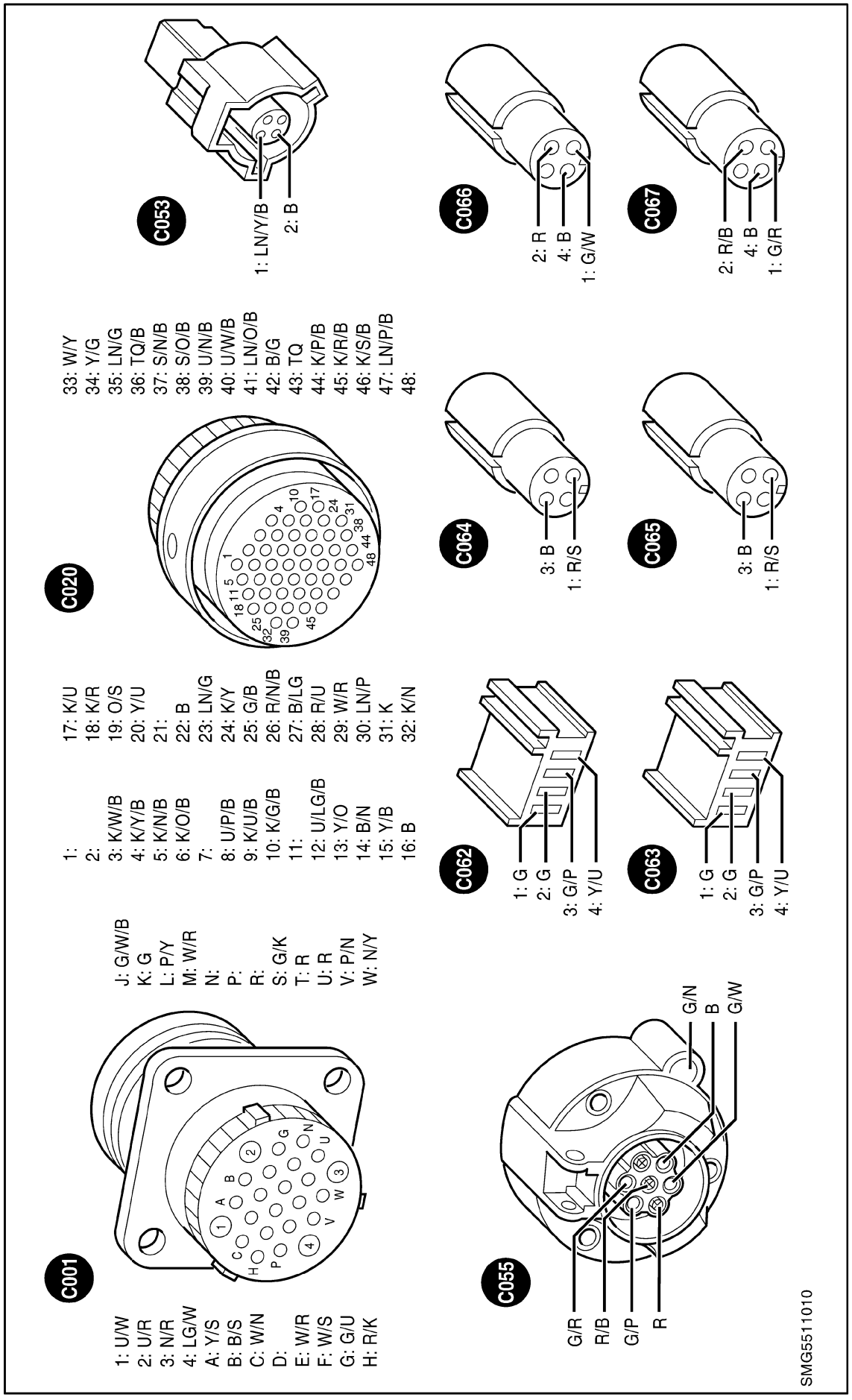
C001
1: U/W
2: U/R
3: N/R
4: LG/W
A: Y/S
B: B/S
C: W/N
D:
E: W/R
F: W/S
G: G/U
H: R/K
J: G/W/B
K: G
L: P/Y
M: W/R
N:
P:
R:
S: G/K
T: R
U: R
V: P/N
W: N/Y
C020
1:
2:
3: K/W/B
4: K/Y/B
5: K/N/B
6: K/O/B
7:
8: U/P/B
9: K/U/B
10: K/G/B
11:
12: U/LG/B
13: Y/O
14: B/N
15: Y/B
16: B
17: K/U
18: K/R
19: O/S
20: Y/U
21:
22: B
23: LN/G
24: K/Y
25: G/B
26: R/N/B
27: B/LG
28: R/U
29: W/R
30: LN/P
31: K
32: K/N
33: W/Y
34: Y/G
35: LN/G
36: TQ/B
37: S/N/B
38: S/O/B
39: U/N/B
40: U/W/B
41: LN/O/B
42: B/G
43: TQ
44: K/P/B
45: K/R/B
46: K/S/B
47: LN/P/B
48:
C053
1: LN/Y/B
2: B
C066
2: R
4: B
1: G/W
C067
2: R/B
4: B
1: G/R
C064
3: B
1: R/S
C065
3: B
1: R/S
C062
1: G
2: G
3: G/P
4: Y/U
C063
1: G
2: G
3: G/P
4: Y/U
C055
G/R
R/B
G/P
R
G/N
B
G/W
SMG5511010

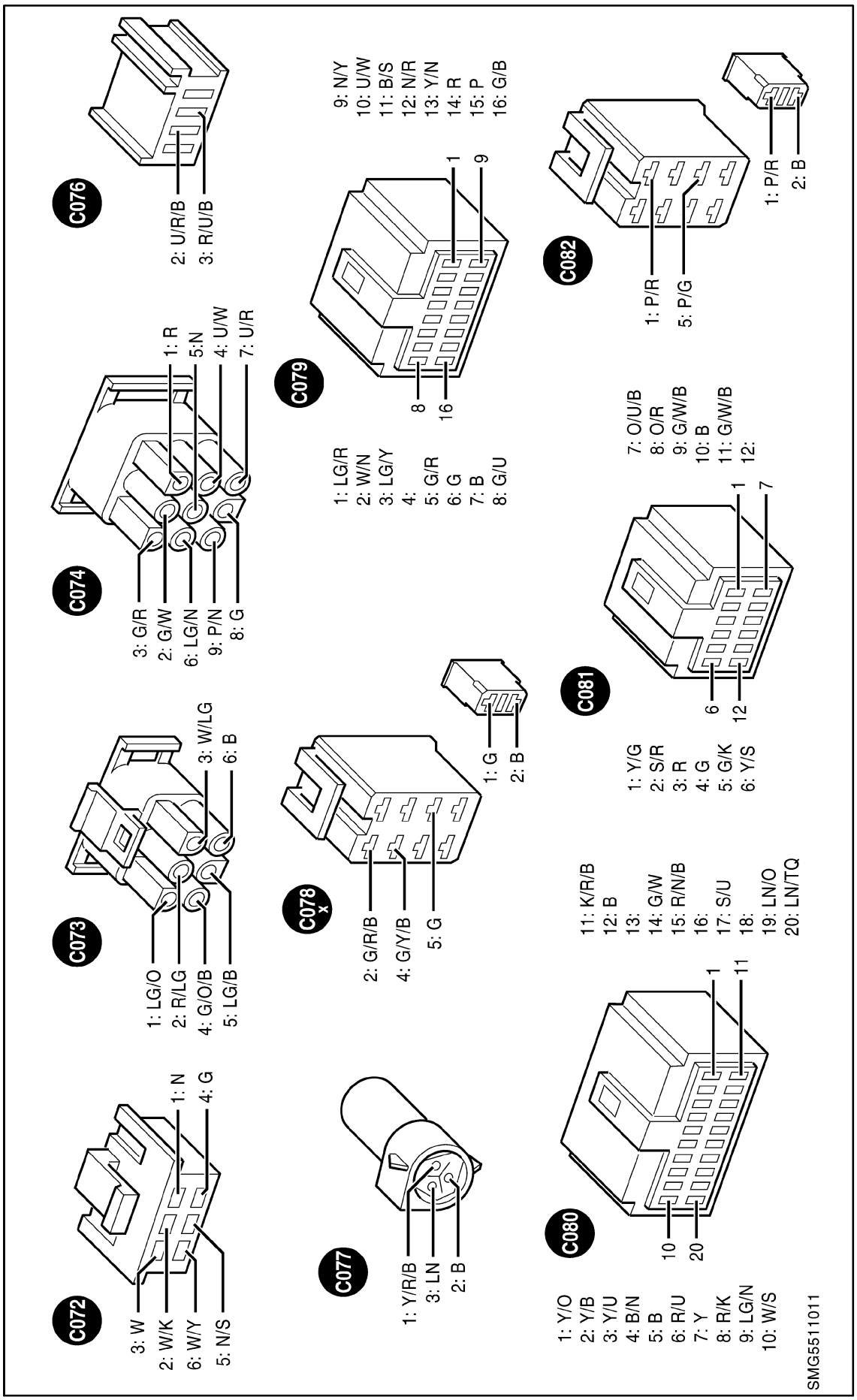
C076
2: U/R/B
3: R/U/B
C074
1: R
5:N
4: U/W
7: U/R
3: G/R
2: G/W
6: LG/N
9: P/N
8: G
C079
9: N/Y
10: U/W
11: B/S
12: N/R
13: Y/N
14: R
15: P
16: G/B
1
9
8
16
1: LG/R
2: W/N
3: LG/Y
4:
5: G/R
6: G
7: B
8: G/U
C082
1: P/R
5: P/G
1: P/R
2: B
C073
3: W/LG
6: B
1: LG/O
2: R/LG
4: G/O/B
5: LG/B
C078
1: G
2: B
2: G/R/B
4: G/Y/B
5: G
C081
7: O/U/B
8: O/R
9: G/W/B
10: B
11: G/W/B
12:
1
7
6
12
1: Y/G
2: S/R
3: R
4: G
5: G/K
6: Y/S
C072
1: N
4: G
3: W
2: W/K
6: W/Y
5: N/S
C077
1: Y/R/B
3: LN
2: B
C080
1
11
10
20
11: K/R/B
12: B
13:
14: G/W
15: R/N/B
16:
17: S/U
18:
19: LN/O
20: LN/TQ
1: Y/O
2: Y/B
3: Y/U
4: B/N
5: B
6: R/U
7: Y
8: R/K
9: LG/N
10: W/S
SMG5511011

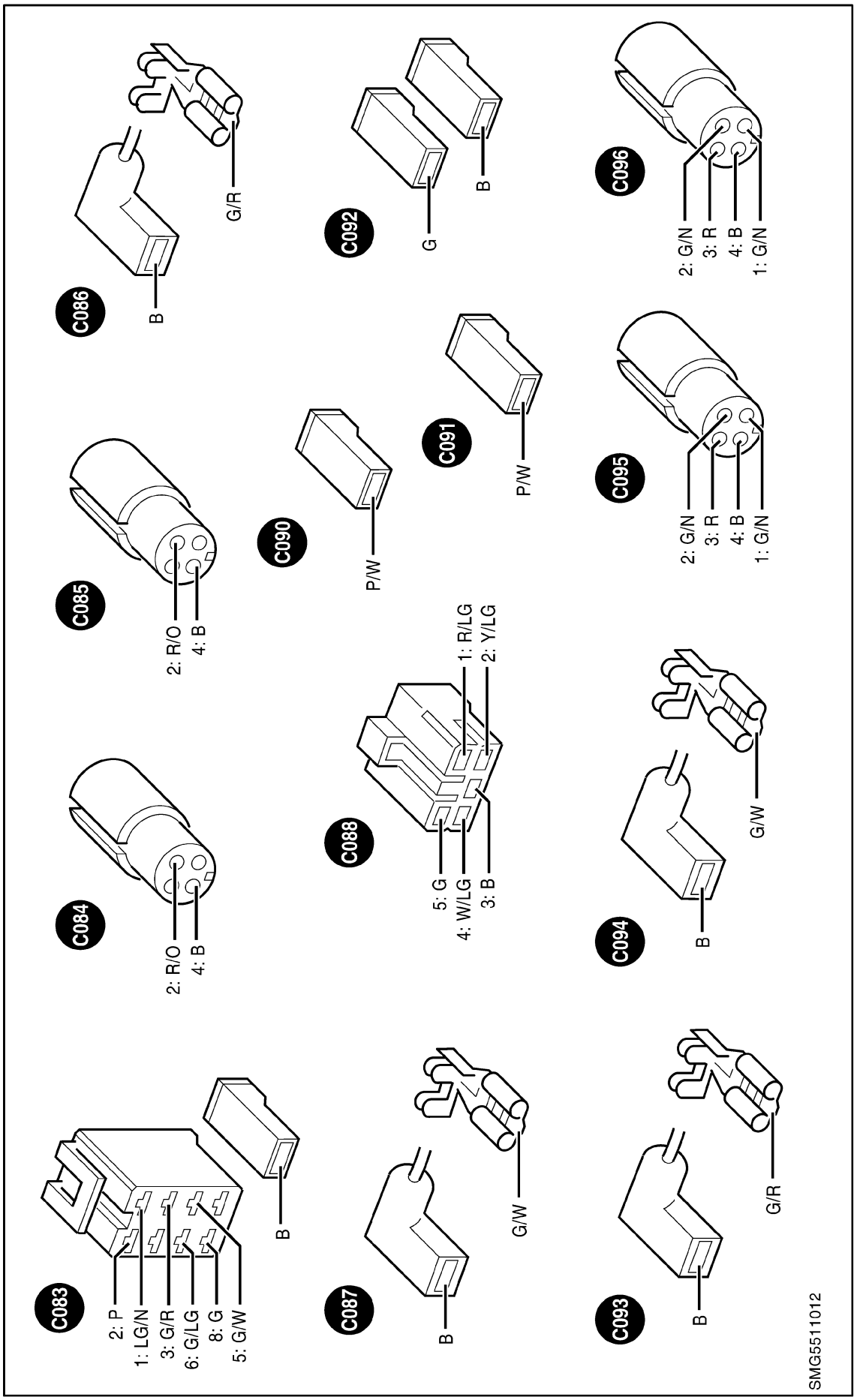
C083
2: P
1: LG/N
3: G/R
6: G/LG
8: G
5: G/W
B
C084
2: R/O
4: B
C085
2: R/O
4: B
C086
B
G/R
C087
B
G/W
C088
5: G
4: W/LG
3: B
1: R/LG
2: Y/LG
C090
P/W
C091
P/W
C092
G
B
C093
B
G/R
C094
B
G/W
C095
2: G/N
3: R
4: B
1: G/N
C096
2: G/N
3: R
4: B
1: G/N
SMG5511012

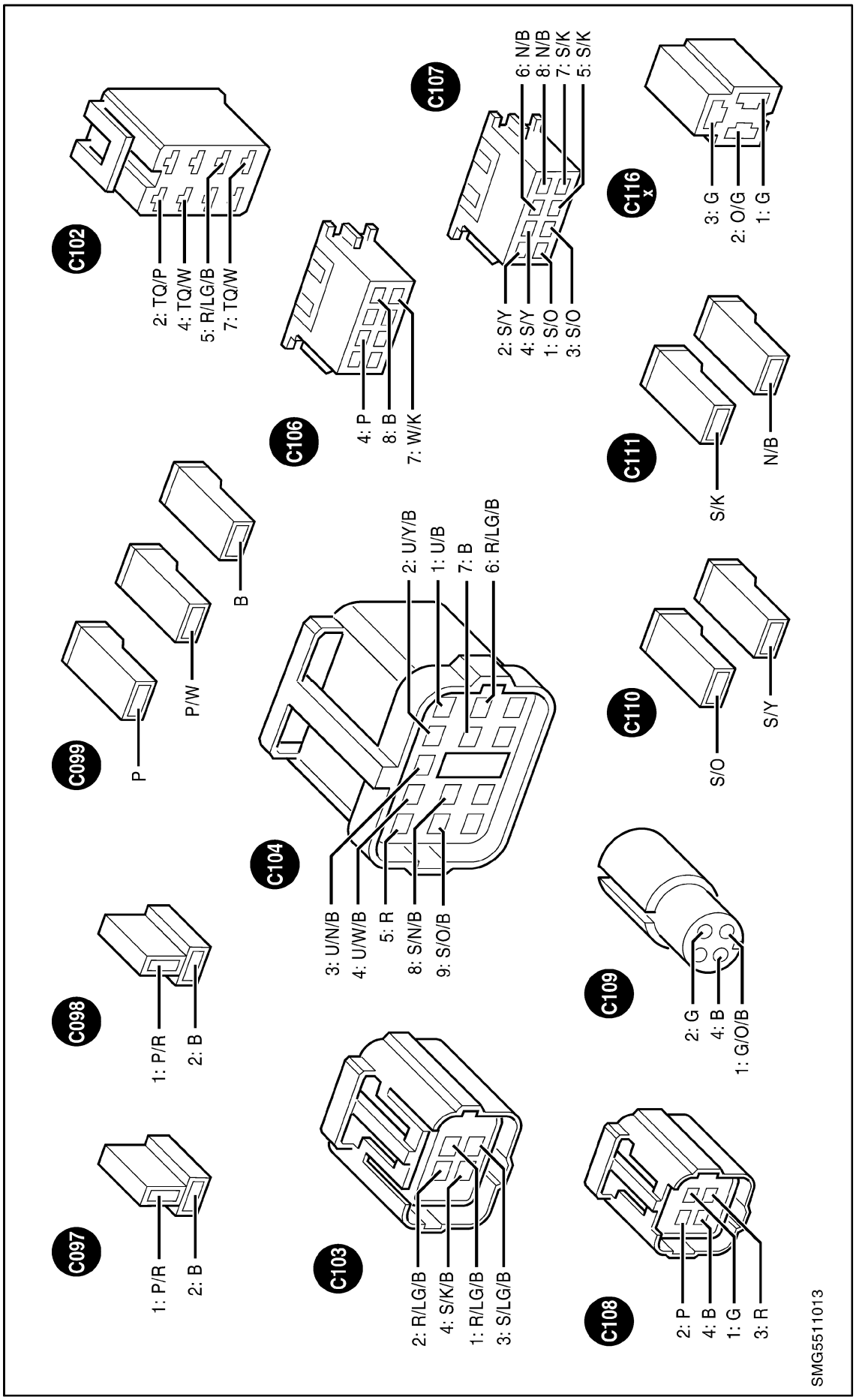
C102
2: TQ/P
4: TQ/W
5: R/LG/B
7: TQ/W
C107
6: N/B
8: N/B
7: S/K
5: S/K
2: S/Y
4: S/Y
1: S/O
3: S/O
C116
x
3: G
2: O/G
1: G
C106
4: P
8: B
7: W/K
C111
S/K
N/B
C099
P
P/W
B
C104
2: U/Y/B
1: U/B
7: B
6: R/LG/B
3: U/N/B
4: U/W/B
5: R
8: S/N/B
9: S/O/B
C110
S/O
S/Y
C098
1: P/R
2: B
C109
2: G
4: B
1: G/O/B
C097
1: P/R
2: B
C103
2: R/LG/B
4: S/K/B
1: R/LG/B
3: S/LG/B
C108
2: P
4: B
1: G
3: R
SMG5511013

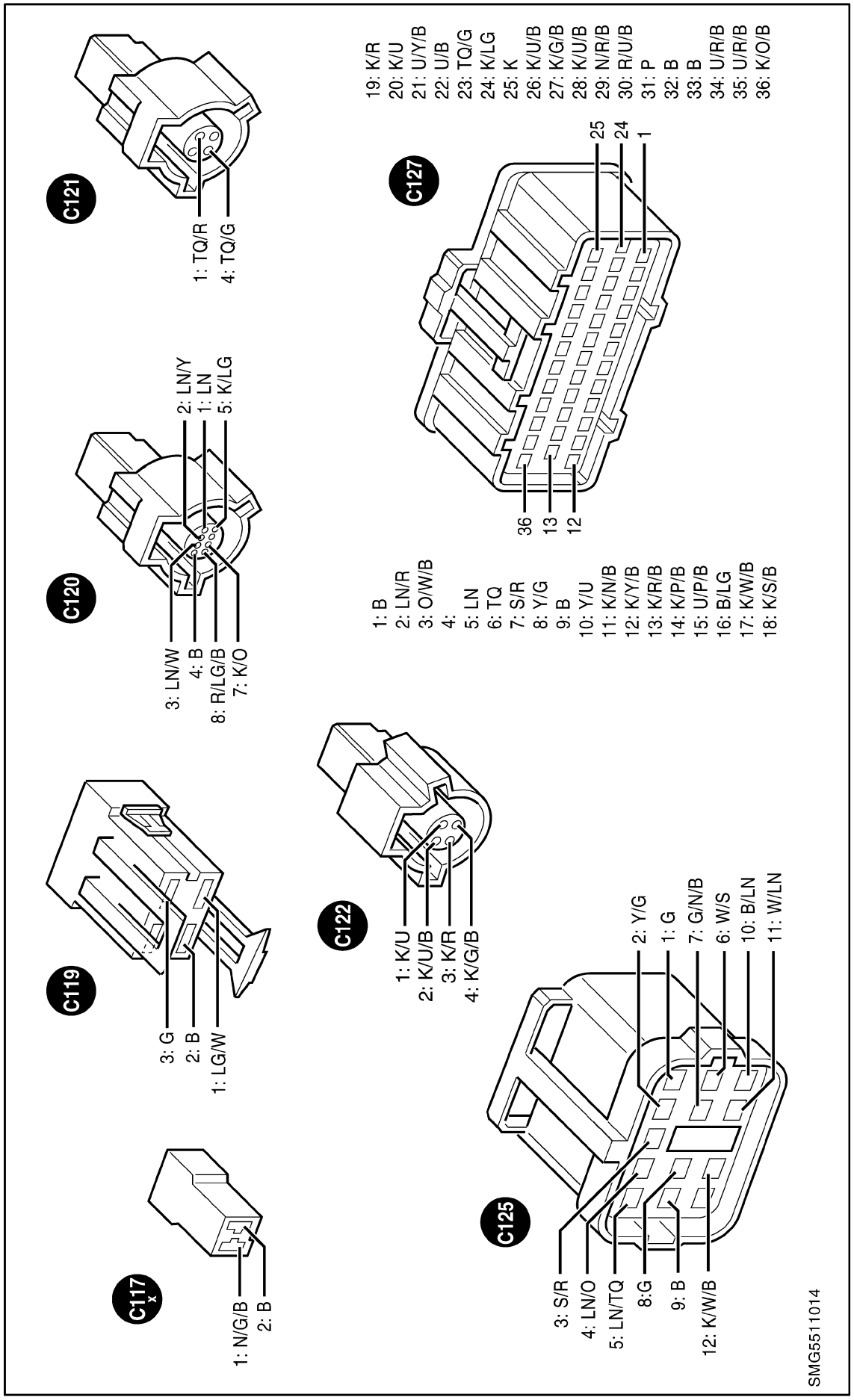
C121
1: TQ/R
4: TQ/G
C120
3: LN/W
4: B
8: R/LG/B
7: K/O
2: LN/Y
1: LN
5: K/LG
C119
3: G
2: B
1: LG/W
C117
1: N/G/B
2: B
C122
1: K/U
2: K/U/B
3: K/R
4: K/G/B
C127
36
13
12
25
24
1
1: B
2: LN/R
3: O/W/B
4:
5: LN
6: TQ
7: S/R
8: Y/G
9: B
10: Y/U
11: K/N/B
12: K/Y/B
13: K/R/B
14: K/P/B
15: U/P/B
16: B/LG
17: K/W/B
18: K/S/B
19: K/R
20: K/U
21: U/Y/B
22: U/B
23: TQ/G
24: K/LG
25: K
26: K/U/B
27: K/G/B
28: K/U/B
29: N/R/B
30: R/U/B
31: P
32: B
33: B
34: U/R/B
35: U/R/B
36: K/O/B
C125
3: S/R
4: LN/O
5: LN/TQ
8:G
9: B
12: K/W/B
2: Y/G
1: G
7: G/N/B
6: W/S
10: B/LN
11: W/LN
SMG5511014

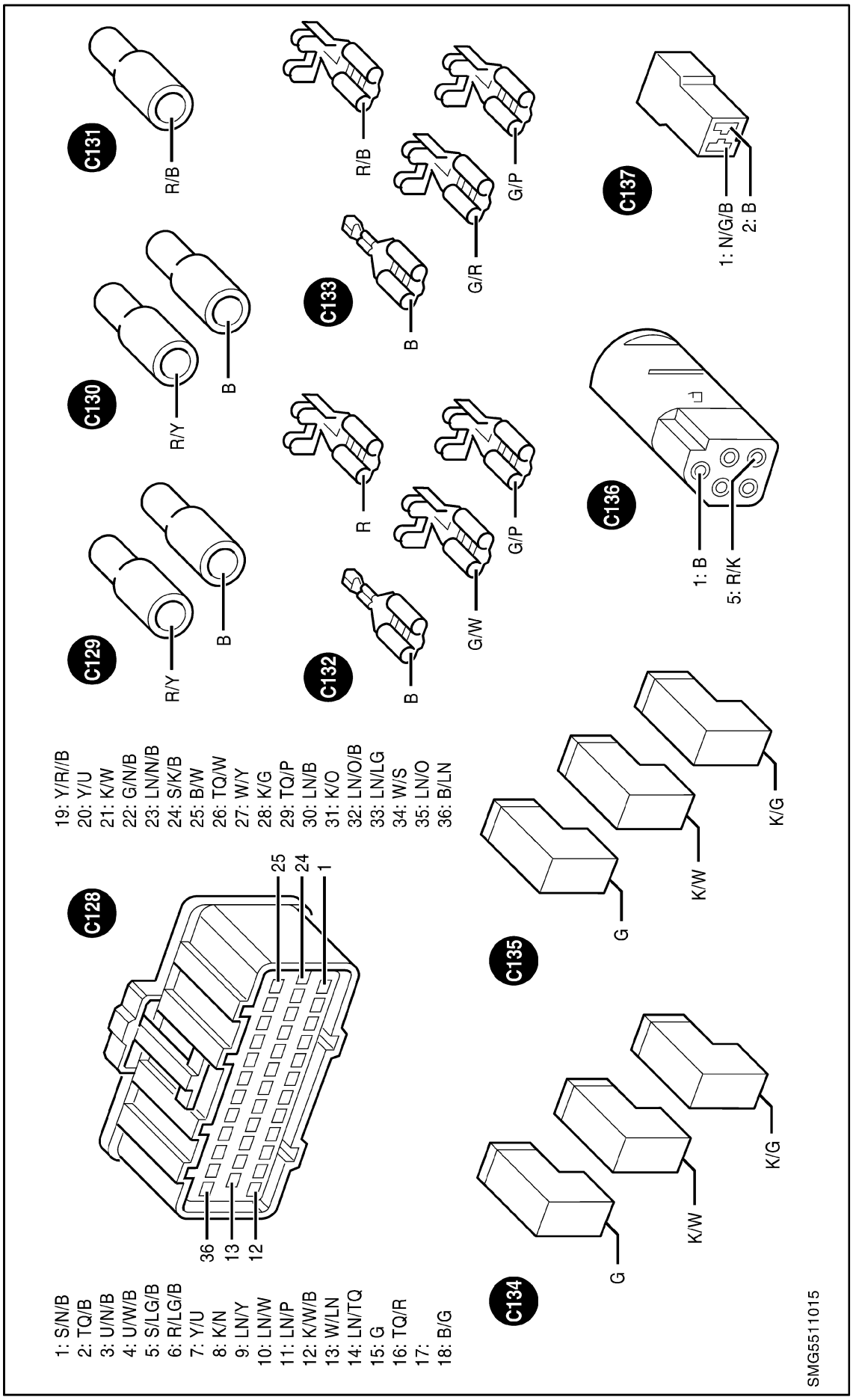
C131
R/B
C130
R/Y
B
C129
R/Y
B
C133
R/B
G/P
G/R
B
C132
R
G/P
G/W
B
C137
1: N/G/B
2: B
C136
1: B
5: R/K
C135
G
K/W
K/G
C134
G
K/W
K/G
C128
25
24
1
36
13
12
1: S/N/B
2: TQ/B
3: U/N/B
4: U/W/B
5: S/LG/B
6: R/LG/B
7: Y/U
8: K/N
9: LN/Y
10: LN/W
11: LN/P
12: K/W/B
13: W/LN
14: LN/TQ
15: G
16: TQ/R
17:
18: B/G
19: Y/R/B
20: Y/U
21: K/W
22: G/N/B
23: LN/N/B
24: S/K/B
25: B/W
26: TQ/W
27: W/Y
28: K/G
29: TQ/P
30: LN/B
31: K/O
32: LN/O/B
33: LN/LG
34: W/S
35: LN/O
36: B/LN
SMG5511015

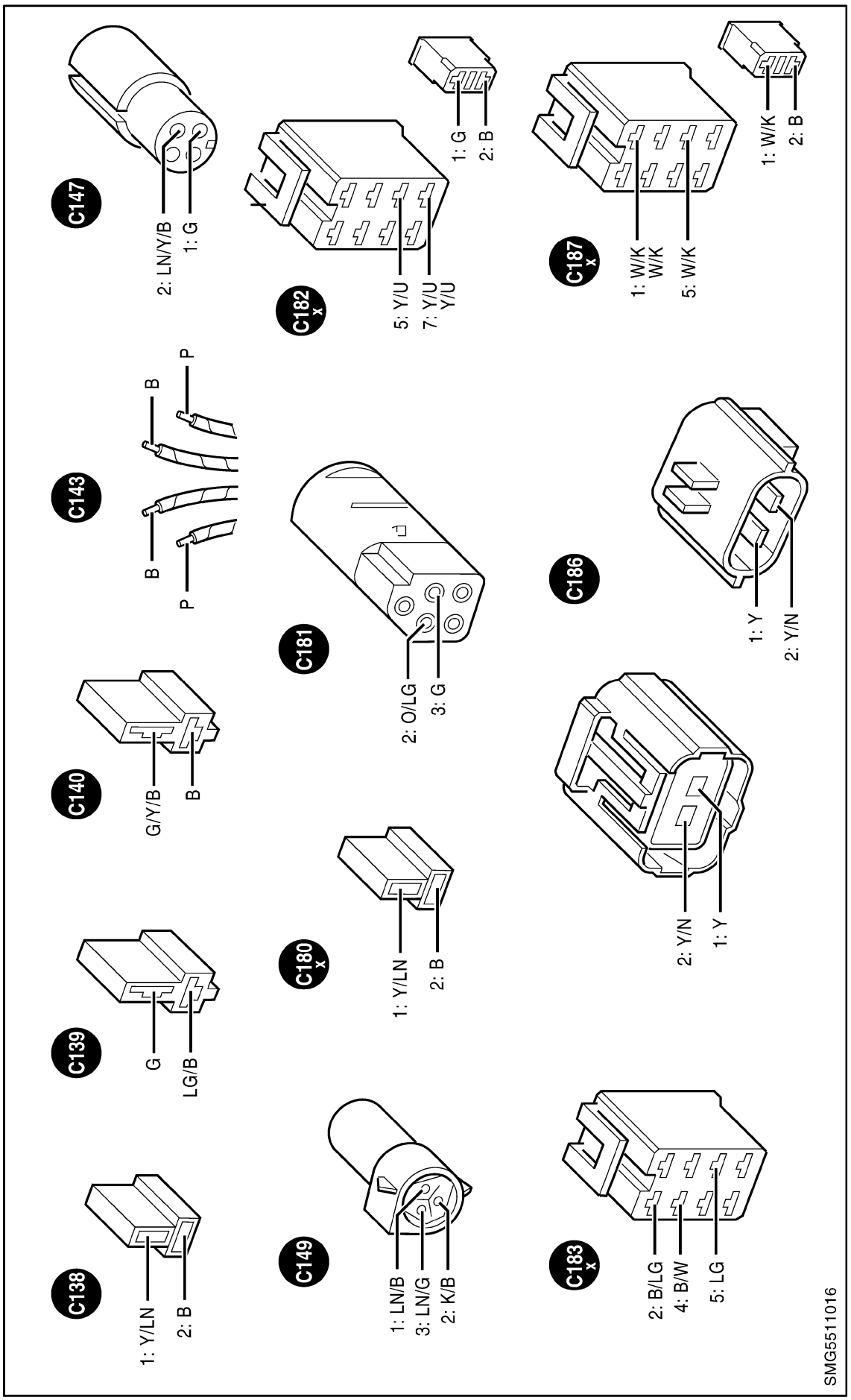
C147
2: LN/Y/B
1: G
C182
x
5: Y/U
7: Y/U
Y/U
1: G
2: B
C187
x
1: W/K
W/K
5: W/K
1: W/K
2: B
C143
B
P
B
P
C181
2: O/LG
3: G
C186
1: Y
2: Y/N
C140
G/Y/B
B
C180
x
1: Y/LN
2: B
2: Y/N
1: Y
C139
G
LG/B
C138
1: Y/LN
2: B
C149
1: LN/B
3: LN/G
2: K/B
C183
x
2: B/LG
4: B/W
5: LG
SMG5511016

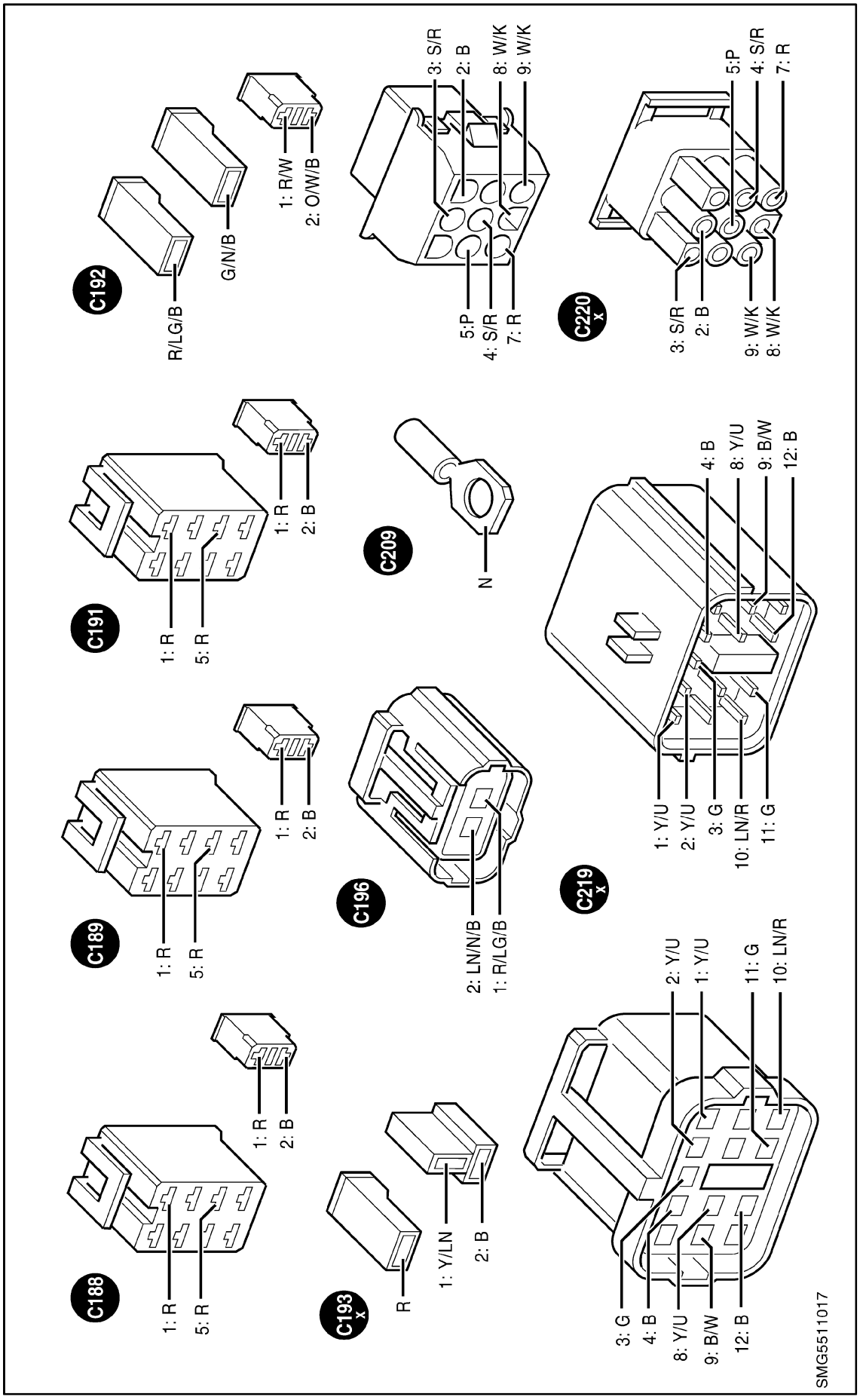
C192
R/LG/B
G/N/B
1: R/W
2: O/W/B
C191
1: R
5: R
1: R
2: B
C189
1: R
5: R
1: R
2: B
C188
1: R
5: R
1: R
2: B
C193
x
R
1: Y/LN
2: B
C196
2: LN/N/B
1: R/LG/B
C209
N
C219
x
1: Y/U
2: Y/U
3: G
10: LN/R
11: G
4: B
8: Y/U
9: B/W
12: B
C220
x
3: S/R
2: B
9: W/K
8: W/K
5:P
4: S/R
7: R
5:P
4: S/R
7: R
3: S/R
2: B
8: W/K
9: W/K
3: G
4: B
8: Y/U
9: B/W
12: B
2: Y/U
1: Y/U
11: G
10: LN/R
SMG5511017

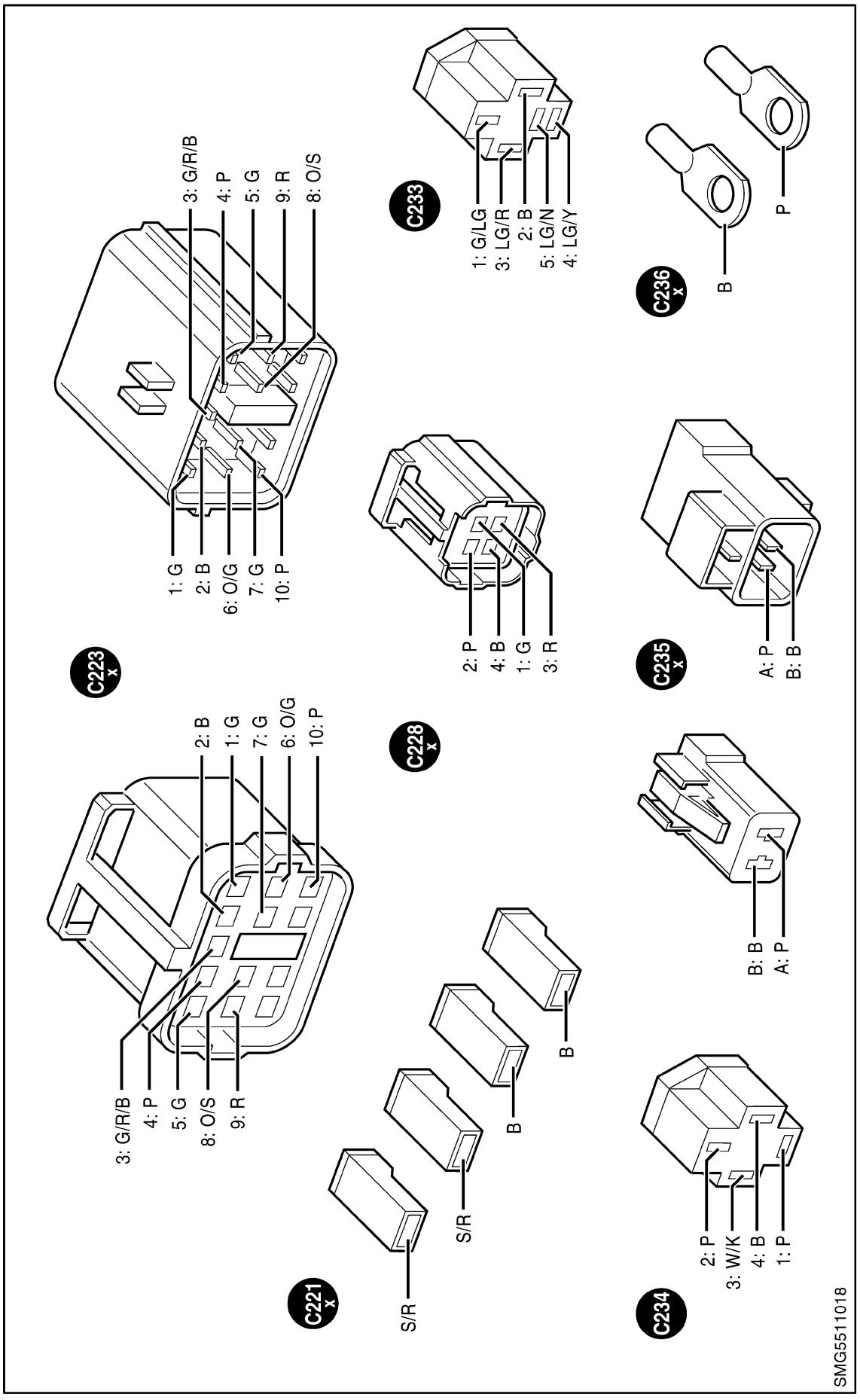
C223 x
1: G
2: B
6: O/G
7: G
10: P
3: G/R/B
4: P
5: G
9: R
8: O/S
C233
1: G/LG
3: LG/R
2: B
5: LG/N
4: LG/Y
C236 x
B
P
C228 x
2: P
4: B
1: G
3: R
C235 x
A: P
B: B
C221 x
3: G/R/B
4: P
5: G
8: O/S
9: R
2: B
1: G
7: G
6: O/G
10: P
S/R
S/R
B
B
B: B
A: P
C234
2: P
3: W/K
4: B
1: P
SMG5511018

COMPONENT TESTING

Page

1. Thermostart Device 141
2. Coolant Temperature Sender 142
3. Engine Oil Pressure Switch 143
4. Engine Oil Pressure Sender 144
5. Alternator 145
6. Air Filter Restriction Switch 146
7. Brake Fluid Level Switch 147
8. Fuel Injection Pump 148
9. Handbrake Switch 149
10. Fuel Gauge Sender 150
11. Low Transmission Oil Pressure Switch 151
12. Oil Filter Restriction Switch 152
13. 40° C Switch 153
14. Low Charge Pressure Switch 154
15. Radar 155
16. Load Sensing Pins 156
17. Lift Lever Potentiometer 157
18. Lift Arm Cross Shaft Potentiometer 158
19. Electronic Draft Control Solenoids 159
20. Electronic Draft Control Panel 160
    - Panel Connector Resistance Table 161
21. PTO Switch 162
22. Transmission Speed Sensor 163
23. Brake Pedal Switches 164
24. Forward/Reverse Dump Switch 165
25. 16x16 Transmission Gear Display 166
26. Clutch Pedal Potentiometer 167
27. Clutch Pedal Disconnect Switch 168
28. PWM Solenoid Valves 169
29. Upshift/Downshift Buttons 170
30. Differential Lock Light Switch 171
31. Differential Lock, PTO, Creep, 4WD & Dump Solenoids 172
32. Transmission Oil Temperature Sensor 173
33. Transmission Status Switches 175
34. Multifunction Switch Lights 176
35. Multifunction Switch Wiper/Wash Switch 177

1. Thermostart Device

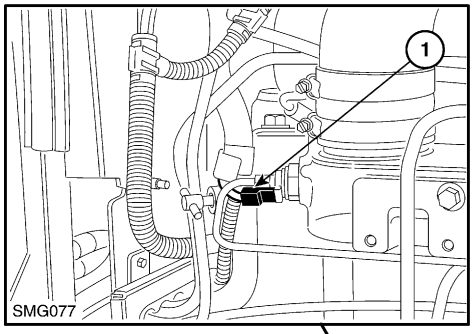

2. Coolant temperature

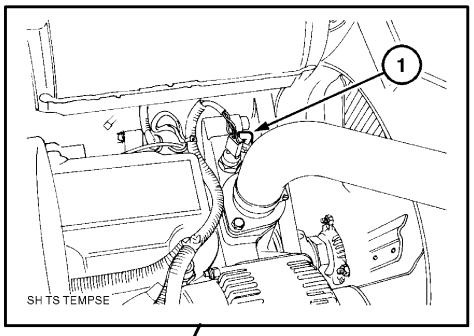

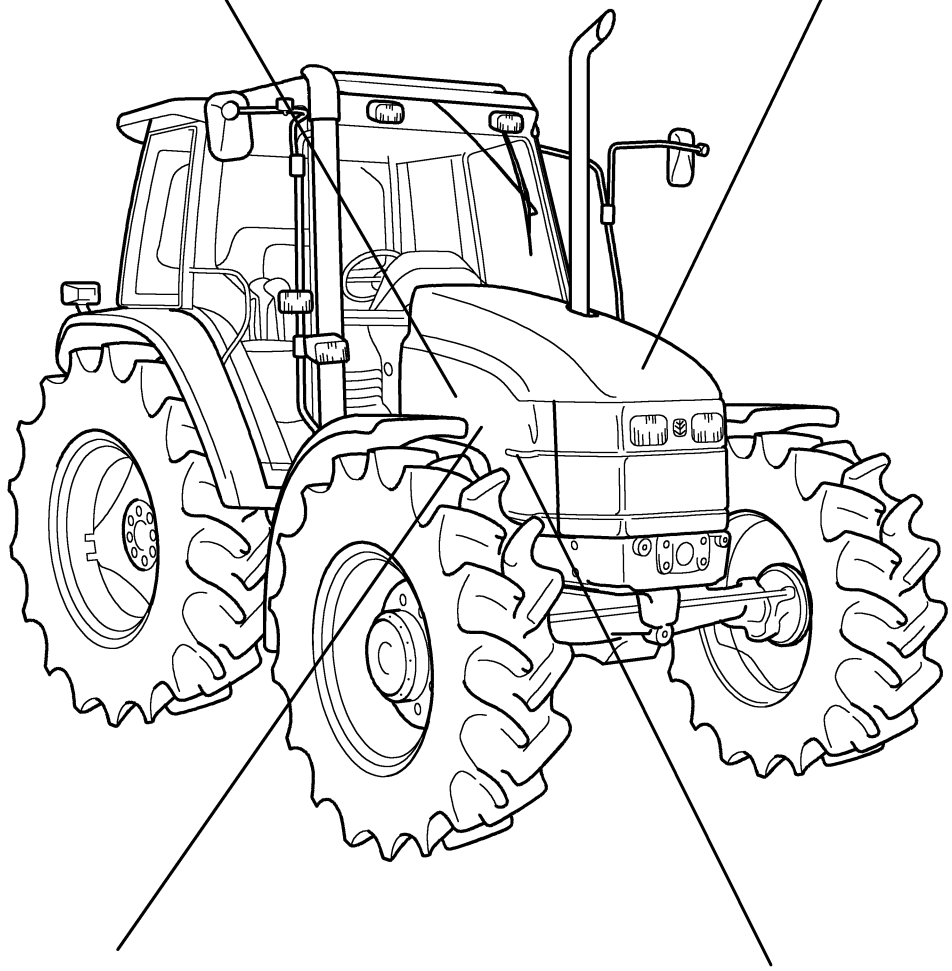

4. Engine Oil Pressure Sender

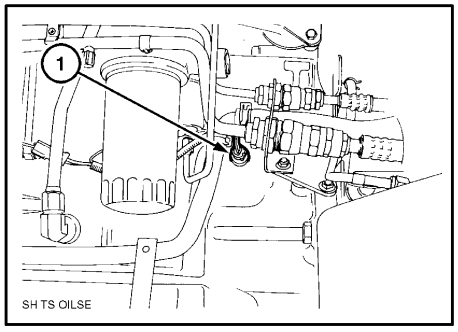

3. Engine Oil Pressure Switch

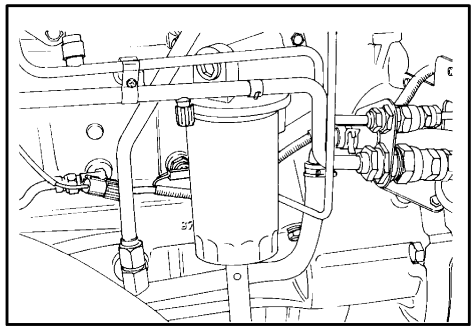

5. Alternator

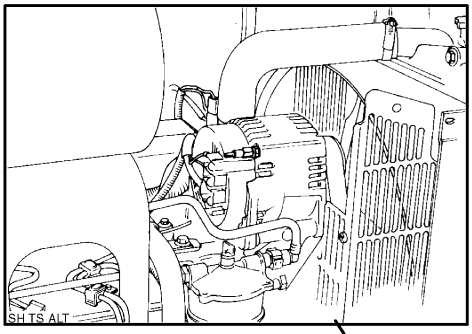

6. Air Filter Restriction Switch

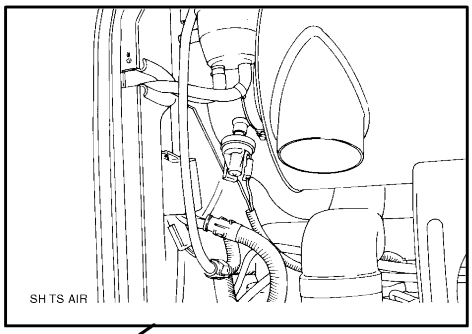

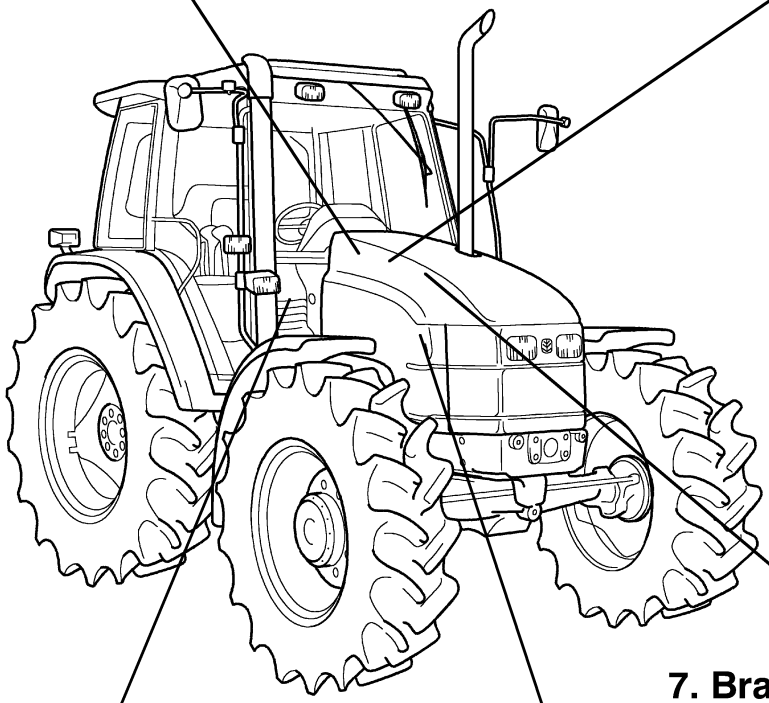

7. Brake Fluid Switch

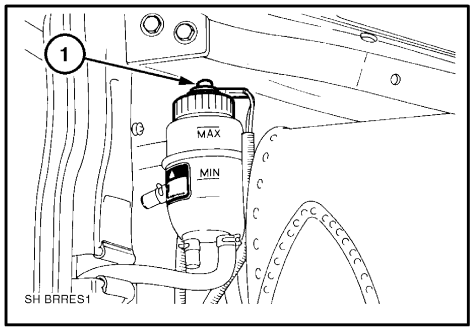

9. Handbrake Switch

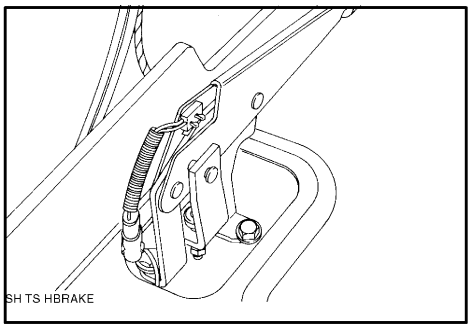

8. Fuel Injection Pump

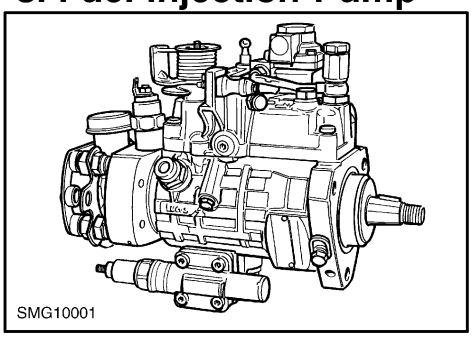

10. Fuel Sender

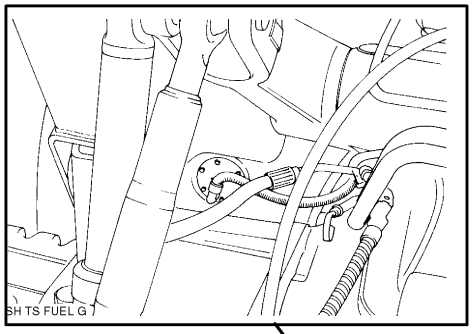

11. Low Transmission Oil Pressure Switch

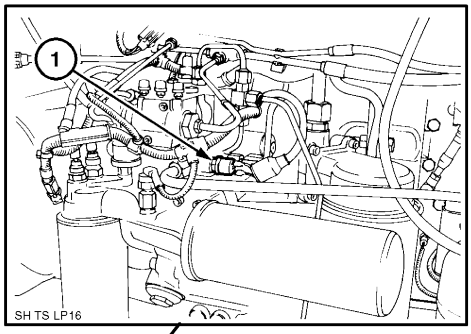

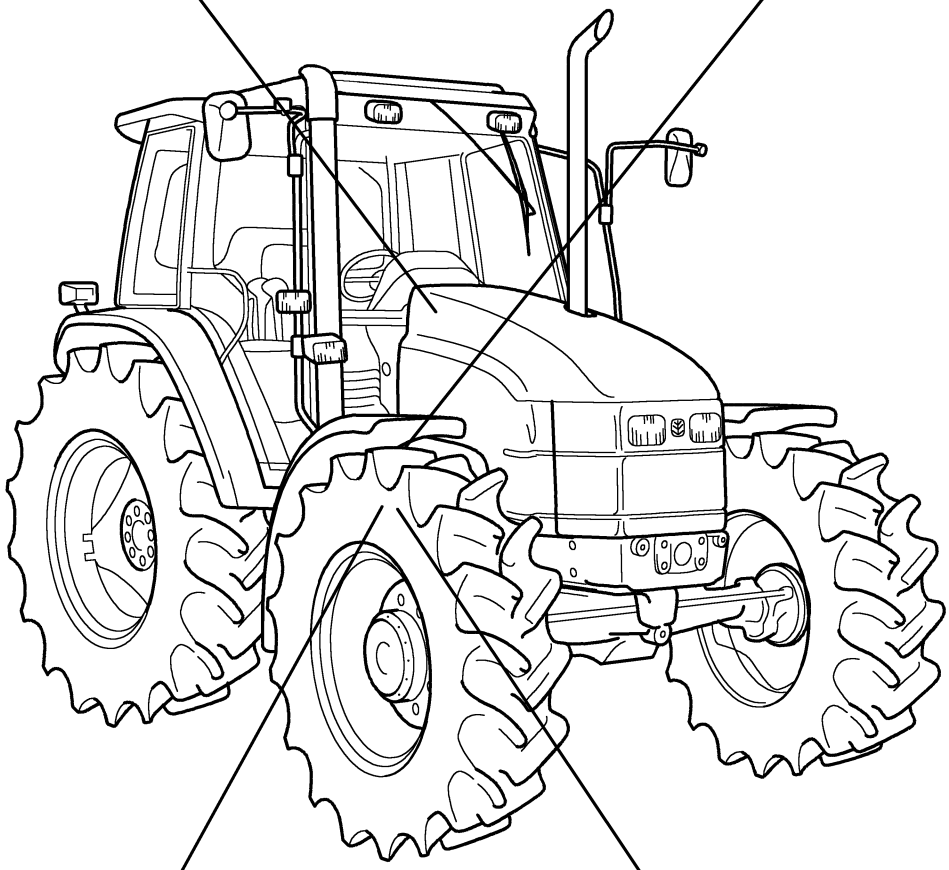

13. 40°C Switch

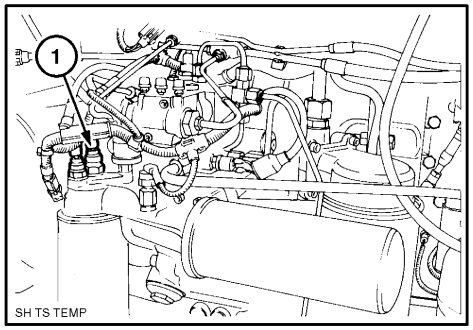

12. Oil Filter Restriction Switch

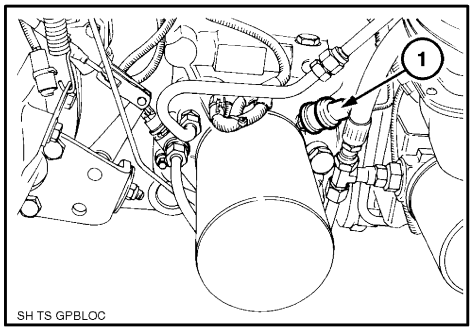

14. Low Charge Pressure Switch

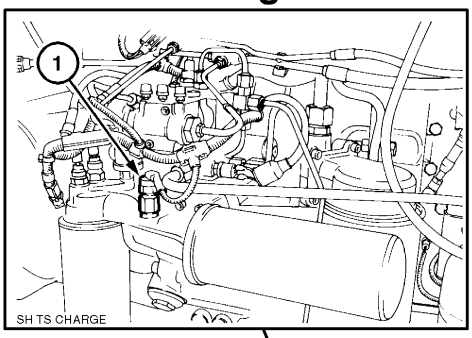

15. Radar

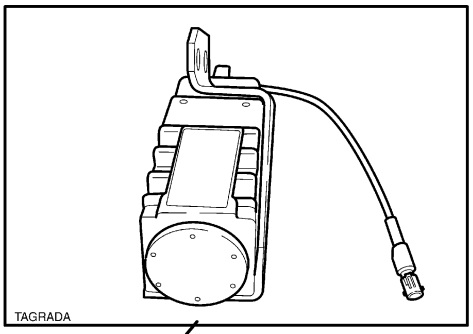

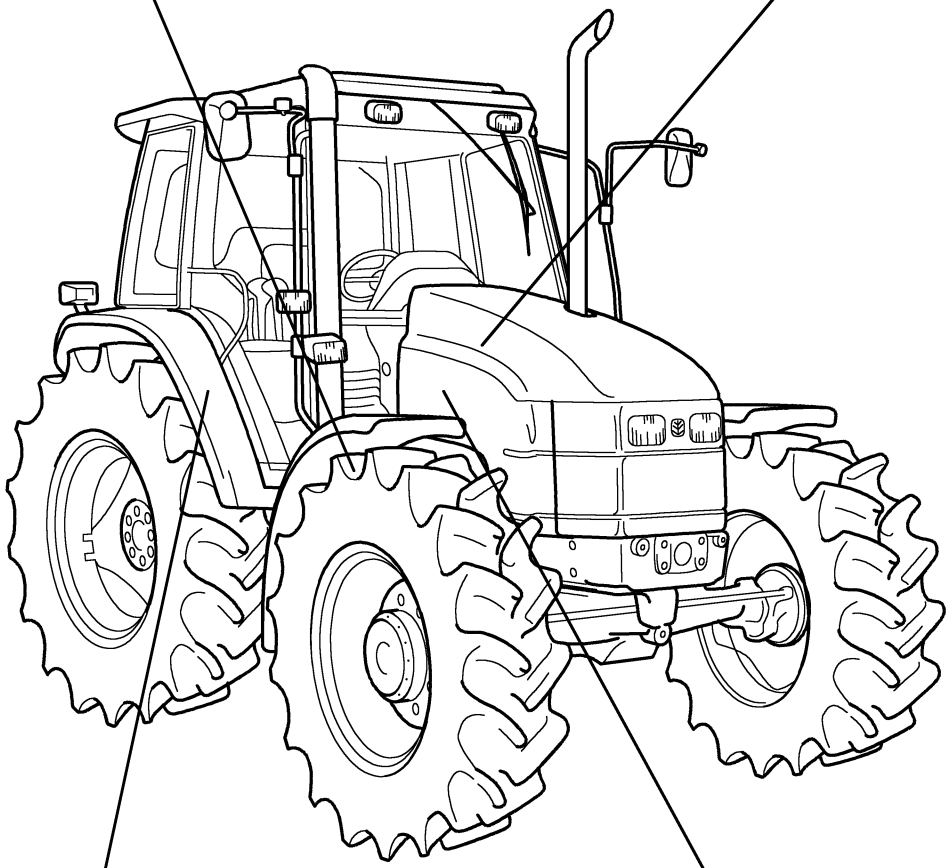

17. Lift Lever Potentiometer

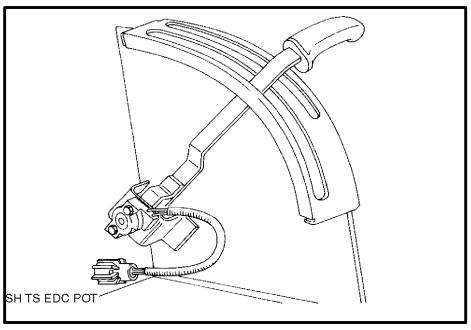

16. Load Sensing Pins

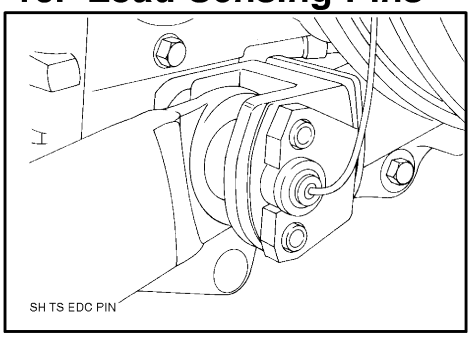

18. Lift Arm Potentiometer

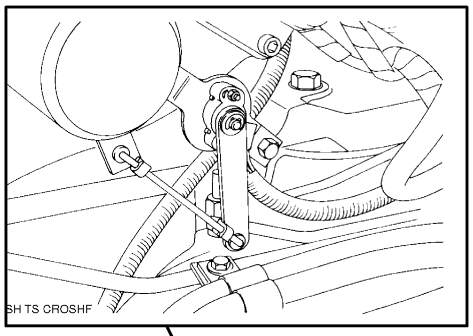

19. EDC Solenoids

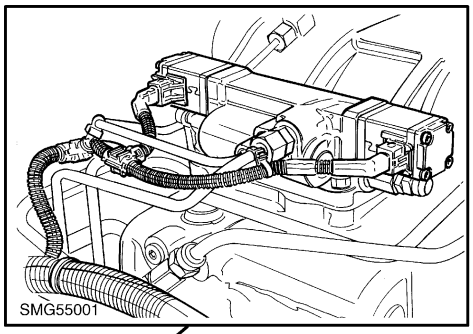

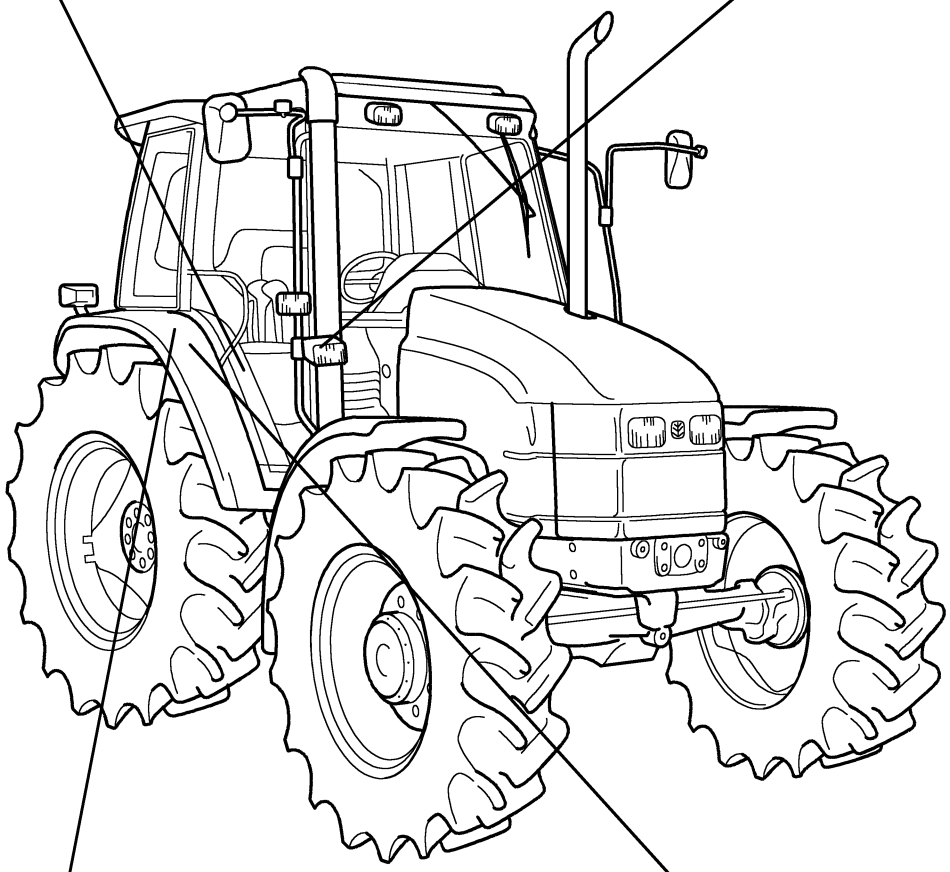

21. PTO Switch

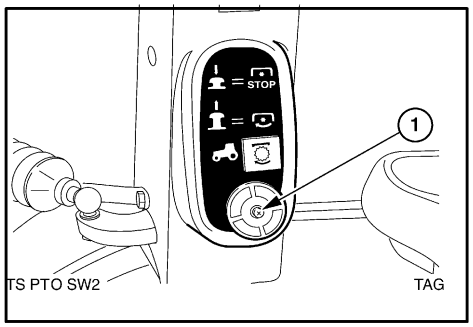

20. EDC Panel

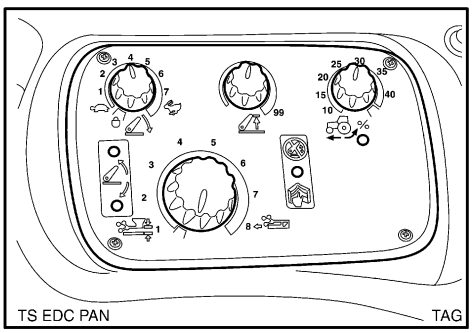

22. Transmission Speed Sensor

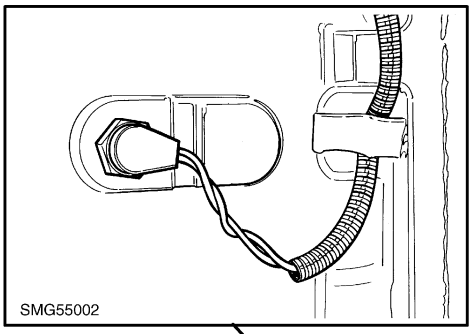

23. Brake Pedal Switches

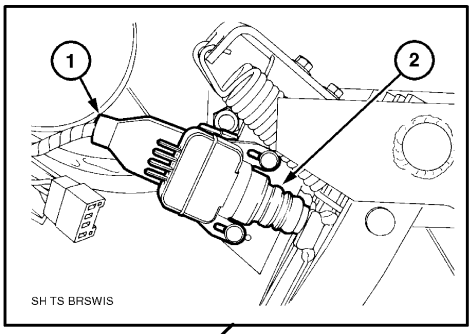

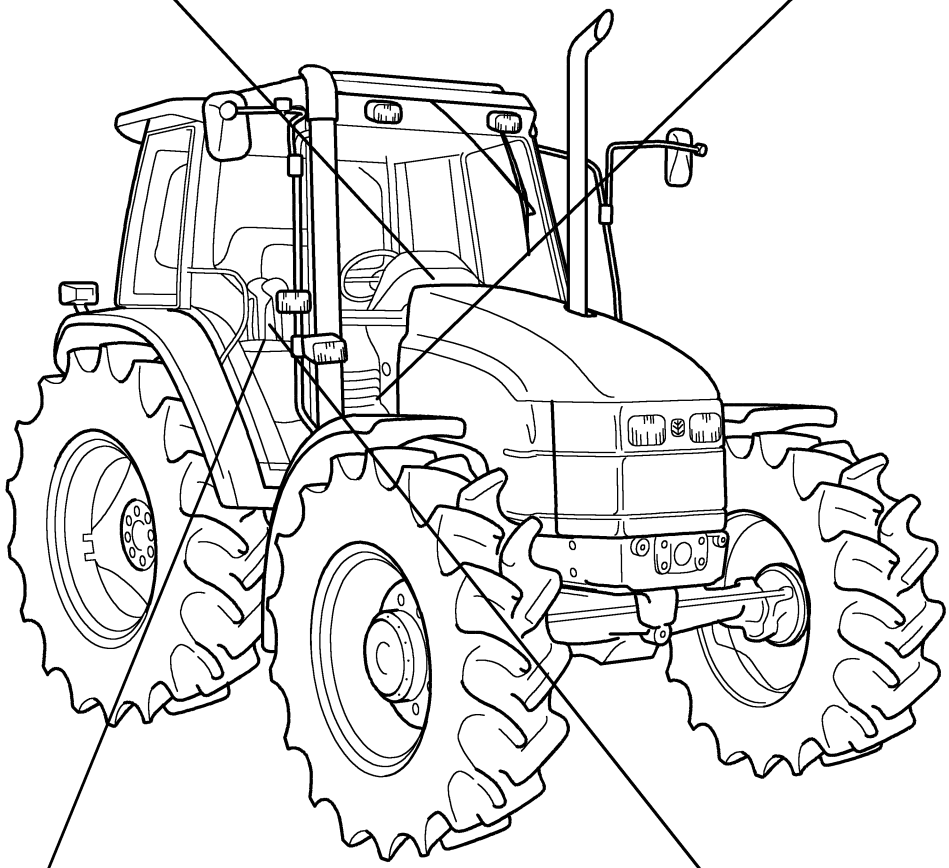

25. 16x16 Gear Display

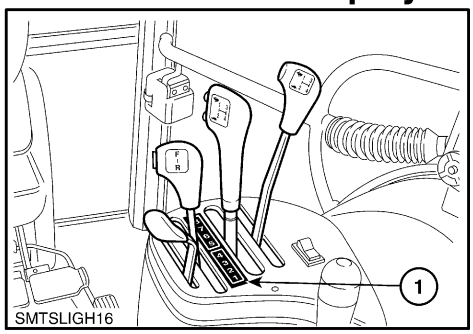

24. Forward/Reverse Shuttle

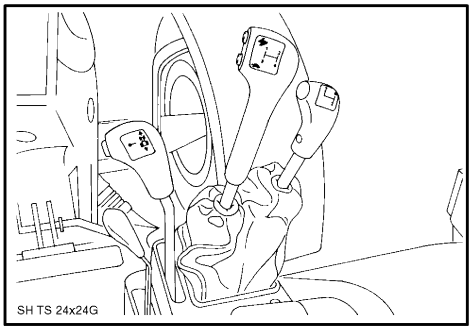

26. Clutch Pedal Potentiometer

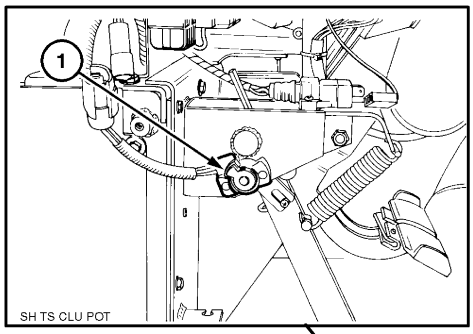

27. Clutch Disconnect Switch

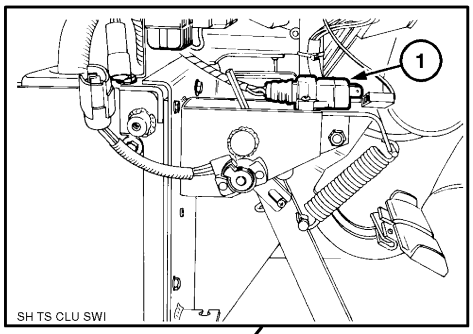

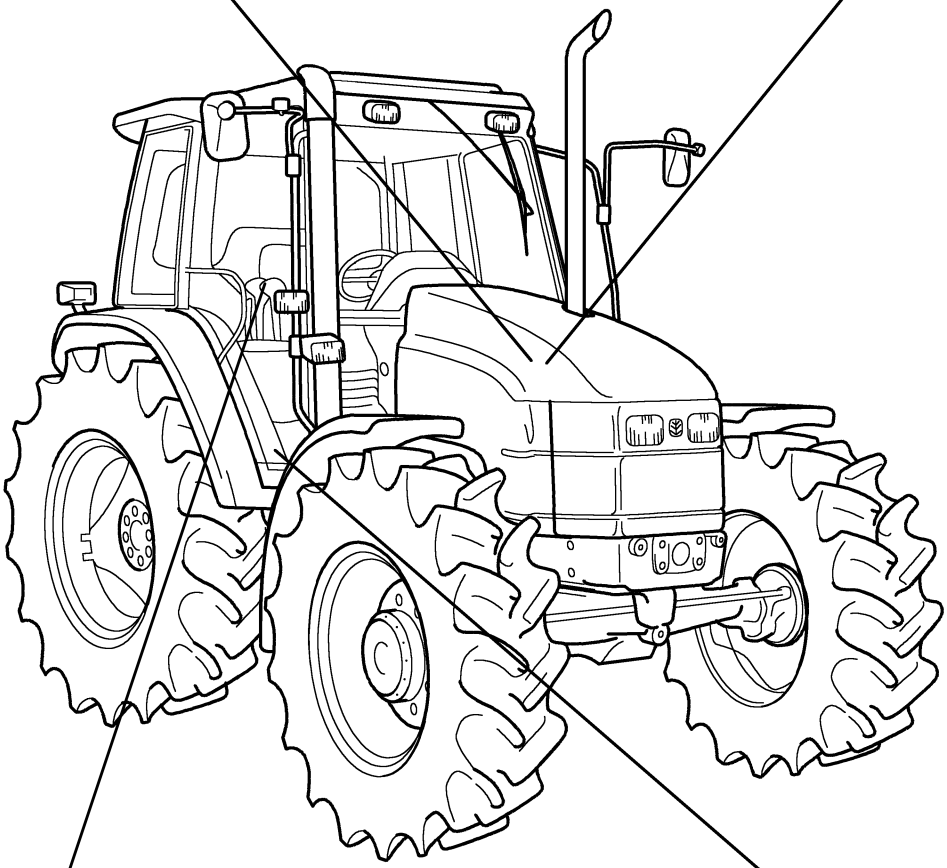

29. Upshift/Downshift Buttons

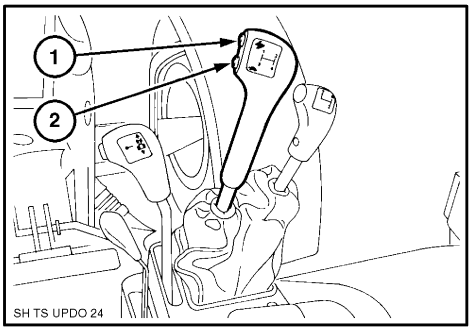

28. PWM Solenoid Valves

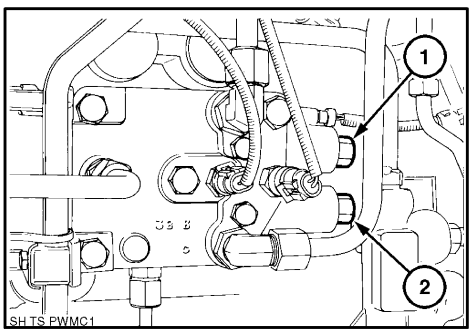

30. Differential Lock Micro Switch

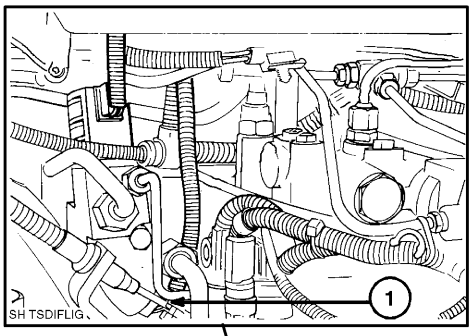

31. Differential Lock, PTO, Creep, 4WD & Dump Solenoids

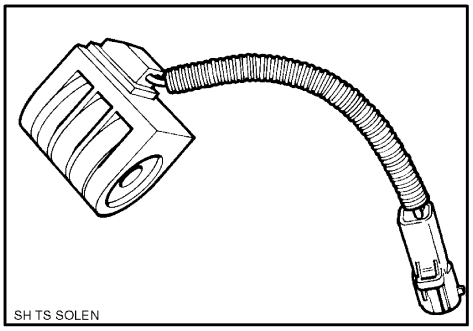

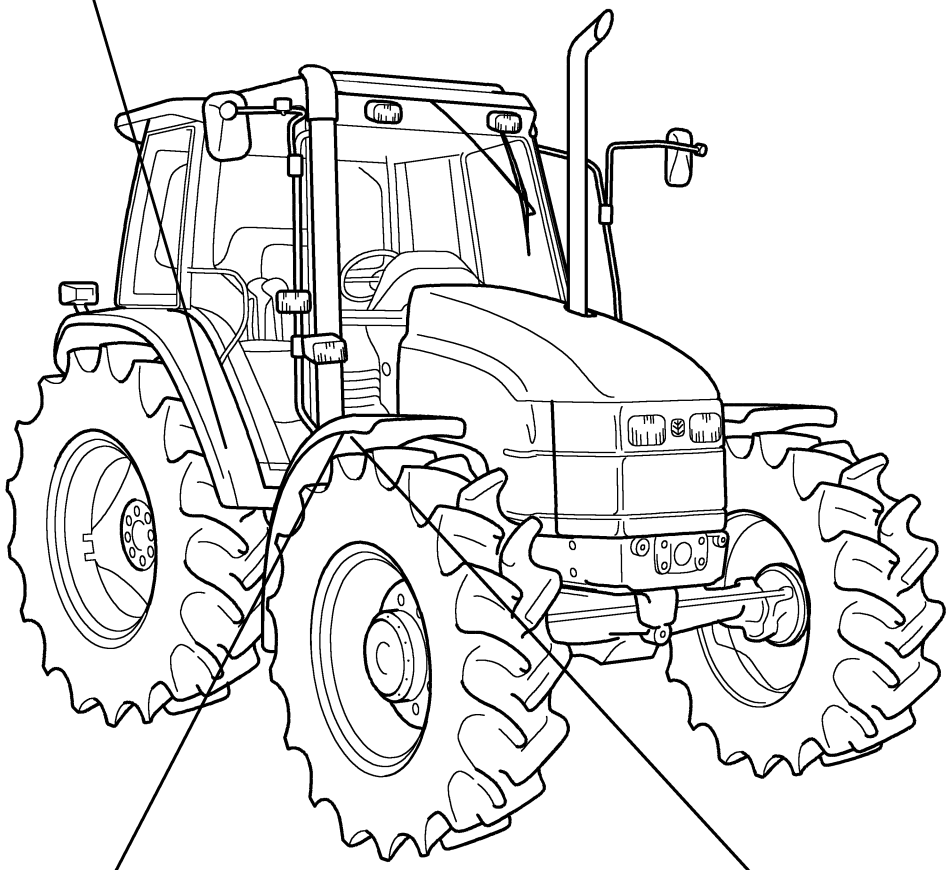

33. Transmission Status Switches

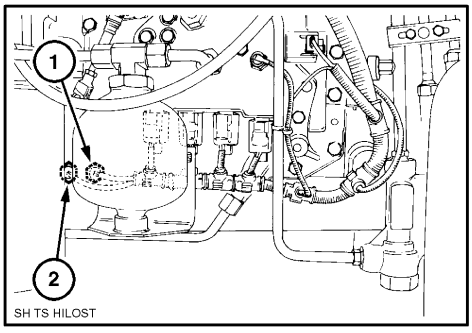

32. Transmission Oil Temperature Sensor

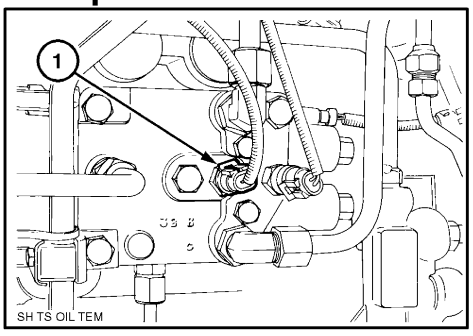

34. Multifunction Switch Lights

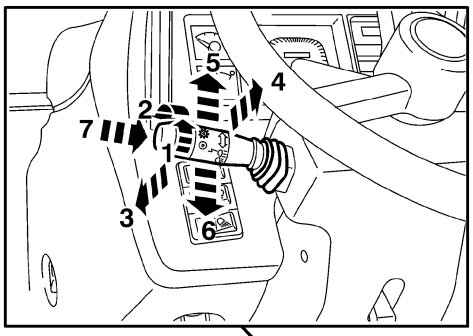

35. Multifunction Switch Wiper/Wash Switch

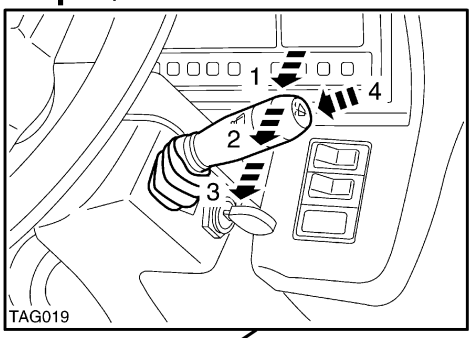

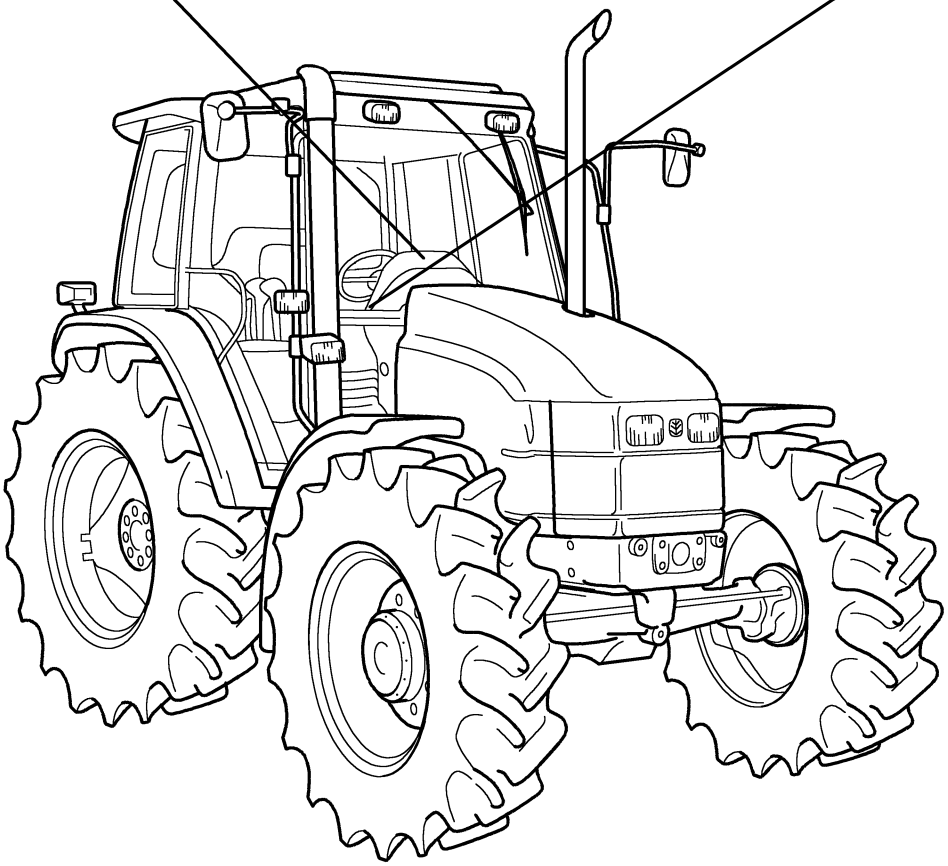

8x2	12x12	24x24	16x16
3	3	3	3

1. THERMOSTART DEVICE

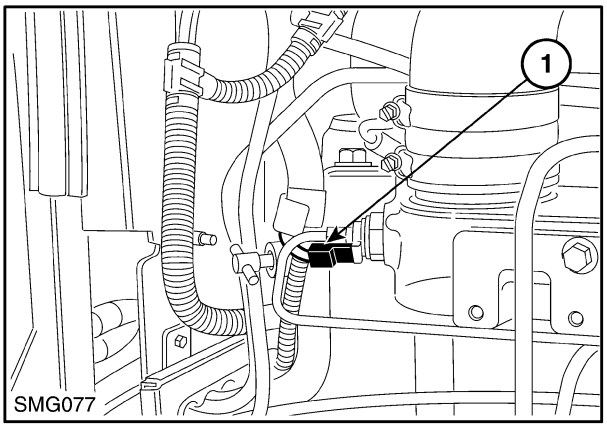

The thermostart which is efficient at ambient temperatures of -18° C, comprises a heating element fitted in the intake manifold. When the thermostart is switched on it ignites fuel in the manifold, thus heating the air before it enters the combustion chamber.

The thermostart is activated when the key is turned anti-clockwise. It is actioned for 15 seconds.

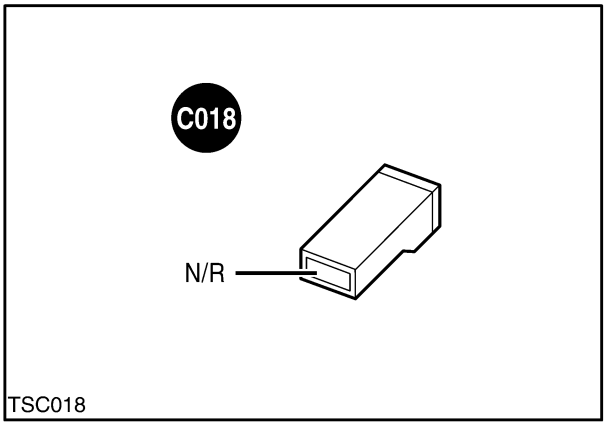

TEST PROCEDURE

Voltage

Turn the ignition key to the thermostart position. **12V** between the **BROWN** / **RED** wire and **EARTH** (for 15 seconds only).

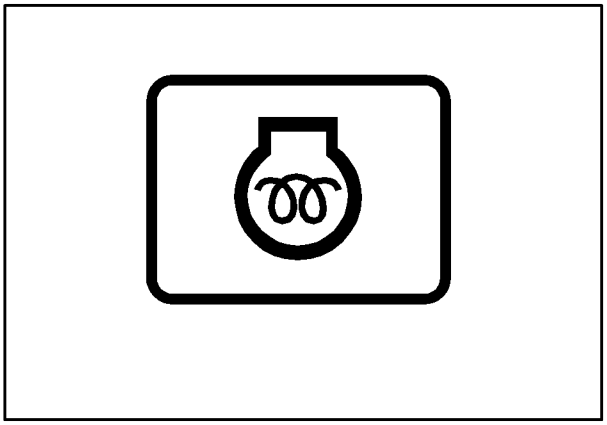

OPERATIONAL LIGHT

8x2	12x12	24x24	16x16
3	3	3	3

2. COOLANT TEMPERATURE SENDER

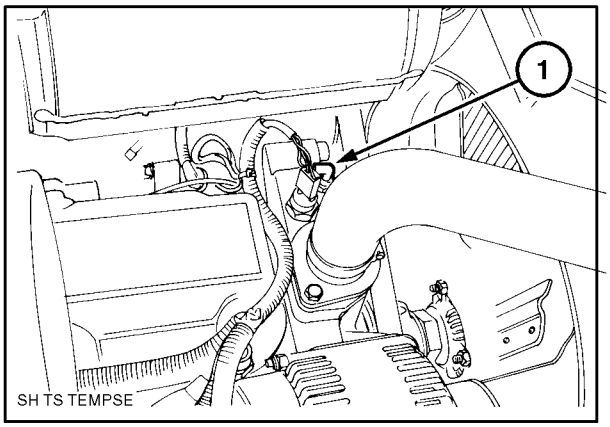

The resistance of the temperature sender changes proportionally to the temperature of the coolant, which makes it possible to send a modulated voltage signal to the instrument cluster to operate the bar graph / temperature gauge.

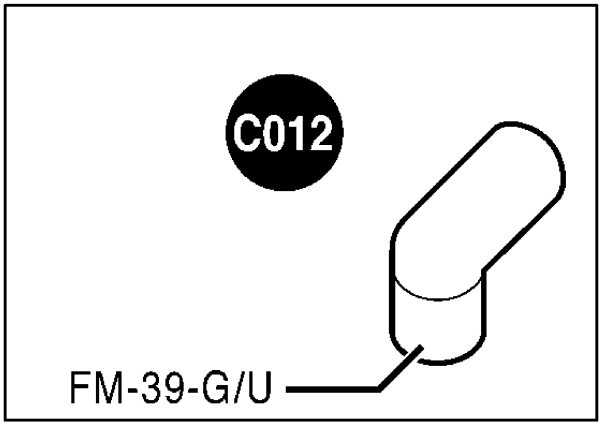

TEST PROCEDURE

Voltage

5V between the **GREEN** / **BLUE** wire and **EARTH**.

Resistance

4500-6000 Ω	Engine cold
Less than 650 Ω	Engine hot

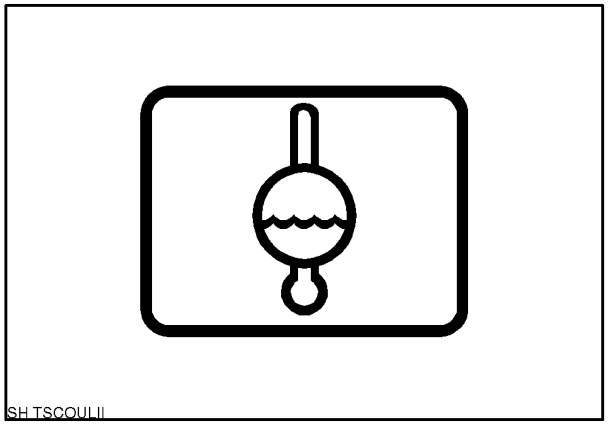

WARNING LAMP

ASSOCIATED ERROR CODES

EIC	7	Sender Short Circuit
EIC	12	Sender Open Circuit

8x2	12x12	24x24	16x16
3	3	3	3

3. ENGINE OIL PRESSURE SWITCH

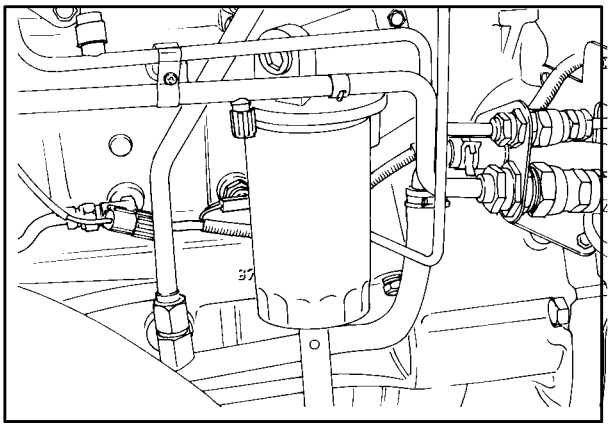

If the engine oil pressure drops below 0.68 bar, the warning lamp is illuminated.

As the switch is a normally open type, the warning lamp is illuminated when the ignition is switched on and the engine is not running.

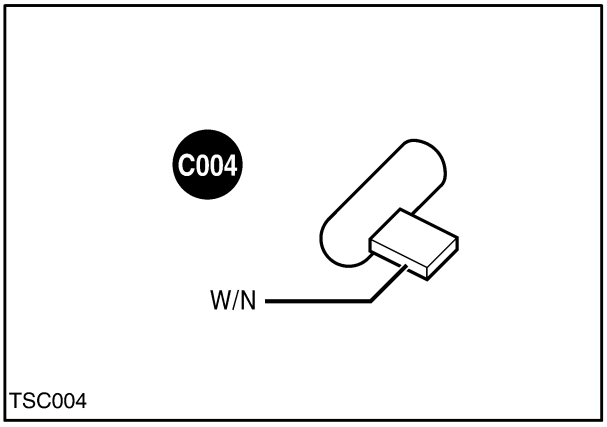

TSC004

TEST PROCEDURE

Voltage

12V between the **BROWN** / **WHITE** wire and **EARTH**.

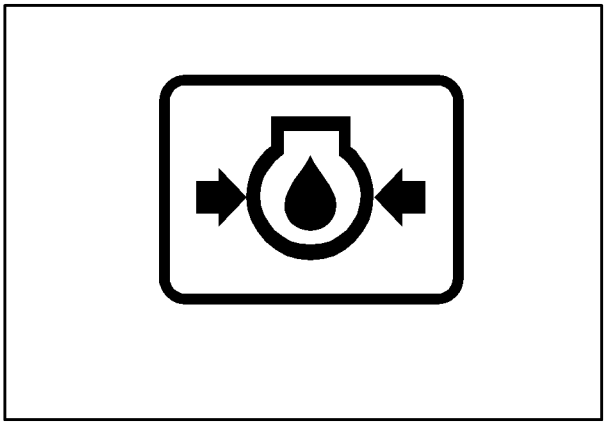

WARNING LAMPS

8x2	12x12	24x24	16x16
		EIC	EIC

4. ENGINE OIL PRESSURE SENDER

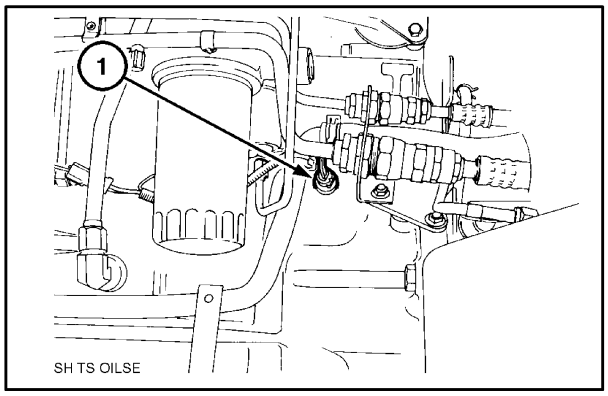

The resistance of the oil pressure sender varies proportionally with the engine oil pressure, which makes it possible to send a modulated voltage signal to the instrument cluster to operate the engine oil pressure bar graph (EIC only).

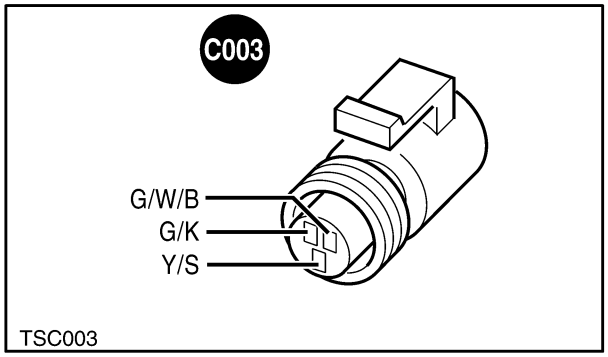

TEST PROCEDURE

Voltage

5V between the **GREEN** / **PINK** wire and **EARTH**.

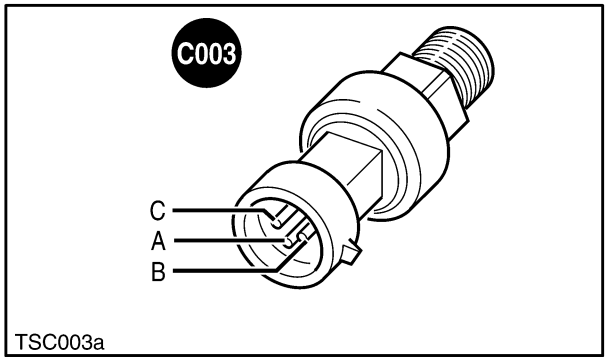

Resistance

- Between pins A and B 26 k Ω
- Between pins B and C 34 k Ω
- Between pins A and C 26 k Ω

Sensor Calibration

Display Segment	Sensor Volts	Display Segment	Sensor Volts
1	less than 1.47	7	2.93 – 3.22
2	1.47 – 1.76	8	3.22 – 3.51
3	1.76 – 2.06	9	3.51 – 3.81
4	2.06 – 2.35	10	3.81 – 4.10
5	2.35 – 2.64	11	4.10 – 4.39
6	2.64 – 2.93	12	4.39 – 4.83

Alarm function pressure will vary with engine rpm

Sensor		***RPM***	***Alarm***
Volts	*Bar*	*Less than 500*	*OFF*
1.47	*0.6*	*500 – 1500*	*ON*
1.76	*1.1*	*1500 – 2000*	*ON*
2.06	*1.7*	*2000 – 3000*	*ON*

ASSOCIATED ERROR CODES

EIC 1 Sender Short Circuit
EIC 2 Sender Open Circuit

8x2	12x12	24x24	16x16
3	3	3	3

5. ALTERNATOR

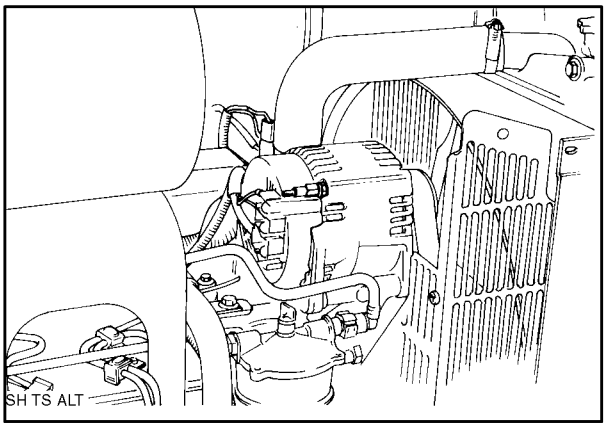

This sends a square wave signal, the frequency of which varies between 142.5 and 855 Hz (480–3060 rpm) to the microprocessor and to the instrument panel.

TEST PROCEDURE

With the engine running, the warning light should go out. If not, disconnect the wire connected to the terminal D+. When D+ is not connected and the warning light goes out, there is a fault with the alternator. If it does not go out, then check the wiring loom for a short to earth between D+ cable and the warning light.

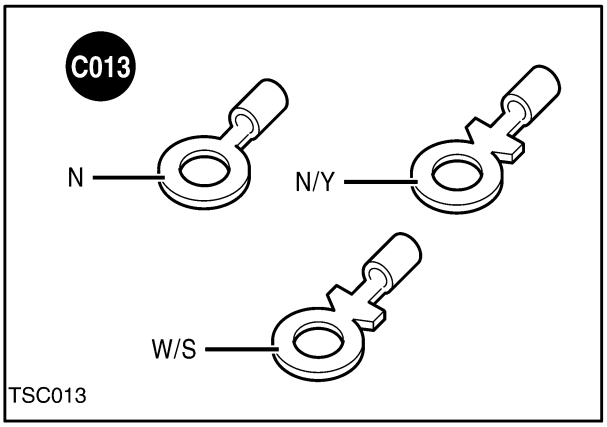

READING THE FREQUENCY (AT TERMINAL W, WHITE / SLATE WIRE)

ENGINE SPEED (RPM)	FREQUENCY (Hz)
1000	300
1500	430
2000	560
2300	660

8x2	12x12	24x24	16x16
3	3	3	3

6. AIR FILTER RESTRICTION SWITCH

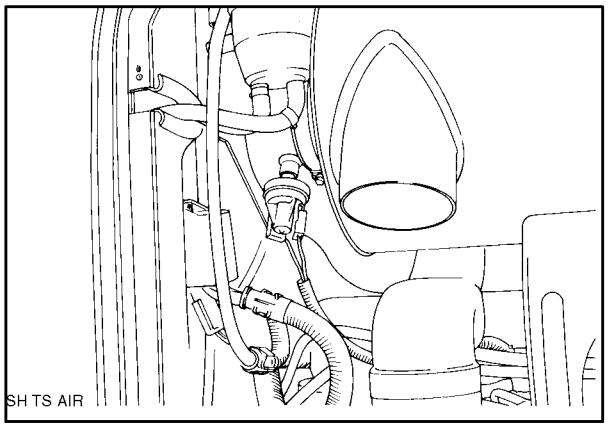

The warning lamp will illuminate when the switch has been closed for 5 seconds.

When the vacuum pressure on the engine side of the air intake filter exceeds 46.7 mm Hg, the warning lamp is illuminated. This is a normally open switch.

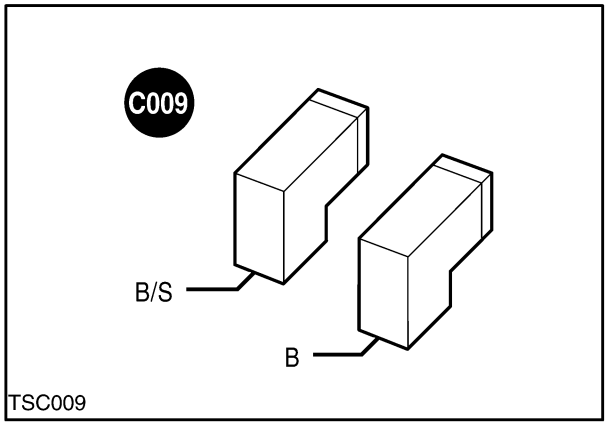

TEST PROCEDURE

Voltage

12V between the **BLACK** / **GREY** and **BLACK** wires.

Checking the Switch

Removing the rubber plug and pressing against the bottom of the switch with a suitable probe, should cause the switch to close.

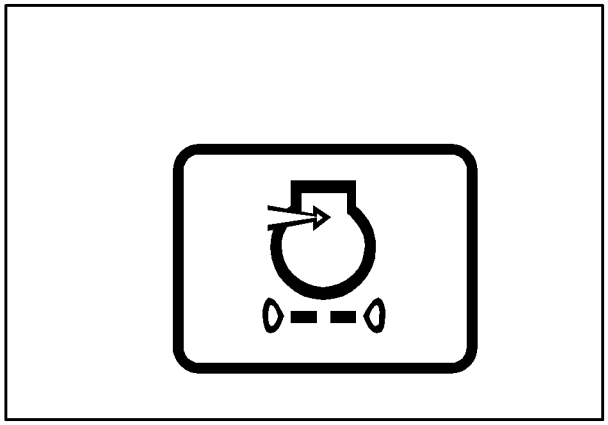

WARNING LAMPS

8x2	12x12	24x24	16x16
	3	3	3

7. BRAKE FLUID LEVEL SWITCH

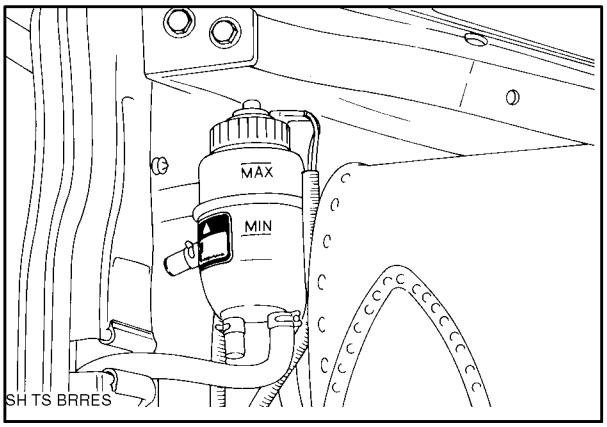

When the fluid level drops below the minimum level, a warning lamp is illuminated intermittently. This is a normally open switch.

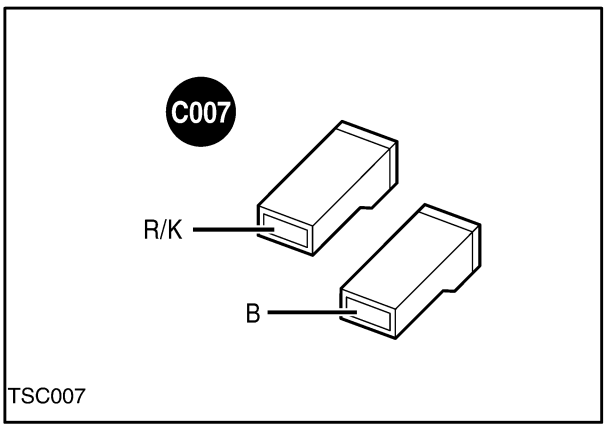

TEST PROCEDURE

Voltage

Handbrake Off. **12V** between the **RED** / **PINK** and the **BLACK** wires.

Resistance

If the level is correct, resistance is infinite.

If the level is too low, there is continuity.

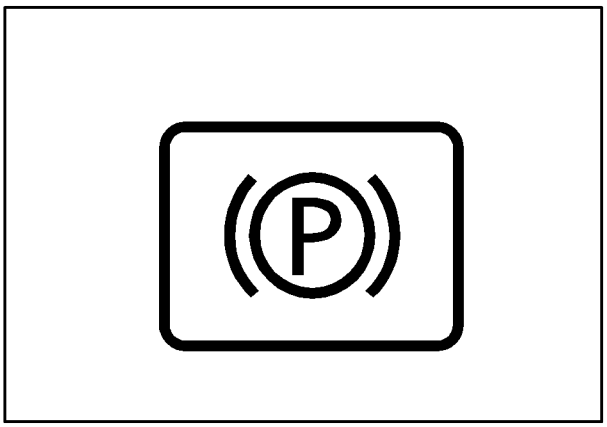

WARNING LAMPS

8x2	12x12	24x24	16x16
	3	3	3

8. FUEL INJECTION PUMP

The emissionised Fuel Injection Pump (FIP) has an electric lift pump, a temperature related switch, a wax motor and a shut-off solenoid.

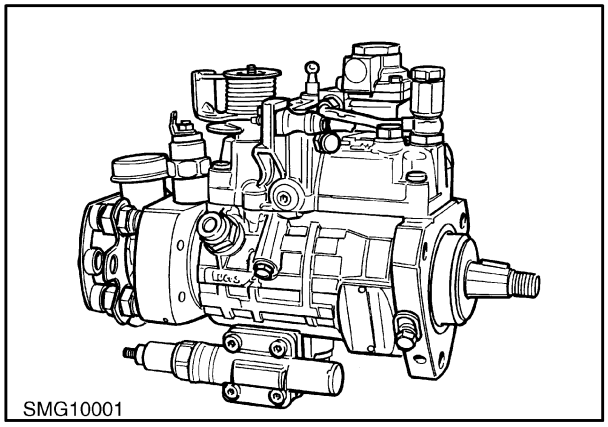
SMG10001

TEST PROCEDURE

Fuel Pump

Fuel pump resistance 1.6Ω across the two wires, **BLACK** and **PURPLE** / **YELLOW**.

12 V PURPLE / **YELLOW** to **EARTH**.

Temperature Switch

The temperature switch is normally open when cold and closed when hot. Supply voltage of **12V** at the **PURPLE** / **YELLOW**.

Wax Motor

The wax motor has a typical resistance of 6Ω when cold and 10Ω when hot.
Voltage of **12V** when engine is hot and the temperature switch closed.

Shut-off Solenoid

Receives	12 volts with ignition on
Resistance	9Ω

8x2	12x12	24x24	16x16
	3	3	3

9. HAND BRAKE SWITCH

When the handbrake has been applied, the switch will be closed and the warning lamp is illuminated.

An alarm will be triggered if wheel movement of more than 0.8 km/h is detected when the handbrake has been applied and the ignition is switched on.

This alarm is also activated for 2 minutes when the ignition has been switched off and the handbrake has not been applied.

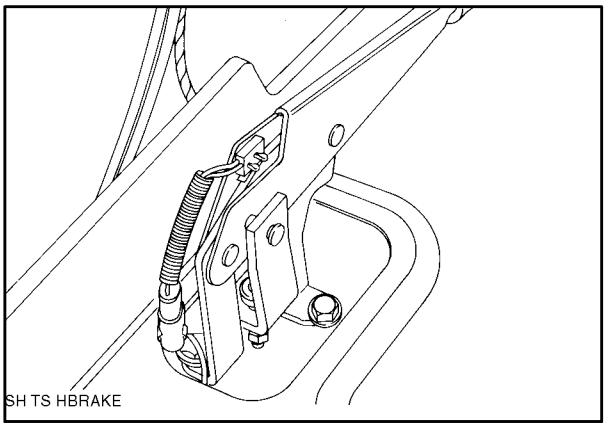

TSC136

TEST PROCEDURE

Voltage

12V at **RED** / **WHITE** to **EARTH**.

NOTE: *The orange and white wire (or blue on the side of the switch) is only connected where the "Italian" trailer braking system is fitted.*

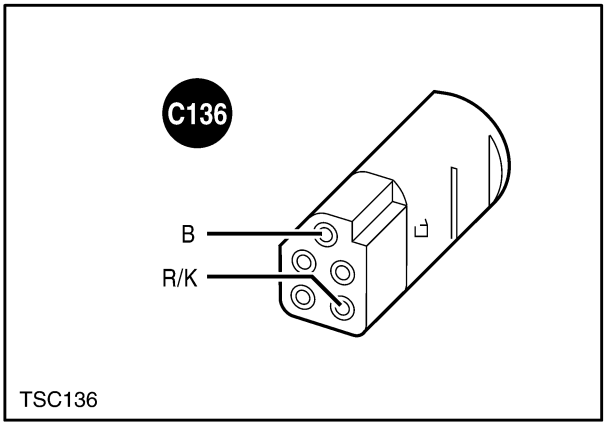

OPERATIONAL LIGHT

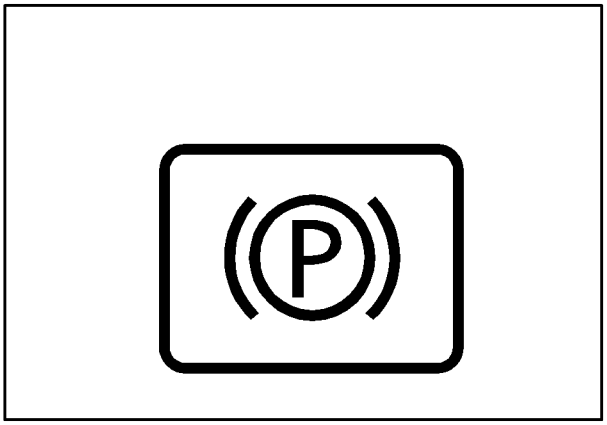

8x2	12x12	24x24	16x16
3	3	3	3

10. FUEL GAUGE SENDER

The signal from the fuel sender potentiometer determines the fuel level displayed on the instrument cluster gauge.

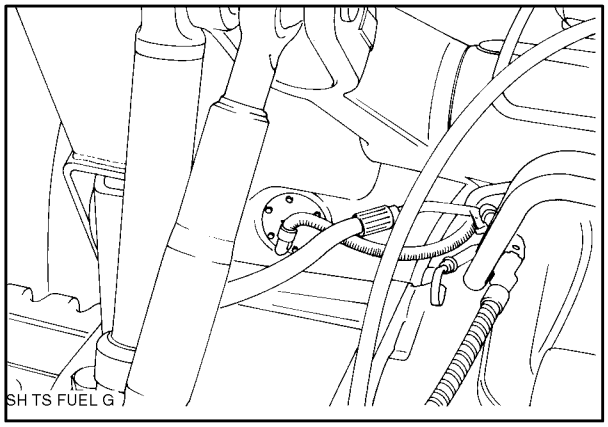

TEST PROCEDURE

Voltage

5V at red wire to earth.

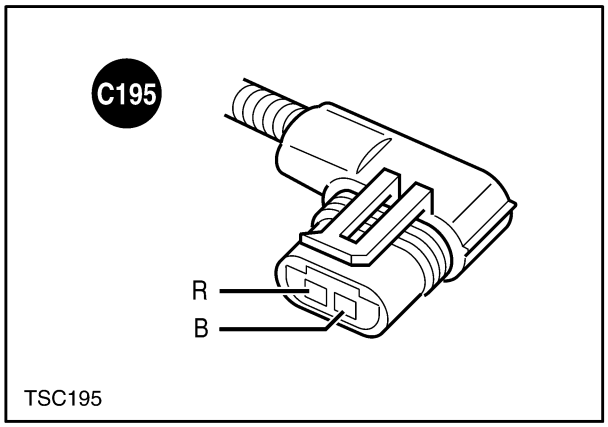

Resistance

TRANSMITTER RESISTANCE	GAUGE INDICATION
31 ± 5Ω 250 ± 20Ω	FULL EMPTY

ASSOCIATED ERROR CODES

EIC 3 Short circuit
EIC 4 Open circuit

8x2	12x12	24x24	16x16
	3	3	3

11. LOW TRANSMISSION OIL PRESSURE SWITCH

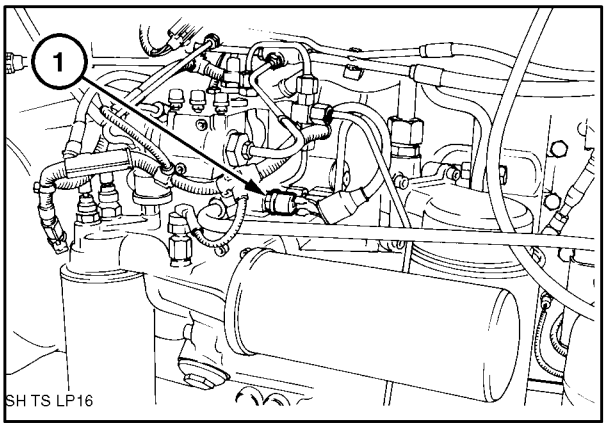

If the transmission oil pressure drops below **11 bars**, the warning lamp will be illuminated. This is a normally closed pressure switch.

When there is no pressure in the system, contact is made between the two terminals of the switch.

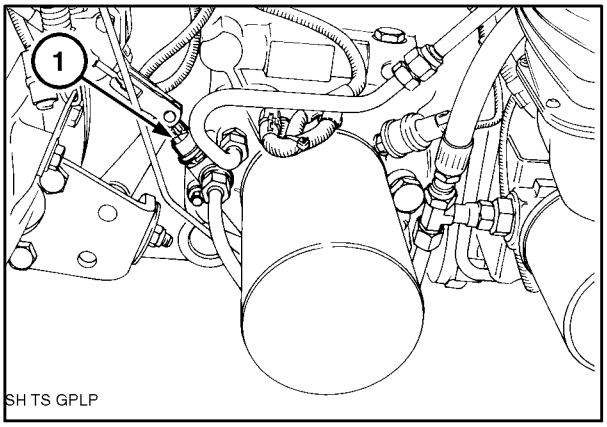

TEST PROCEDURE

Voltage

12V between the **YELLOW** / **RED** and **BLACK** wires.

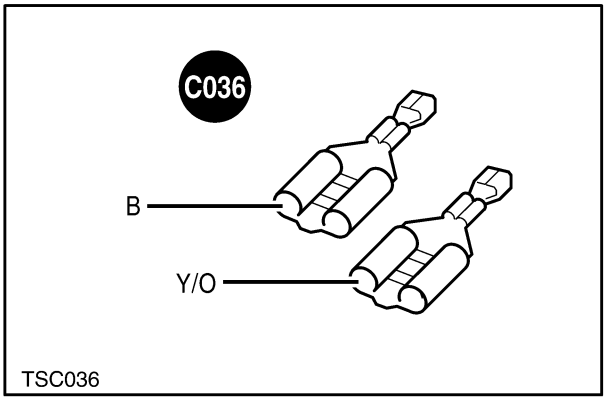

WARNING LAMPS

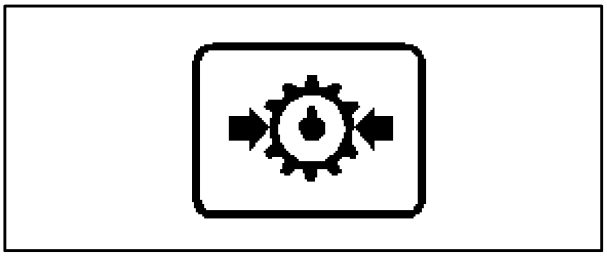

8x2	12x12	24x24	16x16
3	3	3	3

12. OIL FILTER RESTRICTION SWITCH

When the temperature is greater than **40° C** and when the suction pressure on the pump side of the filter exceeds 406 mm Hg (5812 mm H_2O), the vacuum switch illuminates the warning lamp. This is a normally open switch.

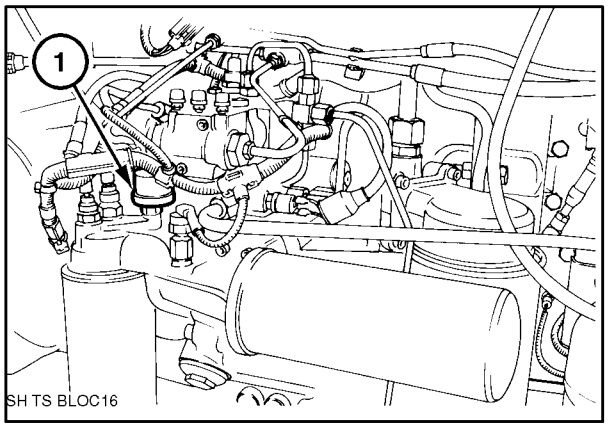

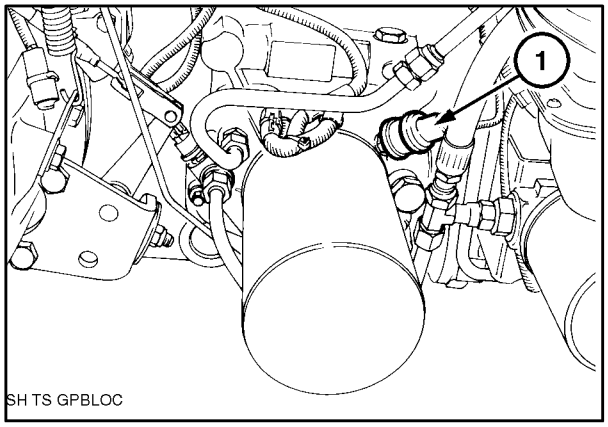

TEST PROCEDURE

Voltage

When the **40° C** temperature switch is closed circuit, i.e. greater than **40° C**, or shorted out.

12V between the **BLACK** / **BROWN** wires and **EARTH**.

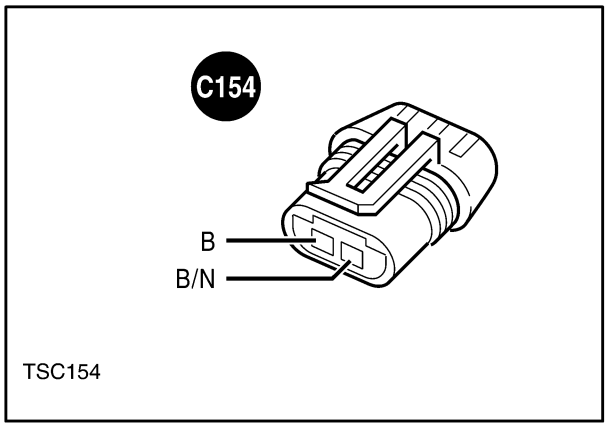

WARNING LAMPS

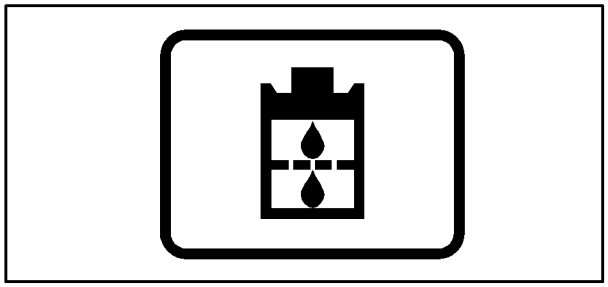

8x2	12x12	24x24	16x16
	3	3	3

13. 40°C SWITCH (OIL TEMPERATURE)

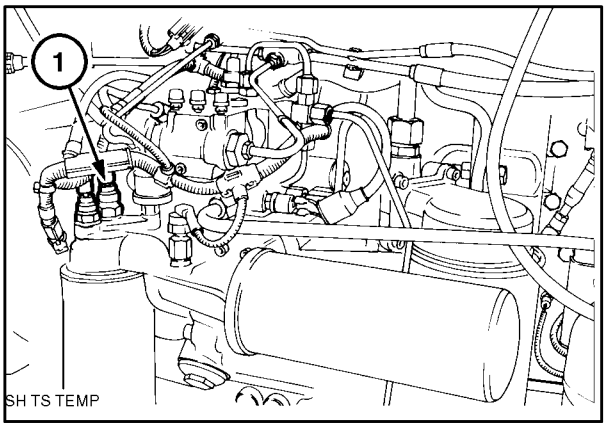

When the transmission oil temperature exceeds **40° C**, this switch (1) enables the oil filter restriction switch. This is a normally open thermocontact.

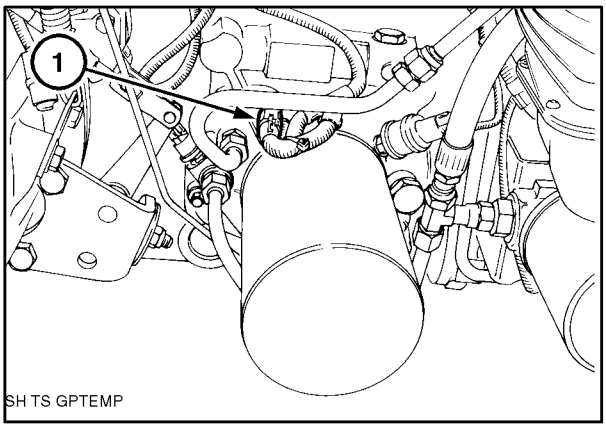

TEST PROCEDURE

To check the switch, submerge it in oil. If the temperature of the oil is in excess of **40° C**, the switch should close and there should be continuity between the two terminals.

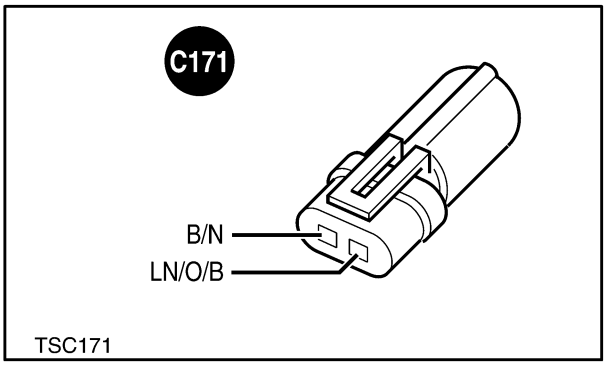

WARNING LAMPS

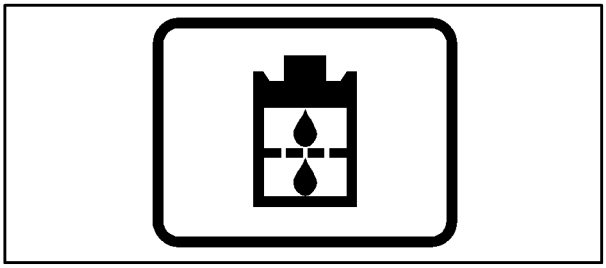

8x2	12x12	24x24	16x16
			3

14. LOW CHARGE PRESSURE SWITCH

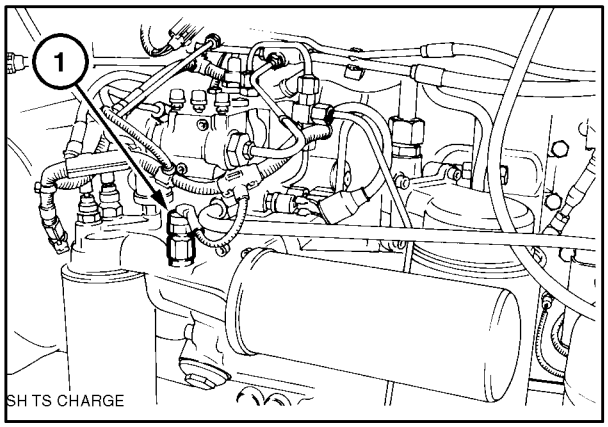

If the charge pressure drops below **0.8 BAR**, it will cause the warning lamp to flash. The warning lamp will flash when the switch has been closed for **5 SECONDS**. This is a normally closed switch.

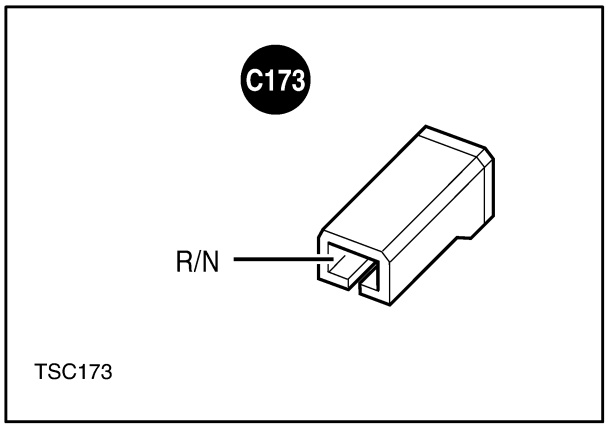

TEST PROCEDURE

Voltage

The voltage measured between **RED** / **BROWN** wires and **EARTH** should be **12V**.

Pressure Switch

Contact must be established between the connection socket (earth) and the pressure switch.

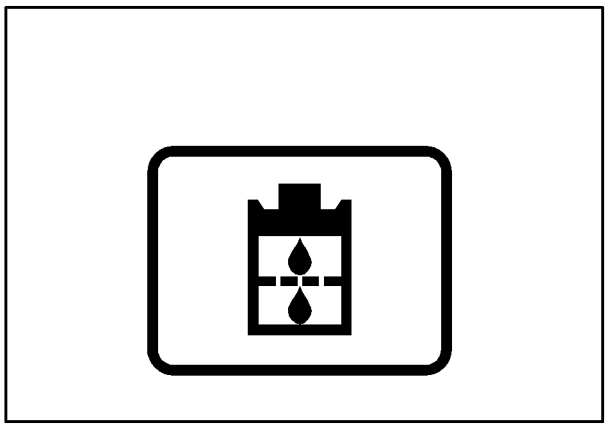

WARNING LAMPS

8x2	12x12	24x24	16x16
		EIC	EIC

15. RADAR

This detects the forward speed of the tractor and sends a signal to the instrument cluster to display the tractors speed, the percentage of wheel slip, the distance and the cumulative total area worked.

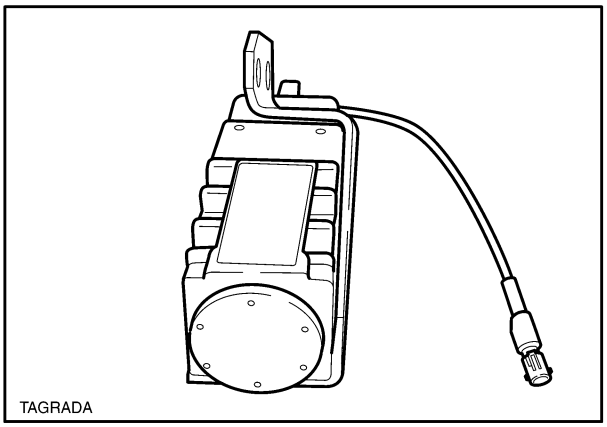
TAGRADA

TEST PROCEDURE

Voltage

Harness side

1 : Earth
2 : Frequency Signal
3 : Supply Voltage
4 : Radar Diagnostics

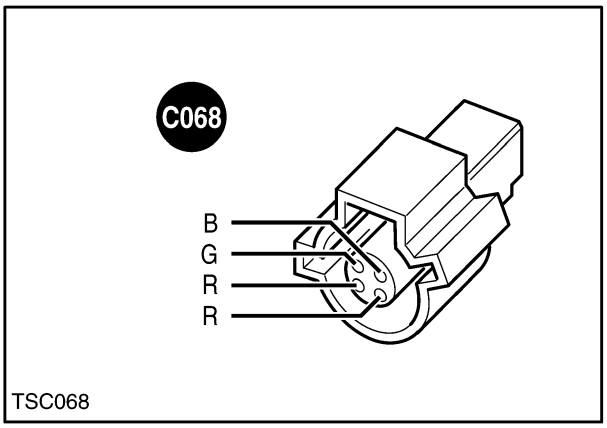

TSC068

Relationship Between Frequency and Speed

Values must be read between the green wire and earth.

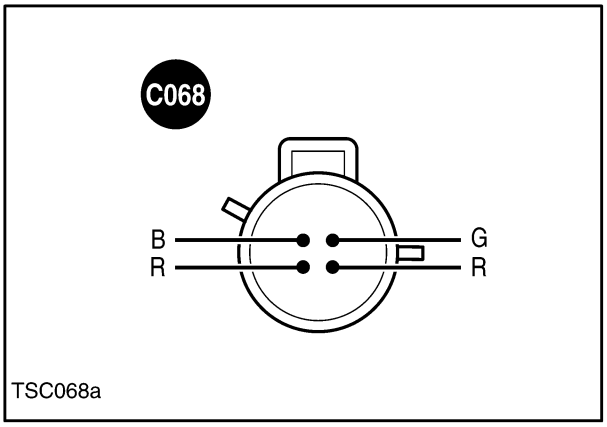

TSC068a

FREQUENCY Hz	SPEED km/h	SPEED m/h
0	0	0
550	15	9.3
1100	30	18.7

ASSOCIATED ERROR CODES

EDC 2 Poor or no signal from tractor performance monitor radar

EDC 3 Transmission output speed sensor or tractor performance monitor radar circuit intermittent failure.

8x2	12x12	24x24	16x16
		EDC	EDC

16. LOAD SENSING PINS

- 50 kN pins

- The fixing flange ensures correct pin orientation

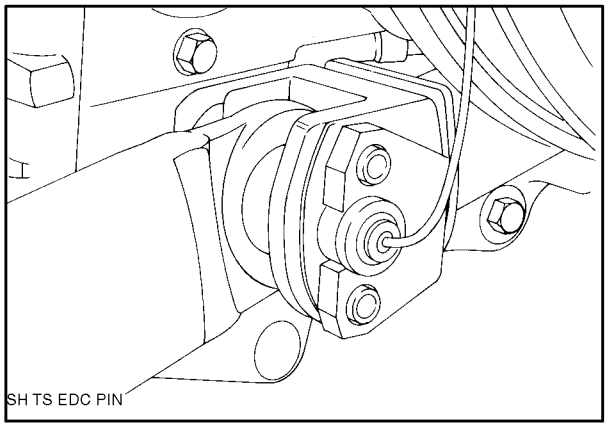

TEST PROCEDURE

Resistance

1 to 2 177 kΩ
1 to 3 8.9 kΩ
2 to 3 177 kΩ

Voltage

8V at pin 1, **PINK** wire to **EARTH**.

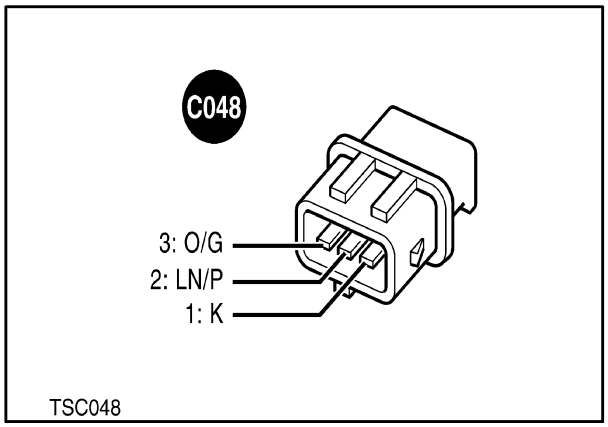

ASSOCIATED ERROR CODES

EDC 14 Right hand load sensing pin failure/circuit open or shorted to chassis.

EDC 15 Right hand load sensing pin failure/circuit shorted to chassis.

EDC 16 Left hand load sensing pin failure/circuit open or shorted to chassis.

EDC 17 Left hand load sensing pin failure/circuit shorted to chassis.

EDC 18 Both load sensing pins disconnected or open load sensing pin circuit.

EDC 19 Load sensing pin supply voltage shorted to ground.

EDC 20 Load sensing pin supply voltage shorted to battery.

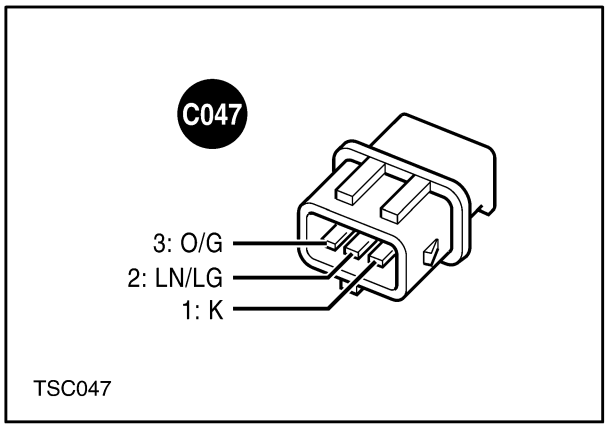

8x2	12x12	24x24	16x16
		EDC	EDC

17. LIFT LEVER POTENTIOMETER

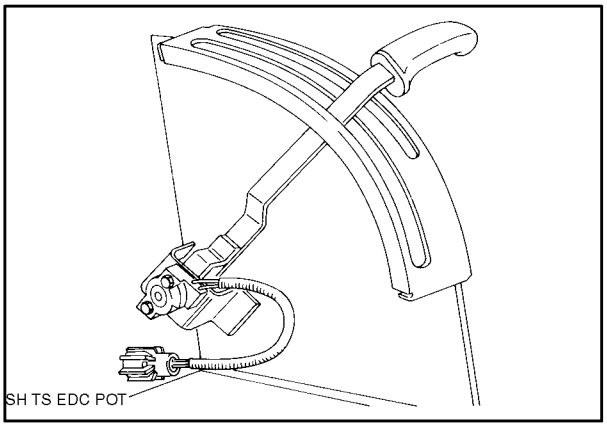

- The resistance of the potentiometer changes as the lever is moved.
- Its signal is continuously monitored by the microprocessor.

TEST PROCEDURE

Voltage

Black : Earth
Brown : 5.3V (Ignition ON)
Orange/Black: Nothing

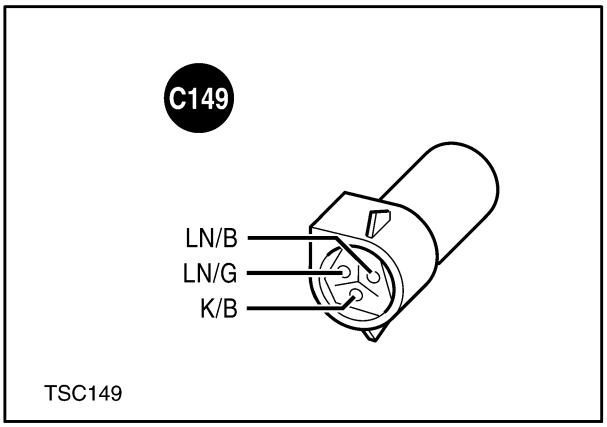

Resistance

Wire	Lever Forward	Lever Rearward
Black to Green	0.5 kΩ	3.6 kΩ
Black to Orange	4.0 kΩ	4.0 kΩ
Orange to Green	3.6 kΩ	0.3 kΩ

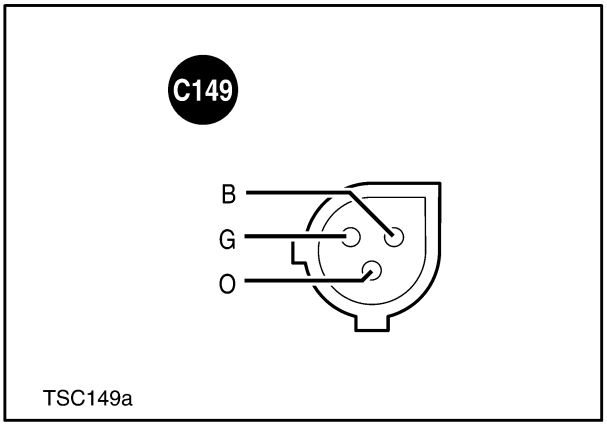

ASSOCIATED ERROR CODES

EDC 25 Lift control lever potentiometer disconnected or circuit open or shorted to chassis.

EDC 26 Lift control lever potentiometer failure or circuit shorted to supply voltage.

8x2	12x12	24x24	16x16
		EDC	EDC

18. LIFT ARM (CROSS SHAFT) POTENTIOMETER

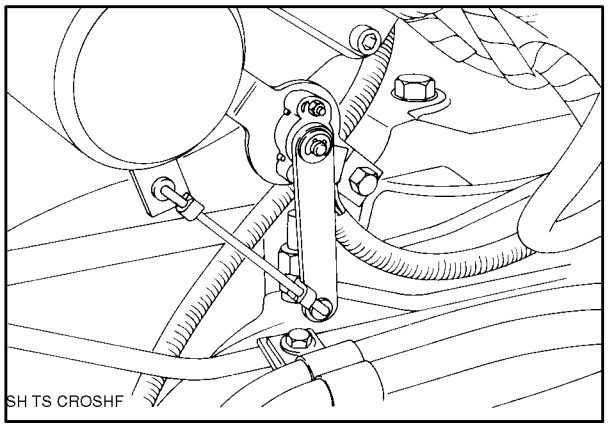

- Mounted on the lift arm
- Informs the microprocessor of the lift arm position.

TEST PROCEDURE

Resistance

Wire	Arms Lowered	Arms Raised
Black to Green	0.8 kΩ	3.58 kΩ
Green to Orange	3.28 kΩ	0.49 kΩ
Orange to Black	3.5 kΩ	3.5 kΩ

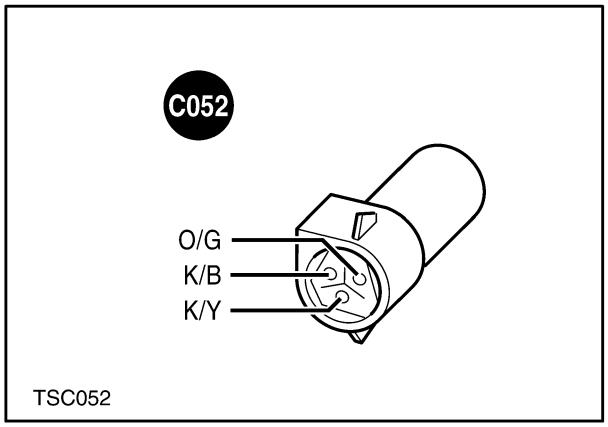

Voltage

PINK / **BROWN** wire to earth **5V**.

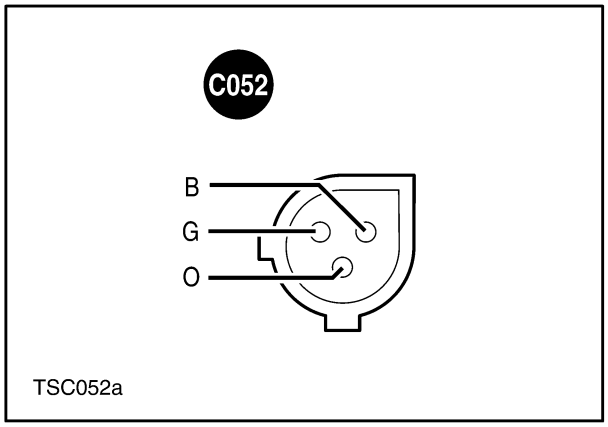

ASSOCIATED ERROR CODES

EDC 24 Perform hydraulic lift auto calibration.

EDC 27 Lift arm position sensing potentiometer failure, disconnected, open circuit or circuit shorted to chassis.

EDC 28 Lift arm position sensing potentiometer failure, or circuit shorted to supply voltage.

8x2	12x12	24x24	16x16
		EDC	EDC

19. ELECTRONIC DRAFT CONTROL (EDC) SOLENOIDS

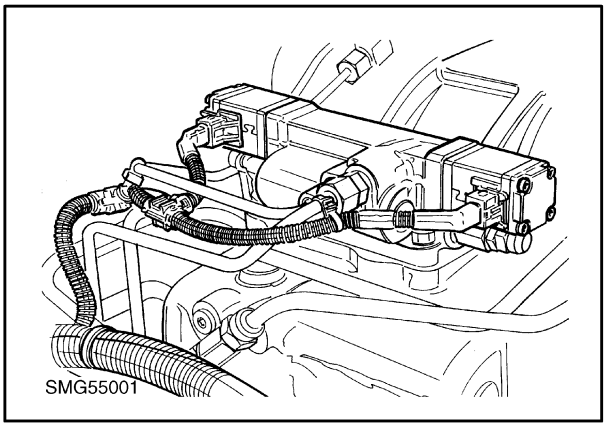

TEST PROCEDURE

Resistance

The resistance of each of the solenoids should be between **6** and **8** Ω.

Frequency

The signal frequency should be **83** Hz. This is difficult to measure with conventional test equipment.

Voltage/Intensity

The average voltage, amperage and cyclic ratio change in relation to the control instructions.

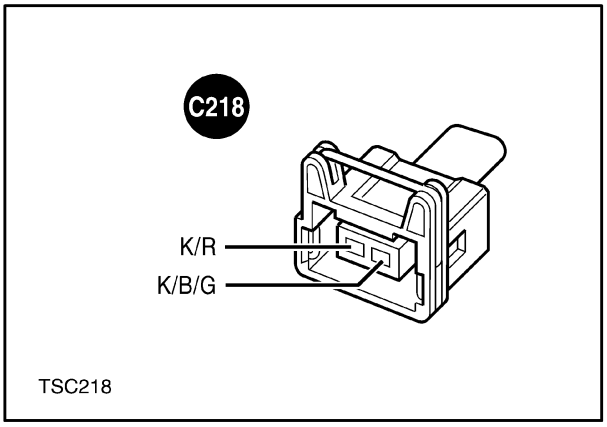

ASSOCIATED ERROR CODES

EDC 63 EDC hydraulic control valve lower solenoid/circuit failed.

EDC 64 EDC hydraulic control valve raise solenoid/circuit failed.

EDC 65 EDC hydraulic control valve lower solenoid/circuit failed.

EDC 66 EDC hydraulic control valve raise solenoid/circuit failed.

EDC 67 EDC hydraulic control valve supply voltage too low.

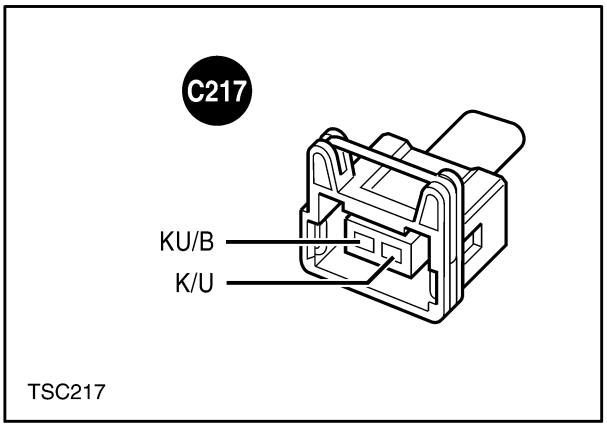

8x2	12x12	24x24	16x16
		EDC	EDC

20. ELECTRONIC DRAFT CONTROL PANEL

Potentiometer Connector (C120)

Voltage Check

5V between **LIGHT BROWN** and **EARTH**
12V between **RED/LIGHT GREEN/BLACK** and **EARTH**

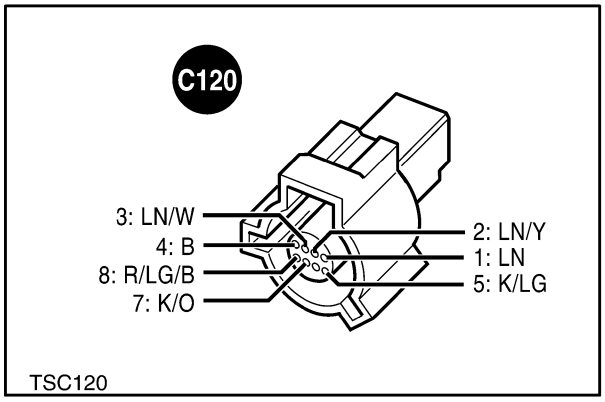

Slip Connection (C121)

No voltage is present from loom.

Resistance

Panel connector – see table for typical approximate values.

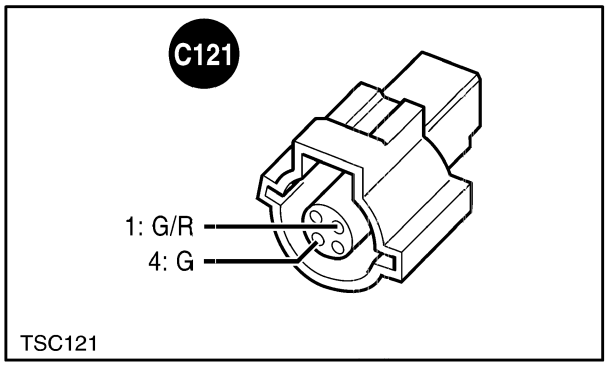

Panel Light Connector (C122)

Voltage when EDC solenoids function.

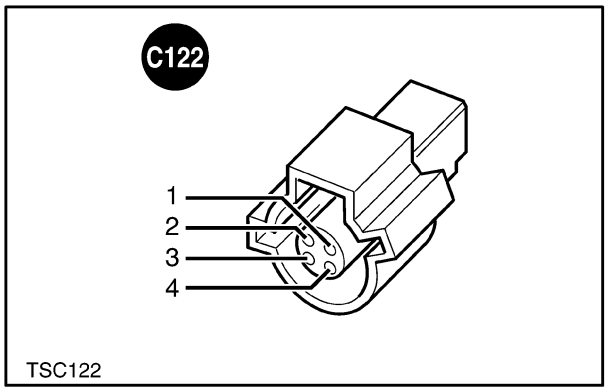

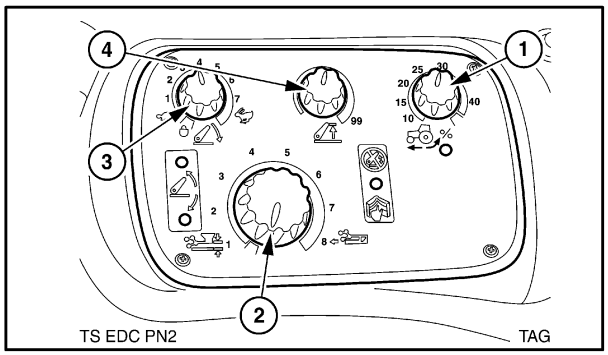

ASSOCIATED ERROR CODES

EDC 2 Poor or no signal from tractor performance monitor radar.

EDC 6 Slip control potentiometer failure, open circuit or shorted to chassis.

EDC 7 Slip control potentiometer failure or circuit shorted to supply voltage.

EDC 10 Height limit control potentiometer/circuit - open circuit or shorted to chassis.

EDC 11 Height limit control potentiometer/circuit shorted to supply voltage.

EDC 12 Drop rate control potentiometer/circuit - open circuit or shorted to chassis.

EDC 13 Drop rate control potentiometer/circuit shorted to supply voltage.

EDC 21 Position/draft control sensitivity control potentiometer/circuit - open circuit or shorted to chassis.

EDC 22 Position/draft control sensitivity control potentiometer/circuit shorted to supply voltage.

EDC 30 Circuit failure to EDC control panel.

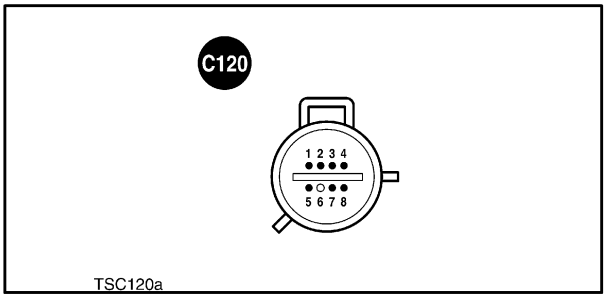

TSC120a

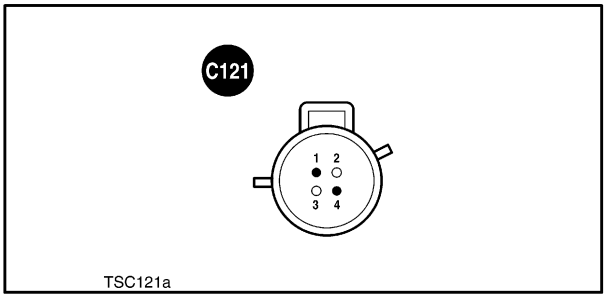

TSC121a

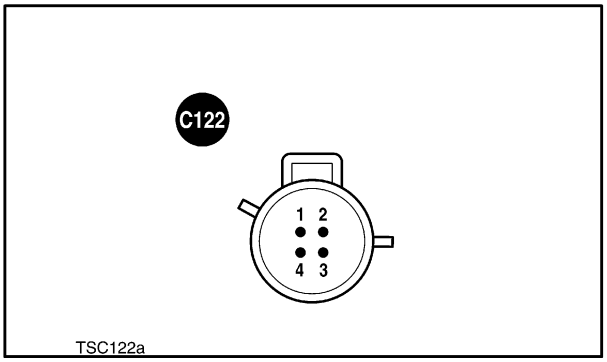

TSC122a

EDC Panel Potentiometer and Printed Circuit Board Check, With and Less Slip

EDC Panel Connecting, Pin No.	EDC Panel Connection, Pin No.	Potentiometer	Typical Resistance Ω Potentiometer Setting Anti-clockwise - Clockwise	
C120, 1	C121, 1	Slip (1)	333+/-10	95+/-10
C120, 1	C120, 2	Drop Rate (3)	333+/-10	95+/-10 W/Slip
			418+/-10	95+/-10 L/Slip
	C120, 3	Draft Position	333+/-10	95+/-10 W/Slip
		Mix (2)	418+/-10	95+/-10 L/Slip
	C120, 5	Height (4)	333+/-10	95+/-10 W/Slip
			505+/-15	180+/-10 L/Slip
C120, 1	C120, 4	-	341+/-100 W/Slip	
			455+/-100 L/Slip	
C120, 5	C120, 8	Read Manual Light	13+/-5	
C121, 3	C120, 5	Slip Light	14+/-5	
	C120, 8	Slip and Read Manual Light	27+/-5	
C122, 1	C122, 2	Up light	13+/-5	
C122, 3	C122, 4	Down Light	13+/-5	

8x2	12x12	24x24	16x16
	3	3	3

21. PTO SWITCH

The PTO switching system incorporates a safety start function which takes a signal from the alternator when the engine is running.

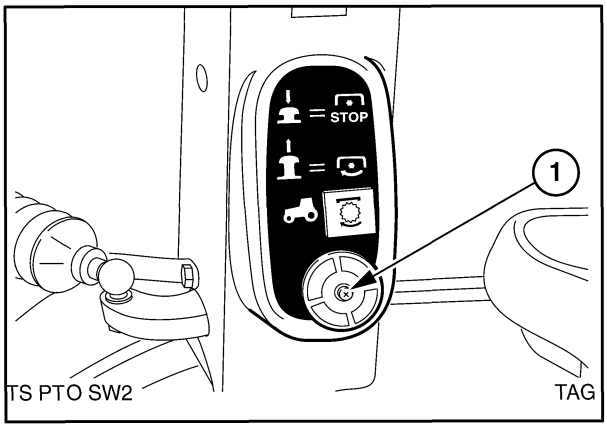

Voltage

Terminal	Ignition On	On PTO Running
A - O/B	0	0
B - R	0	12V
X - G/R	12V	12V
X - G/R	12V	12V

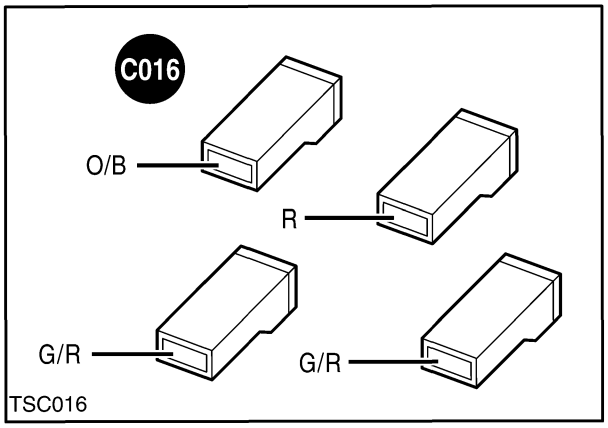

Switch Continuity

PTO Switch Off	X to X
Central button depressed momentarily	X to B
PTO On	X to X
PTO On	X to B

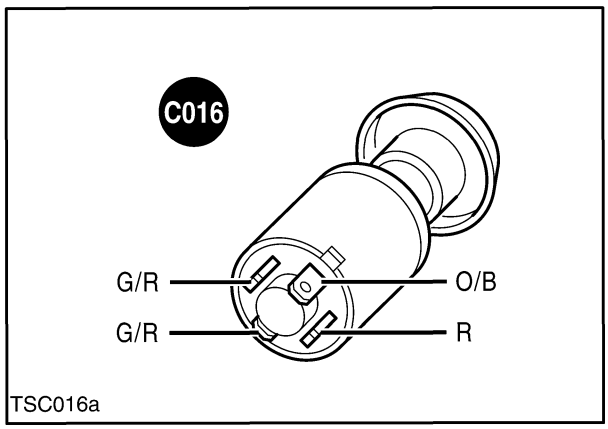

Operation Light

1000rpm.
Overspeed

8x2	12x12	24x24	16x16
		Processor	Processor

22. TRANSMISSION SPEED SENSOR

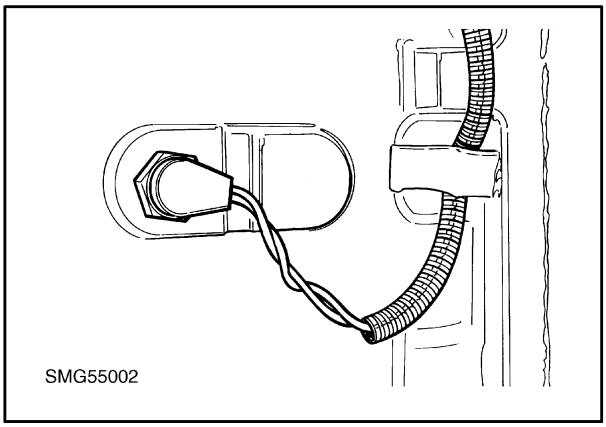

This sensor measures the output speed of the transmission.

If the tractor is fitted with a radar, the signal from the transmission speed sensor is used for the calculation of the percentage wheel slip.

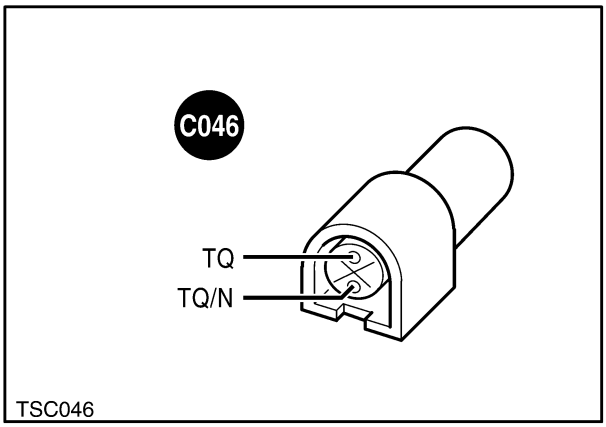

TEST PROCEDURE

Resistance

There should be a resistance of 2.5 kΩ across the sensor wires.

ASSOCIATED ERROR CODES

EIC 5 Short Circuit
EIC 6 Open Circuit
E 49 Wheel speed sensor open/short circuit
EDC 49 Wheel speed sensor open/short circuit
EDC 4 Transmission output speed sensor circuit intermittent failure
EDC 5 Transmission output speed sensor shorted to chassis.

8x2	12x12	24x24	16x16
	3	3	3

23. BRAKE PEDAL SWITCHES

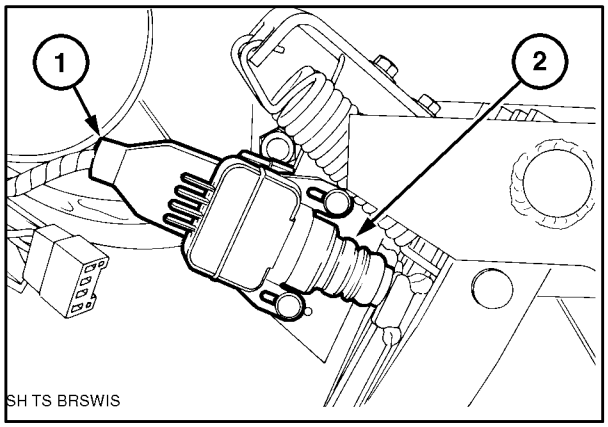

When either brake pedal is applied, the relevant switch closes, causing the appropriate brake light to illuminate. These switches, when closed, also send a signal to the processor for the operation of the four wheel drive and differential lock. This is a normally open switch.

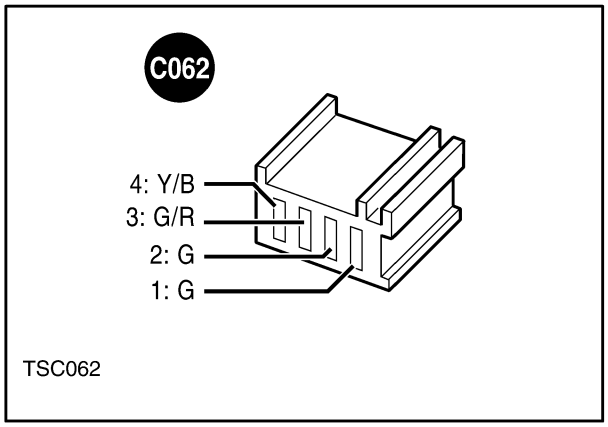

TEST PROCEDURE

Voltage

12V between both **GREEN** wires and **EARTH**.

Pedal up 1 and 4 have continuity
Pedal down 2 and 3 have continuity

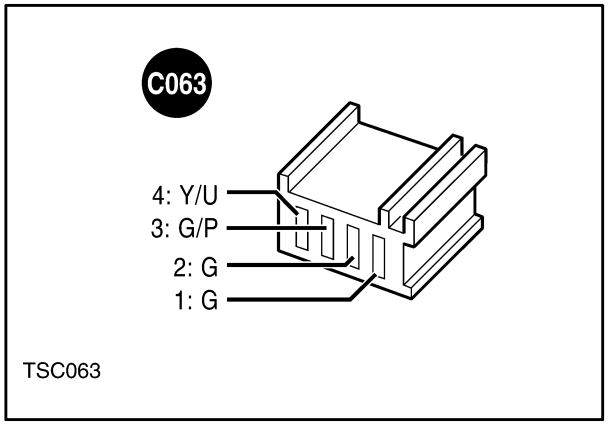

8x2	12x12	24x24	16x16
		3	3

24. FORWARD/REVERSE DUMP SWITCH

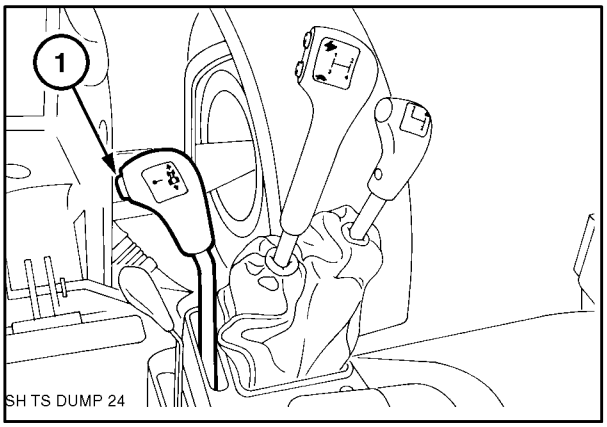

This is a sprung loaded to normally open switch, when pressed and held it becomes closed circuit.

TEST PROCEDURE

Voltage

RED/LIGHT GREEN/BLACK wire **12V** to **EARTH**.

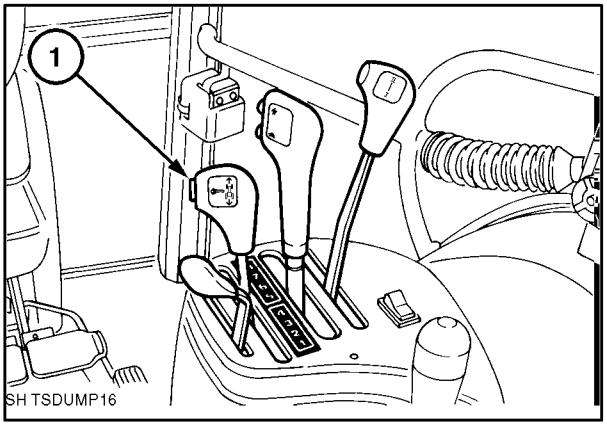

Switch Test

Continuity between **RED** and **GREEN** when switch depressed.

ASSOCIATED ERROR CODE

Transmission H

Clutchless shuttle operation attempted at too high a speed and in too high a gear

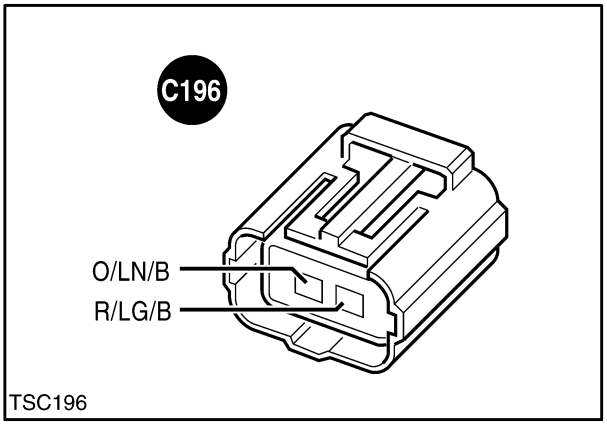

8x2	12x12	24x24	16x16
			3

25. 16x16 TRANSMISSION GEAR DISPLAY

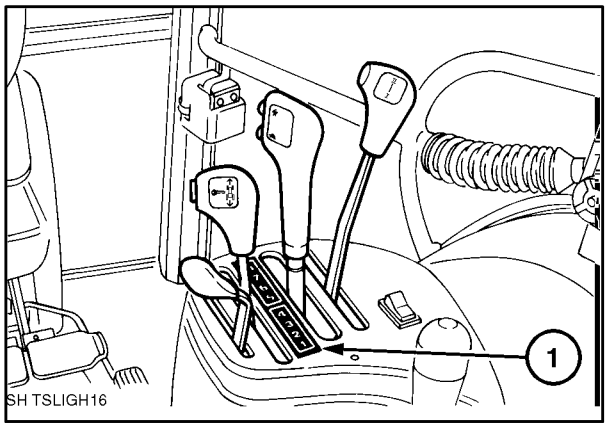

A set of lights numbered 1 to 8 indicate which gear is selected.

TEST PROCEDURE

Voltage

12V at wires **BLUE/YELLOW/BLACK** and also at **RED/LIGHT GREEN/BLACK**.

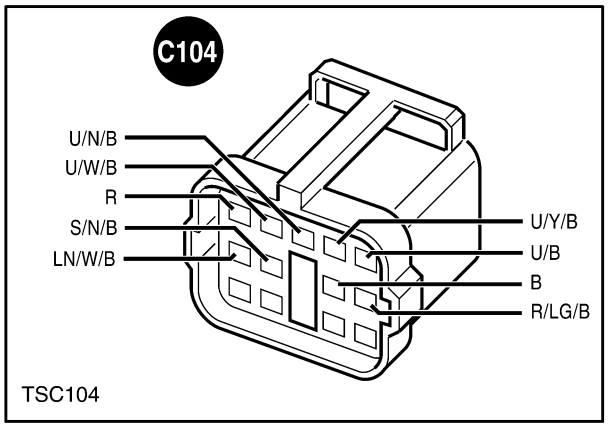

8x2	12x12	24x24	16x16
		3	3

26. CLUTCH PEDAL POTENTIOMETER

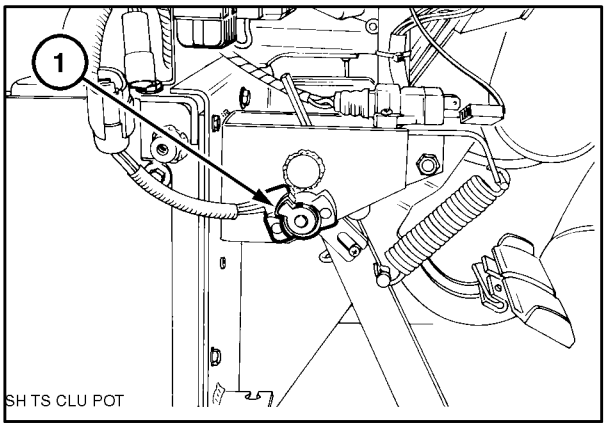

Informs the processor the relative position of the clutch/inching pedal.

Resistance

Typical Resistance between wires	Pedal Up	Pedal Down
Orange to Green	0.3 kΩ	2.5 kΩ
Black to Green	3.6 kΩ	1.5 kΩ
Orange to Black	3.8 kΩ	3.8 kΩ

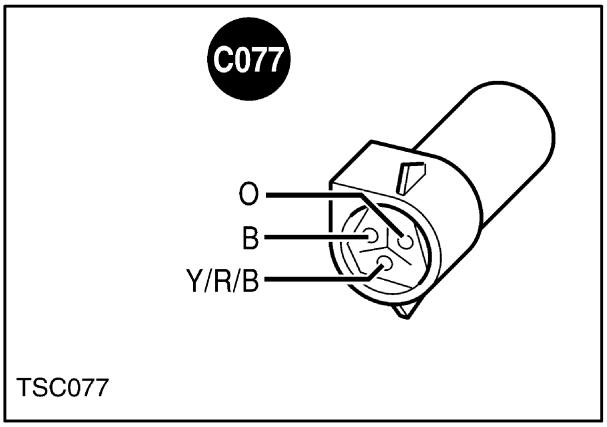

Voltage

5V BROWN wire to **EARTH**.

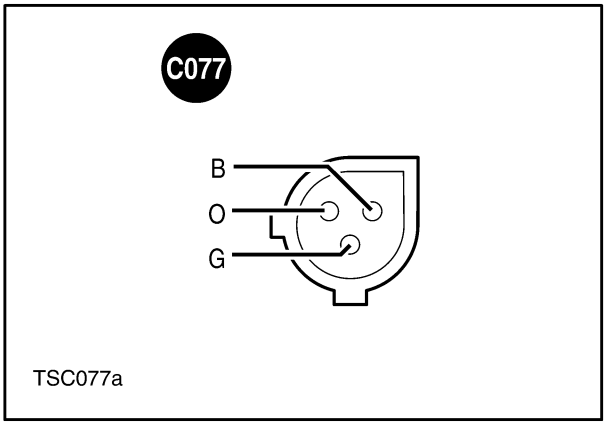

ASSOCIATED ERROR CODES

E12 Clutch pedal potentiometer signal too high

E11 Clutch pedal potentiometer signal too low

8x2	12x12	24x24	16x16
		3	3

27. CLUTCH PEDAL DISCONNECT SWITCH

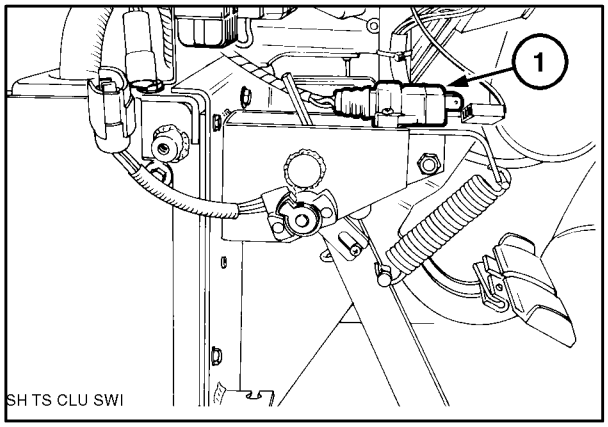

TEST PROCEDURE

Switch

There should be continuity between the two central pins (when the pedal is up).

Pedal down no continuity on central pins.

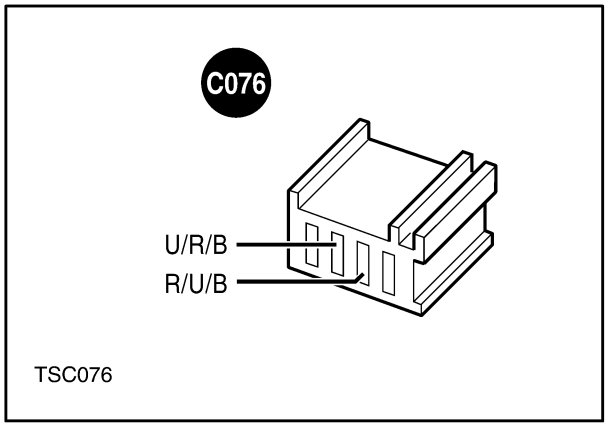

Voltage

12V BLUE/RED/BLACK to **EARTH**.

ASSOCIATED ERROR CODES

E37 Clutch disconnect switch open circuit

E47 Clutch disconnect switch misadjusted high

E48 Clutch disconnect switch short circuit misadjusted, always closed.

8x2	12x12	24x24	16x16
		3	3

28. PWM SOLENOID VALVES

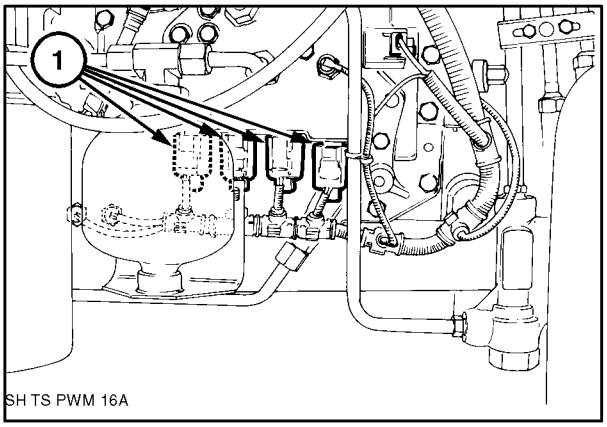

There are two PWM units fitted to a 24x24 transmission and four fitted to a 16x16 transmission.

TEST PROCEDURE

Resistance

The resistance of the solenoid coil, measured at the terminals, should be between **8** and **11** Ω.

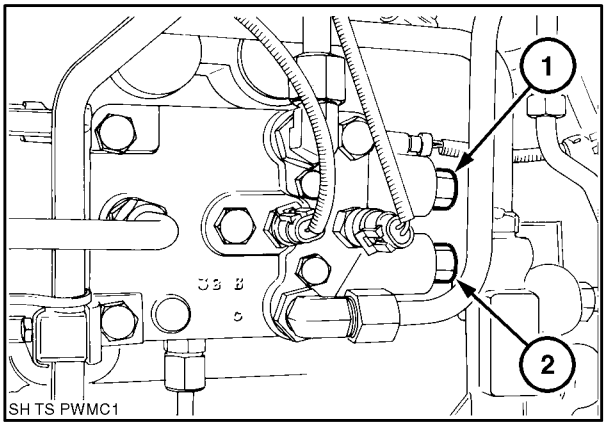

Frequency

The supply signal has a high frequency which is difficult to measure with conventional equipment.

Voltage

Average voltage **8.5V**.

ASSOCIATED ERROR CODES

16x16

E39 C4 clutch solenoid open circuit
E38 C4 clutch solenoid short circuit
E41 C3 clutch solenoid open circuit
E40 C3 clutch solenoid short circuit
E43 C2 clutch solenoid open circuit
E42 C2 clutch solenoid short circuit
E45 C1 clutch solenoid open circuit
E44 C1 clutch solenoid short circuit
E24 All clutches not calibrated

24x24

E39 C2 (High) clutch solenoid open circuit
E38 C2 (High) clutch solenoid short circuit
E41 C1 (Low) clutch solenoid open circuit
E40 C1 (Low) clutch solenoid short circuit
E24 All clutches not calibrated

8x2	12x12	24x24	16x16
		3	3

29. UPSHIFT/DOWNSHIFT BUTTONS

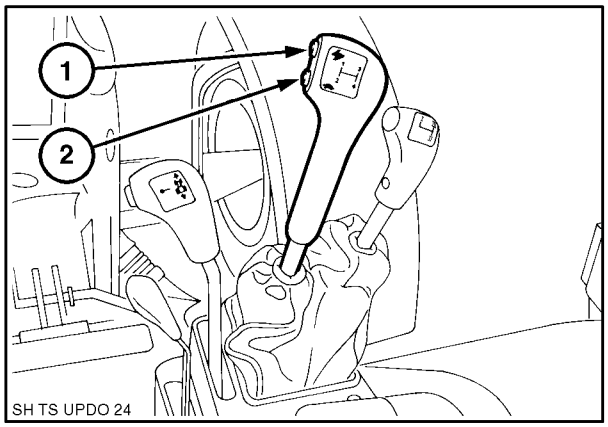

These are sprung loaded - normally open switches

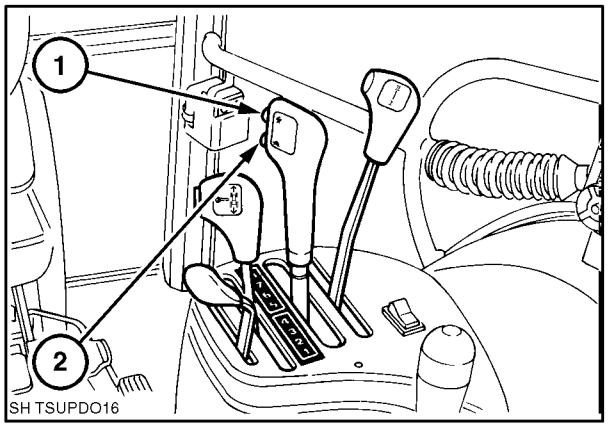

TEST PROCEDURE

Voltage

Both **R/W/B** to **EARTH 12V**.

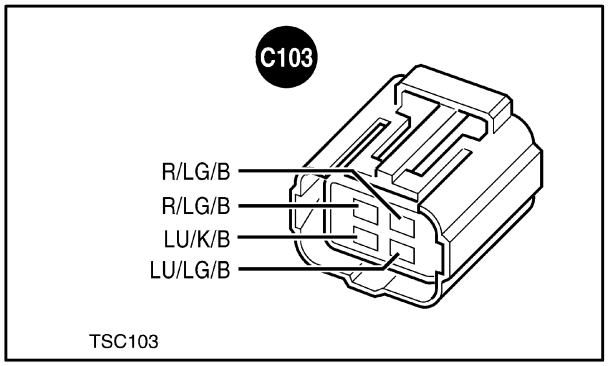

Switch Test

1 Green to 4 Red continuity - when pressing downshift
2 Black to 3 Red continuity - when pressing upshift

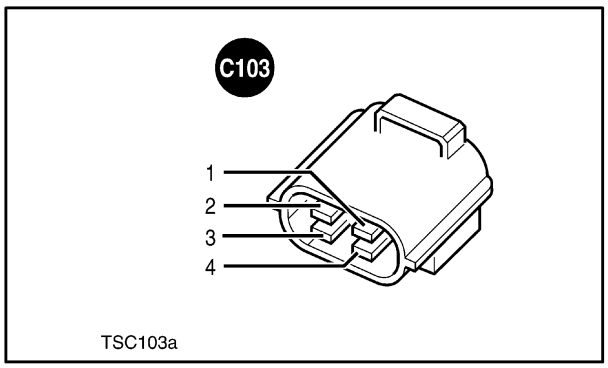

ASSOCIATED ERROR CODES

E13 Up and down switches both on

8x2	12x12	24x24	16x16
	3	3	3

30. DIFFERENTIAL LOCK LIGHT SWITCH

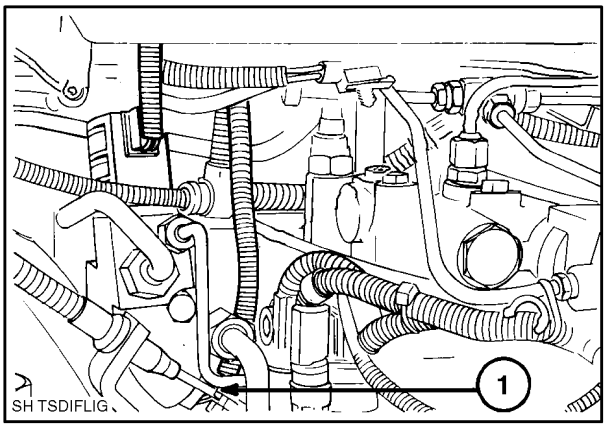

When the rear differential lock is hydraulically engaged, a micro switch is actuated illuminating a warning light.

The front differential lock is actuated from the same hydraulic supply.

TEST PROCEDURE

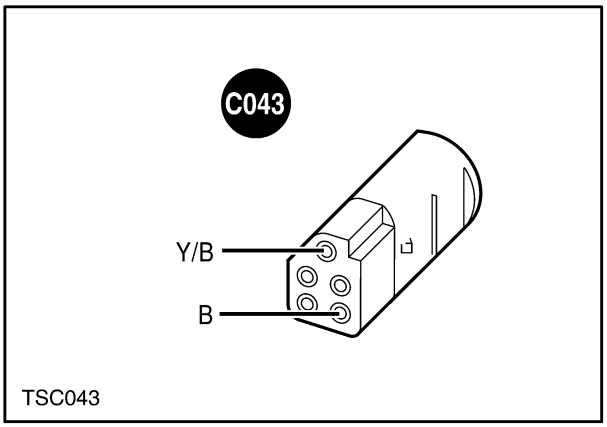

Voltage

12V at **YELLOW** / **BLACK** wire to **EARTH**.

Switch Open Circuit when differential lock disengaged.

WARNING LIGHT

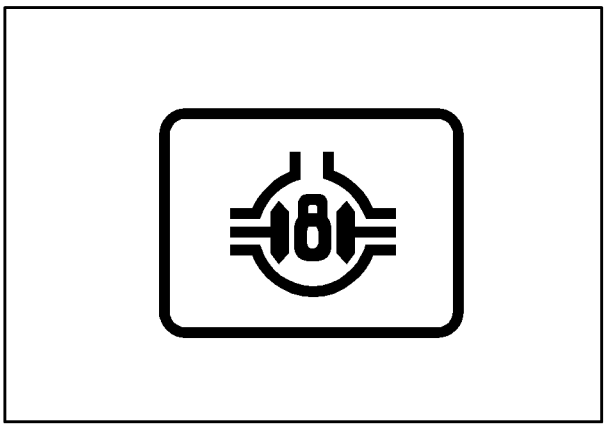

ASSOCIATED ERROR CODES

To be determined.

8x2	12x12	24x24	16x16
3	3	3	3

31. DIFFERENTIAL LOCK, PTO, 4WD, CREEP AND DUMP SOLENOIDS

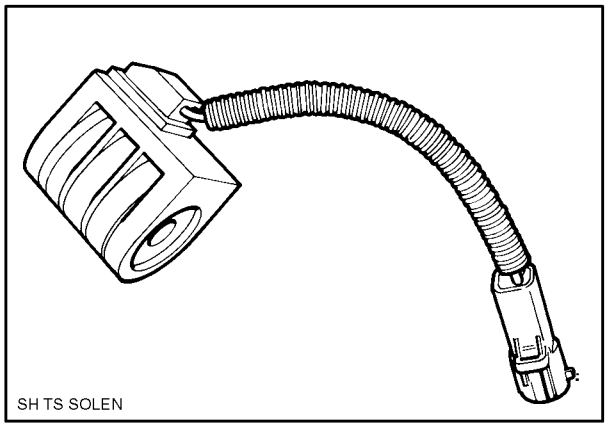

Resistance 7-11 Ω.

TEST PROCEDURE

Differential Lock

When the differential lock is engaged, the voltage at the solenoid terminals should be **12V**, and when it is not engaged, it should be **0V**.

Power Take Off

When the PTO is engaged, the voltage at the solenoid terminals should be **12V** and when it is not engaged, it should be **0V**.

Creep

When creep is engaged, voltage at solenoid terminals should be **12V** and when not engaged **0V**.

Dump

When energised by **12V,** low pressure oil is directed to the PWM valves.

Four Wheel Drive

When the FOUR WHEEL DRIVE is engaged, the voltage at the solenoid terminals should be **0V**, and when it is not engaged, it should be **12V**.

ASSOCIATED ERROR CODES/WARNING LAMPS

16x16

C Wheel speed too high for creeper gear
HC Range shift too high with creeper engaged
E16 Creeper solenoid open/short circuit or attempt was made to engage creeper after prior creeper error

24x24

E36 12x12 dump solenoid open circuit
E35 12x12 dump solenoid closed circuit

8x2	12x12	24x24	16x16
		3	3

32. TRANSMISSION OIL TEMPERATURE SENSOR

Situated in the transmission control valve packs for both 24x24 and 16x16 transmissions.

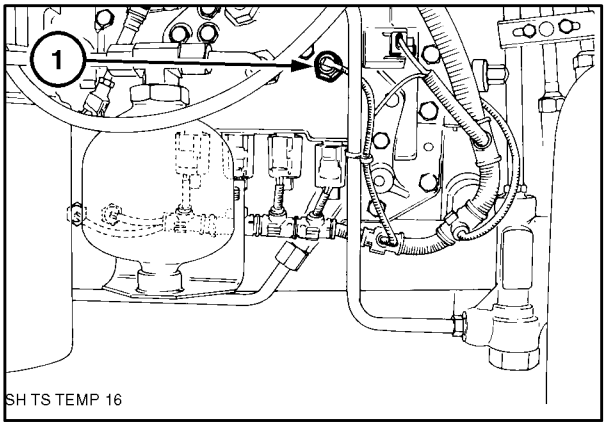

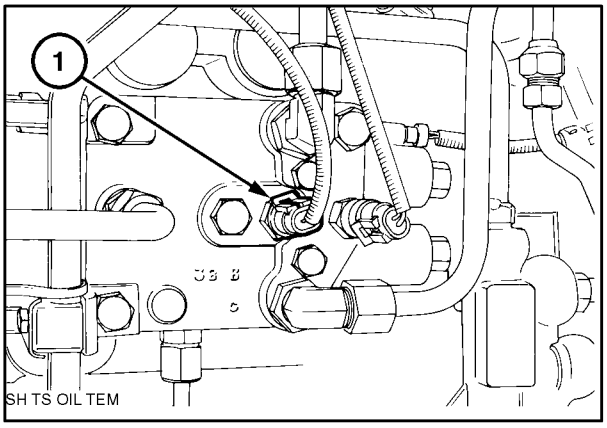

TEST PROCEDURE

Voltage

5V BLACK/GREEN to **EARTH**.

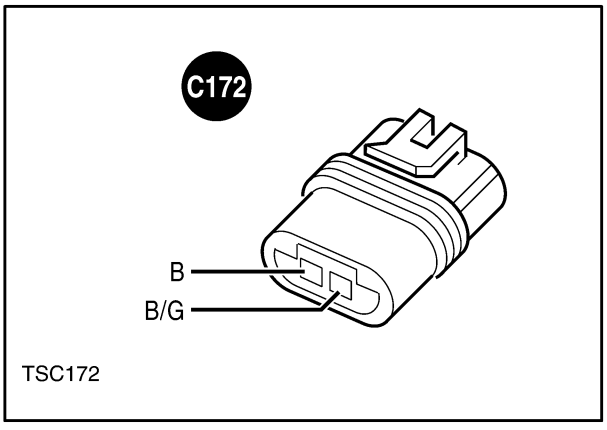

Resistance

Temp ° C	120	100	80	60	40	20	0	–20
Resistance Ω	45	77	105	175	310	592	1240	2900

(Tolerance +/-10%)

ASSOCIATED ERROR CODES

E51 Transmission temperature sensor open circuit
E52 Transmission temperature sensor short circuit

8x2	12x12	24x24	16x16
3	3	3	3

33. TRANSMISSION STATUS SWITCHES

Status switches provide signals to the processor or ignition circuit on which synchronisers are selected.

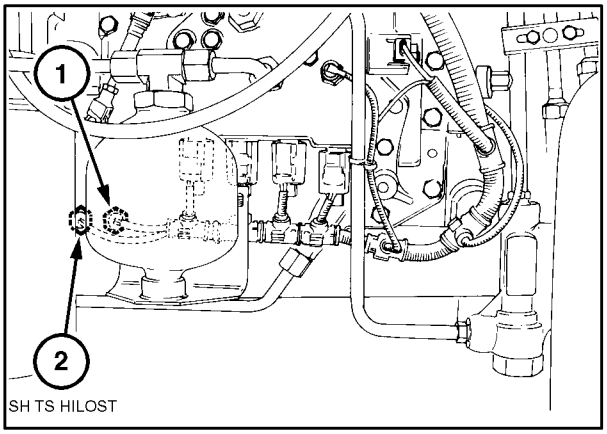

TEST PROCEDURE

Test

When status switches are open circuit no continuity will be observed. When closed circuit continuity is observed. All status switches function on 12 volts.

Transmission	Switch	Lever Position	Switch Status
16x16	Forward/Reverse	Neutral Forward or Reverse	Closed Open
	1-4	Neutral 1-4	Open Closed
	5-8	Neutral 5-8	Open Closed
	Hi-Lo	Neutral Hi or Lo	Open Closed
24x24	Forward/Reverse	Neutral Forward or Reverse	Closed Open
	Hi-Med	Neutral Hi or Med	Open Closed
	1-2	Neutral 1st or 2nd	Open Closed
	3-4	Neutral 3rd or 4th	Open Closed
12x12	Forward/Reverse	Neutral Forward or Reverse	Closed Open
8x2	Hi-Lo	Neutral Hi or Lo	Closed Open

8x2	12x12	24x24	16x16
3	3	3	3

34. MULTIFUNCTION SWITCH LIGHTS/INDICATORS/HORN

Multifunction switch controls lights and indicators.

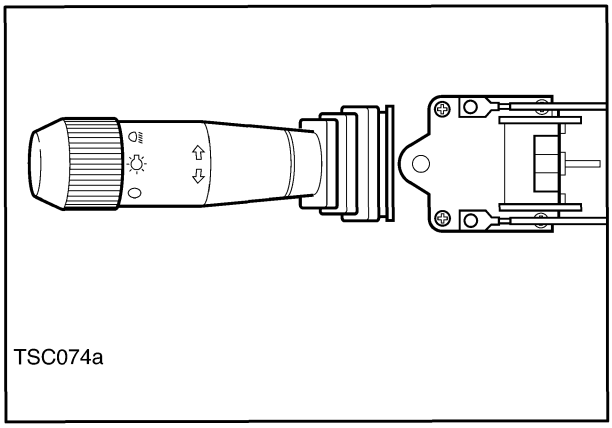
TSC074a

TEST PROCEDURE

Voltage

12V at **BROWN, GREEN, LIGHT GREEN/BROWN** wires to **EARTH**.

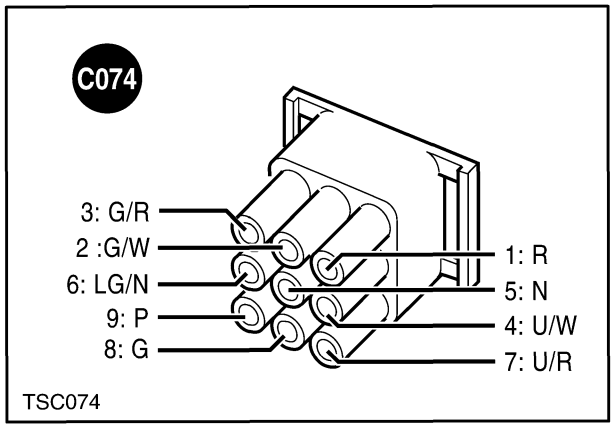

TSC074

Pin No.	Loom Side C074	Switch Side C074	Function
1	R	R	Side light
2	G/W	LU	Right hand Indicator
3	G/R	LU/B	Left hand Indicator
4	U/W	B	Main beam
5	N 12V	S	Supply - side lights, dip, main
6	LG/N 12V	W/B	Supply - indicators
7	U/R	S/B	Dip beam
8	G 12V	P/B	Supply - Horn, Flash
9	P	P	Horn

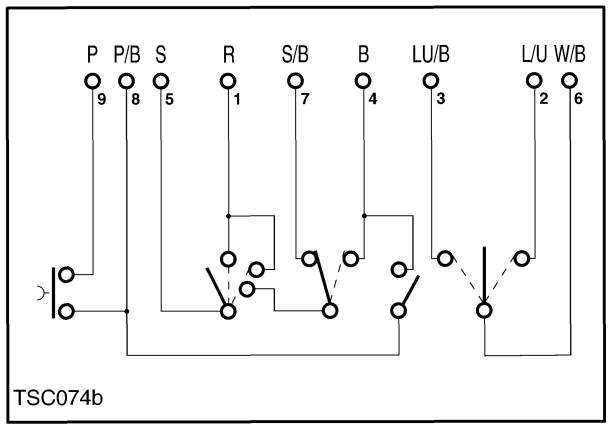

TSC074b

8x2	12x12	24x24	16x16
	3	3	3

35. MULTIFUNCTION WIPER/WASHER SWITCH

Multifunctions switch controls wipers, washer and horn

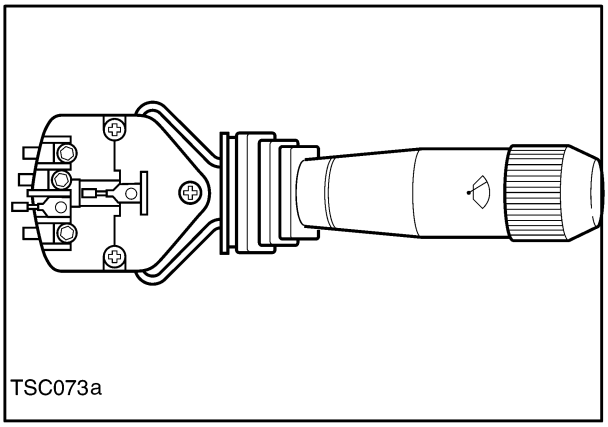

TSC073a

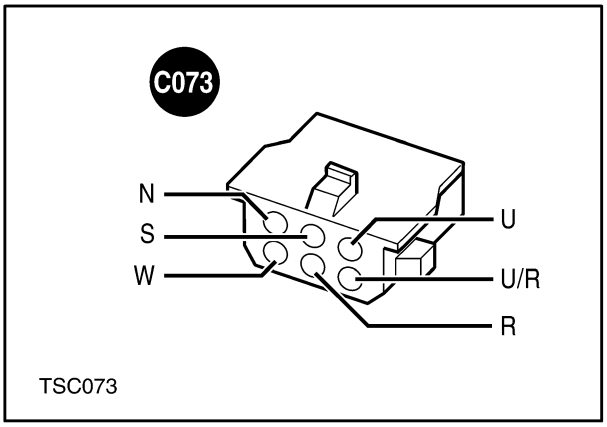

TSC073

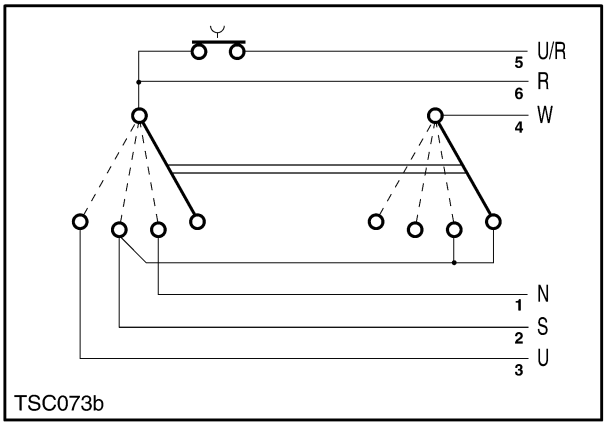

TSC073b

TEST PROCEDURE

Voltage Test

Pin No.	Wire Colour Connector C073 Loom Side	Wire Colour Connector C073 Switch Side	Function	Voltage at C073 Multifunction Switch	
				With C088, Wiper Motor Connected	With C088, Wiper Motor Disconnected
1	LG/O	N	Intermittent Wipe	1.5	1.5
2	R/LG	S	Slow Wipe	12	0
3	W/LG	U	Fast Wipe	12	0
4	G/O/B	W	Park Wipers	0	0
5	LG/U	U/R	Washer	12	12
6	B	R	Earth	0	0

Continuity Test

Pin No.	Function Selected	Continuity to Pin
6	Intermittent Wipe	1
6	Slow Wipe	2
6	Fast Wipe	3
6	Wash	5
5	Wash in Intermittent	1
5	Wash in Slow Wipe	2
5	Wash in Fast Wipe	3
2	Off	4
2	Intermittent	4

DIAGNOSTIC 'H' ROUTINES

INTRODUCTION

The TS range of tractors has a built in diagnostic system.

To gain access to the diagnostic 'H' menu mode routine it is necessary to use the diagnostic test switch, Tool No. 4FT 950, in the tractor diagnostic connector (C125), located behind the right-hand Instrument Control Panel.

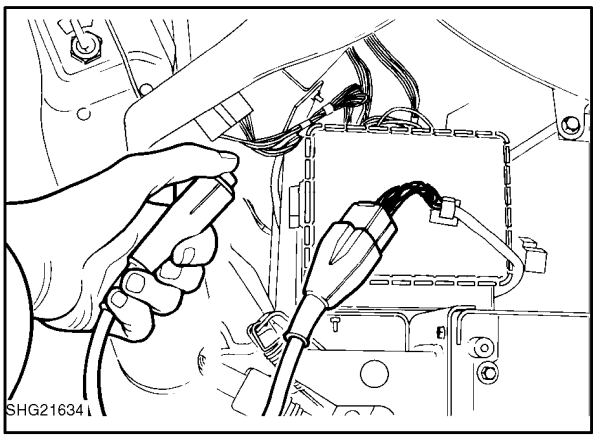

136

The Instrument Cluster, either EIC (A) or AEIC (B), is used to display the information.

Connect Tool No. 4FT 950 to the diagnostic connector and turn the key start switch ON.

The display will show 'HH' to indicate that the 'H' menu has been activated.

1. Transmission display
2. Electronic Draft Control display

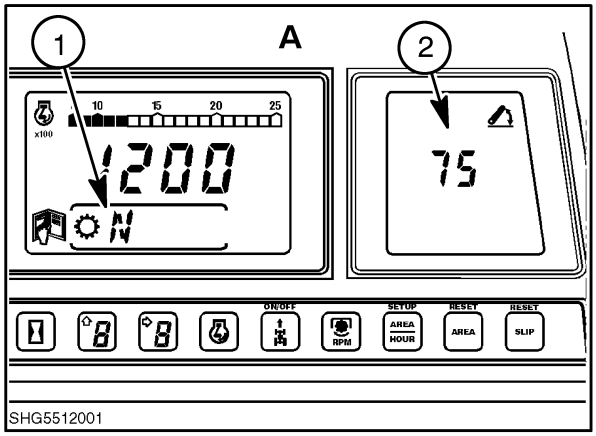

137

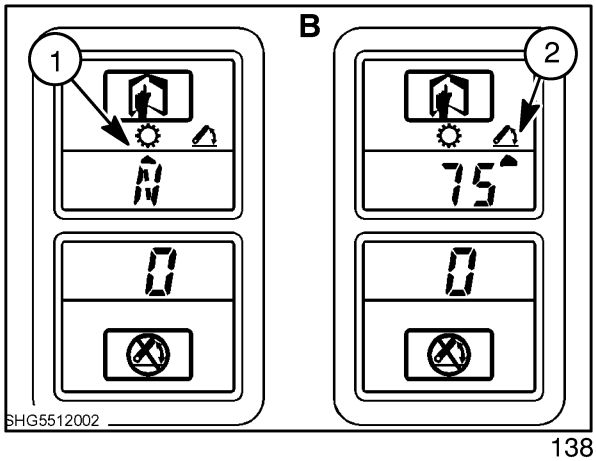

138

16x16 Transmission 'H' Routine

The 'H' routine consists of the following H menu codes:

HH	Service Menu	Page
H1	Transmission clutch spring pressure calibration	3
H2	Transmission clutch spring pressure calibration review	6
H3	(EDC valve calibration values)	6
H4	Software revision level	7
H5	Switch test	7

H6	Select rear tyre rolling radius	8
H7	Auto radius calibration (400 Foot/122m Dash)	10
H8	Non volatile memory reset (Erase Calibrations)	11
H9	Vehicle sensor operation display	12
HA	Clutch pedal position display and oil temperature	14
HB	View stored error codes	14
HC	Clear stored error codes	15
HD	View live error codes	16
HE	Clutch fill time adjustment	16

H1 Transmission Clutch Spring Pressure Calibration

With the test switch connected, start the engine.

Switch off air conditioning.

Apply handbrake.

Select H1.

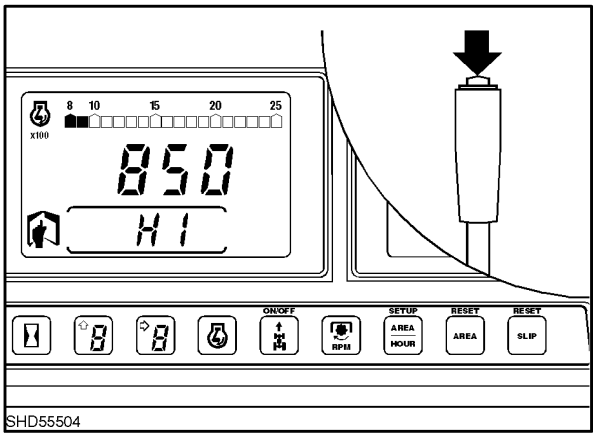

139

The word CAL should appear on the instrument cluster display. This will be replaced after a few seconds by the oil temperature, in degrees Celsius.

Set the engine speed to 1200 +/– 100 rpm.

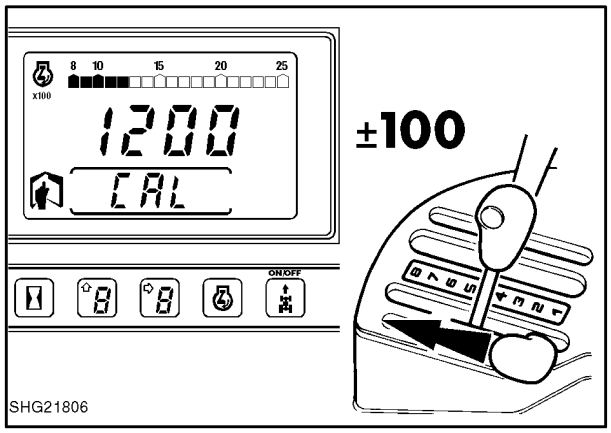

140

C3 and C4 Calibration

Place all gear levers in the forward position.

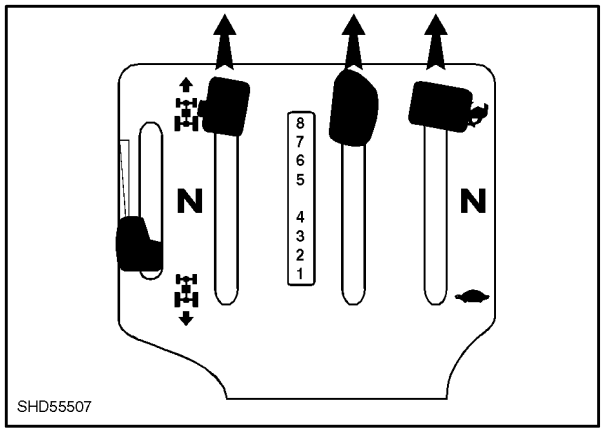

141

C3 calibration :

Press and hold the Upshift button.
If the start up procedure was incorrect, a U code will be displayed (see page 3-183).

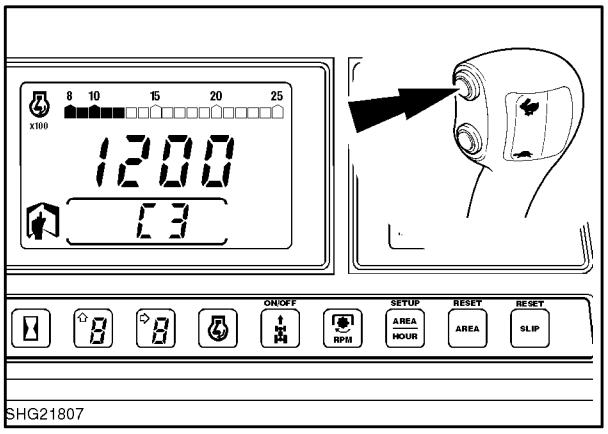

142

The display will change to show a number.
This number will flash and begin to scroll up, as the clutch is calibrated.
When the processor detects a decrease in engine rpm of 50, the calibration stops. This is indicated by a fixed, non flashing number.
Release the Upshift button.

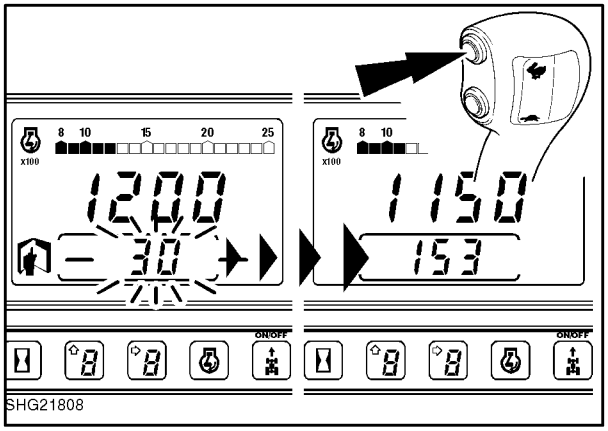

143

C4 calibration :

Use the downshift button to calibrate the C4 clutch in the same manor as the C3 clutch.

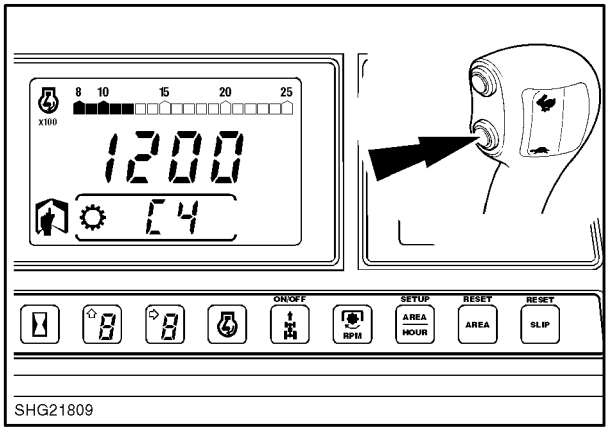

144

The display is similar to the C3 calibration.

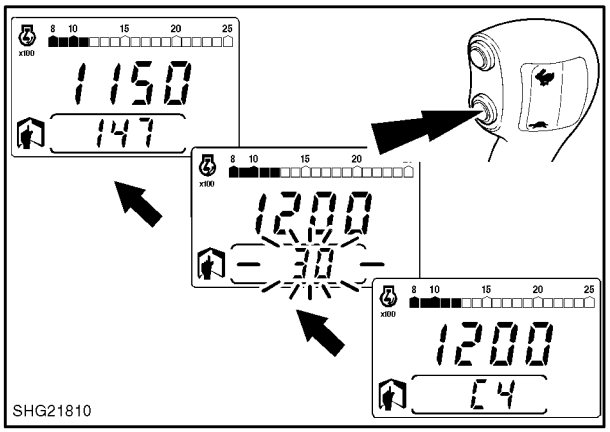

145

C1 and C2 calibration :

Depress the clutch pedal.

Place the range lever in neutral, leaving the shuttle lever and the main lever in the forward position.

Release the clutch pedal.

Set the engine speed to 1200 +/- 100 rpm.

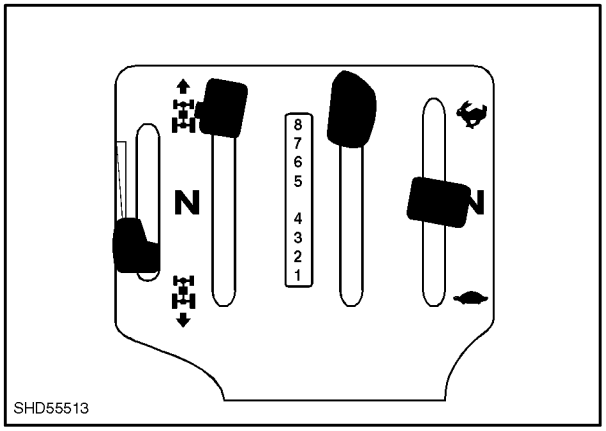

146

Press and hold the Upshift button to calibrate the C1 clutch.
Press and hold the Downshift button to calibrate the C2 clutch.
The procedure is the same as that for the C3 and C4 clutches.

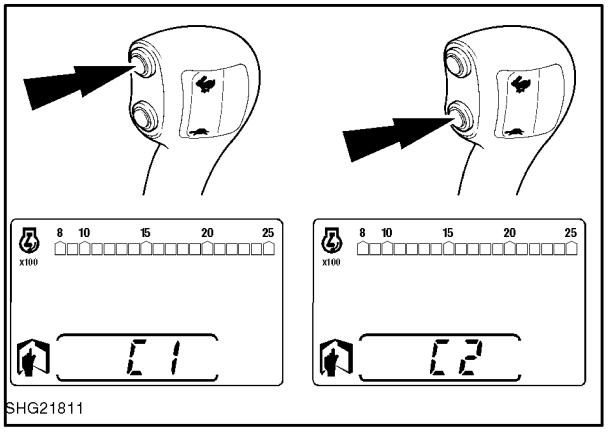

147

Clutch Spring Pressure Calibration Error Codes

U20	Correct start up sequence was not used -
U21	Engine rev/min is too low (1200 rpm ± 100 rpm)
U22	Engine rev/min is too high (1200 rpm ± 100 rpm)
U23	Forward/Reverse shuttle lever is not in forward.
U24	Main lever is not in 5-8 range.
U25	Field/road lever is not in gear.
U26	Clutch pedal is not fully released.

Depress and release the clutch pedal, repeat calibration procedure.

U27	C3 calibration is too low –	The initial test pressure was sufficient to lug the engine.
U28	C3 calibration is too high –	The maximum test pressure was reached without causing the engine speed to decrease 50 rpm.
U29	C4 calibration is too low –	The initial test pressure was sufficient to lug the engine.
U30	C4 calibration is too high –	The maximum test pressure was reached without causing the engine speed to decrease 50 rpm.
U31	Wheel motion detected during calibration –	Handbrake was not applied or the calibration threshold was too low such that initial test pressure was enough to cause slight wheel motion prior to lugging the engine.
U32	C1 calibration is too low –	The initial test pressure was sufficient to lug the engine.
U33	C1 calibration is too high –	The maximum test pressure was reached without causing the engine speed to decrease 50 rpm.
U34	C2 calibration is too low –	The initial test pressure was sufficient to lug the engine.
U35	C2 calibration is too high –	The maximum test pressure was reached without causing the engine speed to decrease 50 rpm.

H2 Transmission Clutch Spring Pressure Calibration Review

Select H2 with the test switch.

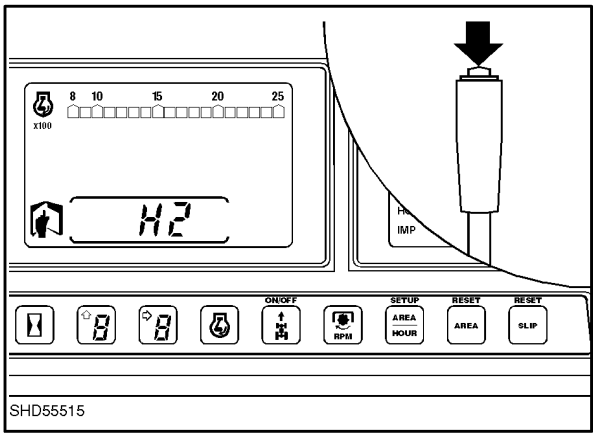

148

The display will automatically show the stored calibration values for C1, C2, C3, C4 and then return to the “HH” screen.

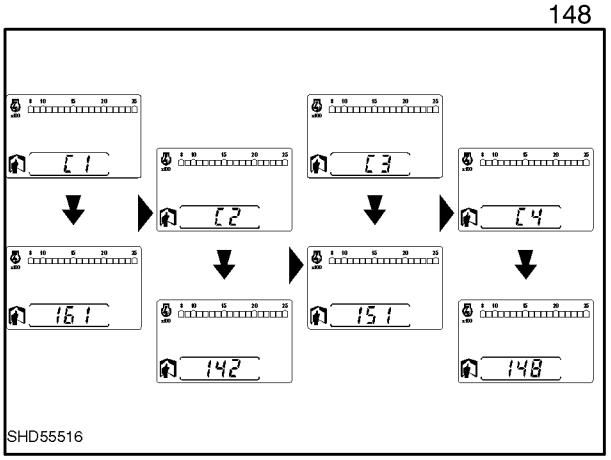

149

H3 See Electronic Draft Control ’H’ Menus

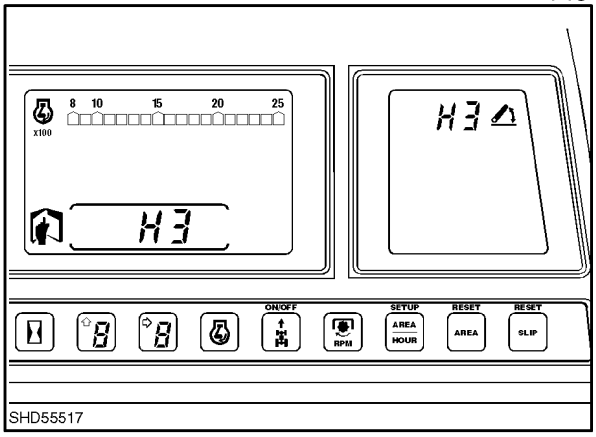

150

H4 Software Revision Level

Select H4 with the test switch.

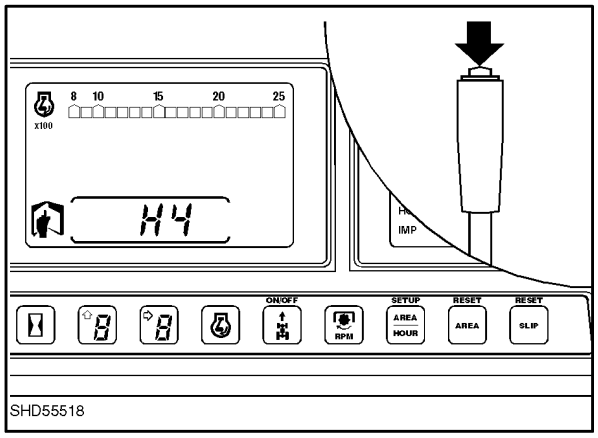

151

The display will automatically show software information:

AF	16x16 transmission
82	Software level
01	Prototype software (if any)

and then return to “HH” screen.

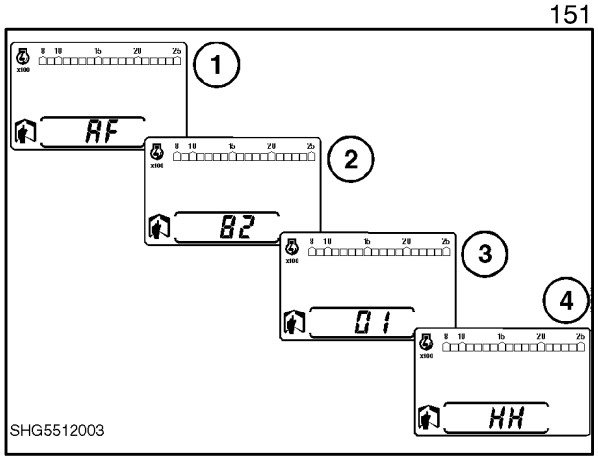

152

H5 Transmission/EDC Switch Test

Select H5 with the test switch.

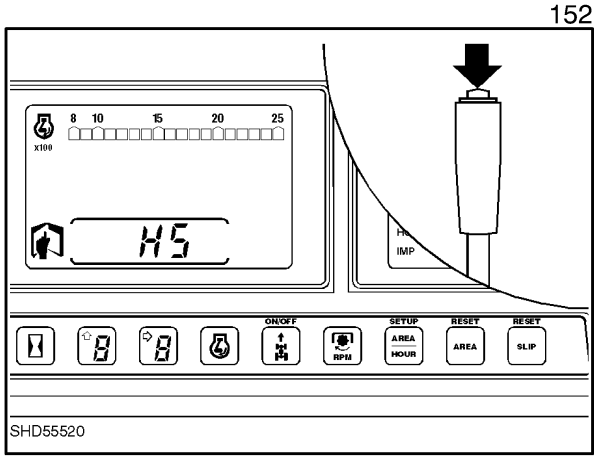

153

The display will then show “d0”.

If a transmission or EDC switch is operated the display will show a code number and an audible tone will be heard to indicate correct operation.

If the code and tone do not operate, the switch or wiring could be at fault.

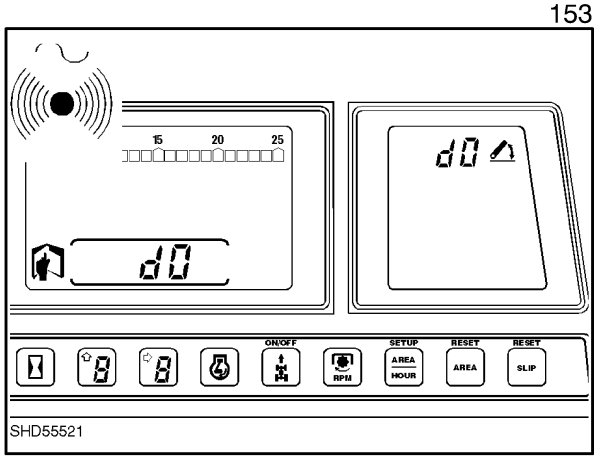

154

16x16 Switch Diagnostics

Code	Switch Operated
d71	Inching Pedal Switch
d74	Downshift Switch
d75	Upshift Switch
d77	5-8 Range Switch
d78	Creeper Switch
d81	1-4 Range Switch
d82	Low Range Switch
d83	High Range Switch
d85	Neutral Switch
d91	Manual differential lock switch position
d92	40°C Oil Temperature Switch
d93	Fuse No. 12 Sense
d94	Shuttle Dump Switch
d95	Right Foot brake switch
d96	Left Foot brake switch
d99	Auto differential lock switch

H6 Select rear tyre rolling radius

Using a diagnostic lead, select H6 in the diagnostic menu.

The current radius will be displayed (in millimetres). On a new vehicle this will be the basic build tyre radius and will not need changing unless different size tyres are fitted.

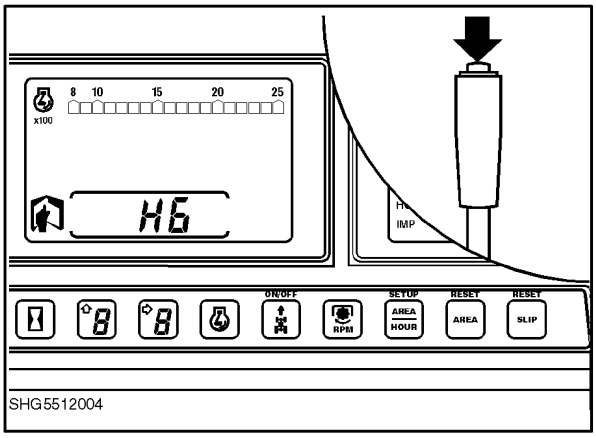

155

By pressing the Transmission Upshift button a larger radius may be selected and Downshift button selects a smaller radius. Use the buttons to select the value closest to the actual radius.

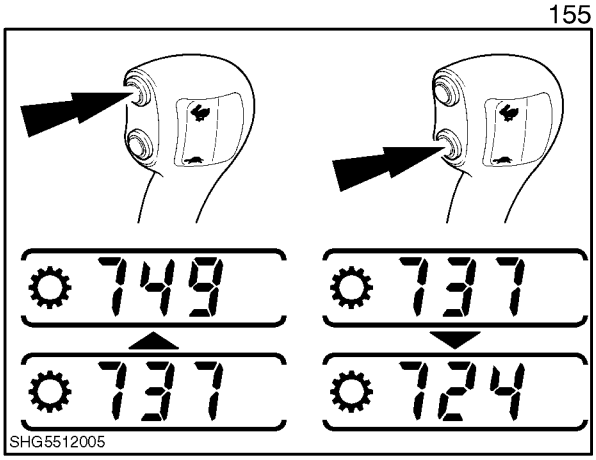

156

TYRE RADIUS INDEX FOR ROAD SPEED CALCULATION

Tyre Size Designation				Radius Index
8.3	–	24		470
	–	32		570
	–	36		620
	–	38		645
	–	44		720
9.5	–	20		445
	–	24		495
	–	28		545
	–	36		645
	–	38		670
	–	44		745
	–	48		795
11.2	–	20		465
	–	24		515
	–	28		565
	–	36		665
	–	38		690
12.4	–	20		490
	–	24		540
	–	28		590
	–	32		640
	–	36		690
	–	38		720
	–	46		820
13.6	–	24		560
	–	26		585
	–	28		610
	–	36		715
	–	38		740
14.9	–	24		590
	–	24	IND	580
	–	26		615
	–	28		640
	–	28	IND	630
	–	30		665
	–	38		765
15.5	–	38		745
16.9	–	24		620
	–	24	IND	610
	–	26		645
	–	28		670
	–	28	IND	660
	–	30		695
	–	34		745
	–	34	IND	730
	–	38		795
	–	42		845
17.5L	–	24	IND	580
18.4	–	24	IND	635
	–	26		670
	–	26	IND	665

Tyre Size Designation				Radius Index
18.4	–	28	IND	685
	–	30		720
	–	30	IND	715
	–	34		770
	–	38		820
	–	42		870
19.5L	–	24	IND	610
20.8	–	34		805
	–	38		855
	–	42		905
21L	–	24	IND	635
	–	30		720
23.1	–	26		760
	–	26	IND	750
	–	30		810
	–	34		860
24.5	–	32		855
28L	–	26		720
30.5L			R32	860
1050 / 50			R32	855
800 / 60			R32	820
440 / 65			R24	560
			R28	610
480 / 65			R24	590
			R28	640
540 / 65			R24	620
			R26	645
			R28	670
			R30	695
			R34	745
			R38	795
600 / 65			R28	695
			R32	745
			R34	770
			R38	820
650 / 65			R38	855
			R42	905
750 / 65			R26	770
800 / 65			R32	870
260 / 70			R16	360
			R18	390
			R20	415
280 / 70			R16	375
			R18	400
300 / 70			R16	375
			R18	405
			R20	445
320 / 70			R20	465
			R24	515
			R28	565
360 / 70			R20	490

Tyre Size Designation				Radius Index
360 / 70			R24	540
			R28	590
380 / 70			R20	510
			R24	560
			R28	610
400 / 70			R20	520
			R24	560
420 / 70			R24	590
			R28	640
			R30	665
460 / 70			R24	590
480 / 70			R24	620
			R26	645
			R28	670
			R30	695
			R34	745
			R38	795
500 / 70			R34	745
520 / 70			R26	650
			R30	720
			R34	770
			R38	820
540 / 70			R34	770
580 / 70			R26	670
			R38	855
			R42	905
600 / 70			R30	745
620 / 70			R26	720
			R38	855
			R42	905
650 / 70			R26	745
			R30	795
680 / 70			R32	820
			R34	855
710 / 70			R38	905
340 / 75			R20	480
380 / 75			R20	500
620 / 75			R26	760
			R30	810
			R34	860
650 / 75			R32	835
			R34	855
680 / 75			R32	870
710 / 75			R34	905
210 / 80			R16	345
250 / 80			R16	385
			R18	410
260 / 80			R20	445
320 / 80		R18	IND	475

Find the rolling radius of the rear tyres of the vehicle using the table provided on the previous page or if the tractor is fully built and tyres at the correct pressure the radius can be measured (in millimetres) from centre of rear axle to ground.

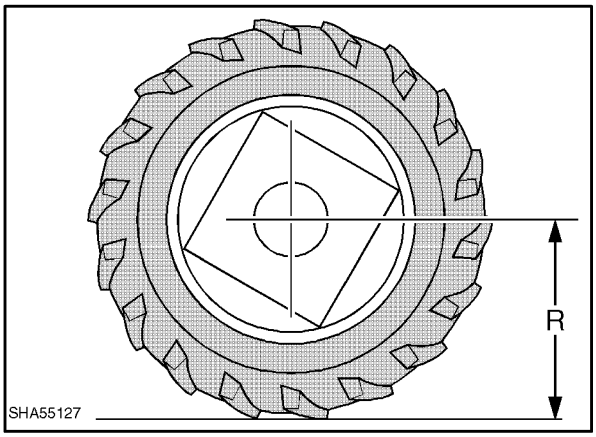

157

The Upshift and Downshift buttons pressed together will toggle the groundspeed display between Kph and Mph units. The default setting is Mph.

Once you have the radius and display units selected, key off and disconnect the diagnostic lead. This will store the details in Non-Volatile Memory (i.e. values will not be lost if battery is disconnected).

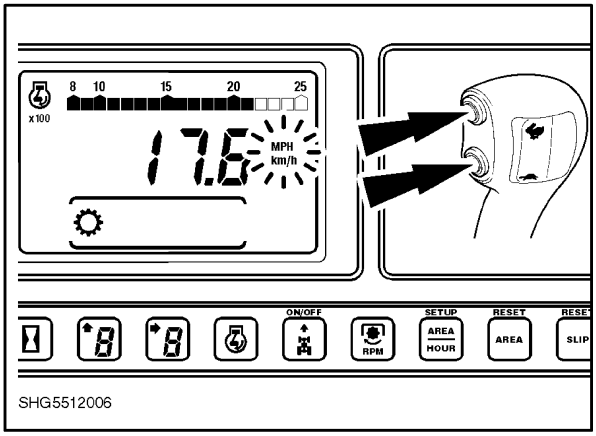

158

H7 Auto Radius Calibration
(400 foot / 122m dash)

Mark out a 400 foot / 122 metre distance on level ground.

Install the Test Switch and start the engine.

Select H7 with the test switch.

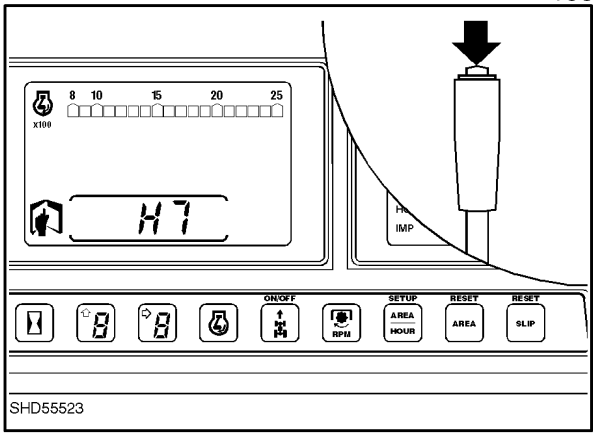

159

The display will change to show the current radius (in millimetres). On a new vehicle this will be the basic build tyre radius and will not need changing unless different size tyres are fitted.

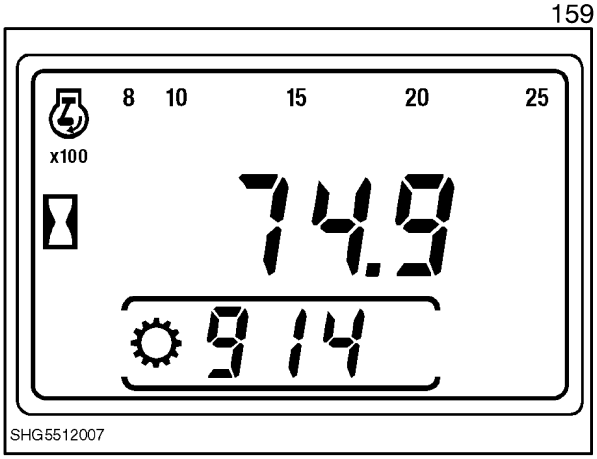

160

With the transmission in high range (hare) and gear lever in 1–4 group.

Drive the tractor towards Start Line, as the front wheels cross the line press the Upshift button. The display will now show “Run”. Continue to the End line and as the front wheels cross, press the Downshift button.

The radius of the rear wheels will now be displayed.

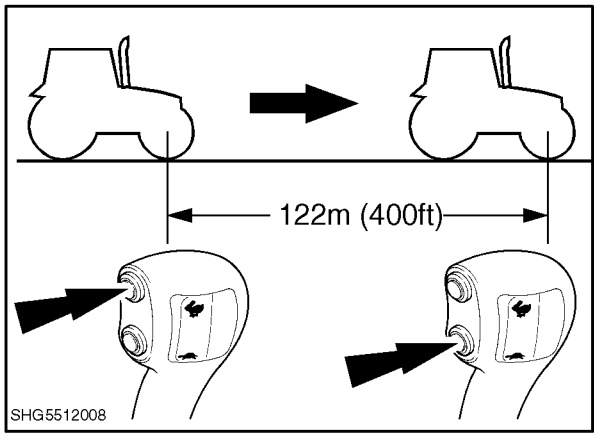

161

Further presses of the Downshift button will toggle the groundspeed display between Kph and Mph units. The default setting is Mph.

Once you have the radius and display units selected, key off to store the settings.

H8 Non Volatile Memory Reset

Select H8 with the test switch.

WARNING!
H8 WILL CLEAR ALL CALIBRATION VALUES AND STORED ERROR CODES

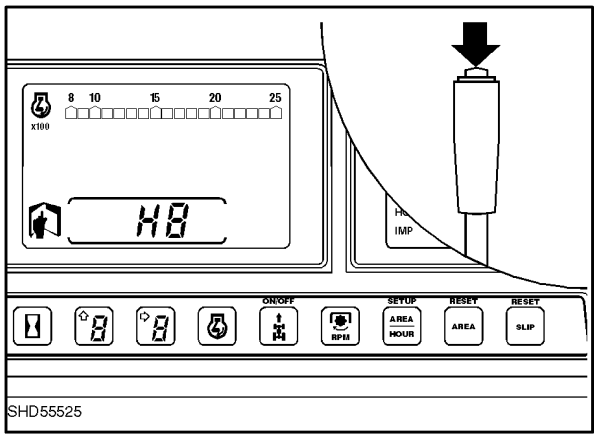

162

After selecting H8 the display will change to “EE” (Erase EPROM) automatically.

The display will then return to the “HH” screen.

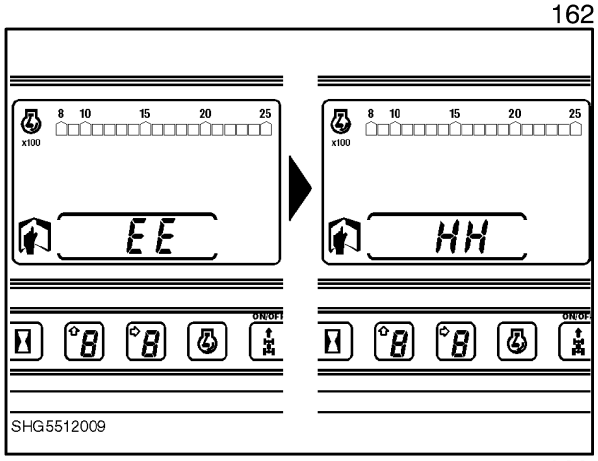

163

H9 Vehicle Sensor Operation Display

Select H9 with the test switch.

H9 allows various signals to and from solenoids, potentiometers etc. to be checked for both transmission and EDC systems.

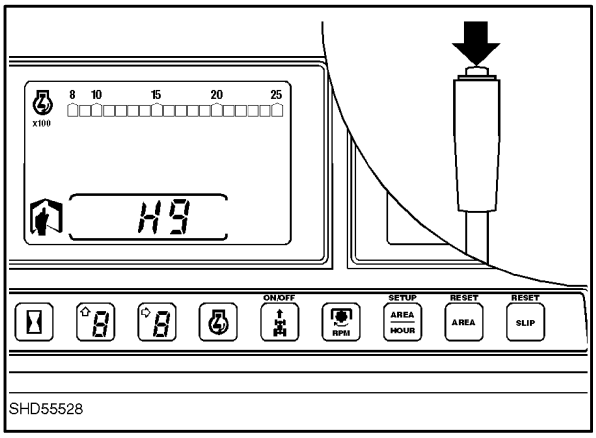

164

The required channel can be selected by using the up/downshift switches.

NOTE: 4 seconds after selecting a channel, the channel number will be replaced by a value for that channel.

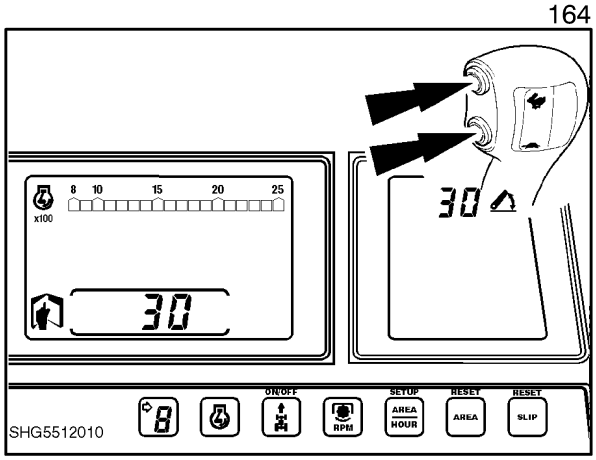

165

Channel Number	Description	Typical Approximate Values
0	Clutch Pedal position	91 Released, 26 Depressed
1	Transmission Oil Temperature	75 at 40°C
2	Transmission 40°C	96 > 40°C, 2 < 40°C
3	Fuse 12 Sense	96
4	Not applicable to service	49
5	5 Volt Reference (Transmission Control)	49
6	12 Volt Vf Input (Fuse 13)	42
7	12 Volt Vd Input (Clutch Switch)	43
8	12 Volt Vh Input (Fuse 14)	43
9	8 Volt Reference (EDC Control)	79
10	Not used	–
11	Not applicable to service	–
12	Not applicable to service	–
13	Not applicable to service	–
14	C1 Valve Current Sense	92 Engaged, 0 Not Engaged
15	C2 Valve Current Sense	92 Engaged, 0 Not Engaged
16	C3 Valve Current Sense	92 Engaged, 0 Not Engaged
17	C4 Valve Current Sense	92 Engaged, 0 Not Engaged
18	EDC Valve Raise Solenoid Current	0–73

Channel Number	Description	Typical Approximate Values
19	EDC Valve Lower Solenoid Current	0–73
20	Ground Speed Signal	64
21	Not used	–
22	Not used	–
23	Not used	–
24	Not used	–
25	Implement Status Lamp Sense	7 when illuminated
26	Wheel Slip Lamp Sense	7 when illuminated
27	Not used	–
28	Lift Arm Position Sensing Potentiometer	33 Lift Lowered 83 Lift Raised
29	Lift Control Lever Potentiometer	27 Fully Lowered 83 Fully Raised
30	Drop Rate Control Potentiometer	84 Turned Fully Clockwise 14 Turned Fully Counter Clockwise
31	Height Limit Control Potentiometer	84 Turned Fully Clockwise 14 Turned Fully Counter Clockwise
32	Position/Draft Sensitivity Potentiometer	84 Turned Fully Clockwise 14 Turned Fully Counter Clockwise
33	Slip Limit Control Potentiometer	84 Turned Fully Clockwise 14 Turned Fully Counter Clockwise
34	Right Hand Load Sensing Pin	48 When Implement not being used
35	Left Hand Load Sensing Pin	48 When Implement not being used

NOTE: To observe the values for channels 14, 15, 16 and 17 the engine needs to be running and the appropriate gear selected.

The values quoted are approximate typical values and these may vay slightly from tractor to tractor. Allow up to 10% on the figures quoted.

Explanations:

Vf Input: This is the input voltage into the microprocessor to transmission components not directly affected by the clutch pedal switch, i.e. PWM solenoids C1 and C2 and the Creeper solenoid.

Vd Input: This is the input voltage into the microprocessor to transmission components which are affected by the clutch pedal switch, i.e. PWM solenoids C3 and C4.

Vh Input: This is the input voltage into the microprocessor for EDC components, i.e. Raise and Lower solenoids.

HA Clutch Pedal Position Display and Oil Temperature

Select HA with the test switch.

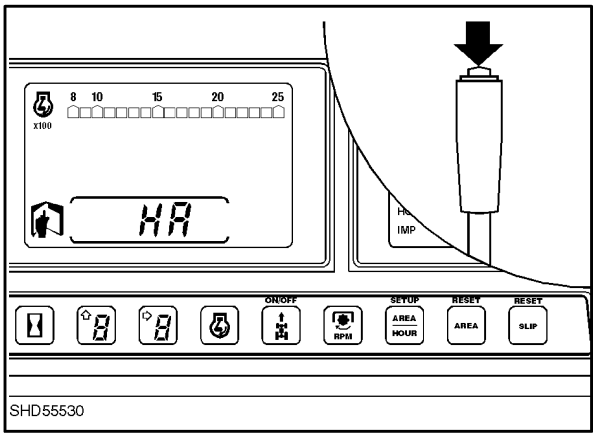

166

The position of the clutch pedal can then be monitored.

Use this mode to correctly set up the clutch pedal switch. The switch should operate between 8 (down click) and 14 (upwards click).

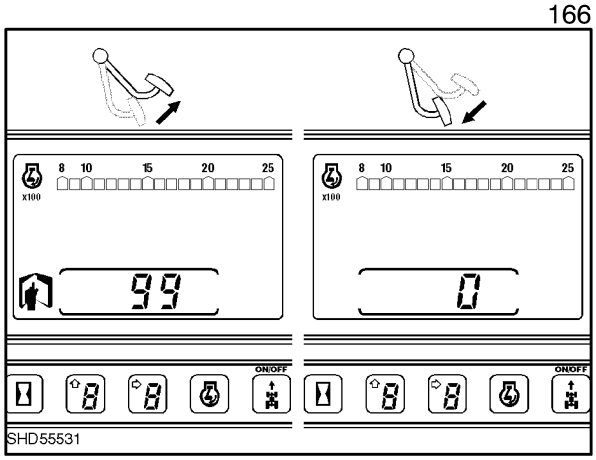

167

HB View Stored Error Codes

Select HB with the test switch.

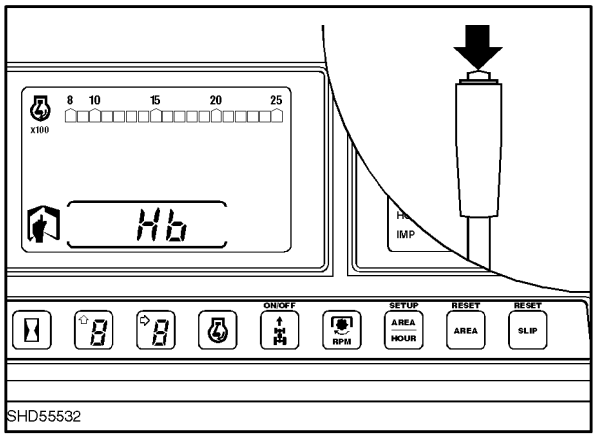

168

The most recent error code will be displayed.

Up to 30 error codes can be stored. This display mode sorts the error codes so that the errors which occurred most recently are displayed first.

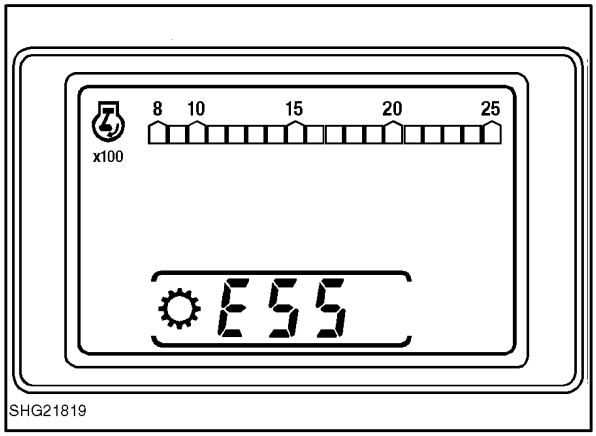

169

To view the hours of the last occurence depress and hold the upshift button.

Continue to hold the upshift button and after 2 seconds of displaying the hours, the screen will go blank then the number of occurences will be displayed.

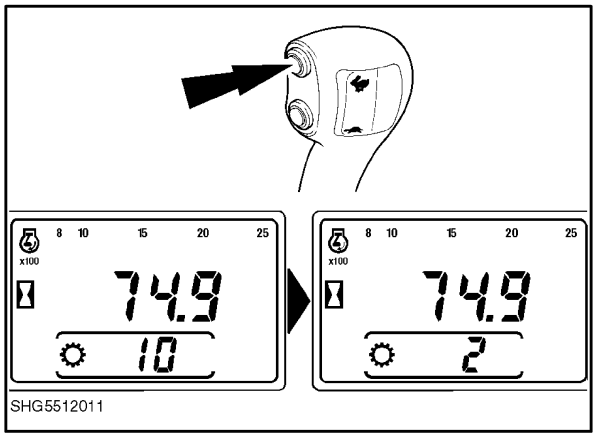

170

To select the next stored error code press the downshift.

NOTE: *Ongoing error conditions will be counted each time the key switch is turned on. For example, E51 (temperature sensor open circuit) could show a large number of occurrences simply because the circuit has been open for months, and the error was detected each time the tractor was started.*

To return to the 'top' of the list depress both up and downshift buttons together.

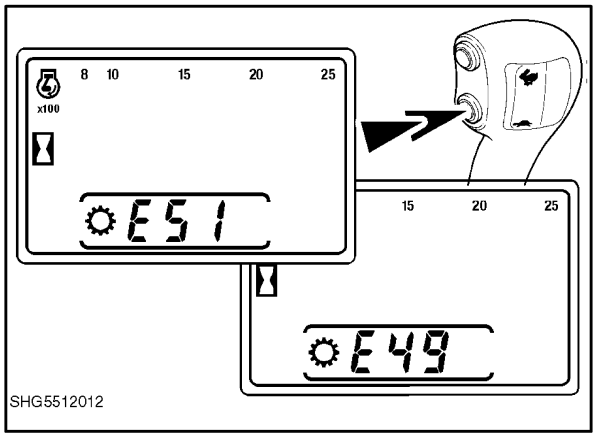

171

When there are no more error codes to select the display will show three dashes.

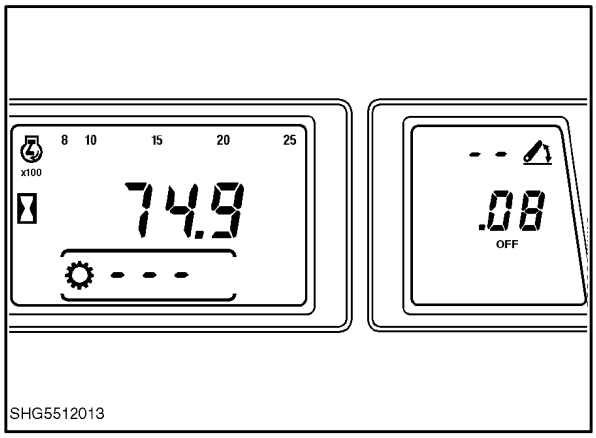

172

HC Clear Stored Error Codes

This mode functions like 'H8' but only clears stored error codes. Calibration values are not affected.

Select HC with the test switch.

The dispaly will go blank, show 'EE' go blank again and then return to 'HH'.

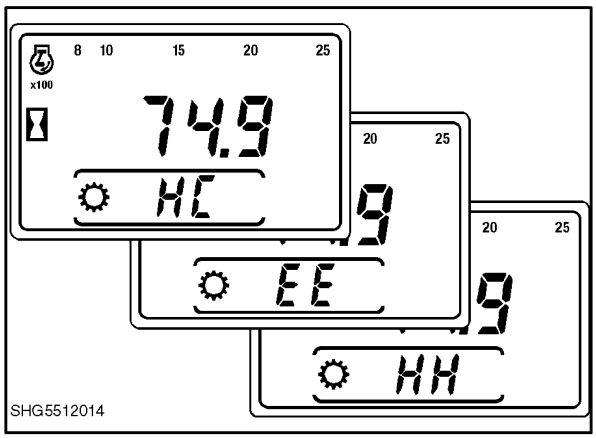

173

HD View Live Error Codes

Select HD with the test switch.

After a few seconds the display will revert to normal operating mode.

This mode allows normal tractor operation, but any detected errors will cause an error code to be displayed, whether they are disabling or not.

Key off, then on, to reset system to normal operation, i.e. only disabling error codes displaying.

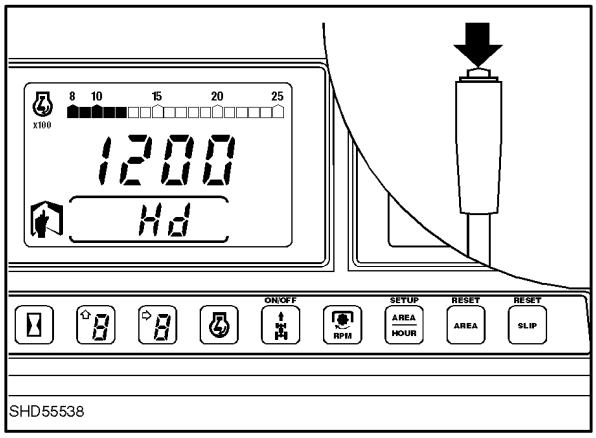

174

HE Clutch Fill Time Adjustment

Set up procedure:

- Warm the oil to normal operating temperature, at least 60°C.
- Park the tractor on a level surface. Allow some space as the tractor will move when testing clutches 3 and 4.
- with a diagnostic tool installed start the engine and set engine speed to 1200 +/- 100 rpm.

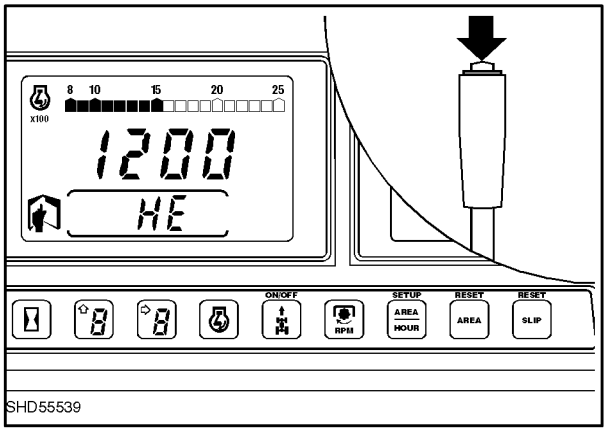

175

Entering the calibration mode :

Place the 4-5 (main) and range levers in neutral, place the shuttle lever in forward and release the clutch pedal.

Using diagnostic tool 4FT950 select mode **HE.**

If the oil temperature is less than 60°C '**F1**' will be displayed, alternating with the display of oil temperature. This will NOT stop until the oil reaches 60°C.

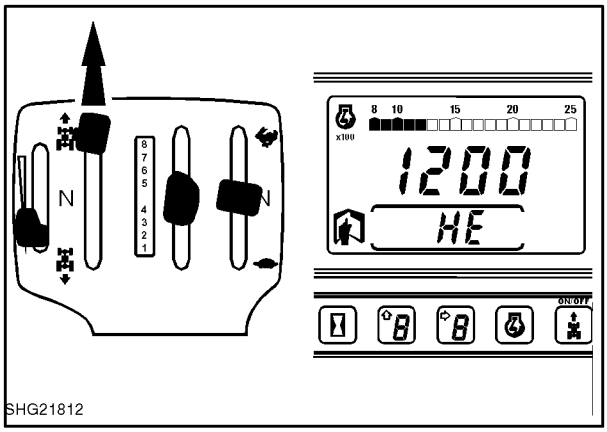

176

CLUTCH SELECTION:
While the 4–5 lever is in neutral, the display will indicate which clutch is selected.

To select C1 or C2 the range lever must be in neutral.
To select C3 or C4 the range lever must be in the high range

To switch between C1 and C2 or C3 and C4, press the upshift or downshift switch while the 4–5 lever is in neutral.

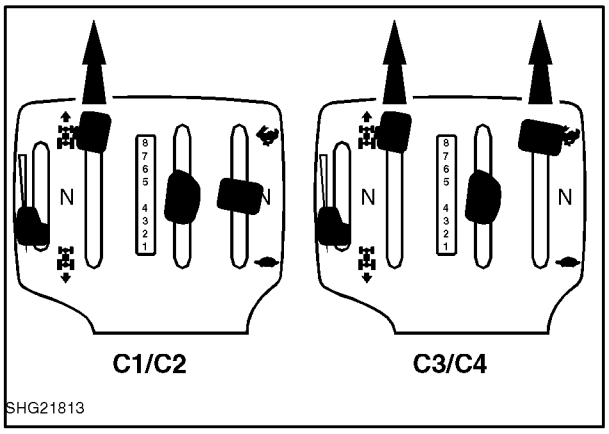

177

ADJUST AND TEST C1 OR C2

Shift the 4-5 lever into 5 (forward).

This display will show C1 or C2 and to the left of this a sequence of horizontal lines will appear to indicate a ramping up of pressure on the C3 and C4 clutches to prevent output rotation of the C1 and C2 clutches.

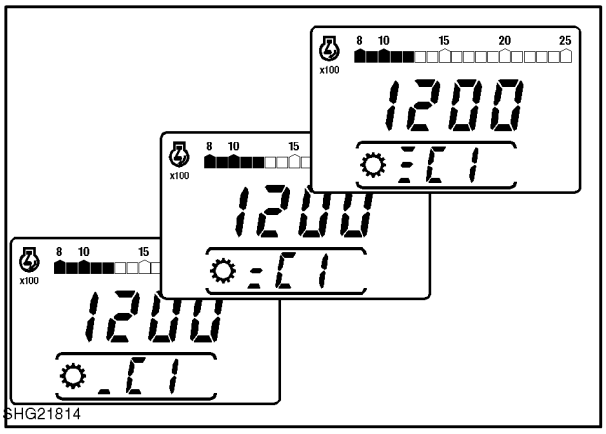

178

The display will then change to a single digit number which is indicating the quickfill time in 10 millisecond units.

This can be adjusted using the upshift and downshift switches.

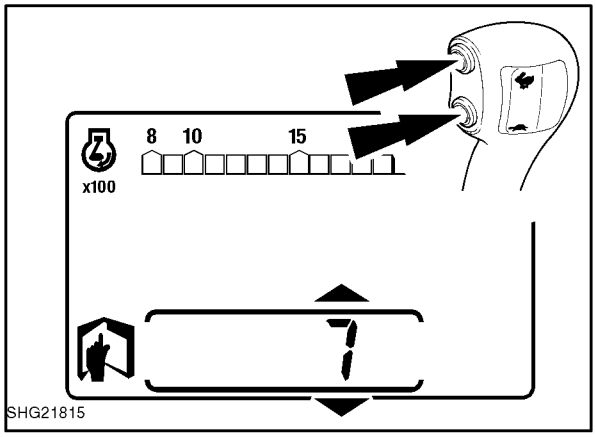

179

To test the quickfill setting, press and release the dump switch. The display will show 'Fill' and then return to the quickfill setting.

Listen to the clutch engagement 'Slap'.

Increase the value to a point where a 'slap' is just audible and then reduce the value by 2.

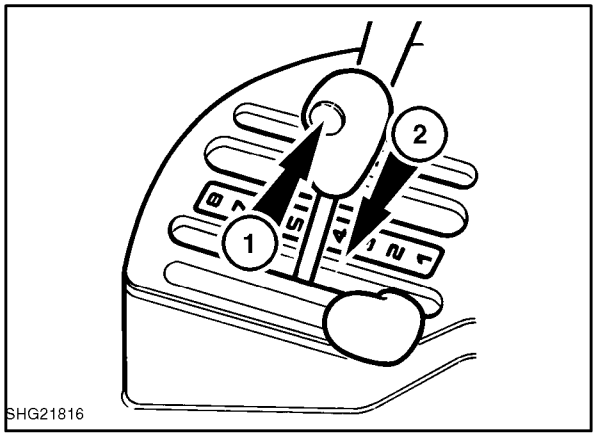

180

ADJUST AND TEST C3 OR C4

Ensure that the handbrake is OFF.

Shift the range lever into the high range.

Shift the 4-5 lever into 5 (forward) and release the clutch pedal.

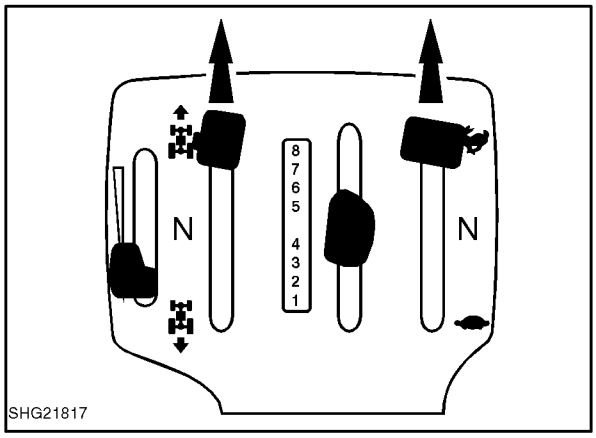

181

This display will show C3 or C4 and to the left of this a sequence of horizontal lines will appear to indicate a ramping up of pressure on C1 clutch to connect C3 and C4 to the engine.

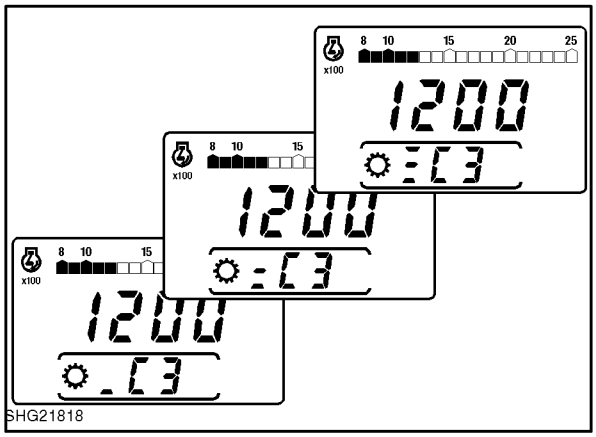

182

The display will then change to a single digit number which is indicating the quickfill time in 10 millisecond units.This can be adjusted using the upshift and downshift switches.

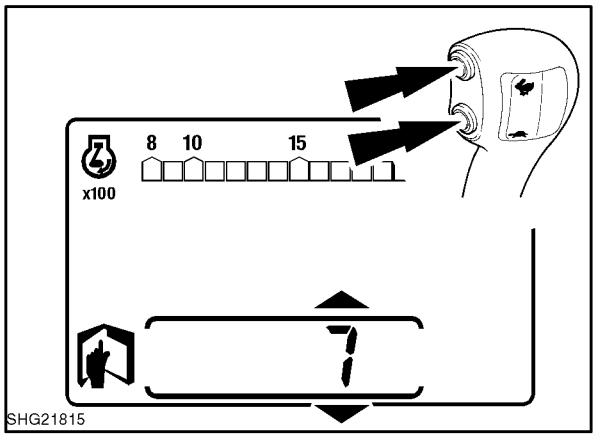

183

To test the quickfill setting, press and release the dump switch. The display will show 'Fill' and then briefly to the clutch selected then the quickfill setting.

As the dump switch is released the tractor should be felt to 'rock' as the clutch fills.

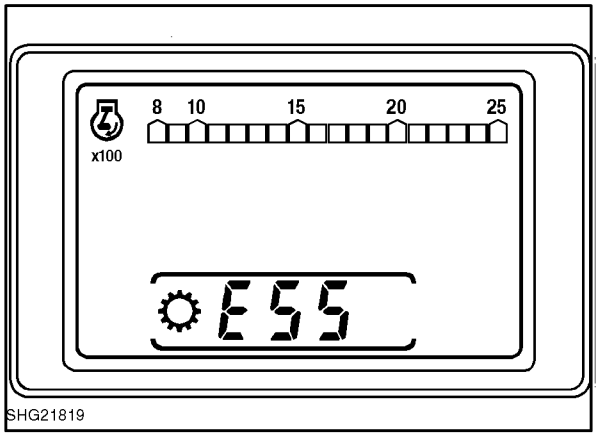

184

Adjust the fill time until the rock is barely noticeable, then reduce the value by 2.

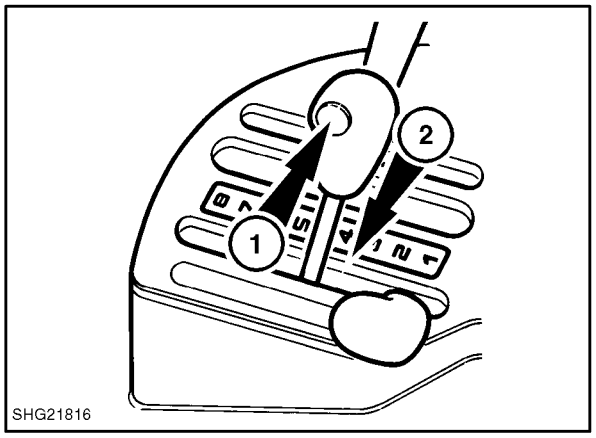

185

24x24 Dual Command Transmission 'H' Routine

The 'H' routine consists of the following H menu codes:

HH	Service Menu	Page
H1	Not used for 24x24 transmission	20
H2	Transmission clutch spring pressure calibration review	20
H3	(EDC valve calibration values)	21
H4	Software revision level	21
H5	Switch test	22
H6	Select rear tyre rolling radius	23
H7	Auto radius calibration (400 Foot / 122m Dash)	25
H8	Non volatile memory reset (Erase Calibrations)	26
H9	Vehicle sensor operation display	27
HA	Clutch pedal position view and oil temperature	29
HB	View stored error codes	29
HC	Clear stored error codes	30
HD	View live error codes	31
HE	Clutch fill time adjustment	31
HF	Transmission clutch spring pressure calibration	33

H1 Not used

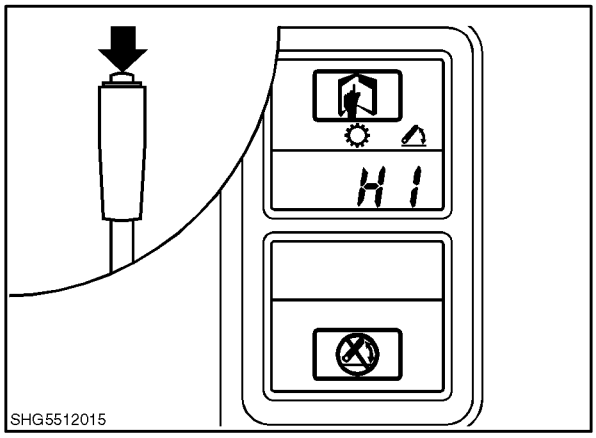

186

H2 Transmission Clutch Calibration Value Review

Select H2 with the test switch.

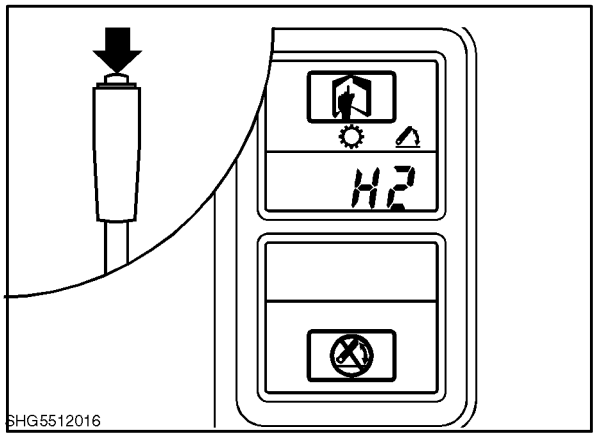

187

The display will change to show first the Lo clutch stored calibration value and then the Hi clutch value.

NOTE: *The appropriate light, hare or tortoise will also illuminate.*

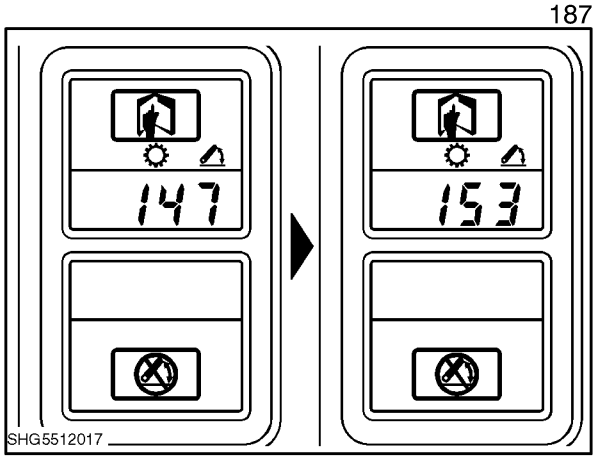

188

The display automatically returns to HH.

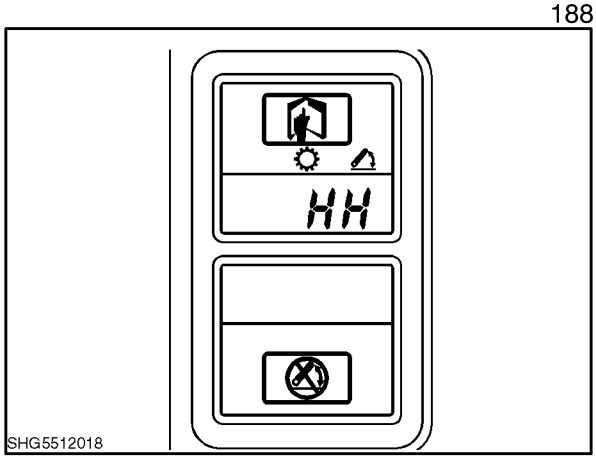

189

H3 See “Electronic Draft Control” ’H’ Menus

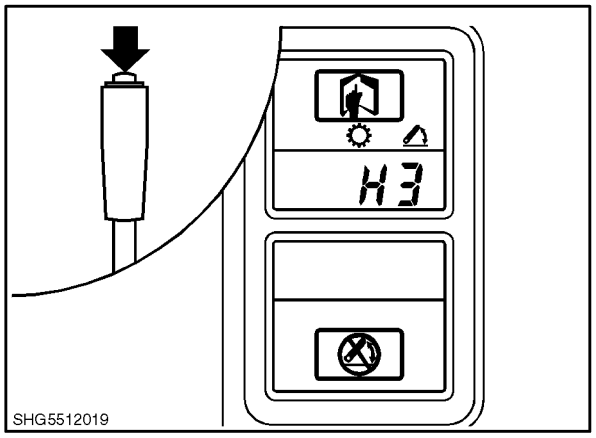

190

H4 Software Revision Level

Select H4 with the test switch.

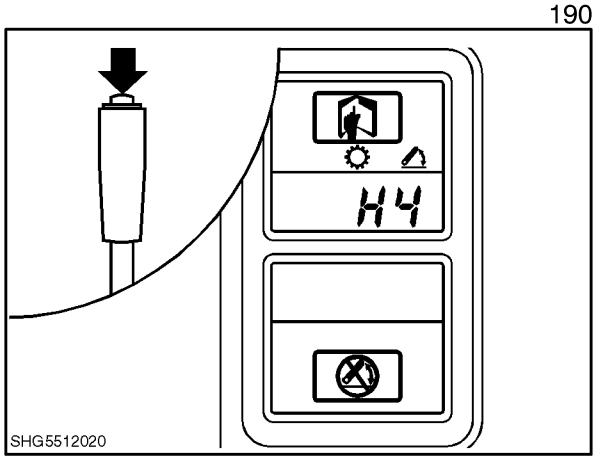

191

The display will automatically display:

AE 24x24 dual command transmission
82 Software level
01 Prototype software (if any)

and then return to “HH” screen.

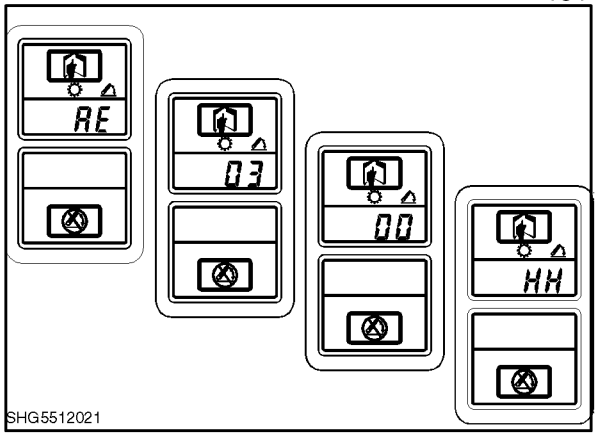

192

H5 Transmission/EDC Switch Test

Select H5 with the test switch.

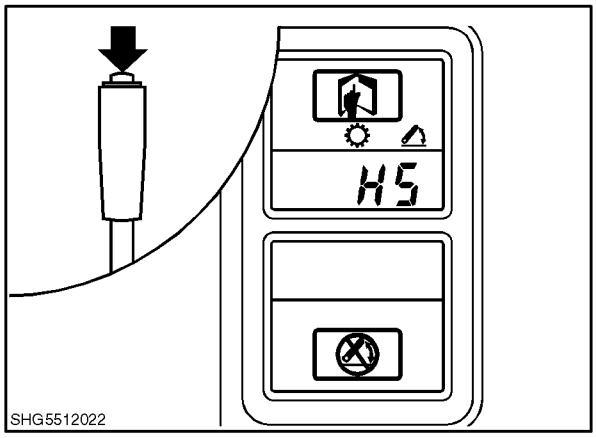

193

The display will then show “d0”.

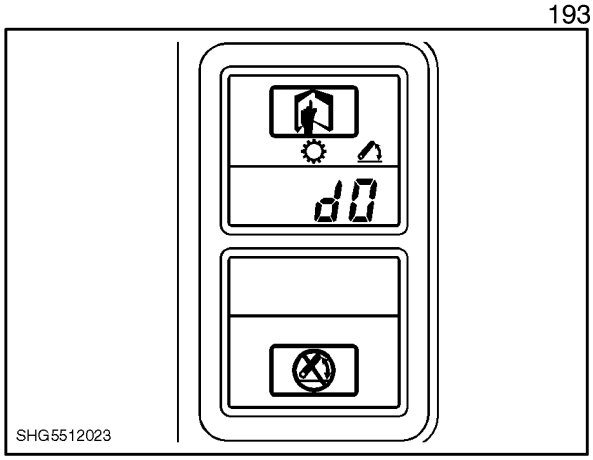

194

If a transmission or EDC switch is operated a code number will be displayed along with an audible tone to indicate correct operation.

If the code number and tone do not operate, the switch or wiring could be at fault.

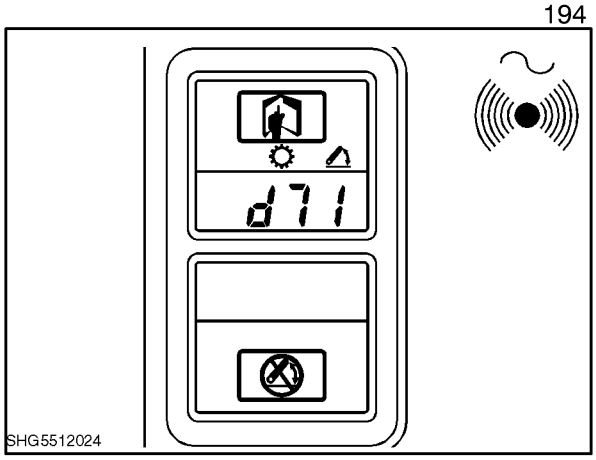

195

Switch Code	Switch Description
d71	Clutch Pedal Switch
d74	Dual Power Downshift Switch
d75	Dual Power Upshift Switch
d81	High/medium in Gear Switch
d82	Main in Gear Switch – 1/2 and 3/4 Gear Switches
d85	Neutral Start Switch
d91	Shuttle Dump Switch
d92	Hydraulic Oil Temperature Switch
d93	Fuse No. 12 Sense
d94	Manual Differential Switch
d95	Right Foot Brake Switch
d96	Left Foot Brake Switch
d99	Auto differential Lock Switch

H6 Select Rear Tyre Rolling Radius

Using a diagnostic lead, select H6 in the diagnostic menu.

The current radius will be displayed (in millimetres). On a new vehicle this will be the basic build tyre radius and will not need changing unless different size tyres are fitted.

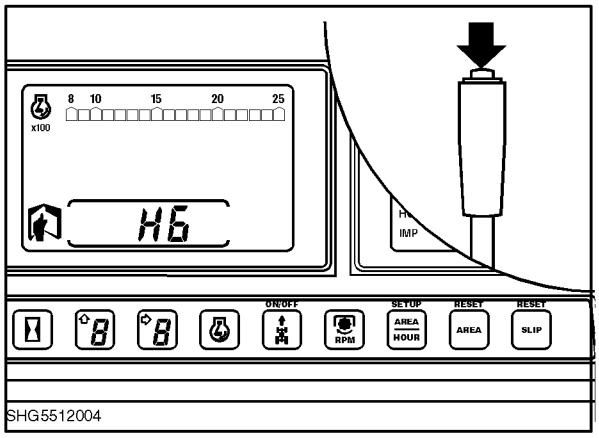

196

By pressing the Transmission Upshift button a larger radius may be selected and Downshift button selects a smaller radius. Use the buttons to select the value closest to the actual radius.

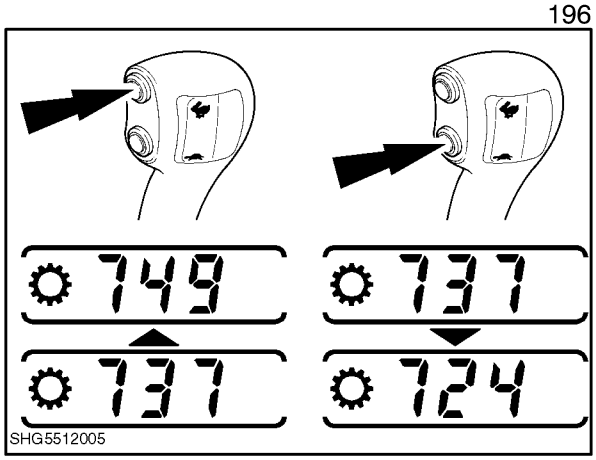

197

Find the rolling radius of the rear tyres of the vehicle using the table provided on the following page or if the tractor is fully built and tyres at the correct pressure the radius can be measured (in millimetres) from centre of rear axle to ground.

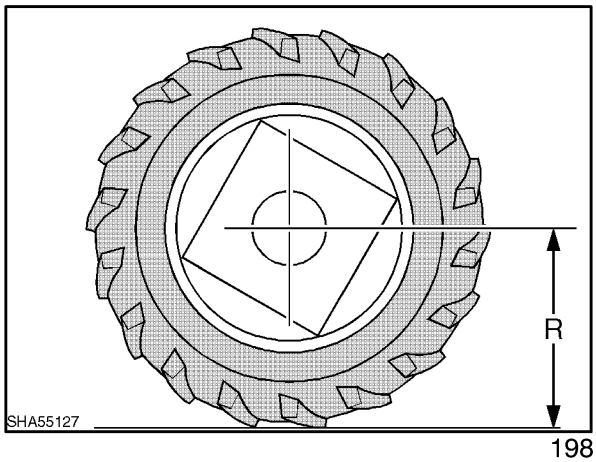

198

TYRE RADIUS INDEX FOR ROAD SPEED CALCULATION

Tyre Size Designation				Radius Index
8.3	-	24		470
	-	32		570
	-	36		620
	-	38		645
	-	44		720
9.5	-	20		445
	-	24		495
	-	28		545
	-	36		645
	-	38		670
	-	44		745
	-	48		795
11.2	-	20		465
	-	24		515
	-	28		565
	-	36		665
	-	38		690
12.4	-	20		490
	-	24		540
	-	28		590
	-	32		640
	-	36		690
	-	38		720
	-	46		820
13.6	-	24		560
	-	26		585
	-	28		610
	-	36		715
	-	38		740
14.9	-	24		590
	-	24	IND	580
	-	26		615
	-	28		640
	-	28	IND	630
	-	30		665
	-	38		765
15.5	-	38		745
16.9	-	24		620
	-	24	IND	610
	-	26		645
	-	28		670
	-	28	IND	660
	-	30		695
	-	34		745
	-	34	IND	730
	-	38		795
	-	42		845
17.5L	-	24	IND	580
18.4	-	24	IND	635
	-	26		670
	-	26	IND	665

Tyre Size Designation				Radius Index
18.4	-	28	IND	685
	-	30		720
	-	30	IND	715
	-	34		770
	-	38		820
	-	42		870
19.5L	-	24	IND	610
20.8	-	34		805
	-	38		855
	-	42		905
21L	-	24	IND	635
	-	30		720
23.1	-	26		760
	-	26	IND	750
	-	30		810
	-	34		860
24.5	-	32		855
28L	-	26		720
	30.5L		R32	860
	1050 / 50		R32	855
	800 / 60		R32	820
	440 / 65		R24	560
			R28	610
	480 / 65		R24	590
			R28	640
	540 / 65		R24	620
			R26	645
			R28	670
			R30	695
			R34	745
			R38	795
	600 / 65		R28	695
			R32	745
			R34	770
			R38	820
	650 / 65		R38	855
			R42	905
	750 / 65		R26	770
	800 / 65		R32	870
	260 / 70		R16	360
			R18	390
			R20	415
	280 / 70		R16	375
			R18	400
	300 / 70		R16	375
			R18	405
			R20	445
	320 / 70		R20	465
			R24	515
			R28	565
	360 / 70		R20	490

Tyre Size Designation				Radius Index
	360 / 70		R24	540
			R28	590
	380 / 70		R20	510
			R24	560
			R28	610
	400 / 70		R20	520
			R24	560
	420 / 70		R24	590
			R28	640
			R30	665
	460 / 70		R24	590
	480 / 70		R24	620
			R26	645
			R28	670
			R30	695
			R34	745
			R38	795
	500 / 70		R34	745
	520 / 70		R26	650
			R30	720
			R34	770
			R38	820
	540 / 70		R34	770
	580 / 70		R26	670
			R38	855
			R42	905
	600 / 70		R30	745
	620 / 70		R26	720
			R38	855
			R42	905
	650 / 70		R26	745
			R30	795
	680 / 70		R32	820
			R34	855
	710 / 70		R38	905
	340 / 75		R20	480
	380 / 75		R20	500
	620 / 75		R26	760
			R30	810
			R34	860
	650 / 75		R32	835
			R34	855
	680 / 75		R32	870
	710 / 75		R34	905
	210 / 80		R16	345
	250 / 80		R16	385
			R18	410
	260 / 80		R20	445
320 / 80		R18	IND	475

The Upshift and Downshift buttons pressed together will toggle the groundspeed display between Kph and Mph units. The default setting is Mph.

Once you have the radius and display units selected, key off and disconnect the diagnostic lead. This will store the details in Non-Volatile Memory (i.e. values will not be lost if battery is disconnected).

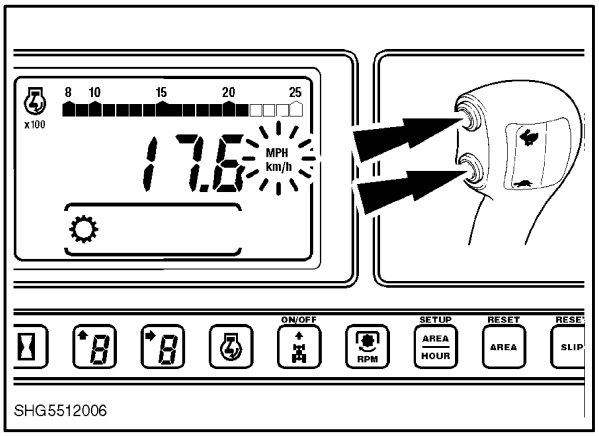

199

H7 Auto Radius Calibration
(400 foot / 122m dash)

Mark out a 400 foot / 122 metre distance on level ground.

Install the Test Switch and start the engine.

Select H7 with the test switch.

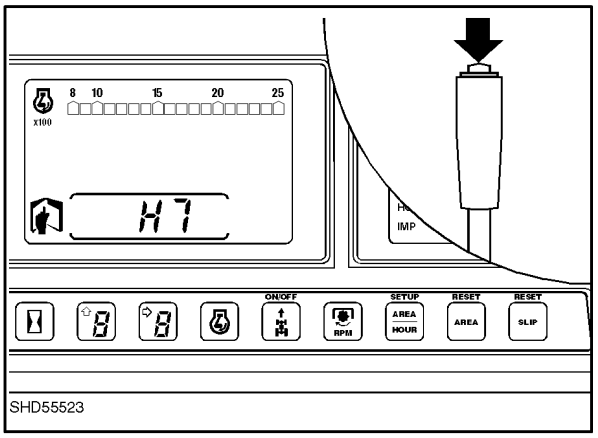

200

The display will change to show the current radius (in millimetres). On a new vehicle this will be the basic build tyre radius and will not need changing unless different size tyres are fitted.

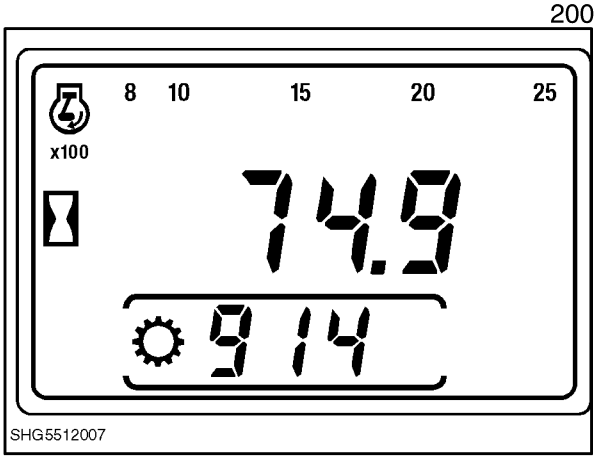

201

With the transmission in high range and main shift lever in gear 2.

Drive the tractor towards Start Line, as the front wheels cross the line press the Upshift button. The display will now show “Run”. Continue to the End line and as the front wheels cross, press the Downshift button.

The radius of the rear wheels will now be displayed.

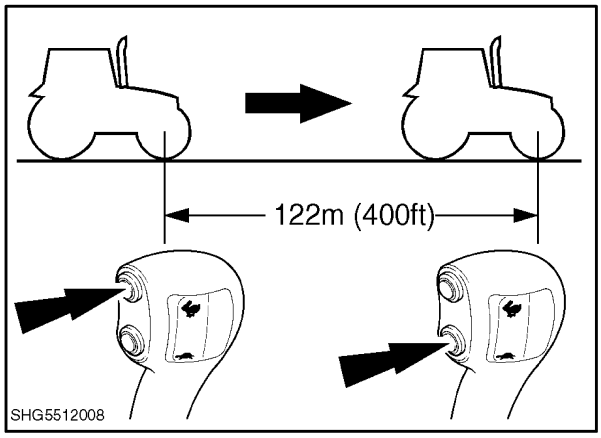

202

Further presses of the Downshift button will toggle the groundspeed display between Kph and Mph units. The default setting is Mph.

Once you have the radius and display units selected, key off to store the settings.

H8 Non Volatile Memory Reset

Select H8 with the test switch.

WARNING!
H8 WILL CLEAR ALL CALIBRATION VALUES AND STORED ERROR CODES

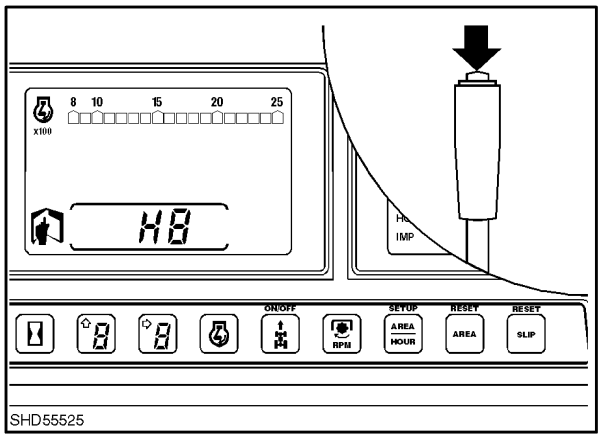

203

After selecting H8 the display will change to “EE” (Erase EPROM) automatically.

The display will then return to the “HH” screen.

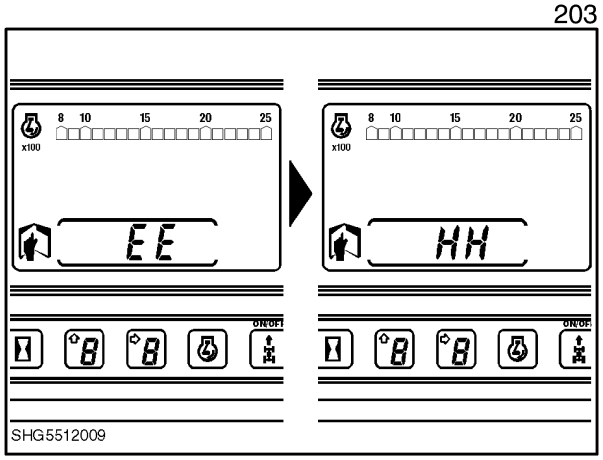

204

H9 Vehicle Sensor Operation Display

Select H9 with the test switch.

H9 allows various signals to and from solenoids, potentiometers etc. to be checked for both transmission and EDC systems.

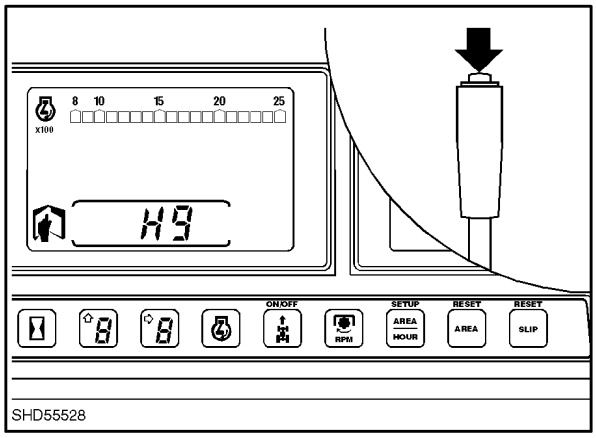

205

The required channel can be selected by using the up/downshift switches.

NOTE: 4 seconds after selecting a channel, the channel number will be replaced by a value for that channel.

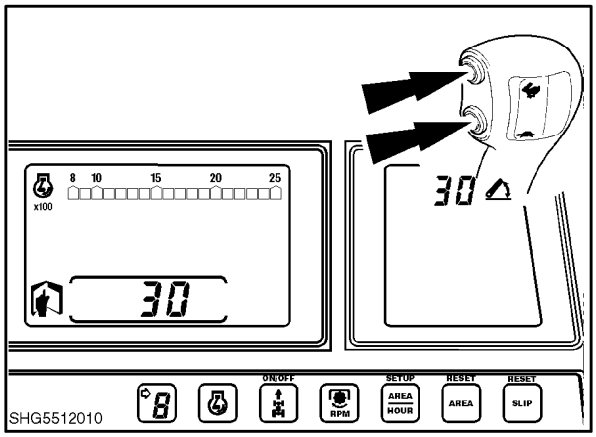

206

Channel Number	Description	Typical Approximate Values
0	Clutch Pedal position	91 Released, 26 Depressed
1	Transmission Oil Temperature	75 at 40°C
2	40°C Hydraulic Oil Switch	96 > 40°C, 2 < 40°C
3	Fuse 12 Sense	96
4	Not applicable to service	–
5	5 Volt Reference (Transmission Control)	49
6	12 Volt Vf Input (Fuse 13)	42
7	12 Volt Vd Input (Clutch Switch)	43
8	12 Volt Vh Input (Fuse 14)	43
9	8 Volt Reference (EDC Control)	79
10	Not used	–
11	Not applicable to service	–
12	Not applicable to service	–
13	Not applicable to service	–
14	Not used	–
15	Dump Solenoid Current Sense	0 Clutch engaged, out of gear 97 Clutch engaged, in gear
16	C1 Clutch Solenoid Current Sense	0 Clutch engaged, out of gear 82 Clutch pedal released in underdrive

Channel Number	Description	Typical Approximate Values
17	C2 Clutch Solenoid Current Sense	0 Clutch engaged, out of gear 82 Clutch pedal released in direct drive
18	EDC Valve Raise Solenoid Current	0-66
19	EDC Valve Lower Solenoid Current	0-66
20	Ground Speed Signal	64
21	Not used	-
22	Not used	-
23	Not used	-
24	Not used	-
25	Implement Status Lamp Sense	7 when illuminated
26	Wheel Slip Lamp Sense	7 when illuminated
27	Not used	-
28	Lift Arm Position Sensing Potentiometer	33 Lift Lowered 83 Lift Raised
29	Lift Control Lever Potentiometer	27 Fully Lowered 83 Fully Raised
30	Drop Rate Control Potentiometer	84 Turned Fully Clockwise 14 Turned Fully Counter Clockwise
31	Height Limit Control Potentiometer	84 Turned Fully Clockwise 14 Turned Fully Counter Clockwise
32	Position/Draft Sensitivity Potentiometer	84 Turned Fully Clockwise 14 Turned Fully Counter Clockwise
33	Slip Limit Control Potentiometer	84 Turned Fully Clockwise 14 Turned Fully Counter Clockwise
34	Right Hand Load Sensing Pin	48 When Implement not being used
35	Left Hand Load Sensing Pin	48 When Implement not being used

NOTE: To observe the values for channels 15, 16 and 17 the engine needs to be running and the appropriate gear selected.

The values quoted are approximate typical values and these may vay slightly from tractor to tractor. Allow up to 10% on the figures quoted.

Explanations:

Vf Input: This is the input voltage into the microprocessor to transmission components not directly affected by the clutch pedal switch, i.e. Dump solenoid, Diff lock solenoid and four wheel drive solenoid

Vd Input: This is the input voltage into the microprocessor to transmission components which are affected by the clutch pedal switch, i.e. PWM solenoids C1 and C2.

Vh Input: This is the input voltage into the microprocessor for EDC components, i.e. Raise and Lower solenoids.

HA Clutch Pedal Position Display and Oil Temperature

Select HA with the test switch.

Up and down buttons to select temperature.

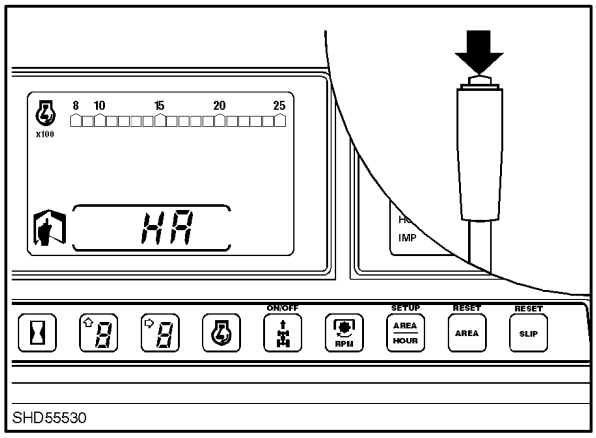

207

The position of the clutch pedal can then be monitored.

Use this mode to correctly set up the clutch pedal switch. The switch should operate between 8 (down click) and 14 (upwards click).

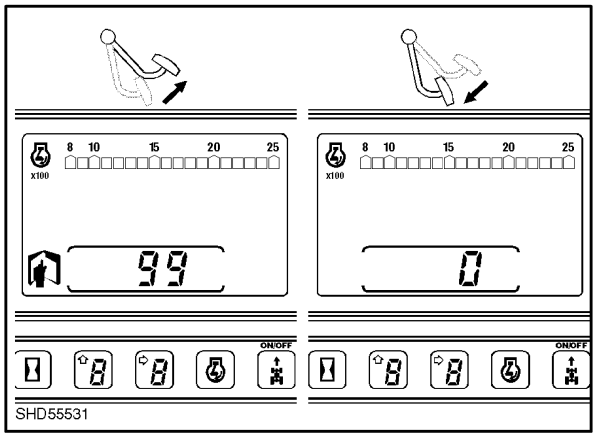

208

HB View Stored Error Codes

Select HB with the test switch.

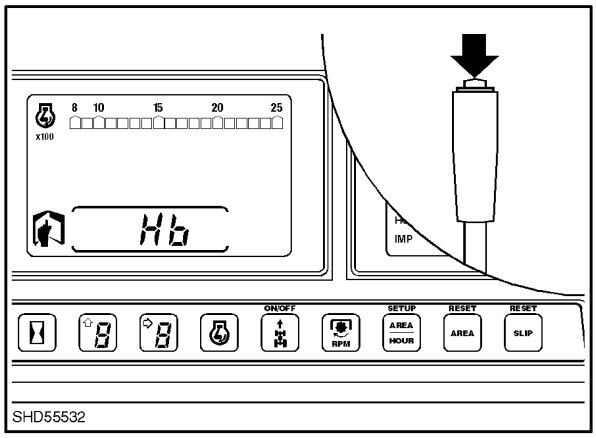

209

The most recent error code will be displayed.

Up to 30 error codes can be stored. This display mode sorts the error codes so that the errors which occurred most recently are displayed first.

Hours shown are the hours since the occurrence of the error code.

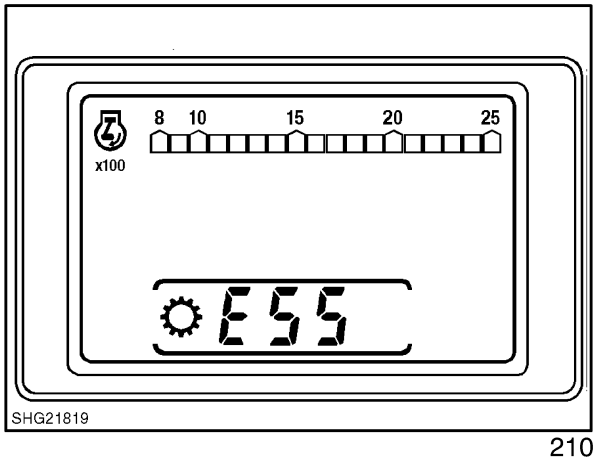

210

To view the hours of the last occurrence depress and hold the upshift button.

Continue to hold the upshift button and after 2 seconds of displaying the hours, the screen will go blank then the number of occurrences will be displayed.

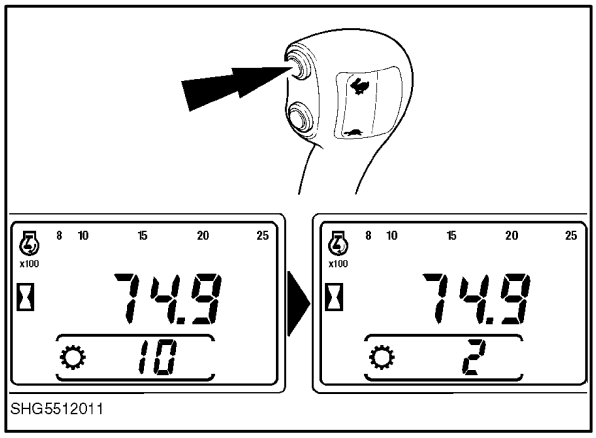

211

To select the next stored error code press the downshift.

NOTE: *Ongoing error conditions will be counted each time the key switch is turned on. For example, E51 (temperature sensor open circuit) could show a large number of occurrences simply because the circuit has been open for months, and the error was detected each time the tractor was started.*

To return to the 'top' of the list depress both up and downshift buttons together.

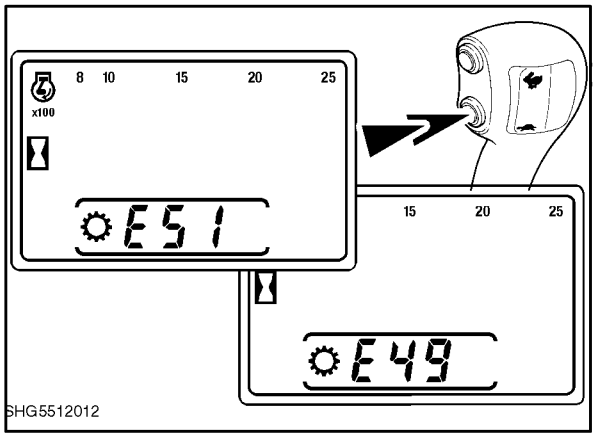

212

When there are no more error codes to select the display will show three dashes.

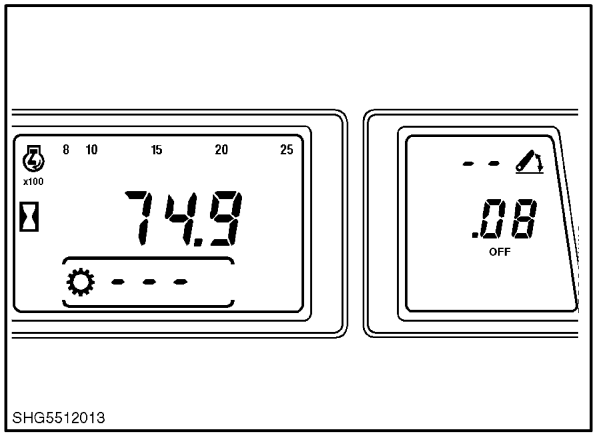

213

HC Clear Stored Error Codes

This mode functions like 'H8' but only clears stored error codes. Calibration values are not affected.

Select HC with the test switch.

The dispaly will go blank, show 'EE' go blank again and then return to 'HH'.

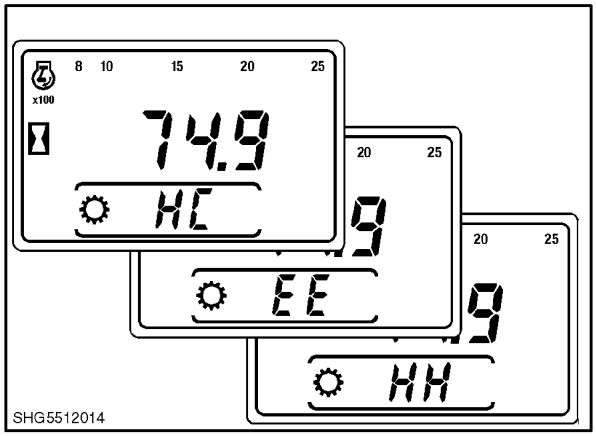

214

HD View Live Error Codes

Select HD with the test switch.

After a few seconds the display will revert to normal operating mode.

This mode allows normal tractor operation, but any detected errors will cause an error code to be displayed, whether they are disabling or not.

Key off, then on, to reset system to normal operation, i.e. only disabling error codes displaying.

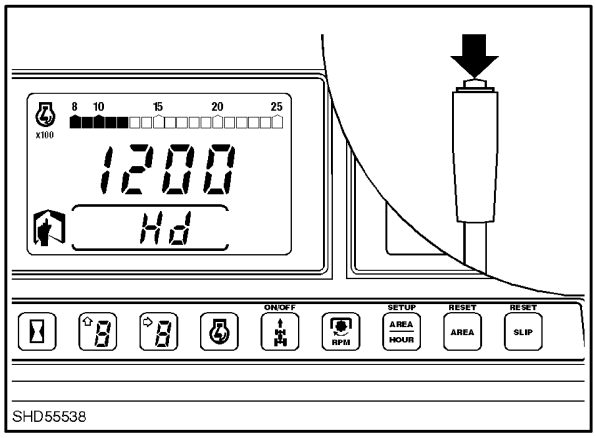

215

HE Clutch Quick Fill Adjustment

Warm the oil to normal operating temperature, at least 60 degrees Celsius.

Park the tractor on a level surface. Allow some space, as the tractor will move during testing.

With the diagnostic switch installed, start the engine and set the engine speed to 1200 rpm. Select diagnostic mode HE.

The unit will not enter fill time calibration if oil is not at the correct temperature.

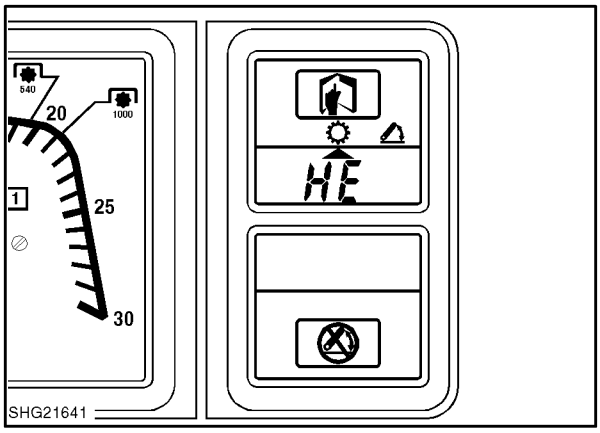

216

If the oil temperature is less than 60 degrees Celsius, ”F1” will be displayed, Alternating with display of oil temperature. This display WILL NOT GO AWAY unless the oil temperature reaches 60 degrees.

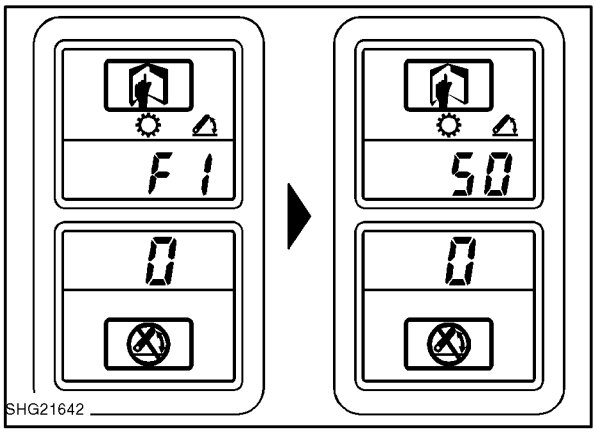

217

CLUTCH SELECTION:

While the 1-4 lever is in neutral, press the downshift switch to select the Lo clutch or press the upshift switch to select the Hi clutch. The selected clutch will be indicated at all times by an L or an H in the left digit of the transmission LCD display. The number to the right of the L or H indicates the quickfill duration for the selected clutch.

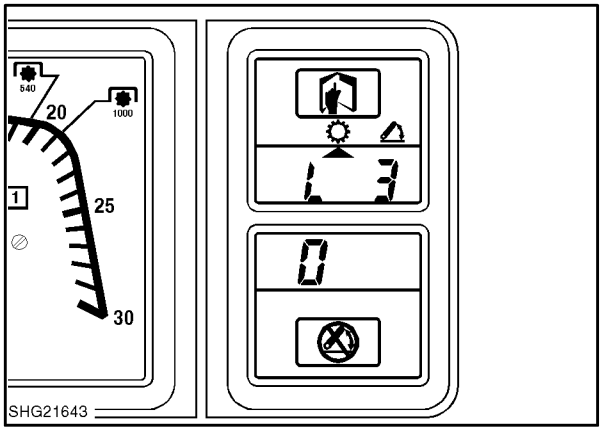

218

ADJUST AND TEST CLUTCHES

Shift the main shift lever into gear (no need to use the clutch pedal, the clutches are all dumped), then use the shuttle dump button or the clutch pedal, shift the shuttle lever into gear, Release the hand brake and **SLOWLY** release the clutch pedal until the tractor “moves” (approx 20 % of pedal travel).

Observe whether the tractor nudges at the beginning of clutch engagement. If there is no nudge, the quickfill duration should be increased until there is a slight nudge.

If the nudge is more of a jerk, the quick fill duration should be decreased.

The factory setting is 3.

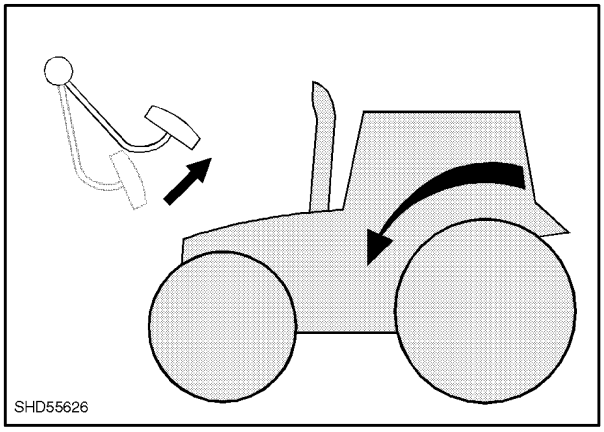

219

To adjust the quickfill duration, depress the clutch pedal or shift the shuttle lever to neutral (but leave the main shift lever in gear), then use the upshift and downshift switches to increase or decrease the number on the display.

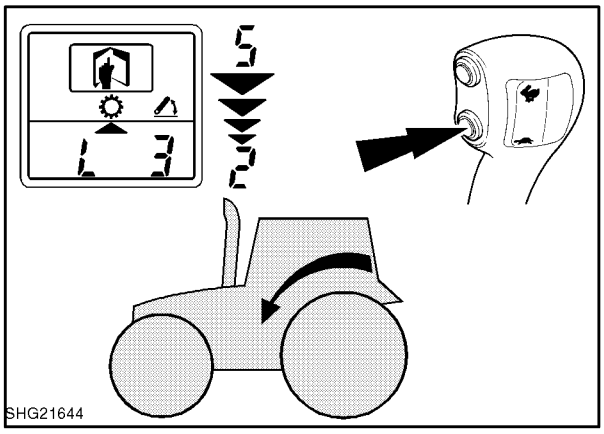

220

HF Clutch Spring Pressure Calibration

Connect diagnostic test switch 4FT950.

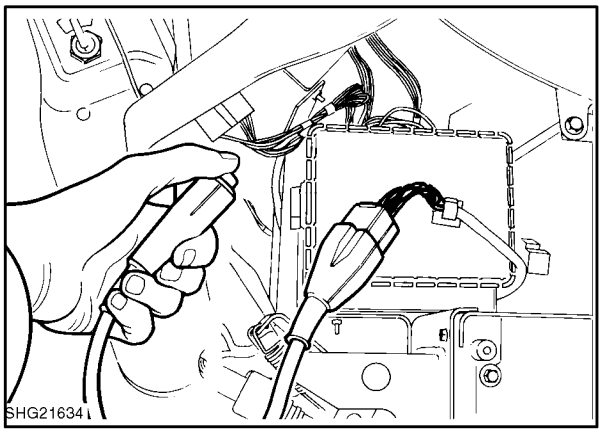

221

Start the engine.
Select mode HF, using the test switch.

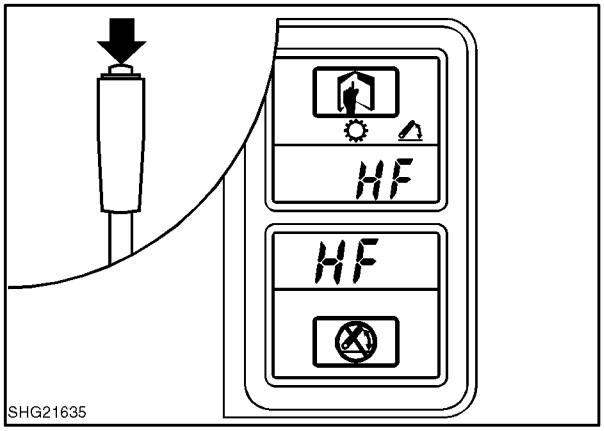

222

”CAL” will be displayed for a few seconds, then the display will be controlled by clutch pedal position as follows:
Pedal down (below 10%) – Calibration value for the selected clutch is displayed.
Pedal up (above 98%) – Oil temperature is displayed.
Pedal between 10% and 98% – Pedal position is displayed.

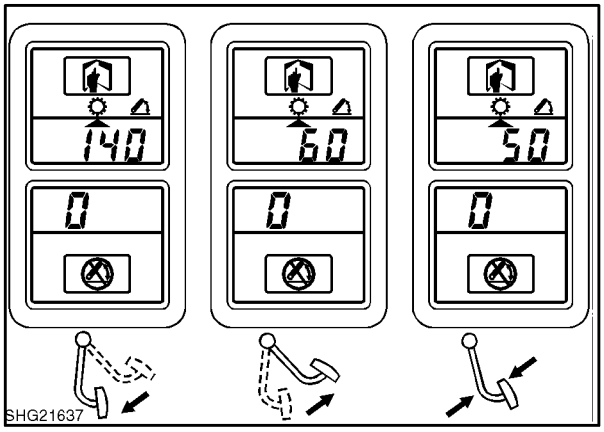

223

Set engine speed to 1200 +/– 100 rpm.

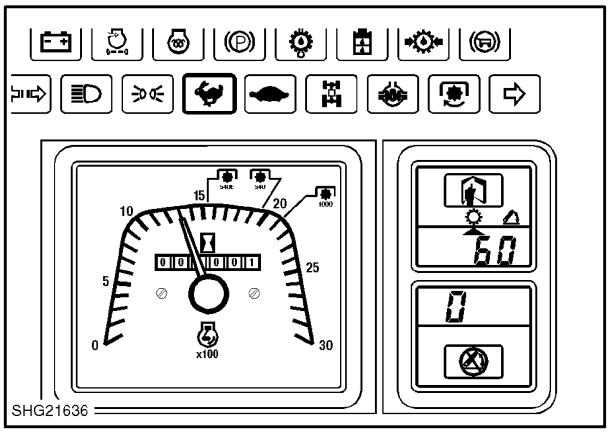

224

1. To select the clutch to be calibrated, shift the main (1–4) lever to neutral and press the upshift switch to select the high clutch, or press the downshift switch to select the low clutch. The selected clutch is indicated by the tortoise and hare lamps.

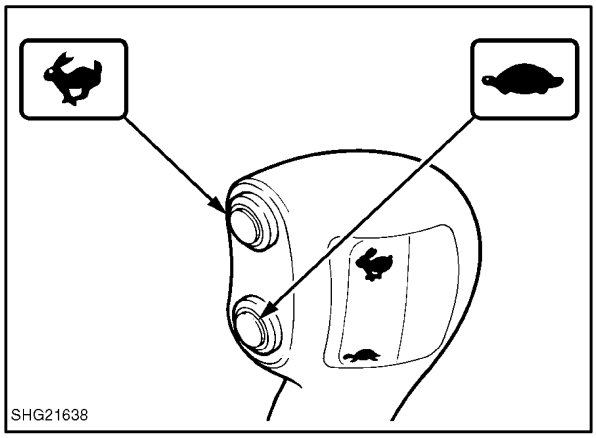

225

2. Depress the clutch pedal, select a gear and range, and slowly release the pedal to check the engagement point.

Note 1: *Releasing the pedal beyond 35% will not further increase the clutch pressure.*

Note 2: *If the pedal is released above 90%, the clutch pressure will dump after a few seconds. Fully depress the pedal to restore operation.*

Note 3: *If the calibration value has previously been set too high, the clutch may engage and move the tractor, particularly if a low gear has been selected and the brake is not firmly engaged. If calibration is required because a PWM valve has been replaced, the calibration number should be reduced to 110 or less before releasing the clutch pedal, as the old calibration value may be much too high*.

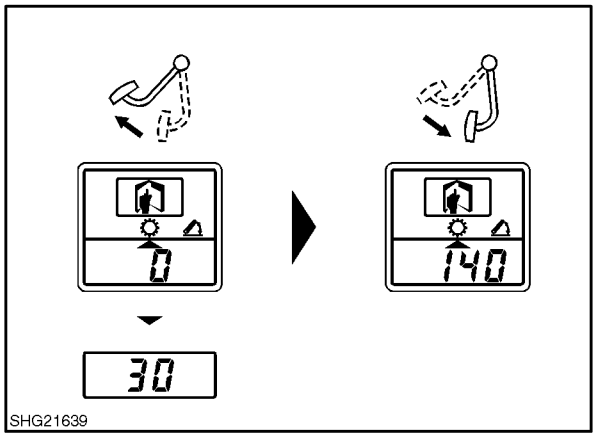

226

3. Use the upshift switch to increase the calibration value or use the downshift switch to decrease the calibration value as required to move the clutch engagement point to 35% pedal travel. The value can be adjusted even when it is not being displayed.
4. After calibrating both clutches, turn off the key switch for at least 1 second to store the calibration values.

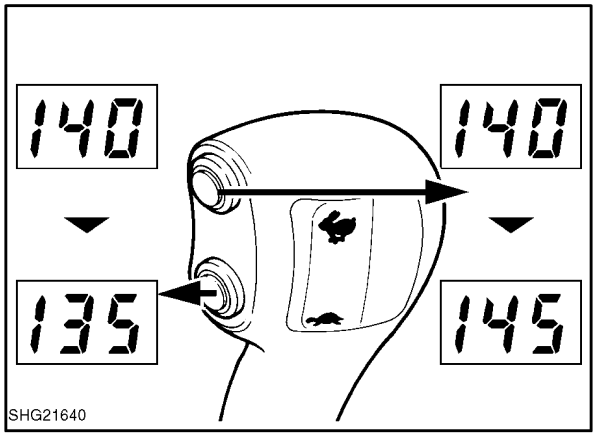

227

Electronic Draft Control (EDC) – 'H' Routines
The EDC 'H' routine consists of the following H menu codes:

HH	Service Menu	Page
H1	EDC Calibration Procedure	35
H2	EDC Disable	36
H3	EDC Valve Calibration review	37
H4	Software review (as transmission)	38
H5	Switch Test	39
H8	Non volatile memory reset	40
H9	Voltmeter (as transmission)	40

H1 EDC Calibration Procedure

Disconnect the Automatic Pick Up Hitch (APUH) rods.

Lower linkage using control lever & connect to suitable weights (approx 200Kg) capable of overcoming any binding within the system.

Install the diagnostic switch, Tool No.4FT.950 or start the engine with the raise/work/lower switch depressed to enter the calibration mode, H1.

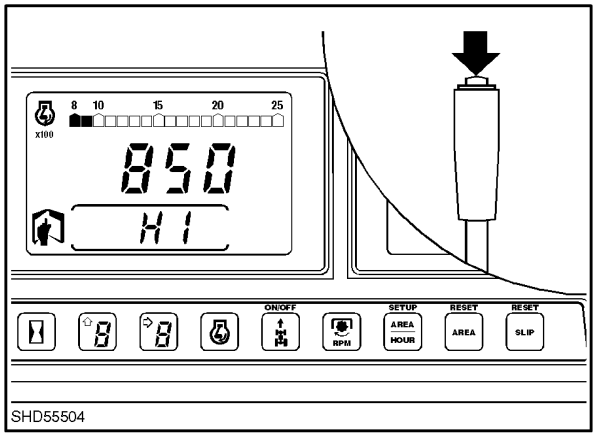

228

The instrument cluster EDC display will show 'CAL'.

Set the engine speed to 1200 +/– 100 rpm

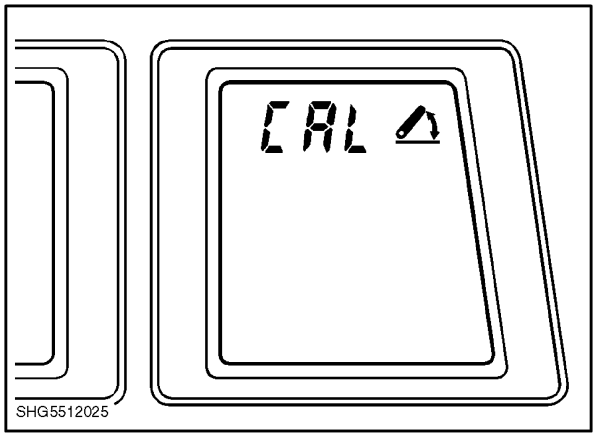

229

Set all EDC panel potentiometers fully clockwise

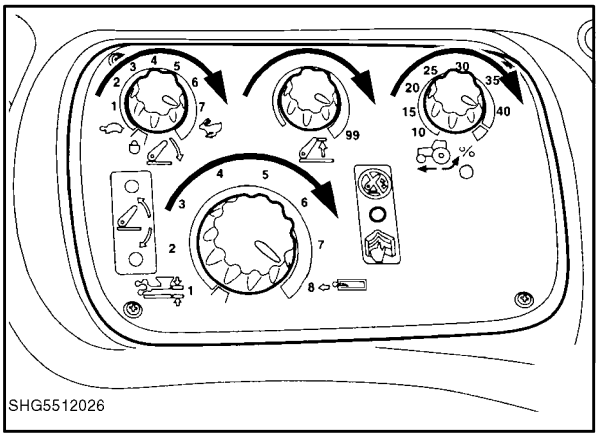

230

Move the lift lever to the fully lowered position.

Pull the lever to the top of its travel and allow arms to fully raise. Check that the display increases to 99.

Reconnect and adjust the APUH rods. Adjust the length of the rods so that when the lift is fully raised using the external fender switches the lift rods are slightly loose. Check that the APUH operates correctly

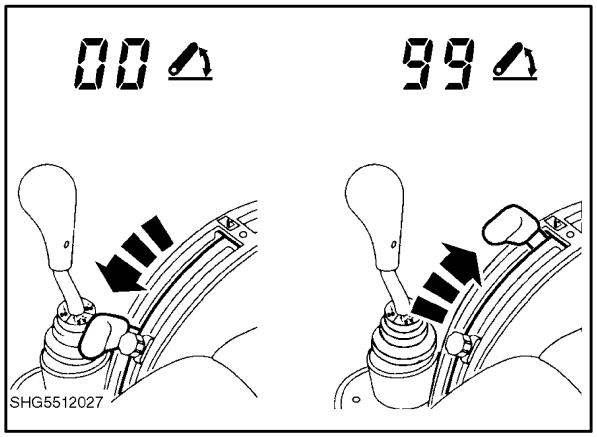

231

Lower the control lever to 70% to 90% to start valve calibration sequence. During calibration the linkage is automatically raised & lowered a small amount 3 times, which takes 2-3 minutes. Each raise & lower is accompanied by a count on the display 0-1-2. When display indicates "end" the calibration is complete.

Key off to store calibration values

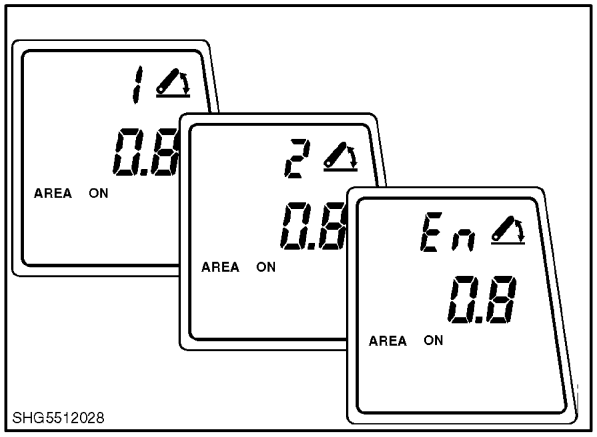

232

H2 EDC Disable

To prevent false EDC error codes on tractors not fitted with EDC it is possible to disable the test which looks for sensors fitted. This can be used to overcome concerns where water and corrosion affects unused connectors.

Select H2 with the test switch

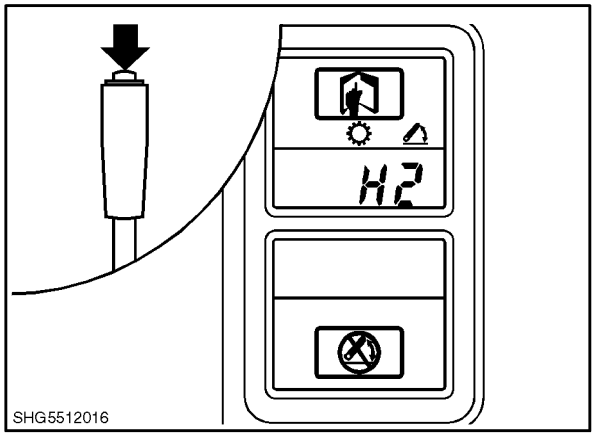

233

EDC Disable:

Wait until H2 is cleared from the display, as the transmission clutch pressure values are being displayed, press the main shift lever upshift and downshift switches together. The EDC display should now be disabled.

Key off and remove test switch.

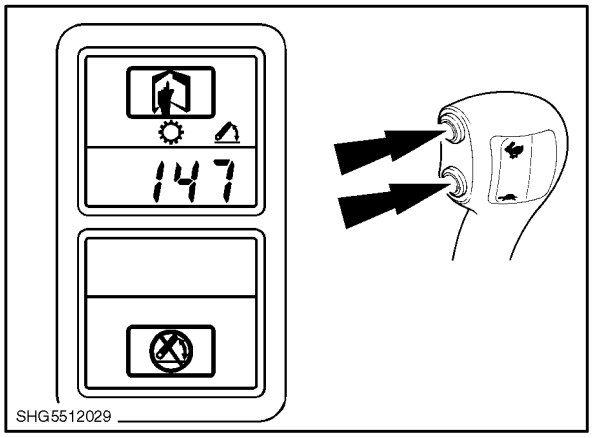

234

EDC Re-enable:

WARNING!
H8 WILL CLEAR ALL CALIBRATION VALUES AND STORED ERROR CODES

Enter H8 diagnostic mode using diagnostic lead.

Once EE has flashed twice to indicate clearing of calibration values key off.

Re-calibrate transmission clutches and EDC as previously described in this section.

The processor will now have EDC enabled.

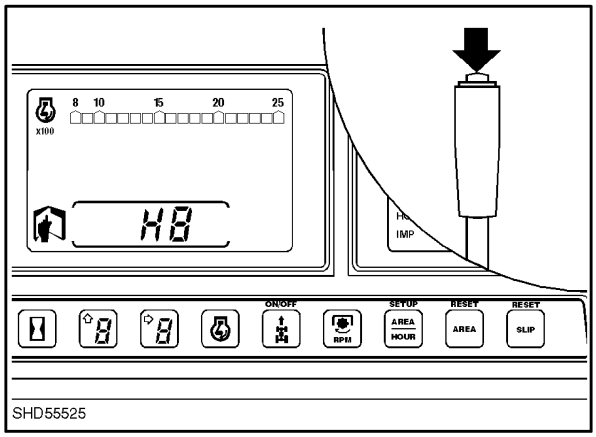

235

H3 EDC Valve Calibration Review

Select H3 with the test switch.

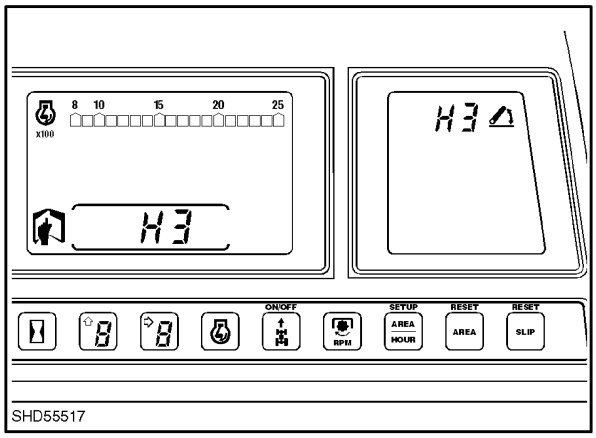

236

The display will show the solenoid calibration values (milliamps) for raise first and then lower.

NOTE: *The default value is 50, other values indicate that a calibration has been performed.*

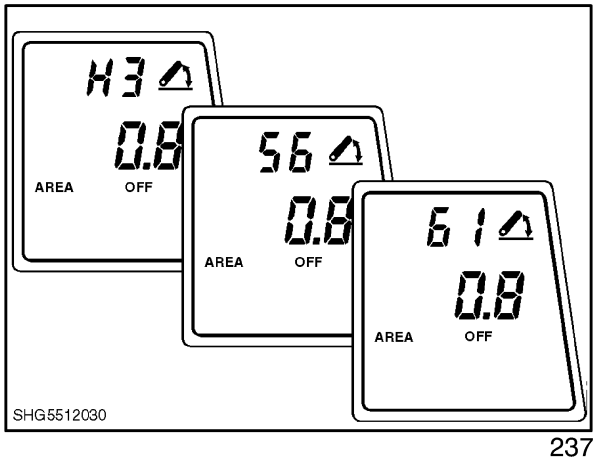

237

After a few seconds the display will show an 'r' followed by a number between 0 and 3.

This indicates the number of assist rams fitted. This can be adjusted by toggling the raise/work switch between the work and raise positions until the correct figure for the tractor build is shown.

This is important to ensure correct operation of the EDC system.

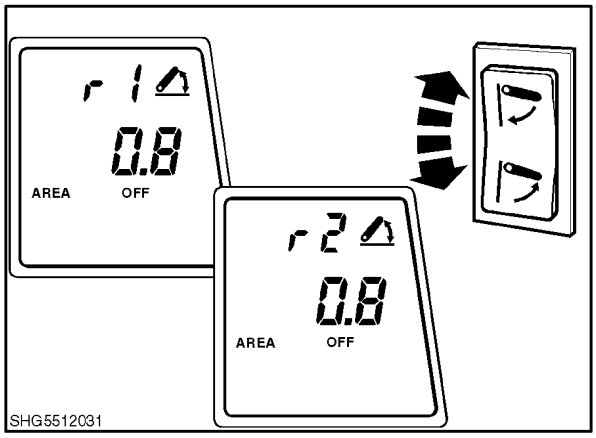

238

H4 Software Revision Level

Select H4 with the test switch.

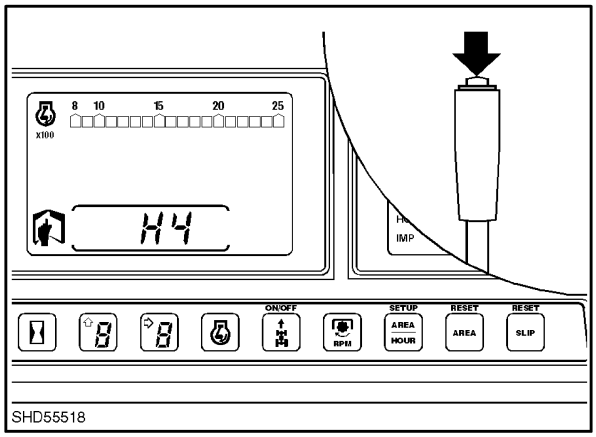

239

The display will automatically display:

AE 24x24 dual command transmission
82 Software level
01 Prototype software (if any)

and then return to "HH" screen.

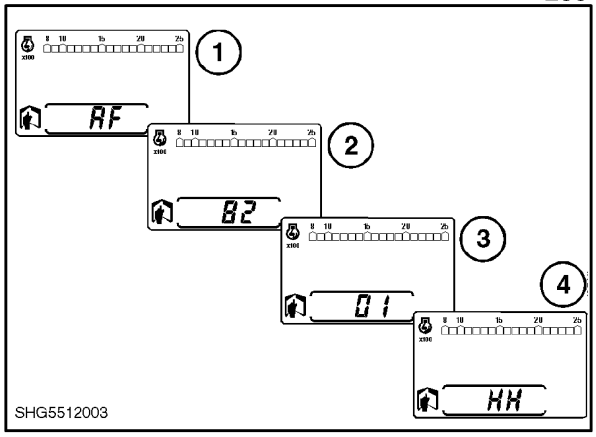

240

H5 Transmission/EDC Switch Test

Select H5 with the test switch.

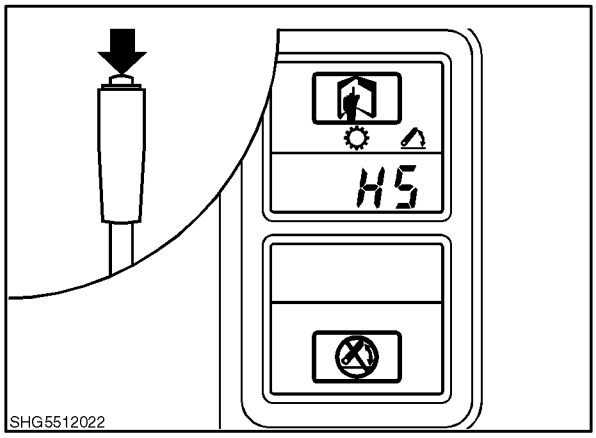

241

The display will then show “d0”.

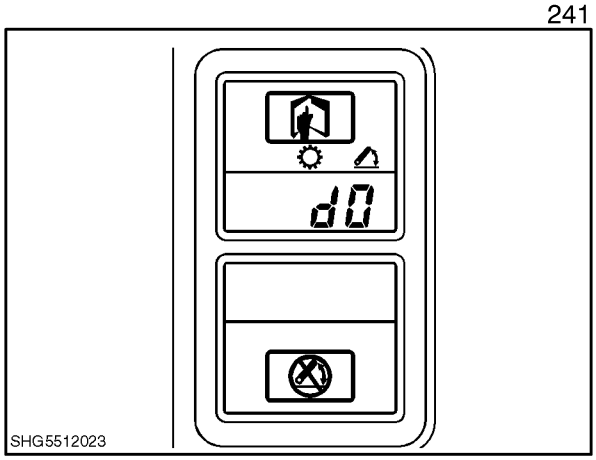

242

If a transmission or EDC switch is operated a code number will be displayed along with an audible tone to indicate correct operation.

If the code number and tone do not operate, the switch or wiring could be at fault.

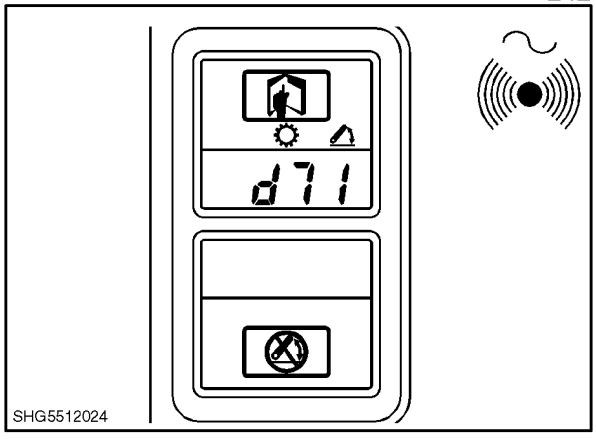

243

Switch Code	Switch Description
d1	External Fender switch – Lower
d2	External Fender switch – Raise
d3	Raise/work/Lower internal switch – Raise
d4	Raise/work/Lower internal switch – Work
d5	Raise/work/Lower internal switch – Lower

H8 Non Volatile Memory Reset

Select H8 with the test switch.

WARNING!
H8 WILL CLEAR ALL CALIBRATION VALUES AND STORED ERROR CODES

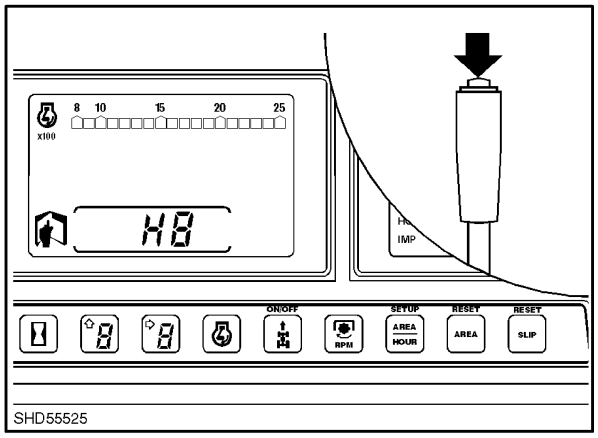

244

After selecting H8 the display will change to “EE” (Erase EPROM) automatically.

The display will then return to the “HH” screen.

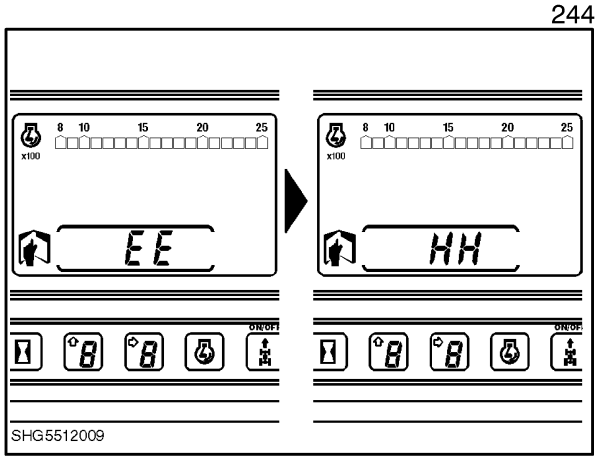

245

H9 Vehicle Sensor Operation Display

Select H9 with the test switch.

H9 allows various signals to and from solenoids, potentiometers etc. to be checked for both transmission and EDC systems.

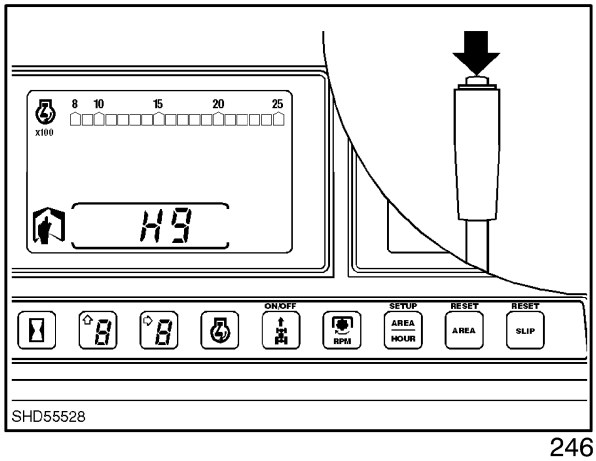

246

The required channel can be selected by using the up/downshift switches.

NOTE: 4 seconds after selecting a channel, the channel number will be replaced by a value for that channel.

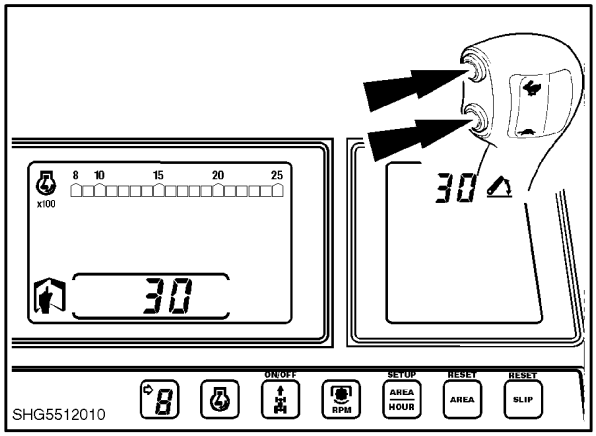

247

Channel Number	Description	Typical Approximate Values
2	40°C Hydraulic Oil Switch	96 > 40°C, 2 < 40°C
3	Fuse 12 Sense	96
4	Not applicable to service	-
5	5 Volt Reference (Transmission Control)	49
8	12 Volt Vh Input (Fuse 14)	43
9	8 Volt Reference (EDC Control)	79
10	Not used	-
11	Not applicable to service	-
12	Not applicable to service	-
13	Not applicable to service	-
14	Not used	-
18	EDC Valve Raise Solenoid Current	0-66
19	EDC Valve Lower Solenoid Current	0-66
20	Ground Speed Signal	64
21	Not used	-
22	Not used	-
23	Not used	-
24	Not used	-
25	Implement Status Lamp Sense	7 when illuminated
26	Wheel Slip Lamp Sense	7 when illuminated
27	Not used	-
28	Lift Arm Position Sensing Potentiometer	33 Lift Lowered 83 Lift Raised
29	Lift Control Lever Potentiometer	27 Fully Lowered 83 Fully Raised
30	Drop Rate Control Potentiometer	84 Turned Fully Clockwise 14 Turned Fully Counter Clockwise
31	Height Limit Control Potentiometer	84 Turned Fully Clockwise 14 Turned Fully Counter Clockwise
32	Position/Draft Sensitivity Potentiometer	84 Turned Fully Clockwise 14 Turned Fully Counter Clockwise
33	Slip Limit Control Potentiometer	84 Turned Fully Clockwise 14 Turned Fully Counter Clockwise
34	Right Hand Load Sensing Pin	48 When Implement not being used
35	Left Hand Load Sensing Pin	48 When Implement not being used

The values quoted are approximate typical values and these may vay slightly from tractor to tractor. Allow up to 10% on the figures quoted.

Explanations:

Vf Input: This is the input voltage into the microprocessor to transmission components not directly affected by the clutch pedal switch.

Vd Input: This is the input voltage into the microprocessor to transmission components which are affected by the clutch pedal switch.

Vh Input: This is the input voltage into the microprocessor for EDC components, i.e. Raise and Lower solenoids.

WIRING DIAGRAMS

CONTENTS

Description

Wiring diagram references

How to use the linear wiring diagrams

Symbols

Component identification and wiring diagram location key

Wire identification key

Line Reference Range

Circuit 1 Starting, Charging, Thermostart, Fuel Injection Pump 10-360
With cab Electroshift with EDC
With cab Dual Command with EDC
With cab Dual Command Less EDC

Circuit 2 Transmission and EDC Processor (C128 Black Connector) 370-720
With cab Electroshift with EDC, part 1
Circuit 2-A Transmission and EDC Processor (C128 Black Connector) 370-720
With cab Dual Command with EDC , part1
Circuit 2-B Transmission and EDC Processor (C128 Black Connector) 370-720
With cab Dual Command Less EDC, part 1

Circuit 3 Transmission and EDC Processor (C128 Black Connector) 730-1080
With cab, Electroshift and Dual Command with EDC, part 2
Circuit 3-B Transmission and EDC (C128 Black Conncetor)
With cab, with Dual Command Less EDC, part 2 730-1080

Circuit 4 Transmission and EDC Processor (C127 Red Connector)
With cab, Electroshift with EDC, part 1 1090-1440
Circuit 4-A Transmission and EDC Processor (C127 Red Connector)
With cab, Dual Command With EDC, part 1 1090-1440
Circuit 4-B Transmission and EDC Processor (C127 Red Connector)
With cab, Dual Command Less EDC, part 1 1090-1440

Cicuit 5 Transmission and EDC Processor (C127 Red Connector)
With cab, Electroshift With EDC, part 2 1450-1800
Circuit 5-A Transmission and EDC Processor (C127 Red Connector)
With cab, Dual Command With EDC part 2 1450-1800
Circuit 5 B Transmission and EDC Processor (C127 Red Connector)
With cab, Dual Command Less EDC part 2 1450-1800

Circuit 6 Electronic Instrument Cluster and associated sensors (C079) 1810-2170
With cab Electroshift with EDC
With Cab Dual Command With EDC
With cab Dual Command Less EDC

Circuit 7 Electronic Instrument Cluster and associaited sensors
With Cab Electroshift With EDC (C080) 2180-2530
Circuit 7-A Electronic Instrument Cluster and associated sensors
With cab Dual Command with EDC (C080) 2180-2530
Circuit 7-B Electronic Instrument Cluster and associated sensors
With cab Dual Command Less EDC (C080) 2180-2530

Circuit 8 Electronic Instrument Cluster (C081)
With cab Electroshift with EDC
With Cab Dual Command With EDC
With cab Dual Command Less EDC 2540-2890

Circuit 9 Four Wheel Drive and Differential Lock 2900-3260
With cab Electroshift with EDC
With cab Dual Command with EDC
With cab Dual Command Less EDC

Circuit 10 Power Take Off 3270-3620
With cab Electroshift with EDC
With cab Dual Command with EDC
With cab Dual Command Less EDC

Circuit 11 Transmission Circuits 3630-3990
With cab Electroshift with EDC
Circuit 11-A Transmission Circuits 3630-3990
With cab Dual Command with EDC
With cab Dual Command Less EDC

Circuit 12 Electronic Draft Control 4000-4360
With cab Electroshift with EDC, part1
With cab Dual Command with EDC, part1 4000-4360
Circuit 12 Electronic Draft Control
With cab Dual Command Less EDC, part1 4000-4360

Circuit 13 Electronic Draft Control
With Cab Electroshift with EDC, part2
With cab Dual Command with EDC, part2 4370-4730
Circuit 13-B Electronic Draft Control
With cab Dual Command Less EDC, part2 4370-4730

Circuit 14 Indicator & Hazards 4740-5100
With cab Electroshift with EDC
With cab Dual Command with EDC
With cab Dual Command Less EDC

Circuit 15 Main Lights 5110-5470
With cab Electroshift with EDC
With cab Dual Command with EDC
With cab Dual Command Less EDC

Circuit 16 Work Lamps 5480-5840
With cab Electroshift with EDC
With cab Dual Command with EDC
With cab Dual Command Less EDC

Circuit 17 Wipers & Washers 5850-6210
With cab Electroshift with EDC
With cab Dual Command with EDC
With cab Dual Command Less EDC

Circuit 18 Air-Conditioning & Cab 6220-6570
With cab Electroshift with EDC
With cab Dual Command with EDC
With cab Dual Command Less EDC

Circuit 19-21 Cab Accessories 6580-7290
With cab Electroshift with EDC
With cab Dual Command with EDC
With cab Dual Command Less EDC

HOW TO USE THE LINEAR WIRING DIAGRAMS

The wiring diagrams have been drawn in a linear style. This means that the complete TS Tractor wiring has been drawn over a number of pages.

There are a number of guides to help assist in reading and understanding the wiring diagrams.

6. Wiring diagram contents. All diagrams (1) are located on the right hand page, A3 fold outs are used on the larger circuits. The front page of the A3 fold outs have the circuit description, and the line reference range indicated. Located on the left hand page (2) is the key of components used (3) on the adjacent wiring diagram, (And brake down of the function of the terminals of relevant component). On the bottom of the page (4) is the wire colour code chart, and in the left hand corner (5) the line reference range it refers to.

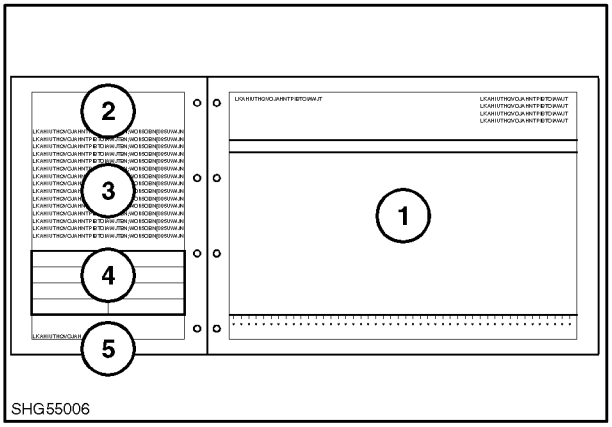

7. Every component and connector has its own reference number.

8. Every wire has a code assigned to it (1) this code refers to its function, the code is not marked on the actual wire. A key of all wire codes can be found at the rear of this section letters (2), (3) and (4) indicate the wire colour. The first letter (2) indicates the main wire colour. The second letter (3) indicates tracer wire colour, the third letter (4) indicates the band colour, for example wire reference (5) and number 57 is a earth wire, letter (6) B indicates its a solid black wire.

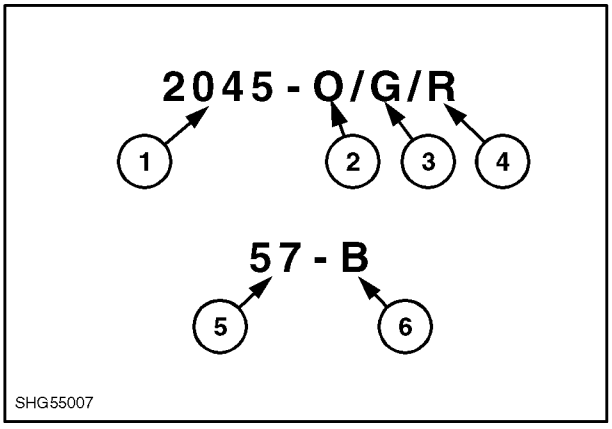

9. Each component and connector pin appears only once in the electrical drawings and has its own location point on the page.

10. The wiring diagrams are drawn in sections. However where a single component is used in a number of circuits such as a processor or multi function switch, it is drawn either on its own or on the circuit which it influences the most.

11. The wiring is drawn between three lines two across the top of the page and one at the bottom of the page.

    The upper most line (1) marked with +30 is the constant live line.
    Below the +30 line is the +15 (2) which is the ignition key on live line.
    On the lower part of the page (3) a line is marked with numbers increasing by ten (10-20-30, etc.). This is the line used to reference wires and components.

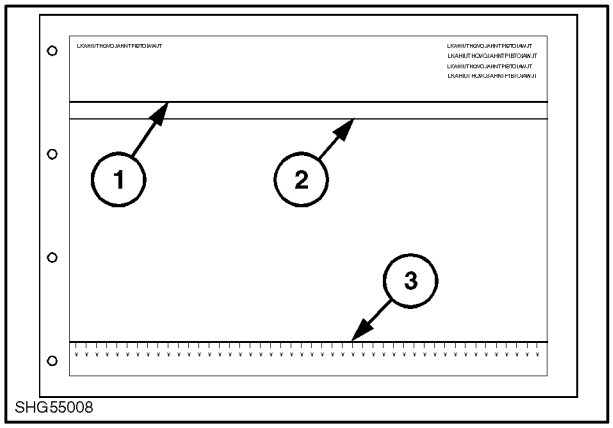

SHG55008

12. In the first top left hand corner is the serial number (1) of the machine that the drawing applies to. If there is a change to the wiring, new diagram is added and the serial number range it applies to is indicated.

13. In the top right hand corner is the model type (1) of the machine which the diagram applies to.

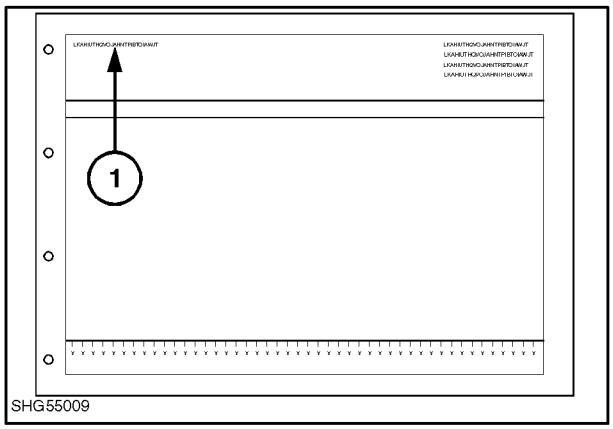

SHG55009

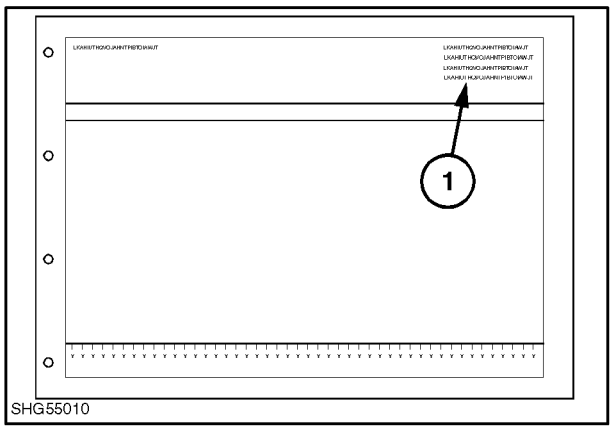

SHG55010

Example

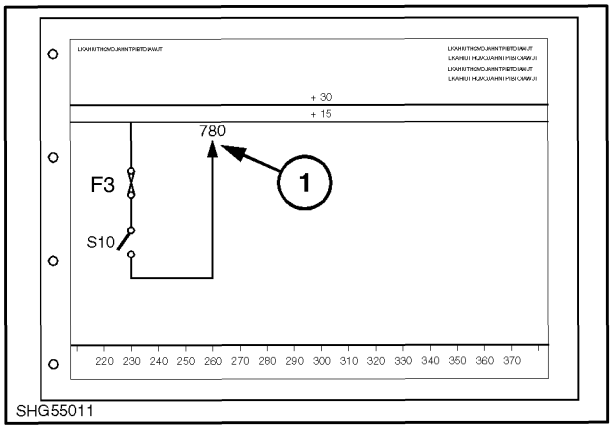

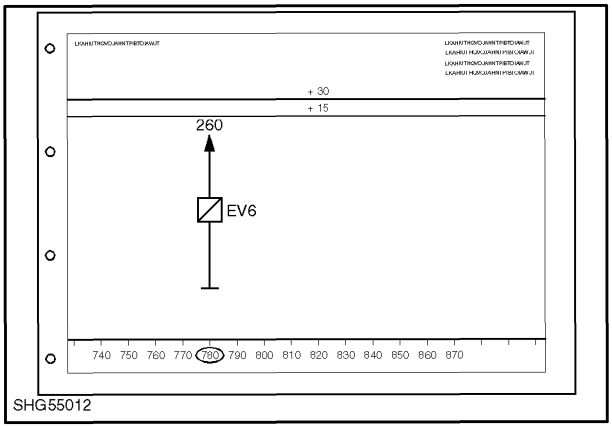

The above drawing shows a basic circuit drawn over two pages.

Power comes in from the ignition on live line +15 through fuse F3, which is located at point 230.

Power comes to switch S10. If the switch is operated, power continues up and stops with an arrow (1) and a number. The arrow indicates the wire continuing to another page. The Number 780 refers to the line reference where it appears on a new page. Note the line reference directly below the wire being traced ie. 260. Following the line reference until 780 is found. Using either the index or following the page reference line. When 780 is located on the reference line the number 260 will be observed at the top of the page. Note the arrow points back to the previous part of the circuit. From this point follow the wire down to solenoid EV6. The diagram now indicates that power goes to ground.

Symbols

Fuse

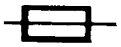

Relay

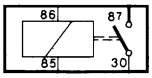

Elector-Valve/solenoid

Motor

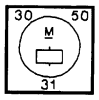

Earth point

Sensor

Potentiometer

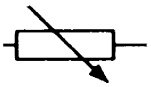

Lamp

Resistor

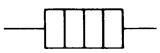

Speaker

Connector pin

UNIVERSAL SYMBOLS

Thermostart starting aid

Alternator charge

Fuel level sender

Automatic Fuel shut-off solenoid

Engine oil pressure switch & sender

Engine coolant temperature sender

Tractor lights

Headlamp

Work lamps

Stop lamps

Horn

Radio

Turn signals

Front wind-screen wash/wipe switch

Rear wind-screen wash/wipe switch

Blower motor Heater fan

Air conditioner compressor

Air filter blocked sensor

Parking brake switch

Brake fluid level

Roof beacon

P.T.O. solenoid

Creeper gears switch

Slow or low setting

Fast or high setting

Ground speed

Differential lock solenoid

Rear axle oil tempera-ture switch

Hazard warning switch

Variable control

Transmission oil pressure switch

FWD engaged solenoid

Accessory socket

Implement socket

%age slip

Hitch raise solenoid

Hitch lower solenoid

Hitch height limit (rear)

Remote valve

SYMBOL	DRAWING LOCATION	DESCRIPTION
(A) PROCESSORS, MODULES AND PANELS		
A	1810-2890	ELECTRONIC INSTRUMENT CLUSTER
A001	370-720	TRANSMISSION AND EDC PROCESSOR
A002	3850	GEAR SHIFT DISPLAY MODULE
A003	4470	EDC PANEL
A004	6500	RADIO
(B) SENSORS, SENDERS AND POTENTIOMETERS		
B1	2670	ENGINE OIL PRESSURE SENSOR
B2	1990	ENGINE COOLANT TEMPERATURE SENSOR
B3	2110	FUEL TANK SENDER
B4	2640	RADAR
B5	1230	AXLE SPEED SENSOR
B5	3840	CLUTCH PEDAL POTENTIOMETER
B6	4460	HEIGHT LIMIT POTENTIOMETER
B7	4460	SLIP LIMIT POTENTIOMETER
B8	4460	DROP RATE POTENTIOMETER
B9	4460	DRAFT/POSITION POTENTIOMETER
B10	4680	ROCKER SHAFT POTENTIOMETER
B11	4710	QUADRANT LEVER POTENTIOMETER
B12	4620	DRAFT PIN LEFT
B13	4650	DRAFT PIN RIGHT
B14	6510	TEMPERATURE CONTROL POTENTIOMETER
B15	6530	SPEAKER
B16	6470	SPEAKER
B17	6230	HORN
(C) SPECIAL CONNECTORS		
C225	7130	SPLICE CONNECTOR
(E) MISCELLANEOUS		
E1	6390	AIR CONDITIONING COMPRESSOR CLUTCH
E2	6610	INTERIOR LIGHT
E3	6830	CONSOLE LIGHT
(F) FUSES		
F1	5130	HEAD LAMP MAIN 15A
F2	5180	HEAD LAMP DIP 15A
F3	5320	SIDE LAMP RH 15A
F4	5420	SIDE LAMP LH 15A
F5	5820	WORK LAMP FRONT LOW 10A
F6	5530	WORK LAMP REAR FENDER 15A
F7	5610	WORK LAMP FRONT AND REAR CAB ROOF 20A
F8	230	FUEL SHUT OFF SOLENOID 10A
F9	1910	GAUGES AND EXTERNAL SWITCHES 10A
F10	4760	HAZARD LIGHTS 15A

SYMBOL	DRAWING LOCATION	DESCRIPTION
F11	4850	HORN, FLASHERS, CIGAR LIGHTER, ROOF BEACON. 30A
F12	4020	EDC 10A
F13	1700	TRANSMISSION SOLENOIDS 15A
F14	1630	EDC 10A
F15	3210	STOP LAMPS, 4WD, DIFF. LOCK 15A
F16	6240	AIR CONDITIONING HEATER FAN 25A
F17	5960	WIPER WASHER, FRONT WIPER, REAR WIPER CONSOLE LAMP 20A
F18	4750	TURN INDICATORS 10A
F19	340	THERMOSTART 25A
F20	1650	PROCESSOR 'KEEP ALIVE MEMORY' (KAM) 5A
F21	3300	PTO 5A
F22	6390	RADIO, IMPLEMENT SOCKET SWITCH AND RELAY 5A
F23	6400	ACCESSORIES, INTERIOR LAMP, RADIO KAM, EIC BUZZER. 20A
F24	7160	INTERIOR LIGHT 10A
(H) LAMP AND LIGHTS		
H1	3580	PTO LAMP
H2	4450	EDC STATUS LAMP
H3	4480	SLIP LAMP
H4	4460	RAISE LAMP
H5	4460	LOWER LAMP
H6	4990	FRONT INDICATOR LAMP LH ISO
H7	5010	FRONT INDICATOR LAMP RH ISO
H8	4670	REAR INDICATOR LAMP LH ISO
H9	5030	REAR INDICATOR LAMP RH ISO
H10	5050	FRONT INDICATOR LAMP LH NASO
H11	5090	FRONT INDICATOR LAMP RH NASO
H12	5070	REAR INDICATOR LAMP LH NASO
H13	5100	REAR INDICATOR LAMP RH NASO
H14	5140	HEAD LAMP LH
H15	5170	HEAD LAMP RH
H16	5350	FRONT SIDE LAMP LH
H17	5380	FRONT SIDE LAMP RH
H18	5430	REAR BRAKE/TAIL LAMP LH
H19	5340	REAR BRAKE/TAIL LAMP RH
H20	5560	LICENCE PLATE LIGHT TOP RH
H21	5540	LICENCE PLATE LIGHT TOP LH
H22	5400	LICENCE PLATE LAMP LOWER
H23	5690	UPPER FRONT WORK LAMP LH
H24	5790	UPPER FRONT WORK LAMP RH
H25	5690	LOWER FRONT WORK LAMP LH
H26	5790	LOWER FRONT WORK LAMP RH
H27	5520	UPPER REAR WORK LAMP LH
H28	5580	UPPER REAR WORK LAMP RH
H29	5610	LOWER REAR WORK LAMP LH
H30	5630	LOWER REAR WORK LAMP RH

SYMBOL	DRAWING LOCATION	DESCRIPTION
(G) CHARGING		
G1	10	BATTERY
G2	100	ALTERNATOR
(K) RELAYS		
K	6670	IMPLEMENT SOCKET RELAY
K1	80	IGNITION RELAY
K2	170	STARTER RELAY
K3	4780	FLASHER UNIT RELAY
KXI	4940	FLASHER MODE RELAY
KXII		
KB	5820	FRONT WORK LAMP RELAY
KC	5530	REAR WORK LAMP RELAY
KD	5680	LOWER FRONT WORK LAMP RELAY
KE	5600	LOWER REAR WORK LAMP RELAY
KF	220	ENGINE SHUT DOWN RELAY
KV	3460	PTO RELAY
KII	6390	ACCESSORY SOCKET RELAY
KIV	6950	REMOTE VALVE RELAY
KVII	330	THERMOSTART RELAY
KVIII	6000	INTERMITTENT FRONT WIPER RELAY
KIX	6070	INTERMITTENT REAR WIPER RELAY
(M) MOTORS		
M1	50	STARTER MOTOR
M2	6030	FRONT WIPER MOTOR
M3	6100	REAR WIPER MOTOR
M4	5940	WASHER MOTOR
M5	6190	WASHER MOTOR
M6	6330	BLOWER MOTOR
M7	6920	AIR SEAT
(MF) MAXI FUZE		
MF1	20	TO IGNITION RELAY AND SUPPLY TO FUSE 9/14/15/16/17/18/21.
MF2	20	TO IGNITION SWITCH AND SUPPLYING FUSES 8/10/11/12/13/20/22. AND THERMOSTART MODULE FUSE 19
MF3	4860	TURN SWITCH AND SUPPLYING FUSES 1/2/3/4.
MF4	5530	WORK LAMPS FUSES 5/6/7.
MF5	6400	ACCESSORIES FUSES 23/24.
MF6	6720	40 AMP. IMPLEMENT SOCKET.
(P) CLOCKS		
P1	6860	CLOCK SPARE
P2	6890	CLOCK

SYMBOL	DRAWING LOCATION	DESCRIPTION
(R) RESISTORS		
R1	340	THERMOSTART COIL
R2	230	FUEL INJECTION PUMP WAX MOTOR
R3	6280	BLOWER SPEED RESISTOR
R4	6260	CIGAR LIGHTER
R5	6340	BLOWER SPEED RESISTOR
(S) SWITCHES		
S1	320	IGNITION SWITCH
S2	160	START INHIBITOR SWITCH
S3	1850	ENGINE OIL PRESSURE SWITCH
S4	2470	LOW CHARGE PRESSURE SWITCH (CCLS)
S5	2310	HYDRAULIC OIL TEMP. SWITCH
S6		
S7	2210	STEERING PRESSURE SWITCH
S8	2240	TRANSMISSION PRESSURE SWITCH
S9	2280	TRANSMISSION OIL TEMPERATURE SWITCH
S10	2370	HAND BRAKE SWITCH
S11	2340	BRAKE FLUID LEVEL SWITCH
S12	2050	AIR FILTER VACUUM SWITCH
S13	2940	FWD SWITCH
S14	3040	DIFFERENTIAL LOCK SWITCH
S15	3120	DIFFERENTIAL LOCK ENGAGEMENT LIGHT SWITCH
S16	3150	BRAKE SWITCH RIGHT HAND
S17	3190	BRAKE SWITCH LEFT HAND
S18	3340	PTO SWITCH
S19	3500	SEAT SWITCH
S20	3320	540/1000 PTO SPEED SWITCH
S21	3710	CLUTCH PEDAL SWITCH
S22	3670	CREEPER SWITCH
S23	3740	SHUTTLE DUMP SWITCH
S24	3750	UP SHIFT SWITCH
S25	3760	DOWN SHIFT SWITCH
S26	3770	HIGH RANGE SWITCH
S27	3780	LOW RANGE SWITCH
S28	3790	1-4 RANGE SWITCH
S29	3800	5-8 RANGE SWITCH
S30	4160	RAISE WORK SWITCH
S31	4260	FENDER SWITCH LEFT
S32	4300	FENDER SWITCH RIGHT
S33	4880	INDICATOR SWITCH
S34	4790	HAZARD SWITCH
S36	5810	FRONT UPPER LAMP SWITCH
S37	5670	FRONT LOWER LAMP SWITCH
S38	5520	REAR LAMP SWITCH
S39	5870	FRONT WIPER AND WASHER SWITCH

SYMBOL	DRAWING LOCATION	DESCRIPTION
S40	6160	REAR WIPER AND WASHER SWITCH
S41	6390	AIR CON HIGH LOW PRESSURE SWITCH
S42	6390	AIR CON LOW PRESSURE CUT OUT SWITCH
S43	6490	AIR CON TEMP. EXCHANGE CONTROL SWITCH
S44	6260	BLOWER SPEED SWITCH
S45	6600	INTERIOR LIGHT DOOR SWITCH
S46	6620	INTERIOR LIGHT DOOR SWITCH
S47	6670	40 AMP. TERMINAL AND EXTERNAL 40 AMP. 4 PIN POWER SWITCH
S48	6280	BEACON SWITCH
S49	6950	REMOTE VALVE SWITCH
S50	3670	TRANSMISSION OIL PRESSURE SWITCH
S51	3780	1st / 2nd SWITCH
S52	230	3rd / 4th SWITCH
(X) POWER SOCKETS		
XI	6650	40 AMP. SCREW TERMINAL
X3	6730	IMPLEMENT STATUS SOCKET
X4	6740	IMPLEMENT SOCKET
X5	6680	FOUR PIN 40 AMP. SOCKET
X6	6290	ROOF BEACON SOCKET LH
X7	6330	ROOF BEACON SOCKET RH
(Y) SOLENOID VALVES		
Y1	210	FUEL SHUT OFF SOLENOID
Y2	250	ELECTRIC FUEL PUMP
Y3	2980	FWD SOLENOID
Y4	3080	DIFFERENTIAL LOCK SOLENOID
Y5	3540	PTO SOLENOID
Y6	3990	CREEPER SOLENOID
Y7	3910	PWM VALVE 1
Y8	3930	PWM VALVE 2
Y9	3950	PWM VALVE 3
Y10	3970	PWM VALVE 4
Y11	4190	RAISE SOLENOID EDC VALVE
Y12	4210	LOWER SOLENOID EDC VALVE
Y13	6960	REMOTE VALVE SOLENOID
Y14	3930	DUMP SOLENOID
Y15	3950	LO - PWM
Y16	3970	HI - PWM

STARTING, CHARGING, THERMOSTART, FUEL INJECTION PUMP

line 10-360

(1)

WITH CAB ELECTROSHIFT WITH EDC
WITH CAB DUAL COMMAND WITH EDC
WITH CAB DUAL COMMAND LESS EDC

STARTING

G1 Battery
K1 Ignition Relay
K2 Start Relay
M1 Starter Motor and Solenoid
S1 Ignition Switch
S2 Start Inhibitor Switch

CHARGING

G2 Alternator

THERMOSTART AND FUEL SYSTEM

F8 Shut off Solenoid Fuse
F19 Fuse
KVII Thermostart relay
R1 Thermostart coil
R2 Fuel Injection Pump (FIP) Wax Motor
Y1 Shut Off Solenoid
Y2 Electric Lift Pump

ENGINE SHUTDOWN

KF Engine Shutdown Relay

WIRE COLOUR CODES							
B	Black	R	Red	LG	Light Green	K	Pink
N	Brown	O	Orange	U	Blue	W	White
LN	Light Brown	Y	Yellow	TQ	Turquoise		
S	Slate	G	Green	P	Purple		

Line 10-360

From Serial Number 086641B
TS 90, 100, 110. With cab Electroshift with EDC
With cab Dual Command with EDC
With cab Dual Command Less EDC

STARTING, CHARGING, THERMOSTART, FUEL INJECTION PUMP
line 10–360

(1)

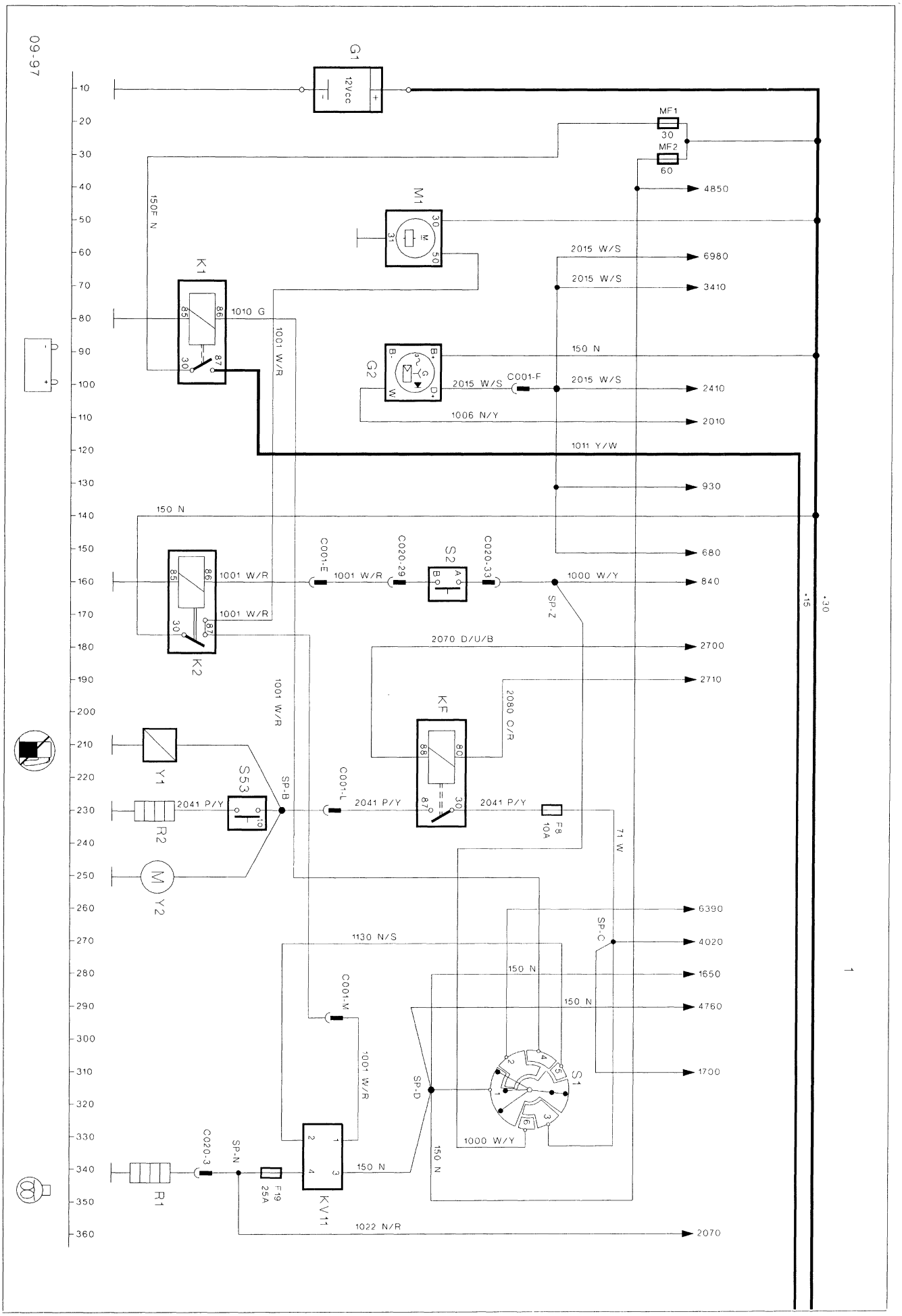
09-97
G1
12Vcc
MF1
30
MF2
60
4850
M1
150F N
2015 W/S
6980
K1
1010 G
1001 W/R
2015 W/S
3410
150 N
G2
2015 W/S
C001-F
2015 W/S
2410
1006 N/Y
2010
1011 Y/W
930
150 N
680
C001-E
C020-29
S2
C020-33
1001 W/R
1001 W/R
1000 W/Y
840
SP-Z
1001 W/R
K2
2070 D/U/B
2700
2710
KF
2080 O/R
1001 W/R
Y1
S53
SP-B
C001-L
2041 P/Y
2041 P/Y
2041 P/Y
F8
10A
71 W
R2
Y2
6390
SP-C
1130 N/S
4020
150 N
1650
C001-M
150 N
4760
1001 W/R
SP-D
S1
1700
1000 W/Y
150 N
C020-3
SP-N
F19
25A
150 N
KV11
R1
1022 N/R
2070
+30
+15
1

NOTES PAGE

TRANSMISSION, EDC PROCESSOR

line 370–1800

(2–5B)

WITH CAB ELECTROSHIFT WITH EDC

Transmission Processor
A001 Processor
C125 Diagnostic plug

PIN	Description	PIN	Description
1	Radar	8	12V power from fuse 9
2	Wheel speed	9	GROUND
3	Implement status	10	Serial IN
4	Data out	11	Serial OUT
5	Data in	12	Program in
6	Engine RPM	13	Not used
7	Service		

C128 (Black processor connector)

PIN	Description	PIN	Description
1	High Range Switch Input	14	Serial input from diagnostic plug
2	Low Range Switch Input	15	Radar input
3	1- 4 Gear Switch Input	16	Maximum slip potentiometer input
4	5- 8 Gear Switch Input	17	Not used
5	Shift Up Input	18	Transmission oil temp. output
6	Power Fuse 12	19	Clutch pedal potentiometer input
7	Left Hand Brake Switch Input	20	Right hand brake switch input
8	Rocker Shaft potentiometer input	21	Fender switch left hand RH raise position input
9	Lift arms drop rate potentiometer input	22	Service input and output diagnostic plug
10	Draft Position mix control potentiometer input	23	Shuttle dump switch input
11	Right hand draft pin input	24	Power shift down input
12	Programme enable	25	Differential lock switch on manual input
13	Serial output to diagnostic plug		

WIRE COLOUR CODES							
B	Black	R	Red	LG	Light Green	K	Pink
N	Brown	O	Orange	U	Blue	W	White
LN	Light Brown	Y	Yellow	TQ	Turquoise		
S	Slate	G	Green	P	Purple		

Line 370–720

From Serial Number 086641B
TS 90, 100, 110. With cab Electroshift with EDC

TRANSMISSION PROCESSOR
line 370–720

(2)

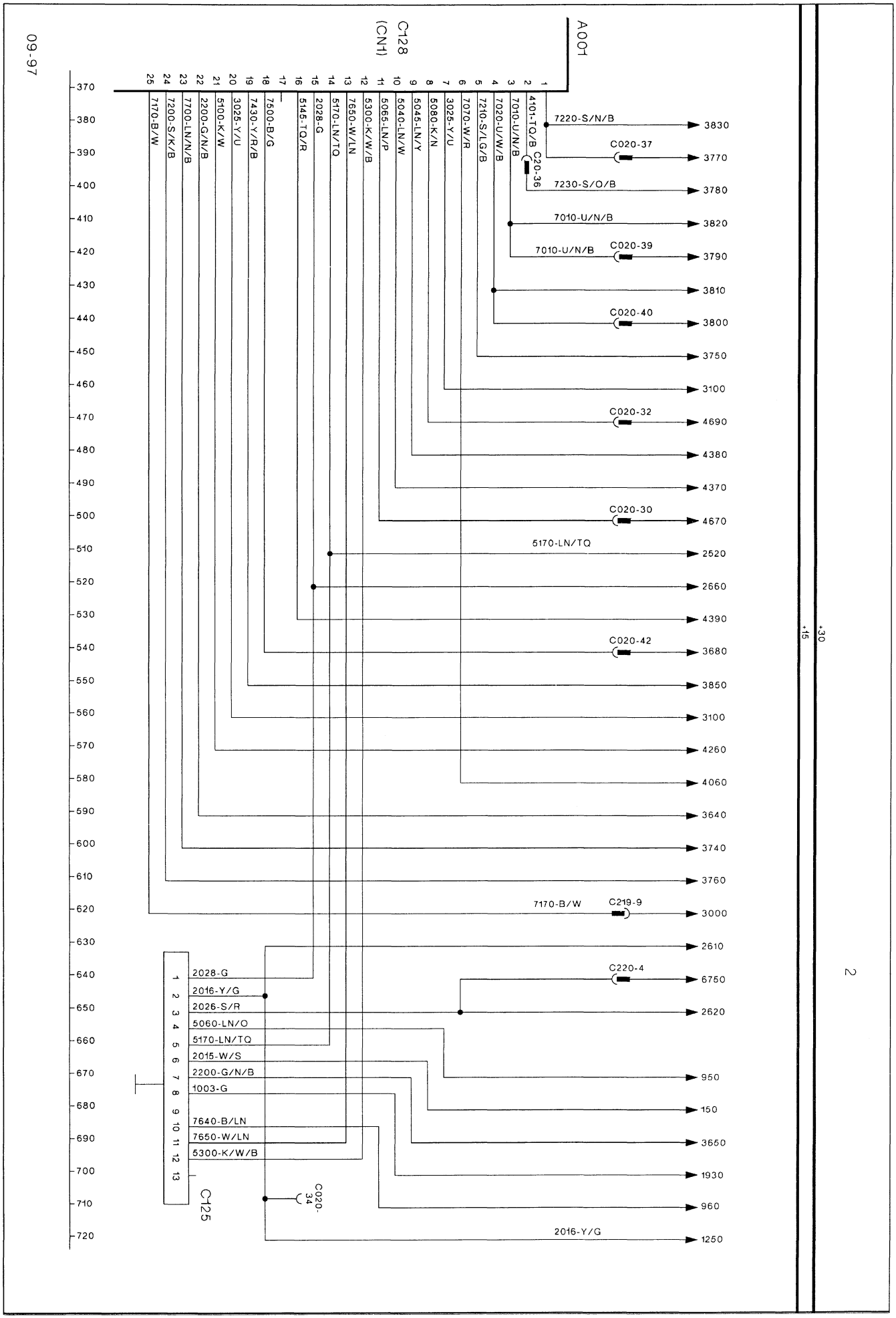
09-97
A001
C128
(CN1)
1 2 3 4 5 6 7 8 9 10 11 12 13 14 15 16 17 18 19 20 21 22 23 24 25
370 380 390 400 410 420 430 440 450 460 470 480 490 500 510 520 530 540 550 560 570 580 590 600 610 620 630 640 650 660 670 680 690 700 710 720
7170-B/W
7200-S/K/B
7700-LN/N/B
2200-G/N/B
5100-K/W
3025-Y/U
7430-Y/R/B
7500-B/G
5145-TQ/R
2028-G
5170-LN/TQ
7650-W/LN
5300-K/W/B
5065-LN/P
5040-LN/W
5045-LN/Y
5080-K/N
3025-Y/U
7070-W/R
7210-S/LG/B
7020-U/W/B
7010-U/N/B
4101-TQ/B
C20-36
7220-S/N/B
3830
C020-37
3770
7230-S/O/B
3780
7010-U/N/B
3820
7010-U/N/B
C020-39
3790
3810
C020-40
3800
3750
3100
C020-32
4690
4380
4370
C020-30
4670
5170-LN/TQ
2520
2660
4390
C020-42
3680
3850
3100
4260
4060
3640
3740
3760
7170-B/W
C219-9
3000
2610
C220-4
6750
2620
950
150
3650
1930
960
1250
2016-Y/G
C125
1 2 3 4 5 6 7 8 9 10 11 12 13
2028-G
2016-Y/G
2026-S/R
5060-LN/O
5170-LN/TQ
2015-W/S
2200-G/N/B
1003-G
7640-B/LN
7650-W/LN
5300-K/W/B
C020-34
+30
+15
2

WITH CAB DUAL COMMAND WITH EDC

Transmission Processor

A001 Processor
C125 Diagnostic plug

PIN	Description	PIN	Description
1	Radar	8	12V power from fuse 9
2	Wheel speed	9	GROUND
3	Implement status	10	Serial IN
4	Data out	11	Serial OUT
5	Data in	12	Program in
6	Engine RPM	13	Not used
7	Service		

C128 (Black processor connector)

PIN	Description	PIN	Description
1	not used	14	Serial input from diagnostic plug
2	1- 2/3- 4 switch	15	Radar input
3	Hi/Med/Neutral switch	16	Maximum slip potentiometer input
4	not used	17	2nd clutch pedal sensor (where fitted)
5	Shift Up Input	18	Transmission oil temp. output
6	Power Fuse 12	19	Clutch pedal potentiometer input
7	Left Hand Brake Switch Input	20	Right hand brake switch input
8	Rocker Shaft potentiometer input	21	Fender switch left hand RH raise position input
9	Lift arms drop rate potentiometer input	22	Service input and output diagnostic plug
10	Draft Position mix control potentiometer input	23	Shuttle dump switch input
11	Right hand draft pin input	24	Power shift down input
12	Programme enable	25	Differential lock switch on manual input
13	Serial output to diagnostic plug		

WIRE COLOUR CODES							
B	Black	R	Red	LG	Light Green	K	Pink
N	Brown	O	Orange	U	Blue	W	White
LN	Light Brown	Y	Yellow	TQ	Turquoise		
S	Slate	G	Green	P	Purple		

Line 370–720

From Serial Number 086641B
TS 90, 100, 110. With cab Dual Command with EDC

TRANSMISSION PROCESSOR
line 370–720

(2A)

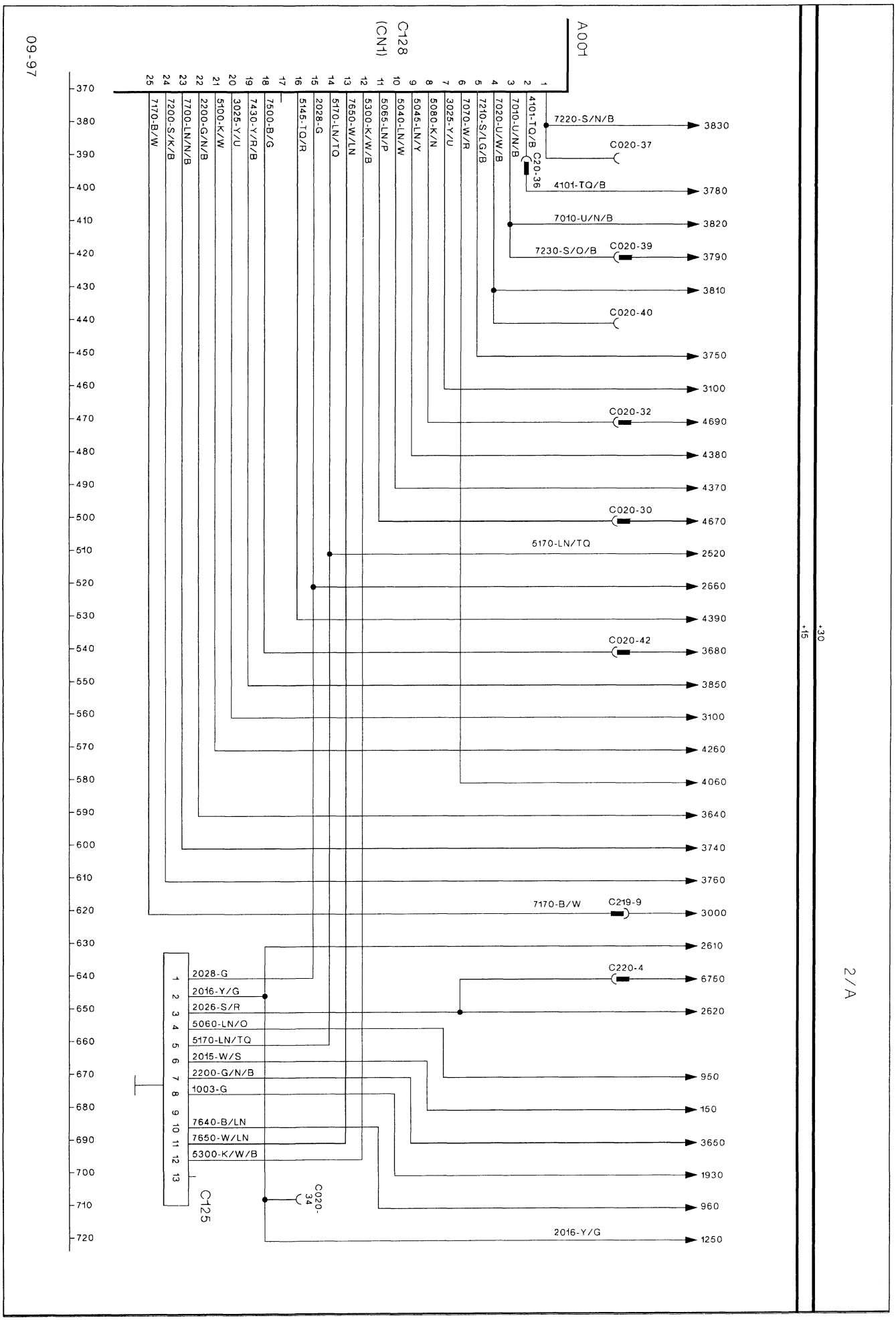
09-97
A001
C128
(CN1)
1 4101-TQ/B
2 7010-U/N/B
3 7020-U/W/B
4 7210-S/LG/B
5 7070-W/R
6 3025-Y/U
7 5080-K/N
8 5045-LN/Y
9 5040-LN/W
10 5065-LN/P
11 5300-K/W/B
12 7650-W/LN
13 5170-LN/TQ
14 2028-G
15 5145-TQ/R
16 7500-B/G
17
18 7430-Y/R/B
19 3025-Y/U
20 5100-K/W
21 2200-G/N/B
22 7700-LN/N/B
23 7200-S/K/B
24 7170-B/W
25
7220-S/N/B
3830
C020-37
C220-36
4101-TQ/B
3780
7010-U/N/B
3820
7230-S/O/B
C020-39
3790
3810
C020-40
3750
3100
C020-32
4690
4380
4370
C020-30
4670
5170-LN/TQ
2520
2660
4390
C020-42
3680
3850
3100
4260
4060
3640
3740
3760
7170-B/W
C219-9
3000
2610
C220-4
6760
2620
950
150
3650
1930
960
2016-Y/G
1250
C125
1 2028-G
2 2016-Y/G
3 2026-S/R
4 5060-LN/O
5 5170-LN/TQ
6 2015-W/S
7 2200-G/N/B
8 1003-G
9
10 7640-B/LN
11 7650-W/LN
12 5300-K/W/B
13
C020-34
370
380
390
400
410
420
430
440
450
460
470
480
490
500
510
520
530
540
550
560
570
580
590
600
610
620
630
640
650
660
670
680
690
700
710
720
+30
+15
2/A

WITH CAB DUAL COMMAND LESS EDC

Transmission Processor

A001 Processor
C125 Diagnostic plug

PIN	Description	PIN	Description
1	Radar	8	12V power from fuse 9
2	Wheel speed	9	GROUND
3	Implement status	10	Serial IN
4	Data out	11	Serial OUT
5	Data in	12	Program in
6	Engine RPM	13	Not used
7	Service		

C128 (Black processor connector)

PIN	Description	PIN	Description
1	not used	14	Serial input from diagnostic plug
2	1- 2/3- 4 switch	15	Radar input
3	Hi/Med/Neutral switch	16	Maximum slip potentiometer input
4	not used	17	not used
5	Shift Up Input	18	Transmission oil temp. output
6	Power Fuse 12	19	Clutch pedal potentiometer input
7	Left Hand Brake Switch Input	20	Right hand brake switch input
8	Rocker Shaft potentiometer input (not used)	21	Fender switch left hand RH raise position input (not used)
9	Lift arms drop rate potentiometer input	22	Service input and output diagnostic plug
10	Draft Position mix control potentiometer input	23	Shuttle dump switch input
11	Right hand draft pin input (not used)	24	Power shift down input
12	Programme enable	25	Differential lock switch on manual input
13	Serial output to diagnostic plug		

WIRE COLOUR CODES							
B	Black	R	Red	LG	Light Green	K	Pink
N	Brown	O	Orange	U	Blue	W	White
LN	Light Brown	Y	Yellow	TQ	Turquoise		
S	Slate	G	Green	P	Purple		

Line 370–720

From Serial Number 086641B
TS 90, 100, 110. With cab Dual Command Less EDC

TRANSMISSION PROCESSOR
line 370–720

(2B)

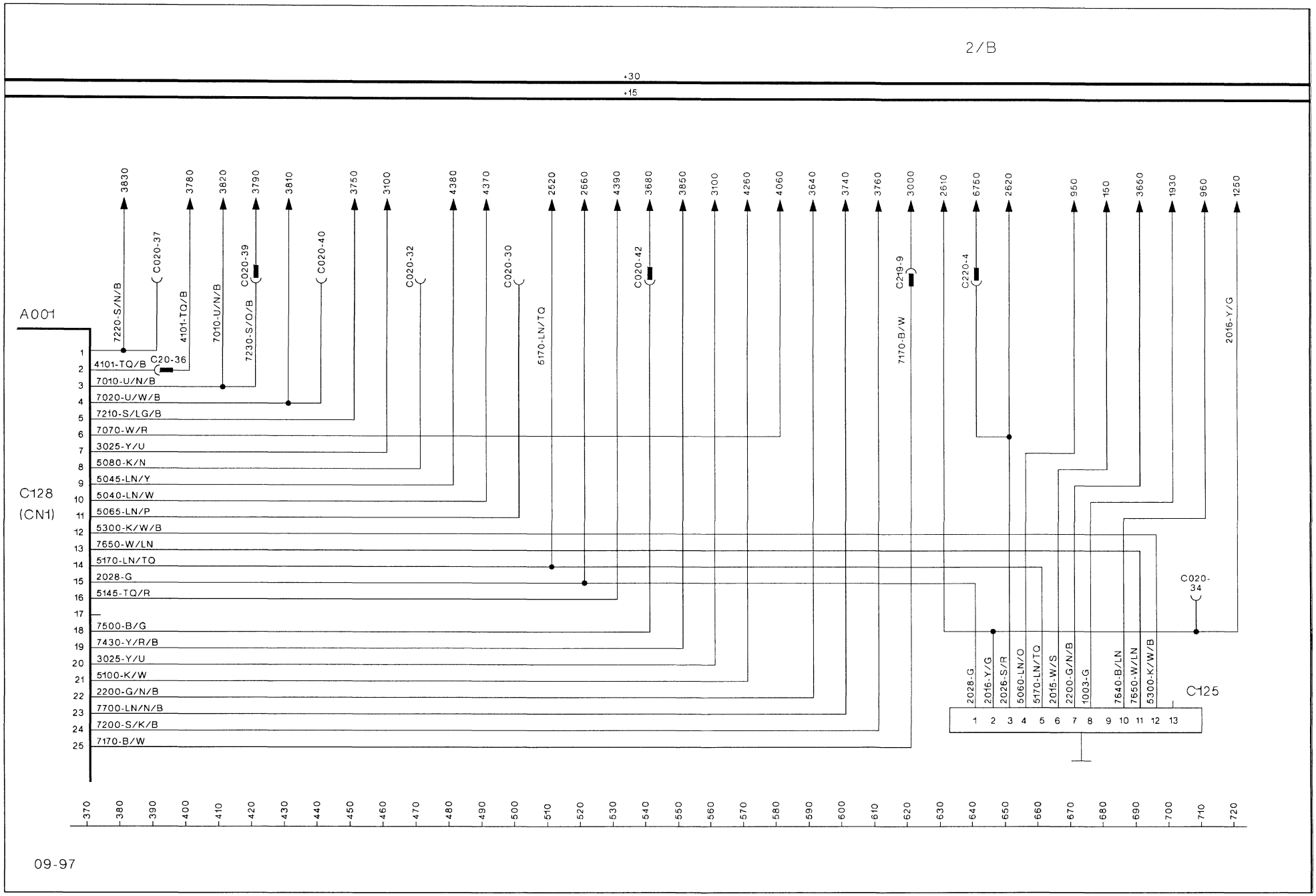
2/B
+30
+15
A001
C128
(CN1)
C125
C020-37
C20-36
C020-39
C020-40
C020-32
C020-30
C020-42
C219-9
C220-4
C020-34
7220-S/N/B
4101-TQ/B
7010-U/N/B
7230-S/O/B
5170-LN/TQ
7170-B/W
2016-Y/G
4101-TQ/B
7010-U/N/B
7020-U/W/B
7210-S/LG/B
7070-W/R
3025-Y/U
5080-K/N
5045-LN/Y
5040-LN/W
5065-LN/P
5300-K/W/B
7650-W/LN
5170-LN/TQ
2028-G
5145-TQ/R
7500-B/G
7430-Y/R/B
3025-Y/U
5100-K/W
2200-G/N/B
7700-LN/N/B
7200-S/K/B
7170-B/W
2028-G
2016-Y/G
2026-S/R
5060-LN/O
5170-LN/TQ
2015-W/S
2200-G/N/B
1003-G
7640-B/LN
7650-W/LN
5300-K/W/B
09-97

WITH CAB ELECTROSHIFT WITH EDC
WITH CAB DUAL COMMAND WITH EDC

Transmission & EDC Processor continued

A001 Processor

C128 (Black processor connector)

PIN	Description
26	Raise/work/float switch, raise position input
27	Transmission neutral input
28	Fender hydraulic control switch RH/LH lower input
29	Raise/work/float switch work position input
30	Hydraulic lift and low potentiometer input
31	Hydraulic arms height limit potentiometer input
32	Hydraulic oil temperature switch input
33	Left hand draft pin input
34	Engine RPM input
35	Serial diagnostic output
36	Serial diagnostic input

WIRE COLOUR CODES							
B	Black	R	Red	LG	Light Green	K	Pink
N	Brown	O	Orange	U	Blue	W	White
LN	Light Brown	Y	Yellow	TQ	Turquoise		
S	Slate	G	Green	P	Purple		

Line 730–1080

From Serial Number 086641B
TS 90, 100, 110. With cab Electroshift with EDC
With cab Dual command with EDC

TRANSMISSION & EDC PROCESSOR (continued)
line 730–1080

(3)

730
740
750
760
770
780
790
800
810
820
830
840
850
860
870
880
890
900
910
920
930
940
950
960
970
980
990
1000
1010
1020
1030
1040
1050
1060
1070
1080

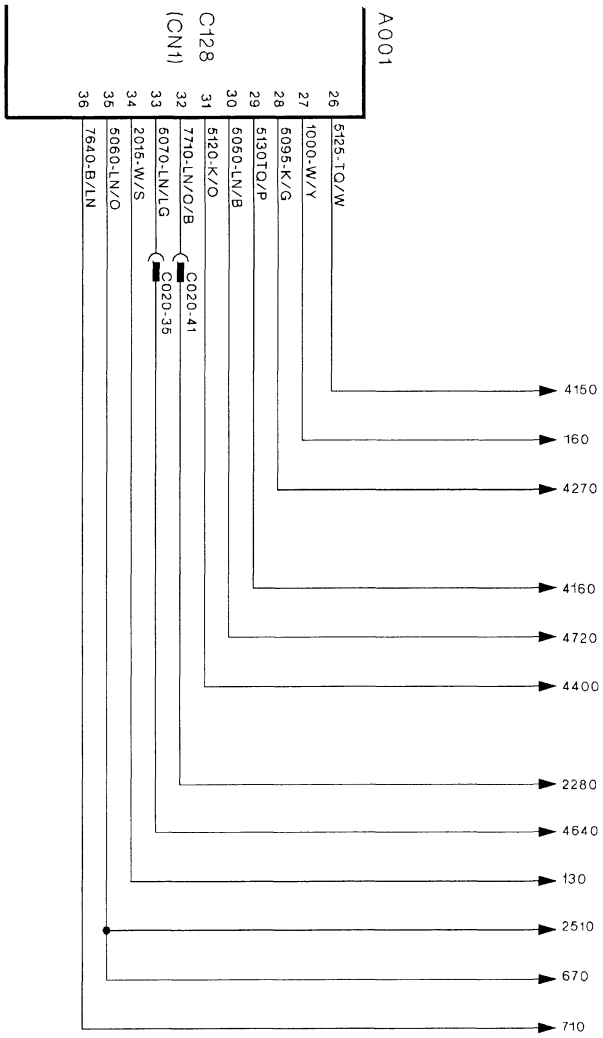

WITH CAB DUAL COMMAND LESS EDC

Transmission & EDC Processor continued

A001 Processor

C128 (Black processor connector)

PIN	Description
26	Raise/work/float switch, raise position input (not used)
27	Transmission neutral input
28	Fender hydraulic control switch RH/LH lower input (not used)
29	Raise/work/float switch work position input (not used)
30	Hydraulic lift and low potentiometer input (not used)
31	Hydraulic arms height limit potentiometer input (not used)
32	Hydraulic oil temperature switch input
33	Left hand draft pin input (not used)
34	Engine RPM input
35	Serial diagnostic output
36	Serial diagnostic input

WIRE COLOUR CODES							
B	Black	R	Red	LG	Light Green	K	Pink
N	Brown	O	Orange	U	Blue	W	White
LN	Light Brown	Y	Yellow	TQ	Turquoise		
S	Slate	G	Green	P	Purple		

Line 730–1080

From Serial Number 086641B
TS 90, 100, 110. With cab Dual Command Less EDC

TRANSMISSION & EDC PROCESSOR (continued)
line 730–1080

(3B)

+30

+15

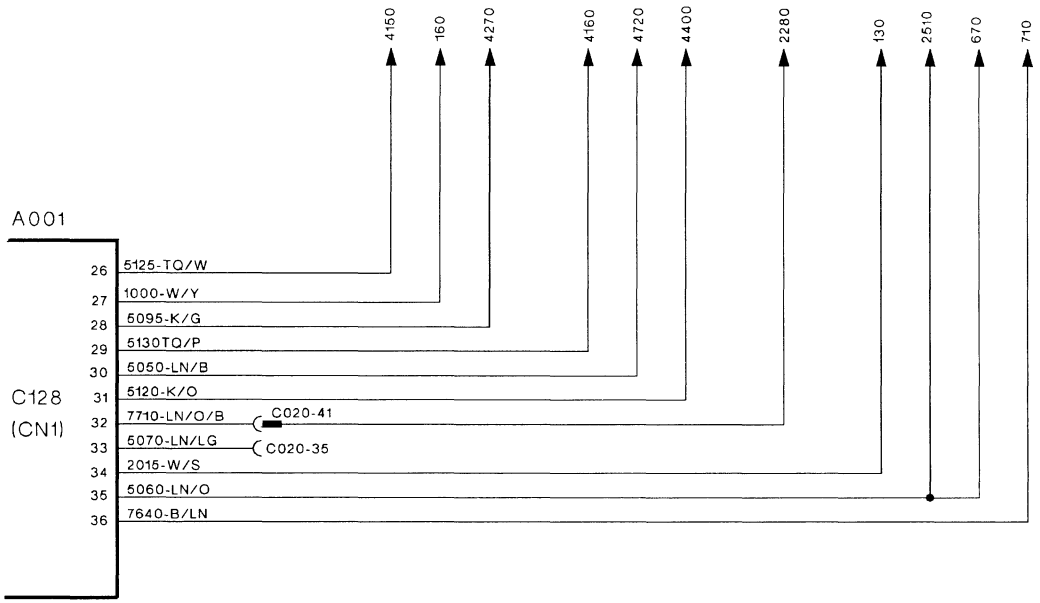

730 740 750 760 770 780 790 800 810 820 830 840 850 860 870 880 890 900 910 920 930 940 950 960 970 980 990 1000 1010 1020 1030 1040 1050 1060 1070 1080

WITH CAB ELECTROSHIFT WITH EDC

Transmission & EDC Processor continued

A001 Processor

C127 (Red processor connector)

PIN	Description
1	Sensor Ground Output
2	Diff lock switch on auto input
3	Creeper switch input
4	Not used
5	+5V output to EDC rate and potentiometer
6	Wheel speed input
7	Not used
8	Wheel speed output
9	Case ground output
10	Power to 4WD switch output
11	C1 solenoid valve output
12	C4 return input
13	C2 solenoid valve return input
14	C2 solenoid valve output
15	Creeper solenoid 12V output
16	Differential lock solenoid valve output
17	C4 PWM valve output
18	L3 PWM valve output
19	EDC valve PWM lower output
20	EDC valve PWM raise output
21	Gear display module output - 1
22	Gear display module output - 2

B5 Axle speed sensor

WIRE COLOUR CODES							
B	Black	R	Red	LG	Light Green	K	Pink
N	Brown	O	Orange	U	Blue	W	White
LN	Light Brown	Y	Yellow	TQ	Turquoise		
S	Slate	G	Green	P	Purple		

Line 1090–1440

From Serial Number 086641B
TS 90, 100, 110. With cab Electroshift with EDC

TRANSMISSION & EDC PROCESSOR (continued)
line 1090–1440

(4)

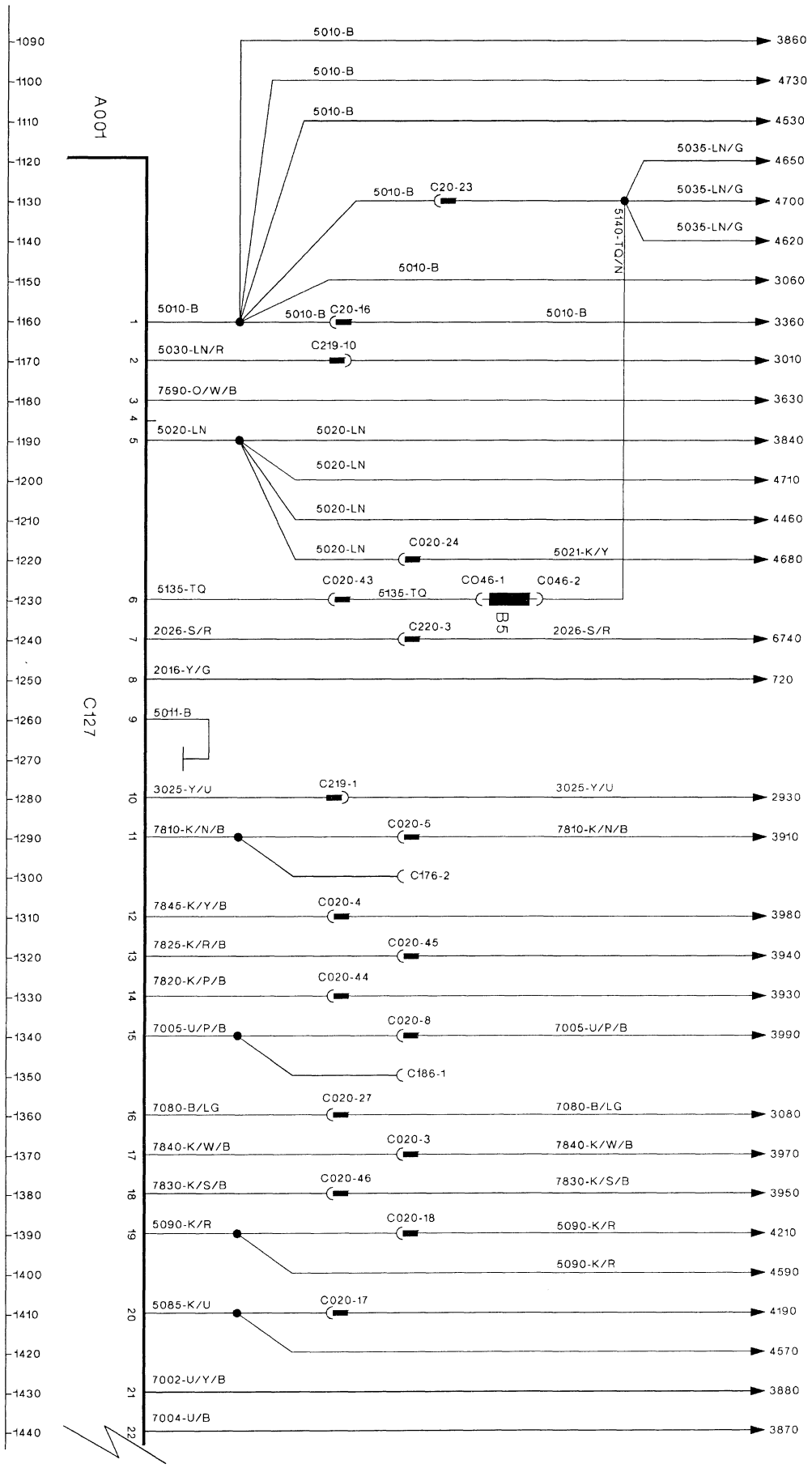
A001
C127
1090
1100
1110
1120
1130
1140
1150
1160
1170
1180
1190
1200
1210
1220
1230
1240
1250
1260
1270
1280
1290
1300
1310
1320
1330
1340
1350
1360
1370
1380
1390
1400
1410
1420
1430
1440
1 5010-B
2 5030-LN/R
3 7590-O/W/B
4
5 5020-LN
6 5135-TQ
7 2026-S/R
8 2016-Y/G
9 5011-B
10 3025-Y/U
11 7810-K/N/B
12 7845-K/Y/B
13 7825-K/R/B
14 7820-K/P/B
15 7005-U/P/B
16 7080-B/LG
17 7840-K/W/B
18 7830-K/S/B
19 5090-K/R
20 5085-K/U
21 7002-U/Y/B
22 7004-U/B
5010-B 3860
5010-B 4730
5010-B 4530
5035-LN/G 4650
5010-B C20-23 5035-LN/G 4700
5035-LN/G 4620
5140-TQ/N
5010-B 3060
5010-B C20-16 5010-B 3360
C219-10 3010
7590-O/W/B 3630
5020-LN 5020-LN 3840
5020-LN 4710
5020-LN 4460
5020-LN C020-24 5021-K/Y 4680
C020-43 5135-TQ CO46-1 C046-2
B5
C220-3 2026-S/R 6740
2016-Y/G 720
C219-1 3025-Y/U 2930
C020-5 7810-K/N/B 3910
C176-2
C020-4 3980
C020-45 3940
C020-44 3930
C020-8 7005-U/P/B 3990
C186-1
C020-27 7080-B/LG 3080
C020-3 7840-K/W/B 3970
C020-46 7830-K/S/B 3950
C020-18 5090-K/R 4210
5090-K/R 4590
C020-17 5085-K/U 4190
4570
7002-U/Y/B 3880
7004-U/B 3870

+30
+15

WITH CAB DUAL COMMAND WITH EDC

Transmission & EDC Processor continued

A001 Processor

C127 (Red processor connector)

PIN	Description
1	Sensor Ground Output
2	Diff lock switch on auto input
3	not used
4	Not used
5	+5V output to EDC rate and potentiometer
6	Wheel speed input
7	Implement status
8	Wheel speed output
9	Case ground output
10	Power to 4WD switch output
11	not used
12	High PWM input
13	Dump solenoid input
14	Dual Command Hi
15	Creeper solenoid 12V output
16	Differential lock solenoid valve output
17	High PWM output
18	Low PWM output
19	EDC valve PWM lower output
20	EDC valve PWM raise output
21	not used
22	not used

B5 Axle speed sensor

WIRE COLOUR CODES							
B	Black	R	Red	LG	Light Green	K	Pink
N	Brown	O	Orange	U	Blue	W	White
LN	Light Brown	Y	Yellow	TQ	Turquoise		
S	Slate	G	Green	P	Purple		

Line 1090–1440

From Serial Number 086641B
TS 90, 100, 110. With cab Dual Command with EDC

TRANSMISSION & EDC PROCESSOR (continued)
line 1090–1440

(4A)

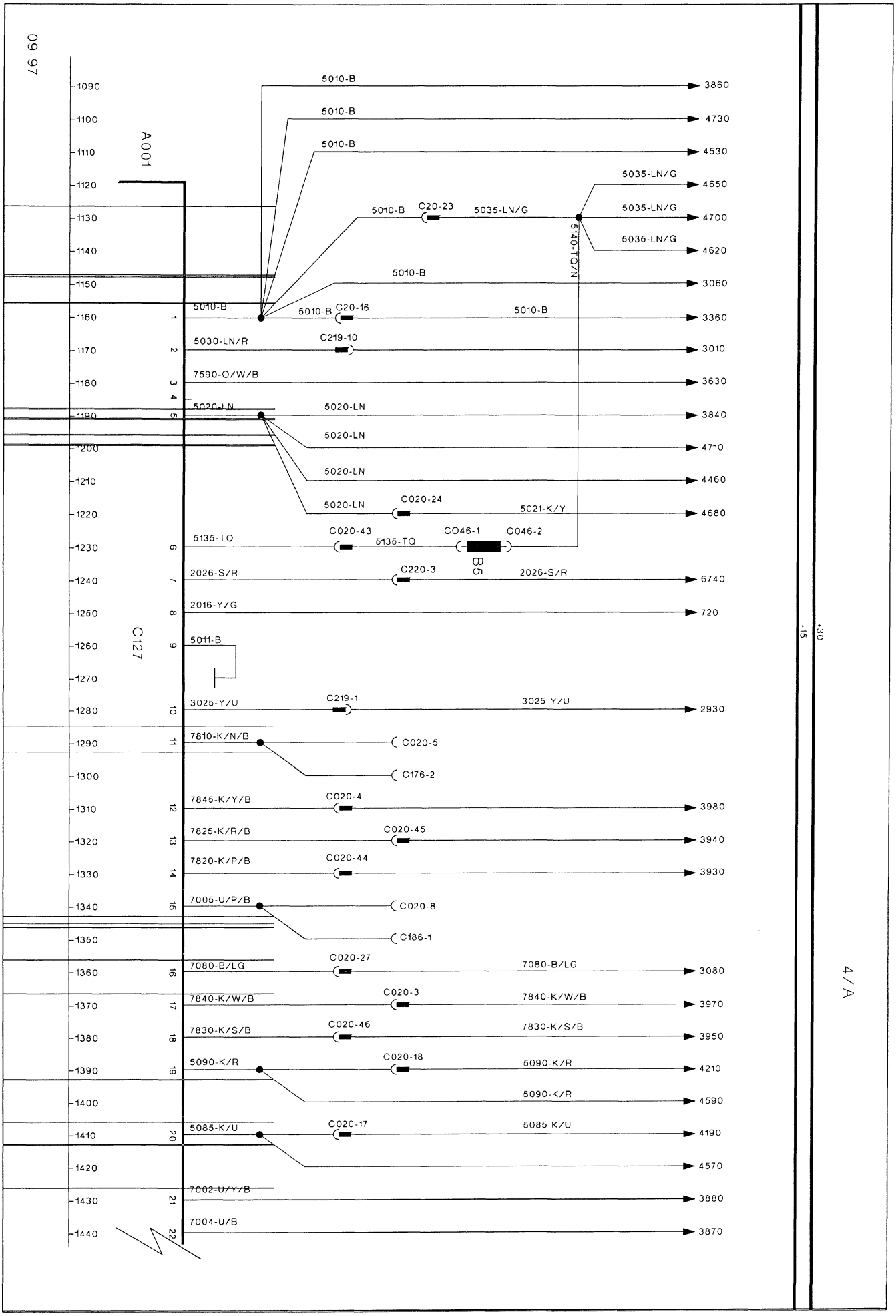
09-97
A001
C127
1090
1100
1110
1120
1130
1140
1150
1160
1170
1180
1190
1200
1210
1220
1230
1240
1250
1260
1270
1280
1290
1300
1310
1320
1330
1340
1350
1360
1370
1380
1390
1400
1410
1420
1430
1440
1 2 3 4 5 6 7 8 9 10 11 12 13 14 15 16 17 18 19 20 21 22
5010-B
3860
5010-B
4730
5010-B
4530
5035-LN/G
4650
5010-B
C20-23
5035-LN/G
5035-LN/G
4700
5035-LN/G
4620
5140-TQ/N
5010-B
3060
5010-B
5010-B
C20-16
5010-B
3360
5030-LN/R
C219-10
3010
7590-O/W/B
3630
5020-LN
5020-LN
3840
5020-LN
4710
5020-LN
4460
5020-LN
C020-24
5021-K/Y
4680
5135-TQ
C020-43
5135-TQ
CO46-1
C046-2
B5
2026-S/R
C220-3
2026-S/R
6740
2016-Y/G
720
5011-B
3025-Y/U
C219-1
3025-Y/U
2930
7810-K/N/B
C020-5
C176-2
7845-K/Y/B
C020-4
3980
7825-K/R/B
C020-45
3940
7820-K/P/B
C020-44
3930
7005-U/P/B
C020-8
C186-1
7080-B/LG
C020-27
7080-B/LG
3080
7840-K/W/B
C020-3
7840-K/W/B
3970
7830-K/S/B
C020-46
7830-K/S/B
3950
5090-K/R
C020-18
5090-K/R
4210
5090-K/R
4590
5085-K/U
C020-17
5085-K/U
4190
4570
7002-U/Y/B
3880
7004-U/B
3870
+15
+30
4/A

WITH CAB DUAL COMMAND LESS EDC

Transmission & EDC Processor continued

A001 Processor

C127 (Red processor connector)

PIN	Description
1	Sensor Ground Output
2	Diff lock switch on auto input
3	not used
4	Not used
5	+5V output to EDC rate and potentiometer (not used)
6	Wheel speed input
7	Not used
8	Wheel speed output
9	Case ground output
10	Power to 4WD switch output
11	not used
12	High PWM input
13	Dump solenoid input
14	Dual Command Hi
15	not used
16	Differential lock solenoid valve output
17	High PWM output
18	Low PWM output
19	EDC valve PWM lower output (not used)
20	EDC valve PWM raise output (not used)
21	not used
22	not used

B5 Axle speed sensor

WIRE COLOUR CODES							
B	Black	R	Red	LG	Light Green	K	Pink
N	Brown	O	Orange	U	Blue	W	White
LN	Light Brown	Y	Yellow	TQ	Turquoise		
S	Slate	G	Green	P	Purple		

Line 1090–1440

From Serial Number 086641B
TS 90, 100, 110. With cab Dual Command Less EDC

TRANSMISSION & EDC PROCESSOR (continued)
line 1090–1440

(4B)

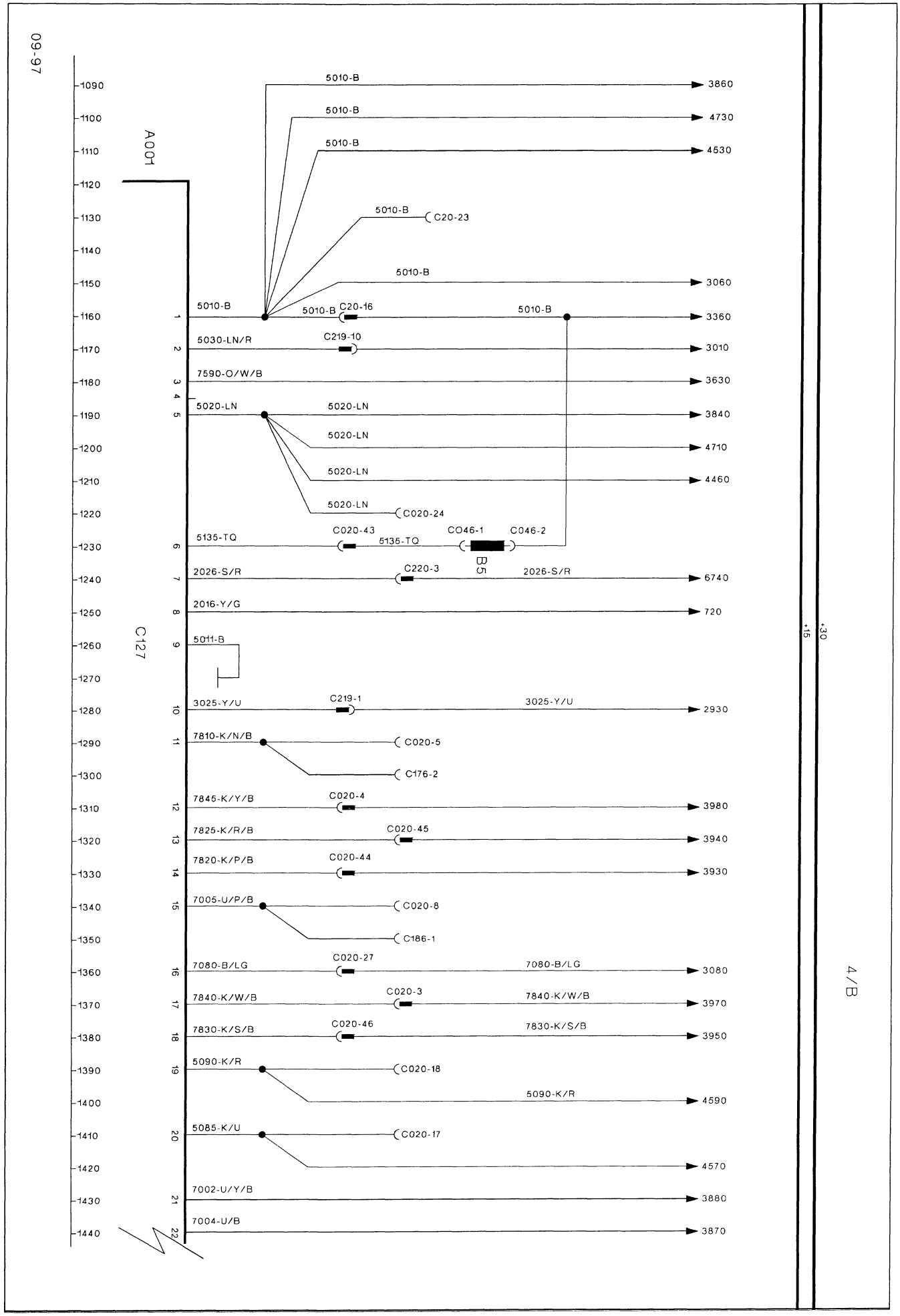
09-97
A001
C127
1090
1100
1110
1120
1130
1140
1150
1160
1170
1180
1190
1200
1210
1220
1230
1240
1250
1260
1270
1280
1290
1300
1310
1320
1330
1340
1350
1360
1370
1380
1390
1400
1410
1420
1430
1440
1
2
3
4
5
6
7
8
9
10
11
12
13
14
15
16
17
18
19
20
21
22
5010-B
3860
5010-B
4730
5010-B
4530
5010-B
C20-23
5010-B
3060
5010-B
5010-B
C20-16
5010-B
3360
5030-LN/R
C219-10
3010
7590-O/W/B
3630
5020-LN
5020-LN
3840
5020-LN
4710
5020-LN
4460
5020-LN
C020-24
5135-TQ
C020-43
5135-TQ
CO46-1
C046-2
B5
2026-S/R
C220-3
2026-S/R
6740
2016-Y/G
720
5011-B
3025-Y/U
C219-1
3025-Y/U
2930
7810-K/N/B
C020-5
C176-2
7845-K/Y/B
C020-4
3980
7825-K/R/B
C020-45
3940
7820-K/P/B
C020-44
3930
7005-U/P/B
C020-8
C186-1
7080-B/LG
C020-27
7080-B/LG
3080
7840-K/W/B
C020-3
7840-K/W/B
3970
7830-K/S/B
C020-46
7830-K/S/B
3950
5090-K/R
C020-18
5090-K/R
4590
5085-K/U
C020-17
4570
7002-U/Y/B
3880
7004-U/B
3870
+30
+15
4/B

WITH CAB ELECTROSHIFT WITH EDC

Transmission & EDC Processor continued

A001 Processor

C127 (Red processor connector)

PIN	Description
23	EDC Slip Lamp output
24	EDC status lamp output
25	+8.5V output to draft pins
26	C3 solenoid input
27	EDC valve power solenoid return input
28	EDC valve raise solenoid return input
29	12V power input fuse 14
30	Clutch pedal switch input
31	12V power input fuse 20
32	GND output
33	GND output
34	Power input fuse 13
35	Power input fuse 13
36	C1 solenoid return input

WIRE COLOUR CODES							
B	Black	R	Red	LG	Light Green	K	Pink
N	Brown	O	Orange	U	Blue	W	White
LN	Light Brown	Y	Yellow	TQ	Turquoise		
S	Slate	G	Green	P	Purple		

Line 1450–1800

From Serial Number 086641B
TS 90, 100, 110. With cab Electroshift with EDC

TRANSMISSION & EDC PROCESSOR (continued)
line 1450–1800

(5)

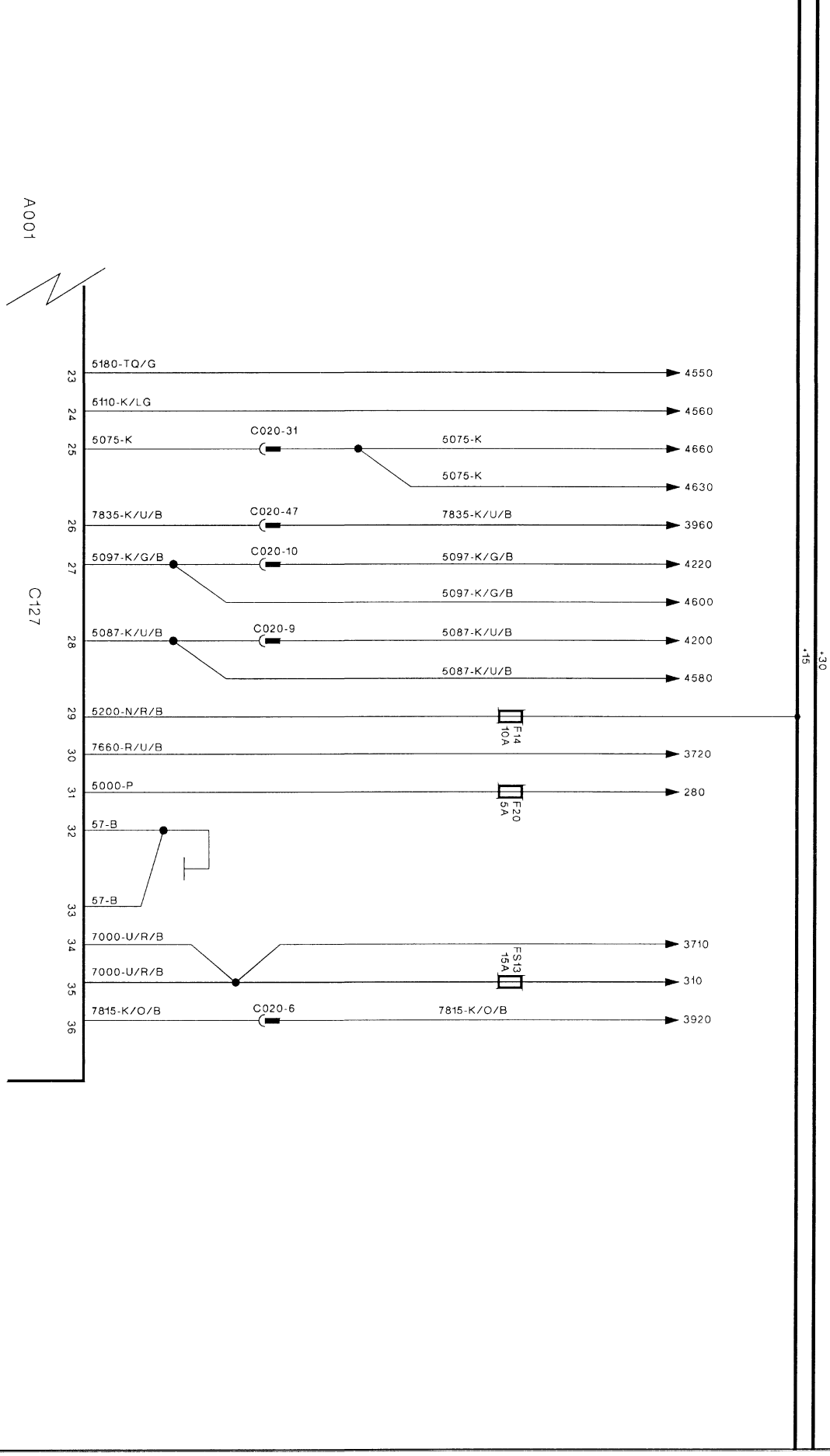
1450
1460
1470
1480
1490
1500
1510
1520
1530
1540
1550
1560
1570
1580
1590
1600
1610
1620
1630
1640
1650
1660
1670
1680
1690
1700
1710
1720
1730
1740
1750
1760
1770
1780
1790
1800
A001
C127
23
24
25
26
27
28
29
30
31
32
33
34
35
36
5180-TQ/G
4550
5110-K/LG
4560
5075-K
C020-31
5075-K
4660
5075-K
4630
7835-K/U/B
C020-47
7835-K/U/B
3960
5097-K/G/B
C020-10
5097-K/G/B
4220
5097-K/G/B
4600
5087-K/U/B
C020-9
5087-K/U/B
4200
5087-K/U/B
4580
5200-N/R/B
F14
10A
7660-R/U/B
3720
5000-P
F20
5A
280
57-B
57-B
7000-U/R/B
3710
7000-U/R/B
FS13
15A
310
7815-K/O/B
C020-6
7815-K/O/B
3920
+15
+30

WITH CAB DUAL COMMAND WITH EDC

Transmission & EDC Processor continued

A001 Processor

C127 (Red processor connector)

PIN	Description
23	EDC Slip Lamp output
24	EDC status lamp output
25	+8.5V output to draft pins
26	C3 solenoid input
27	EDC valve power solenoid return input
28	EDC valve raise solenoid return input
29	12V power input fuse 14
30	Clutch pedal switch input
31	12V power input fuse 20
32	GND output
33	GND output
34	Power input fuse 13
35	Power input fuse 13
36	C1 solenoid return input

WIRE COLOUR CODES							
B	Black	R	Red	LG	Light Green	K	Pink
N	Brown	O	Orange	U	Blue	W	White
LN	Light Brown	Y	Yellow	TQ	Turquoise		
S	Slate	G	Green	P	Purple		

Line 1450–1800

From Serial Number 086641B
TS 90, 100, 110. With cab Dual Command with EDC

TRANSMISSION & EDC PROCESSOR (continued)
line 1450–1800

(5A)

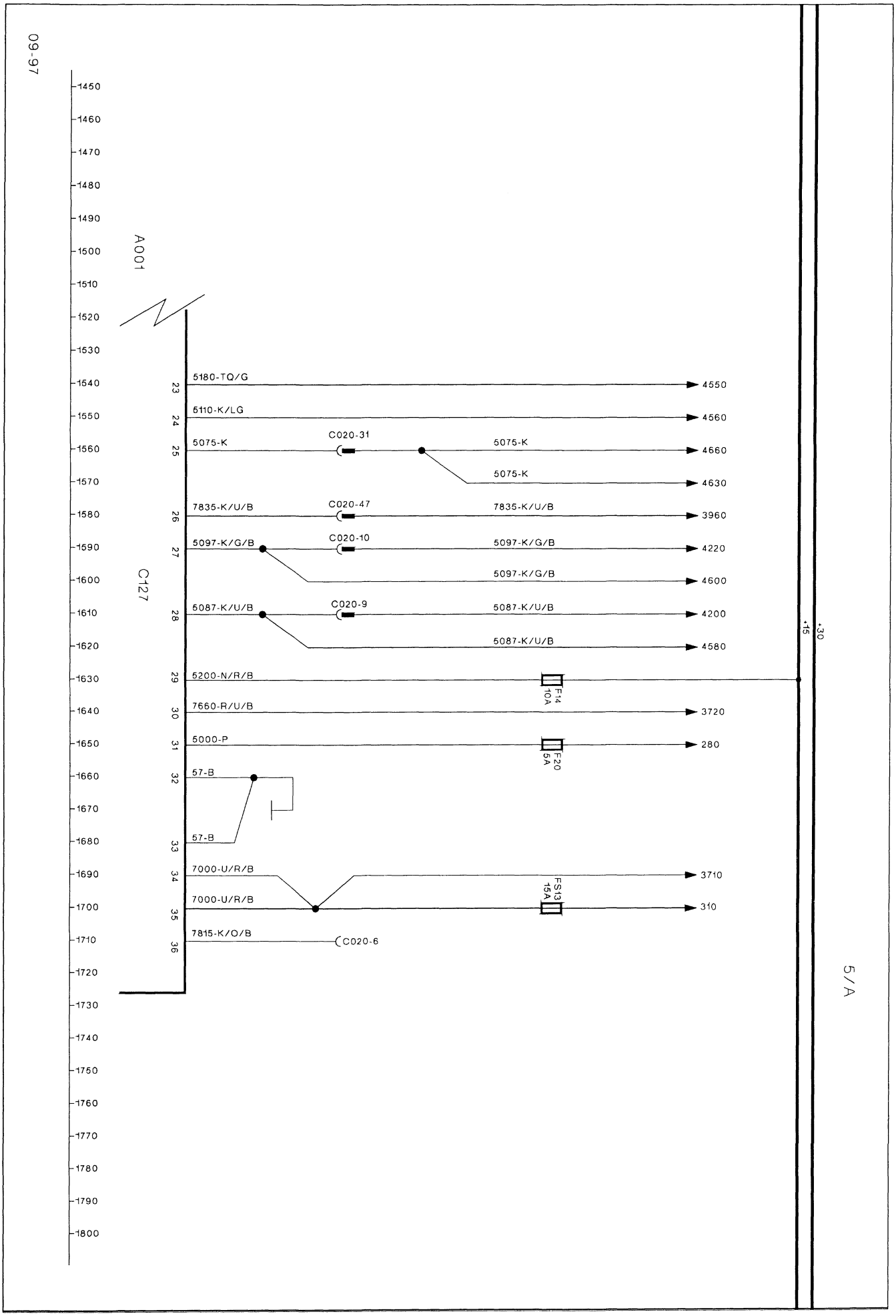
1450
1460
1470
1480
1490
1500
1510
1520
1530
1540
1550
1560
1570
1580
1590
1600
1610
1620
1630
1640
1650
1660
1670
1680
1690
1700
1710
1720
1730
1740
1750
1760
1770
1780
1790
1800
A001
C127
23
24
25
26
27
28
29
30
31
32
33
34
35
36
5180-TQ/G
4550
5110-K/LG
4560
5075-K
C020-31
5075-K
4660
5075-K
4630
7835-K/U/B
C020-47
7835-K/U/B
3960
5097-K/G/B
C020-10
5097-K/G/B
4220
5097-K/G/B
4600
5087-K/U/B
C020-9
5087-K/U/B
4200
5087-K/U/B
4580
5200-N/R/B
F14
10A
7660-R/U/B
3720
5000-P
F20
5A
280
57-B
57-B
7000-U/R/B
3710
7000-U/R/B
FS13
15A
310
7815-K/O/B
C020-6
+30
+15
5/A

WITH CAB DUAL COMMAND LESS EDC

Transmission & EDC Processor continued

A001 Processor

C127 (Red processor connector)

PIN	Description
23	EDC Slip Lamp output (not used)
24	EDC status lamp output (not used)
25	+8.5V output to draft pins (not used)
26	Low input
27	EDC valve power solenoid return input (not used)
28	EDC valve raise solenoid return input (not used)
29	12V power input fuse 14
30	Clutch pedal switch input
31	12V power input fuse 20
32	GND output
33	GND output
34	Power input fuse 13
35	Power input fuse 13
36	not used

WIRE COLOUR CODES							
B	Black	R	Red	LG	Light Green	K	Pink
N	Brown	O	Orange	U	Blue	W	White
LN	Light Brown	Y	Yellow	TQ	Turquoise		
S	Slate	G	Green	P	Purple		

Line 1450–1800

From Serial Number 086641B
TS 90, 100, 110. With cab Dual Command Less EDC

TRANSMISSION & EDC PROCESSOR (continued)
line 1450–1800

(5B)

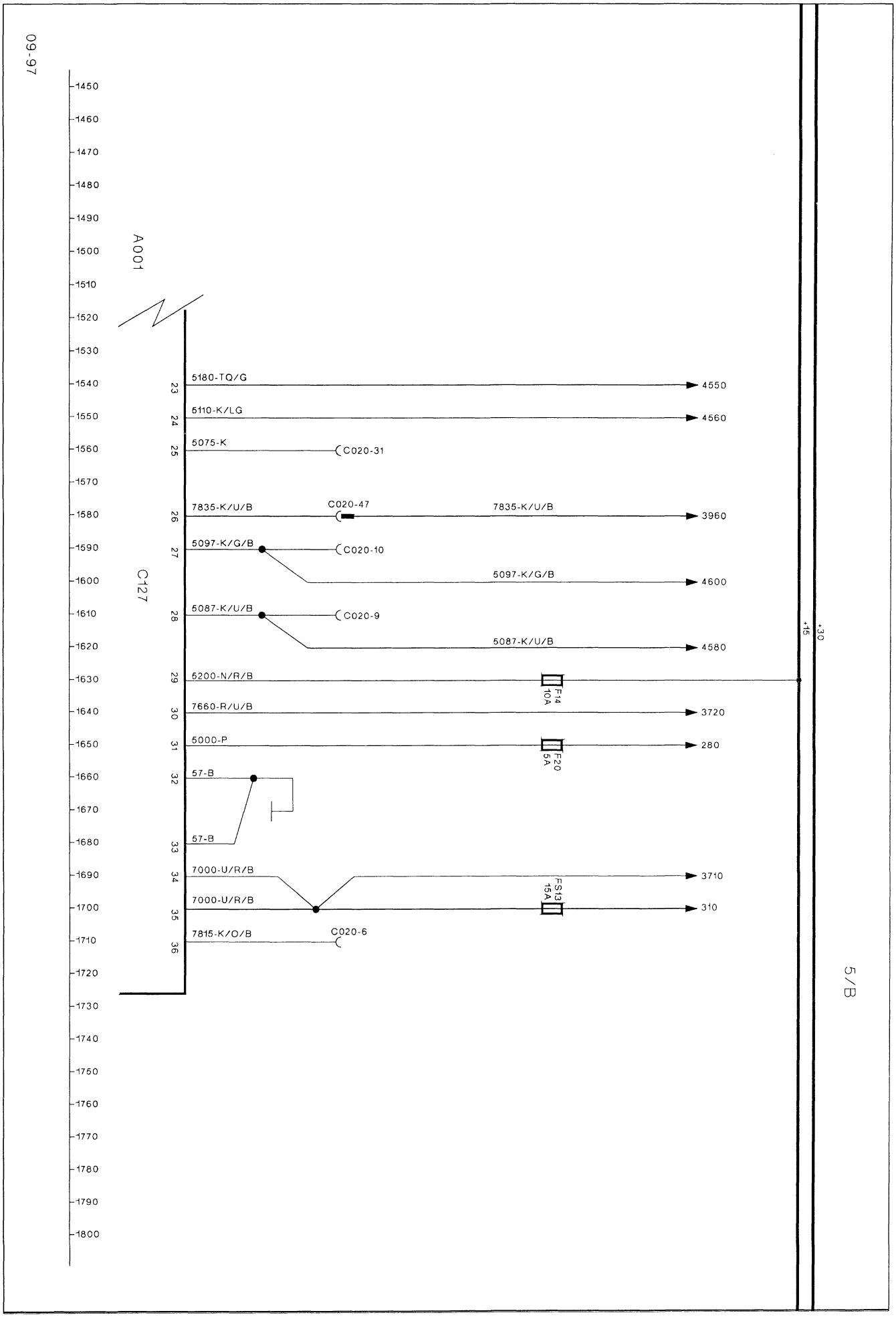
1450
1460
1470
1480
1490
1500
1510
1520
1530
1540
1550
1560
1570
1580
1590
1600
1610
1620
1630
1640
1650
1660
1670
1680
1690
1700
1710
1720
1730
1740
1750
1760
1770
1780
1790
1800
A001
C127
23
24
25
26
27
28
29
30
31
32
33
34
35
36
5180-TQ/G
4550
5110-K/LG
4560
5075-K
C020-31
7835-K/U/B
C020-47
7835-K/U/B
3960
5097-K/G/B
C020-10
5097-K/G/B
4600
5087-K/U/B
C020-9
5087-K/U/B
4580
5200-N/R/B
F14
10A
7660-R/U/B
3720
5000-P
F20
5A
280
57-B
57-B
7000-U/R/B
3710
FS13
15A
7000-U/R/B
310
7815-K/O/B
C020-6
+30
+15
5/B

NOTES PAGE

ELECTRONIC INSTRUMENT CLUSTER AND ASSOCIATED SENSORS

line 1810 - 2890

(6-8)

WITH CAB ELECTROSHIFT WITH EDC
WITH CAB DUAL COMMAND WITH EDC
WITH CAB DUAL COMMAND LESS EDC

EIC & Sensors

A EIC

C079 Instrument cluster connector

PIN	Description
1	Trailer #2 indicator light input
2	Eng. oil pressure light input
3	Trailer #1 indicator light input
4	Not used
5	left turn indicator light input
6	Power input fuse 9
7	GND output
8	Engine coolant temp. output
9	Alternator charging input
10	Main beam light input
11	Air filter restriction light input
12	Thermostart light input
13	Dual power Hi light input
14	LCD back light power input
15	Power input fuse F20
16	Fuel level input

B2 Engine coolant temperature sensor
B3 Fuel tank sender
F9 Fuse 9
S3 Engine oil pressure switch
S12 Air filter vacuum switch

WIRE COLOUR CODES							
B	Black	R	Red	LG	Light Green	K	Pink
N	Brown	O	Orange	U	Blue	W	White
LN	Light Brown	Y	Yellow	TQ	Turquoise		
S	Slate	G	Green	P	Purple		

From Serial Number 086641B
TS 90, 100, 110. With cab Electroshift with EDC
With cab Dual Command with EDC
With cab Dual Command Less EDC

EIC & SENSORS
line 1810–2170

(6)

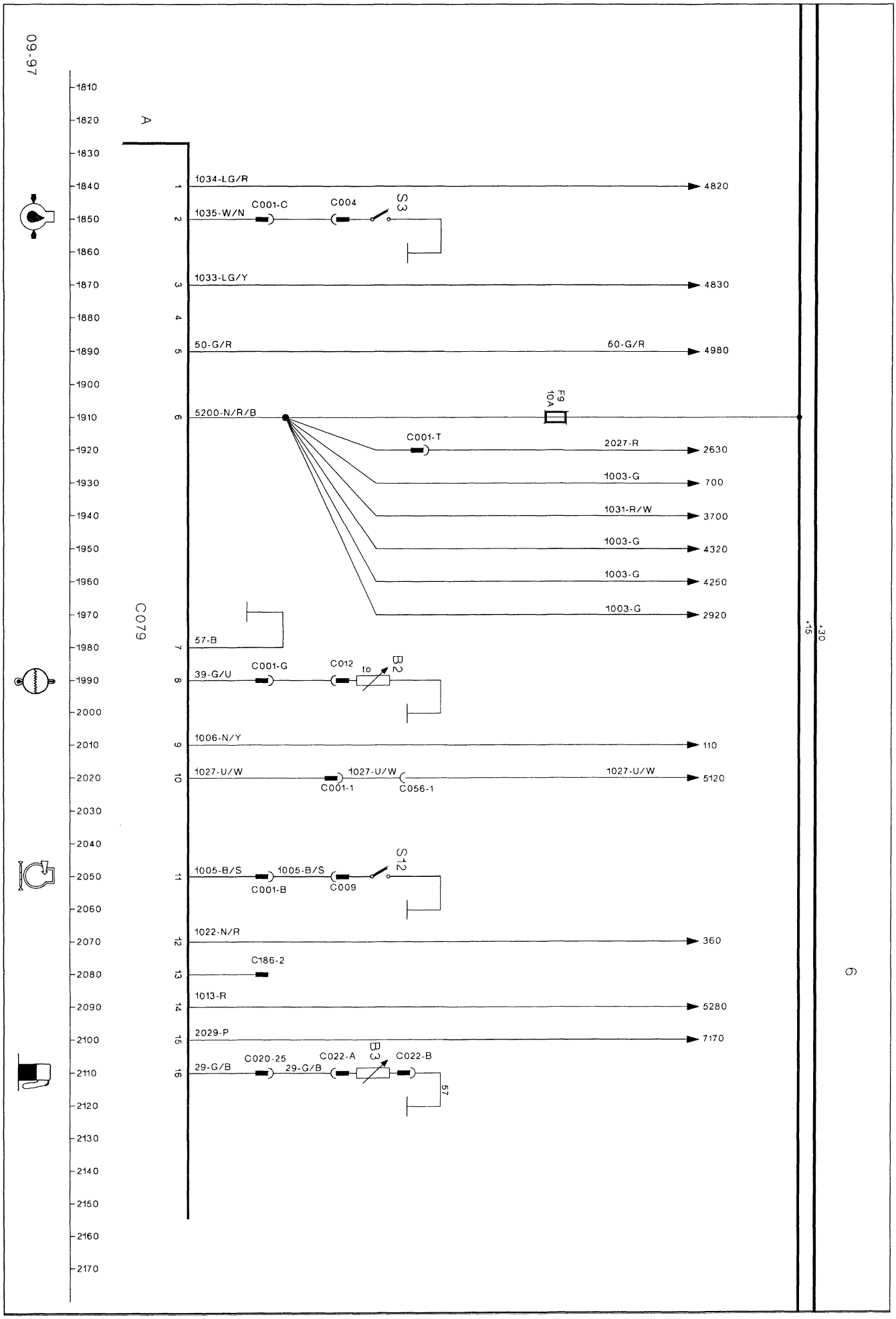
09-97
A
C079
1034-LG/R
4820
1035-W/N
C001-C
C004
S3
1033-LG/Y
4830
50-G/R
60-G/R
4980
5200-N/R/B
F9
10A
C001-T
2027-R
2630
1003-G
700
1031-R/W
3700
1003-G
4320
1003-G
4250
1003-G
2920
57-B
39-G/U
C001-G
C012
to
B2
1006-N/Y
110
1027-U/W
C001-1
1027-U/W
C056-1
1027-U/W
5120
1005-B/S
C001-B
1005-B/S
C009
S12
1022-N/R
360
C186-2
1013-R
5280
2029-P
7170
29-G/B
C020-25
29-G/B
C022-A
B3
C022-B
57
+30
+15
C

WITH CAB ELECTROSHIFT WITH EDC

EIC & Sensors continued

C080

PIN	Description
1	Transmission oil pressure light input
2	Differential lock light input
3	4WD engaged input
4	Hydraulic oil temp. light input
5	Not used
6	Transmission oil temp. light input
7	Dual command low light input
8	Brake fluid level & hand brake light input
9	Park brake light input
10	Engine RPM input
11	1000 rpm PTO light input
12	GND output
13	GND output
14	Right turn indicator light input
15	Low hydraulic charge pressure light input
16	GND output
17	Alarm external trigger output
18	GND output
19	Serial Cluster input
20	Serial clutch output

S4 Low charge pressure switch (CCLS)
S5 Hydraulic oil temperature switch
S7 Steering pressure switch
S8 Transmission pressure switch
S9 Transmission oil temperature switch
S10 Hand brake switch
S11 Brake fluid level switch

WIRE COLOUR CODES							
B	Black	R	Red	LG	Light Green	K	Pink
N	Brown	O	Orange	U	Blue	W	White
LN	Light Brown	Y	Yellow	TQ	Turquoise		
S	Slate	G	Green	P	Purple		

Line 2180-2530

From Serial Number 086641B
TS 90, 100, 110. With cab Electroshift with EDC

EIC & SENSORS (continued)
line 2180–2530

(7)

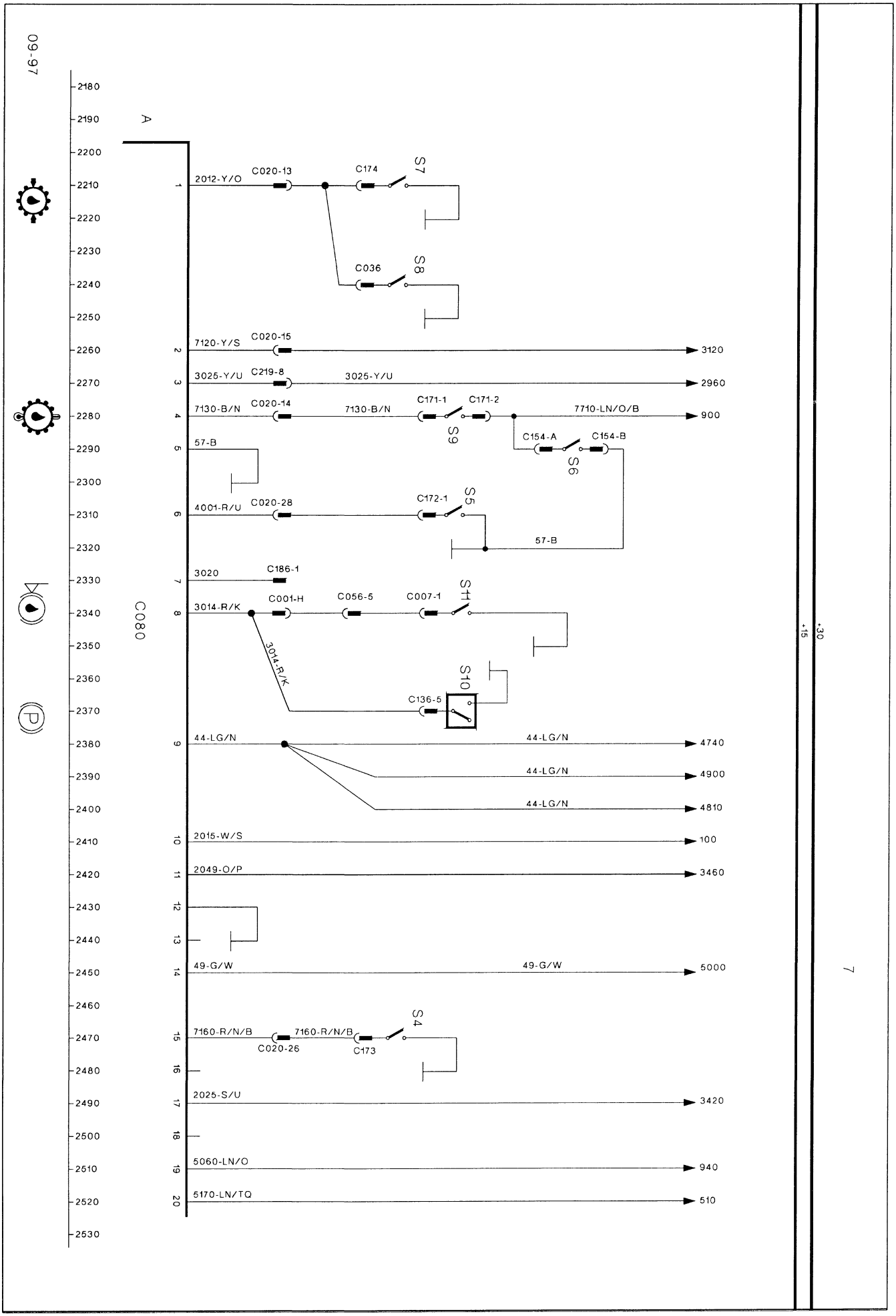
09-97
2180
2190
2200
2210
2220
2230
2240
2250
2260
2270
2280
2290
2300
2310
2320
2330
2340
2350
2360
2370
2380
2390
2400
2410
2420
2430
2440
2450
2460
2470
2480
2490
2500
2510
2520
2530
A
C080
2012-Y/O
C020-13
C174
S7
C036
S8
7120-Y/S
C020-15
3120
3025-Y/U
C219-8
3025-Y/U
2960
7130-B/N
C020-14
7130-B/N
C171-1
C171-2
S9
7710-LN/O/B
900
C154-A
C154-B
S6
57-B
4001-R/U
C020-28
C172-1
S5
57-B
3020
C186-1
3014-R/K
C001-H
C056-5
C007-1
S11
3014-R/K
C136-5
S10
44-LG/N
44-LG/N
4740
44-LG/N
4900
44-LG/N
4810
2015-W/S
100
2049-O/P
3460
49-G/W
49-G/W
5000
7160-R/N/B
C020-26
7160-R/N/B
C173
S4
2025-S/U
3420
5060-LN/O
940
5170-LN/TQ
510
+30
+15
7

WITH CAB DUAL COMMAND WITH EDC

EIC & Sensors continued

C080

PIN	Description
1	Transmission oil pressure light input
2	Differential lock light input
3	4WD engaged input
4	Hydraulic oil temp. light input
5	Not used
6	Transmission oil temp. light input
7	Dual command low light input
8	Brake fluid level & hand brake light input
9	Park brake light input
10	Engine RPM input
11	1000 rpm PTO light input
12	GND output
13	GND output
14	Right turn indicator light input
15	Low hydraulic charge pressure light input (not used)
16	GND output
17	Alarm external trigger output
18	GND output (not used)
19	Serial Cluster input
20	Serial clutch output

S4 Low charge pressure switch (CCLS)
S5 Hydraulic oil temperature switch
S7 Steering pressure switch
S8 Transmission pressure switch
S9 Transmission oil temperature switch
S10 Hand brake switch
S11 Brake fluid level switch

WIRE COLOUR CODES							
B	Black	R	Red	LG	Light Green	K	Pink
N	Brown	O	Orange	U	Blue	W	White
LN	Light Brown	Y	Yellow	TQ	Turquoise		
S	Slate	G	Green	P	Purple		

Line 2180-2530

From Serial Number 086641B
TS 90, 100, 110. With cab Dual Command with EDC

EIC & SENSORS (continued)
line 2180–2530

(7A)

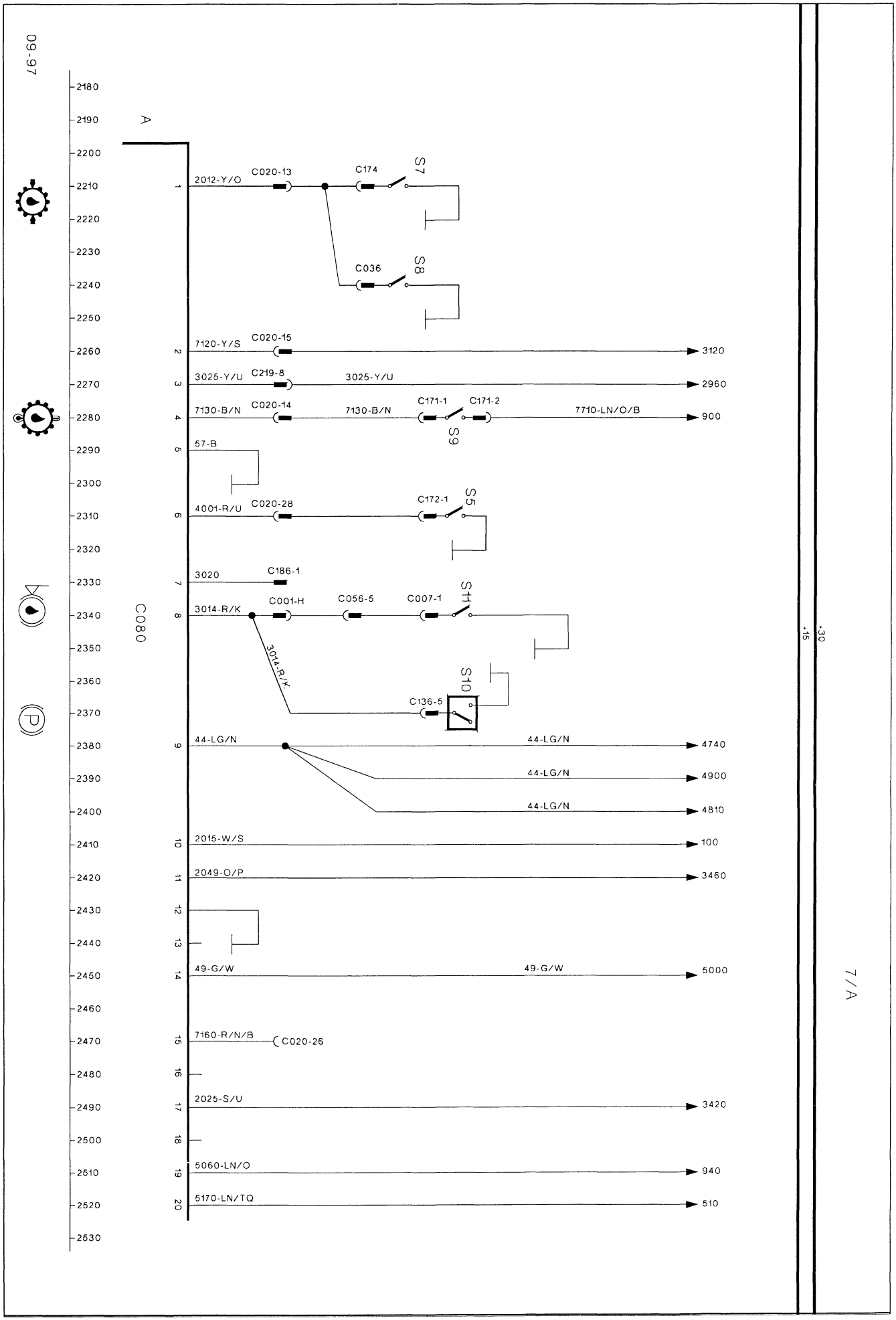
09-97
2180
2190
2200
2210
2220
2230
2240
2250
2260
2270
2280
2290
2300
2310
2320
2330
2340
2350
2360
2370
2380
2390
2400
2410
2420
2430
2440
2450
2460
2470
2480
2490
2500
2510
2520
2530
A
C080
1
2
3
4
5
6
7
8
9
10
11
12
13
14
15
16
17
18
19
20
2012-Y/O
C020-13
C174
S7
C036
S8
7120-Y/S
C020-15
3120
3025-Y/U
C219-8
3025-Y/U
2960
7130-B/N
C020-14
7130-B/N
C171-1
C171-2
S9
7710-LN/O/B
900
57-B
4001-R/U
C020-28
C172-1
S5
3020
C186-1
3014-R/K
C001-H
C056-5
C007-1
S11
3014-R/K
C136-5
S10
44-LG/N
44-LG/N
4740
44-LG/N
4900
44-LG/N
4810
2015-W/S
100
2049-O/P
3460
49-G/W
49-G/W
5000
7160-R/N/B
C020-26
2025-S/U
3420
5060-LN/O
940
5170-LN/TQ
510
+30
+15
7/A

WITH CAB DUAL COMMAND LESS EDC

EIC & Sensors continued

C080

PIN	Description
1	Transmission oil pressure light input
2	Differential lock light input
3	4WD engaged input
4	Hydraulic oil temp. light input
5	Case earth
6	Transmission oil temp. light input
7	Not used
8	Brake fluid level & hand brake light input
9	Park brake light input
10	Engine RPM input
11	1000 rpm PTO light input
12	GND output
13	not used
14	Right turn indicator light input
15	Low hydraulic charge pressure light input (not used)
16	GND output (not used)
17	Alarm external trigger output
18	not used
19	Serial Cluster input
20	Serial clutch output

S4 Low charge pressure switch (CCLS)
S5 Hydraulic oil temperature switch
S7 Steering pressure switch
S8 Transmission pressure switch
S9 Transmission oil temperature switch
S10 Hand brake switch
S11 Brake fluid level switch

WIRE COLOUR CODES							
B	Black	R	Red	LG	Light Green	K	Pink
N	Brown	O	Orange	U	Blue	W	White
LN	Light Brown	Y	Yellow	TQ	Turquoise		
S	Slate	G	Green	P	Purple		

Line 2180–2530

From Serial Number 086641B
TS 90, 100, 110. With cab Dual Command Less EDC

EIC & SENSORS (continued)
line 2180–2530

(7B)

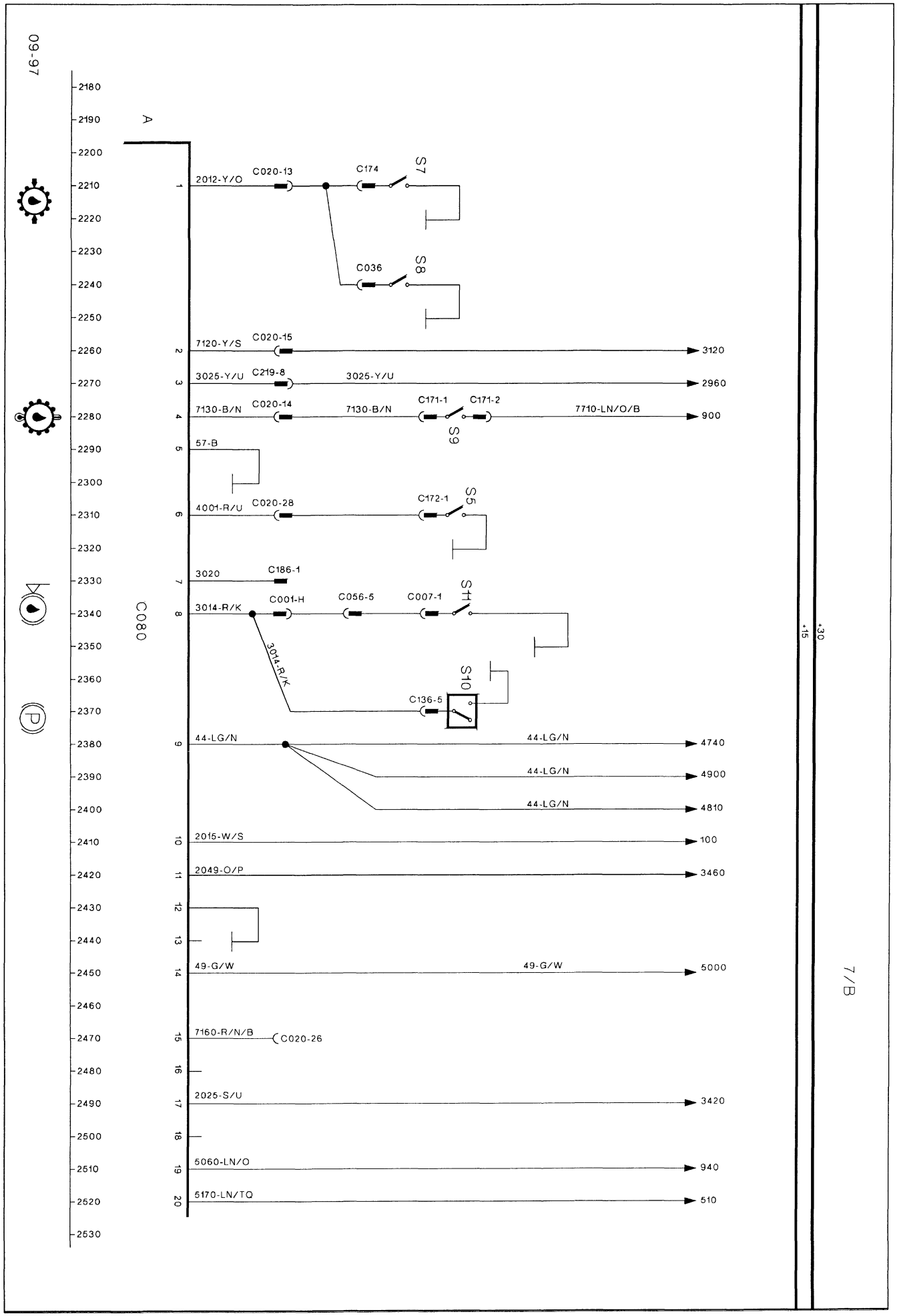
09-97
A
C080
2180
2190
2200
2210
2220
2230
2240
2250
2260
2270
2280
2290
2300
2310
2320
2330
2340
2350
2360
2370
2380
2390
2400
2410
2420
2430
2440
2450
2460
2470
2480
2490
2500
2510
2520
2530
1
2
3
4
5
6
7
8
9
10
11
12
13
14
15
16
17
18
19
20
2012-Y/O
C020-13
C174
S7
C036
S8
7120-Y/S
C020-15
3120
3025-Y/U
C219-8
3025-Y/U
2960
7130-B/N
C020-14
7130-B/N
C171-1
C171-2
S9
7710-LN/O/B
900
57-B
4001-R/U
C020-28
C172-1
S5
3020
C186-1
3014-R/K
C001-H
C056-5
C007-1
S11
3014-R/K
C136-5
S10
44-LG/N
44-LG/N
4740
44-LG/N
4900
44-LG/N
4810
2015-W/S
100
2049-O/P
3460
49-G/W
49-G/W
5000
7160-R/N/B
C020-26
2025-S/U
3420
5060-LN/O
940
5170-LN/TQ
510
+30
+15
7/B

WITH CAB ELECTROSHIFT WITH EDC
WITH CAB DUAL COMMAND WITH EDC
WITH CAB DUAL COMMAND LESS EDC
EIC & Sensors continued

C081

PIN	Description
1	Wheel speed input
2	Implement status input
3	Radar input
4	Radar output
5	+5V output to oil pressure sensor
6	Engine oil pressure input
7	12V out to shut down relay
8	GND control for shut down relay
9	Fuel level sensor ground input
10	GND output
11	Oil pressure GND output

B1 Engine oil pressure
B4 Radar

WIRE COLOUR CODES							
B	Black	R	Red	LG	Light Green	K	Pink
N	Brown	O	Orange	U	Blue	W	White
LN	Light Brown	Y	Yellow	TQ	Turquoise		
S	Slate	G	Green	P	Purple		

Line 2540–2890

From Serial Number 086641B
TS 90, 100, 110. With cab Electroshift with EDC
With cab Dual Command with EDC
With cab Dual Command Less EDC

EIC & SENSOR (continued)
line 2540–2890

(8)

09-97

2540
2550
2560
2570
2580
2590
2600
2610
2620
2630
2640
2650
2660
2670
2680
2690
2700
2710
2720
2730
2740
2750
2760
2770
2780
2790
2800
2810
2820
2830
2840
2850
2860
2870
2880
2890

A

C081

1 2016-Y/G → 630
2 2026-S/R → 650
3 2027-R — C001-U → 1920
4 → 2020-G → 520
5 2014-G/K — C001-S — 2014-G/K — C003-3 → B1
6 31-Y/S — C001-A — 31-Y/S — C003-2 → B1
57-B — C001-J — 2095-G/W/B — C003-1 → B1
7 2070-O/U/B → 180
8 2080-O/R → 190
9 2095-G/W/B
10 57-B → 57-B
11 2095-G/W/B

B4 (IC068)
4 2 3 1

+30
+15

8

NOTES PAGE

FOUR WHEEL DRIVE AND DIFFERENTIAL LOCK

line 2900 – 3260

(9)

WITH CAB ELECTROSHIFT WITH EDC
WITH CAB DUAL COMMAND WITH EDC
WITH CAB DUAL COMMAND LESS EDC

Four Wheel Drive

F15 Fuse 15
S13 FWD Switch
S16 Brake switch left hand
S17 Brake switch right hand
Y3 FWD Solenoid

Differential Lock

S14 Differential lock switch
S15 Diff lock engaged light switch
Y4 Differential lock solenoid

WIRE COLOUR CODES							
B	Black	R	Red	LG	Light Green	K	Pink
N	Brown	O	Orange	U	Blue	W	White
LN	Light Brown	Y	Yellow	TQ	Turquoise		
S	Slate	G	Green	P	Purple		

Line 2900–3260

From Serial Number 086641B
TS 90, 100, 110. With cab Electroshift with EDC
With cab Dual Command with EDC
With cab Dual Command Less EDC

FOUR WHEEL DRIVE AND DIFFERENTIAL LOCK
line 2900–3260

(9)

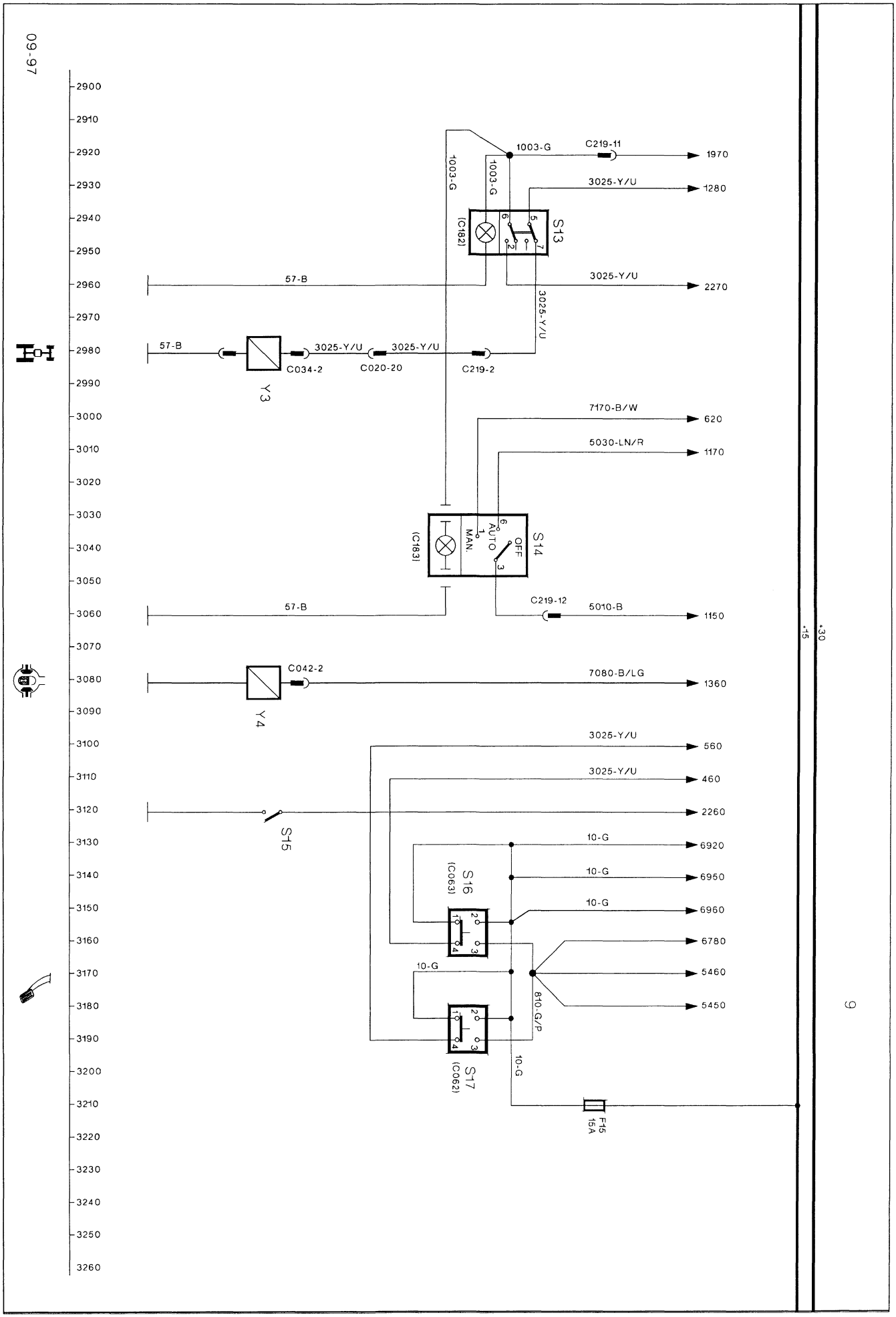
09-97
2900
2910
2920
2930
2940
2950
2960
2970
2980
2990
3000
3010
3020
3030
3040
3050
3060
3070
3080
3090
3100
3110
3120
3130
3140
3150
3160
3170
3180
3190
3200
3210
3220
3230
3240
3250
3260
1003-G
C219-11
1970
3025-Y/U
1280
S13
(C182)
57-B
3025-Y/U
2270
C034-2
C020-20
C219-2
Y3
7170-B/W
620
5030-LN/R
1170
S14
(C183)
AUTO
MAN.
OFF
C219-12
5010-B
1150
C042-2
7080-B/LG
1360
Y4
560
460
2260
S15
10-G
6920
6950
6960
6780
5460
5450
S16
(C063)
S17
(C062)
810-G/P
F15
15A
+30
+15
9

NOTES PAGE

POWER TAKE OFF

line 3270 - 3620

(10)

WITH CAB ELECTROSHIFT WITH EDC
WITH CAB DUAL COMMAND WITH EDC
WITH CAB DUAL COMMAND LESS EDC

PTO

H1 PTO lamp
F21 Fuse 21
KV Relay
S18 PTO switch
S19 Seat switch
S20 540/1000 PTO speed switch
V1 Relay
Y5 PTO solenoid

WIRE COLOUR CODES							
B	Black	R	Red	LG	Light Green	K	Pink
N	Brown	O	Orange	U	Blue	W	White
LN	Light Brown	Y	Yellow	TQ	Turquoise		
S	Slate	G	Green	P	Purple		

Line 3270–3620

From Serial Number 086641B
TS 90, 100, 110. With cab Electroshift with EDC
With cab Dual Command with EDC
With cab Dual Command Less EDC

POWER TAKE OFF
line 3270–3620

(10)

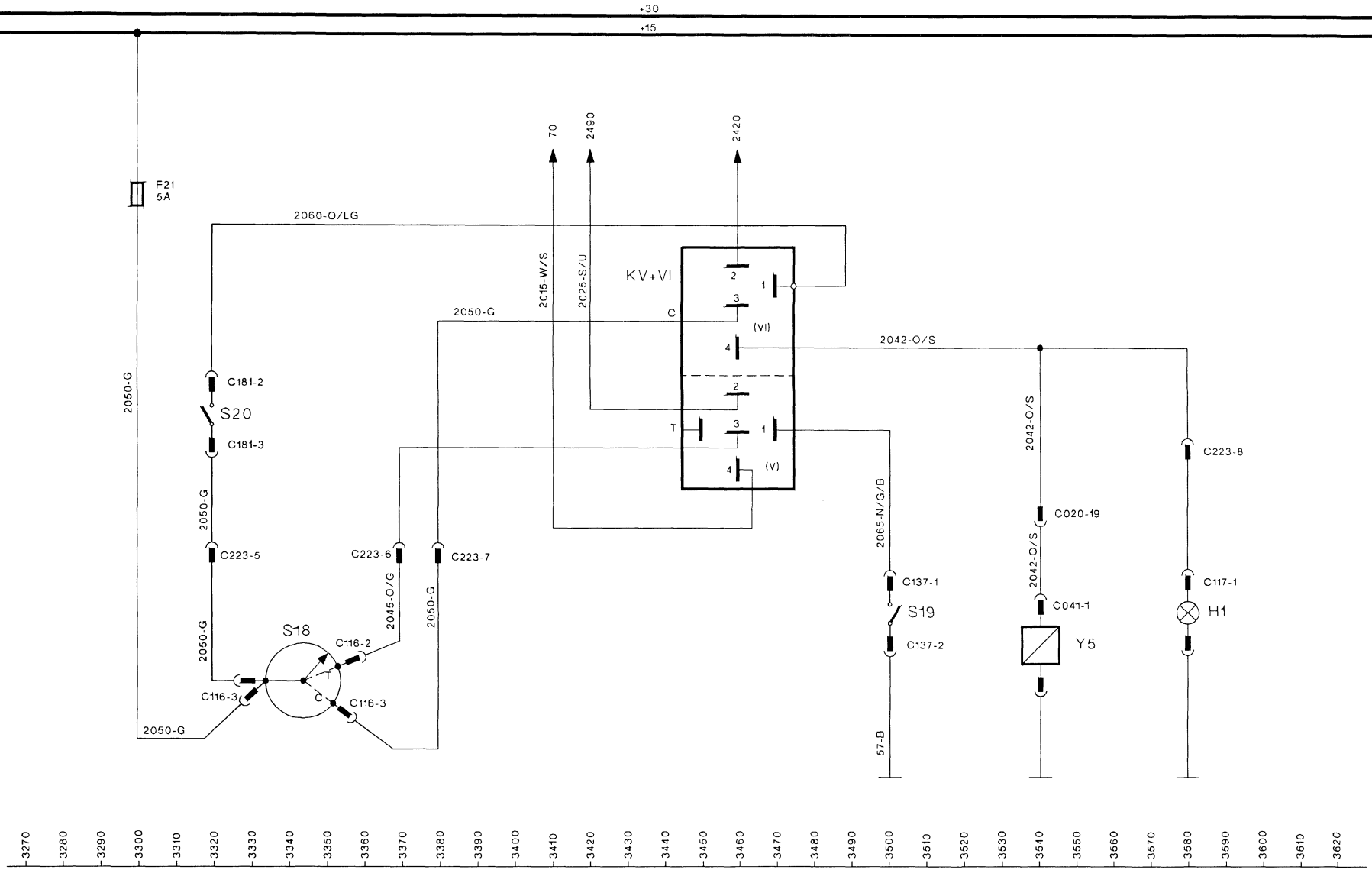
+30
+15
F21
5A
2060-O/LG
2050-G
70
2490
2420
2015-W/S
2025-S/U
KV+VI
2
1
3
C
(VI)
4
2050-G
2042-O/S
C181-2
S20
C181-3
2
T
3
1
4
(V)
2042-O/S
C223-8
2050-G
C223-5
C223-6
C223-7
2065-N/G/B
C020-19
2045-O/G
2050-G
C137-1
2042-O/S
S18
C116-2
S19
C041-1
C117-1
2050-G
T
C137-2
H1
C116-3
C
C116-3
Y5
2050-G
57-B
3270
3280
3290
3300
3310
3320
3330
3340
3350
3360
3370
3380
3390
3400
3410
3420
3430
3440
3450
3460
3470
3480
3490
3500
3510
3520
3530
3540
3550
3560
3570
3580
3590
3600
3610
3620

NOTES PAGE

TRANSMISSION

line 3630 – 3990

(11–11A)

WITH CAB ELECTROSHIFT WITH EDC

16 X 16 Electroshift

A002 Gear display module
B5 Clutch pedal potentiometer
S22 Creeper switch
S50 Transmission oil pressure switch
S21 Clutch pedal switch
S23 Shuttle dump switch
S24 Up shift switch
S25 Down shift switch
S26 High range switch
S27 Low range switch
S28 1- 4 range switch
S29 5- 8 range switch
Y6 Creeper solenoid
Y7 PWM Valve 1
Y8 PWM Valve 2
Y9 PWM Valve 3
Y10 PWM Valve 4

WIRE COLOUR CODES							
B	Black	R	Red	LG	Light Green	K	Pink
N	Brown	O	Orange	U	Blue	W	White
LN	Light Brown	Y	Yellow	TQ	Turquoise		
S	Slate	G	Green	P	Purple		

Line 3630–3990

From Serial Number 086641B
TS 90, 100, 110. With cab Electroshift with EDC

16 X 16 ELECTROSHIFT
line 3630-3990

(11)

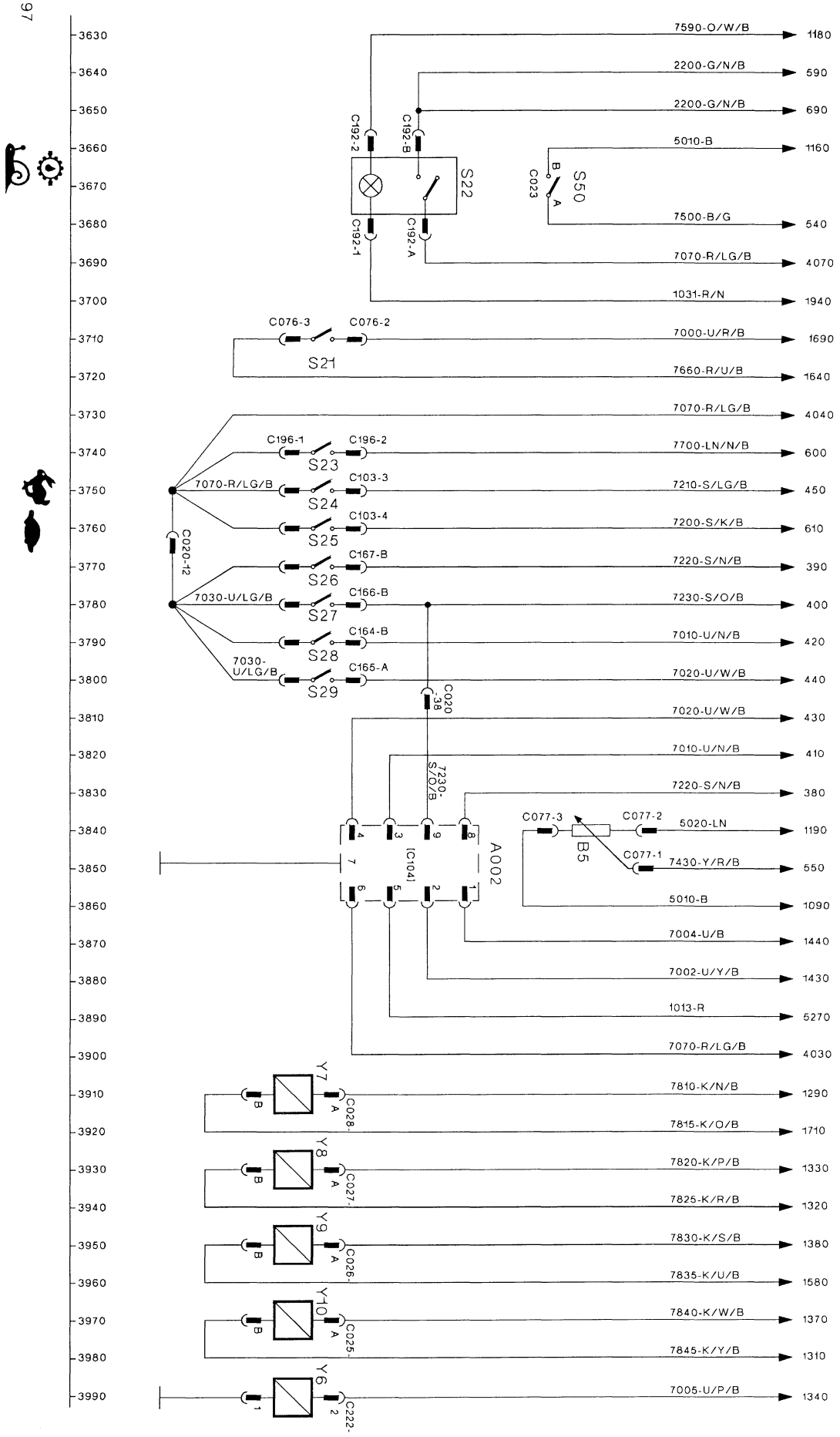
3630
3640
3650
3660
3670
3680
3690
3700
3710
3720
3730
3740
3750
3760
3770
3780
3790
3800
3810
3820
3830
3840
3850
3860
3870
3880
3890
3900
3910
3920
3930
3940
3950
3960
3970
3980
3990
7590-O/W/B
1180
2200-G/N/B
590
2200-G/N/B
690
5010-B
1160
7500-B/G
540
7070-R/LG/B
4070
1031-R/N
1940
7000-U/R/B
1690
7660-R/U/B
1640
7070-R/LG/B
4040
7700-LN/N/B
600
7210-S/LG/B
450
7200-S/K/B
610
7220-S/N/B
390
7230-S/O/B
400
7010-U/N/B
420
7020-U/W/B
440
7020-U/W/B
430
7010-U/N/B
410
7220-S/N/B
380
5020-LN
1190
7430-Y/R/B
550
5010-B
1090
7004-U/B
1440
7002-U/Y/B
1430
1013-R
5270
7070-R/LG/B
4030
7810-K/N/B
1290
7815-K/O/B
1710
7820-K/P/B
1330
7825-K/R/B
1320
7830-K/S/B
1380
7835-K/U/B
1580
7840-K/W/B
1370
7845-K/Y/B
1310
7005-U/P/B
1340
C192-2
C192-B
C192-1
C192-A
S22
S50
C023
C076-3
C076-2
S21
C196-1
C196-2
S23
7070-R/LG/B
C103-3
S24
C103-4
S25
C020-12
C167-B
S26
7030-U/LG/B
C166-B
S27
C164-B
S28
7030-U/LG/B
C165-A
S29
C020-38
7230-S/O/B
A002
(C104)
C077-3
C077-2
C077-1
B5
Y7
Y8
Y9
Y10
Y6
C028-
C027-
C026-
C025-
C222-
+30
+15

WITH CAB DUAL COMMAND WITH EDC AND LESS EDC

24x24 Dual Command

B5 Clutch pedal potentiometer
S50 Transmission oil pressure switch
S21 Clutch pedal switch
S23 Shuttle dump switch
S24 Up shift switch
S25 Down shift switch
S51 1st- 2nd switch
S52 3rd- 4th switch
Y14 Dump solenoid
Y15 Lo - PWM valve
Y16 Hi PWM Valve 2

WIRE COLOUR CODES							
B	Black	R	Red	LG	Light Green	K	Pink
N	Brown	O	Orange	U	Blue	W	White
LN	Light Brown	Y	Yellow	TQ	Turquoise		
S	Slate	G	Green	P	Purple		

Line 3630-3990

From Serial Number 086641B
TS 90, 100, 110. With cab Dual Command with EDC and Less EDC

24 x 24 Dual Command line 3630–3990

(11A)

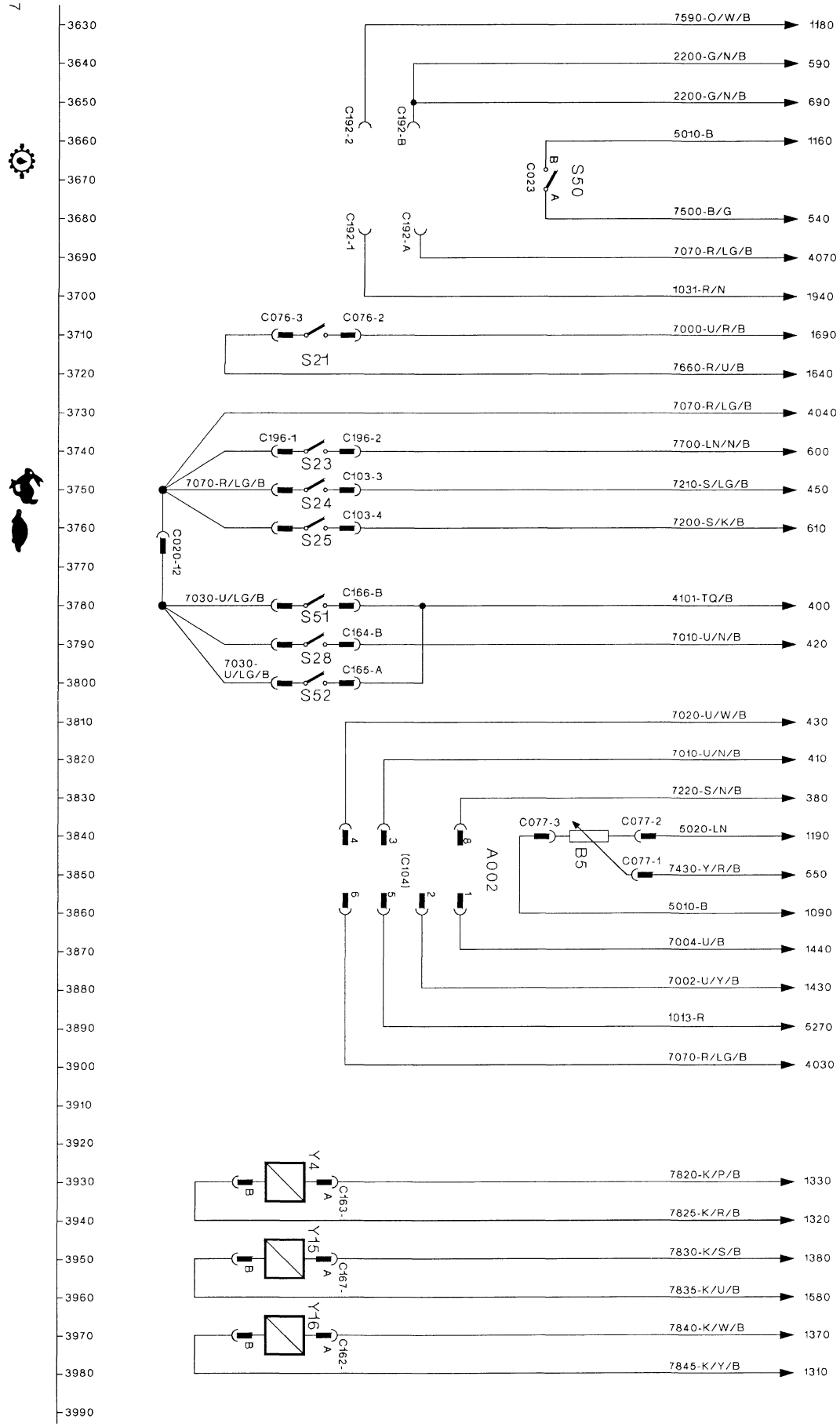
3630
3640
3650
3660
3670
3680
3690
3700
3710
3720
3730
3740
3750
3760
3770
3780
3790
3800
3810
3820
3830
3840
3850
3860
3870
3880
3890
3900
3910
3920
3930
3940
3950
3960
3970
3980
3990
7590-O/W/B
1180
2200-G/N/B
590
2200-G/N/B
690
5010-B
1160
7500-B/G
540
7070-R/LG/B
4070
1031-R/N
1940
7000-U/R/B
1690
7660-R/U/B
1640
7070-R/LG/B
4040
7700-LN/N/B
600
7210-S/LG/B
450
7200-S/K/B
610
4101-TQ/B
400
7010-U/N/B
420
7020-U/W/B
430
7010-U/N/B
410
7220-S/N/B
380
5020-LN
1190
7430-Y/R/B
550
5010-B
1090
7004-U/B
1440
7002-U/Y/B
1430
1013-R
5270
7070-R/LG/B
4030
7820-K/P/B
1330
7825-K/R/B
1320
7830-K/S/B
1380
7835-K/U/B
1580
7840-K/W/B
1370
7845-K/Y/B
1310
C192-2
C192-B
C192-1
C192-A
C023
S50
C076-3
C076-2
S21
C196-1
C196-2
S23
7070-R/LG/B
C103-3
S24
C103-4
S25
C020-12
7030-U/LG/B
C166-B
S51
C164-B
S28
7030-U/LG/B
C165-A
S52
C077-3
C077-2
C077-1
B5
[C104]
A002
Y4
C163-
Y15
C167-
Y16
C162-
+30
+15
11/A

NOTES PAGE

ELECTRONIC DRAFT CONTROL

line 4000 - 4730

(12-13B)

WITH CAB ELECTROSHIFT WITH EDC
WITH CAB DUAL COMMAND WITH EDC

Electronic draft control

F12 Fuse 12
S30 Raise/work switch
S31 Fender switch left hand
S32 Fender switch right hand
Y11 Raise solenoid (EDC valve)
Y12 Lower solenoid (EDC valve)

WIRE COLOUR CODES							
B	Black	R	Red	LG	Light Green	K	Pink
N	Brown	O	Orange	U	Blue	W	White
LN	Light Brown	Y	Yellow	TQ	Turquoise		
S	Slate	G	Green	P	Purple		

Line 4000–4360

From Serial Number 086641B
TS 90, 100, 110. With cab Electroshift with EDC
With cab Dual Command with EDC

ELECTRONIC DRAFT CONTROL
line 4000–4360

(12)

4000
4010
4020
4030
4040
4050
4060
4070
4080
4090
4100
4110
4120
4130
4140
4150
4160
4170
4180
4190
4200
4210
4220
4230
4240
4250
4260
4270
4280
4290
4300
4310
4320
4330
4340
4350
4360

F12
10A

71B → 270

7070-R/LG/B → 3900

7070-R/LG/B → 3730

7070-R/LG/B → 580

7070-R/LG/B → 3690

7070-R/LG/B → 4540

7070-R/LG/B

S30 (C102)

7
5
2
4

5125-TQ/W → 830

5130-TQ/P → 870

5125-TQ/P

(C217) Y11

1
2

5085-K/U → 1410

5087-K/U/B → 1610

(C218) Y12

1
2

5090-K/R → 1390

5097-K/G/B → 1590

5150-G → 1960

C135-1 S31

2
3

5100-K/W → 5100-K/W → 570

5095-K/G → 5095-K/G → 850

C134-1 S32

2
3

5100-K/W

5095-K/G

5150-G → 1950

+30
+15

WITH CAB DUAL COMMAND LESS EDC

Electronic draft control

F12 Fuse 12
S30 Raise/work switch (not used)
S31 Fender switch left hand (not used)
S32 Fender switch right hand (not used)

WIRE COLOUR CODES							
B	Black	R	Red	LG	Light Green	K	Pink
N	Brown	O	Orange	U	Blue	W	White
LN	Light Brown	Y	Yellow	TQ	Turquoise		
S	Slate	G	Green	P	Purple		

Line 4000–4360

From Serial Number 086641B
TS 90, 100, 110. With cab Dual Command Less EDC

ELECTRONIC DRAFT CONTROL
line 4000–4360

(12B)

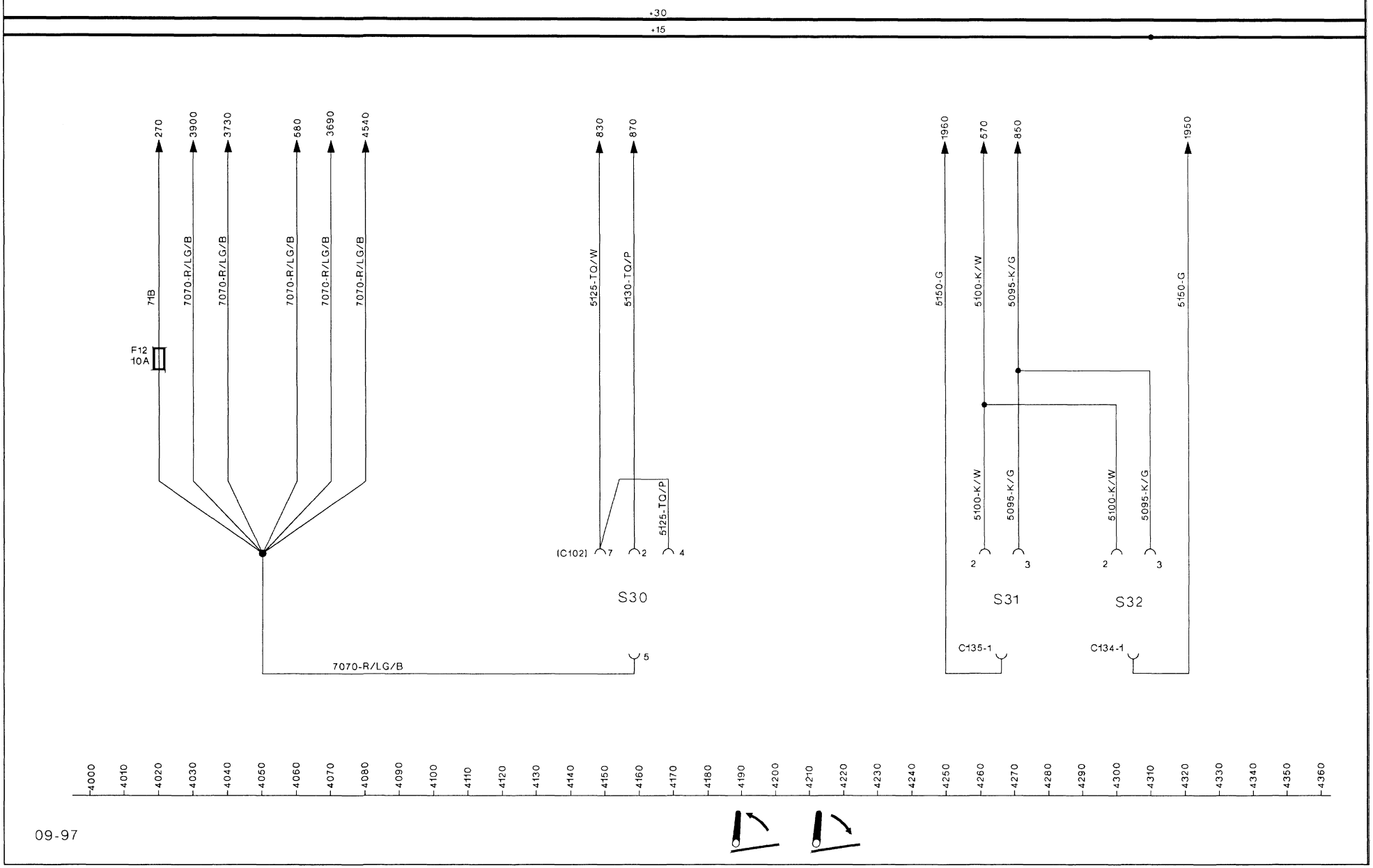
+30
+15
270
3900
3730
580
3690
4540
830
870
1960
570
850
1950
71B
7070-R/LG/B
7070-R/LG/B
7070-R/LG/B
7070-R/LG/B
7070-R/LG/B
F12
10A
5125-TQ/W
5130-TQ/P
5125-TQ/P
(C102)
7
2
4
S30
5
7070-R/LG/B
5150-G
5100-K/W
5095-K/G
5150-G
5100-K/W
5095-K/G
5100-K/W
5095-K/G
2
3
2
3
S31
S32
C135-1
C134-1
4000
4010
4020
4030
4040
4050
4060
4070
4080
4090
4100
4110
4120
4130
4140
4150
4160
4170
4180
4190
4200
4210
4220
4230
4240
4250
4260
4270
4280
4290
4300
4310
4320
4330
4340
4350
4360

WITH CAB ELECTROSHIFT WITH EDC
WITH CAB DUAL COMMAND WITH EDC

Electronic draft control continued

A003 EDC Panel
B6 Height limit potentiometer
B7 Slip limit potentiometer
B8 Drop rate potentiometer
B9 Draft/position potentiometer
B10 Rocker shaft potentiometer
B11 Quadrant lever potentiometer
B12 Draft pin left hand
B13 Draft pin right hand
H2 Status lamp
H3 Slip lamp
H4 Raise lamp
H5 Lower lamp

WIRE COLOUR CODES							
B	Black	R	Red	LG	Light Green	K	Pink
N	Brown	O	Orange	U	Blue	W	White
LN	Light Brown	Y	Yellow	TQ	Turquoise		
S	Slate	G	Green	P	Purple		

Line 4000–4360

From Serial Number 086641B
TS 90, 100, 110. With cab Electroshift with EDC
With cab Dual Command with EDC

ELECTRONIC DRAFT CONTROL
line 4370–4730

(13)

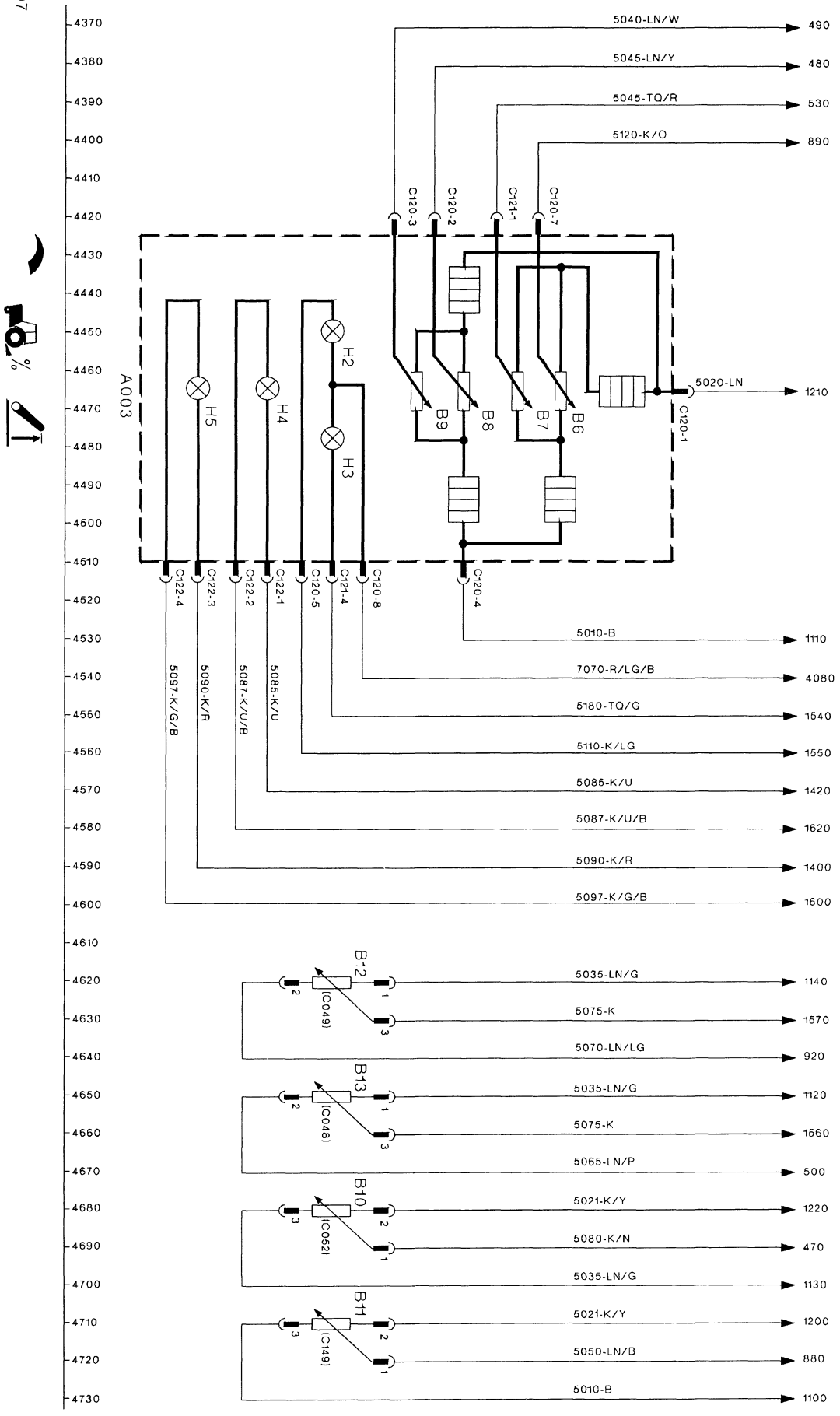
4370
4380
4390
4400
4410
4420
4430
4440
4450
4460
4470
4480
4490
4500
4510
4520
4530
4540
4550
4560
4570
4580
4590
4600
4610
4620
4630
4640
4650
4660
4670
4680
4690
4700
4710
4720
4730
A003
H5
H4
H2
H3
B9
B8
B7
B6
C120-3
C120-2
C121-1
C120-7
C120-1
C122-4
C122-3
C122-2
C122-1
C120-5
C121-4
C120-8
C120-4
5040-LN/W
490
5045-LN/Y
480
5045-TQ/R
530
5120-K/O
890
5020-LN
1210
5010-B
1110
7070-R/LG/B
4080
5180-TQ/G
1540
5110-K/LG
1550
5085-K/U
1420
5087-K/U/B
1620
5090-K/R
1400
5097-K/G/B
1600
5097-K/G/B
5090-K/R
5087-K/U/B
5085-K/U
B12
(C049)
5035-LN/G
1140
5075-K
1570
5070-LN/LG
920
B13
(C048)
5035-LN/G
1120
5075-K
1560
5065-LN/P
500
B10
(C052)
5021-K/Y
1220
5080-K/N
470
5035-LN/G
1130
B11
(C149)
5021-K/Y
1200
5050-LN/B
880
5010-B
1100
+30
+15

WITH CAB DUAL COMMAND LESS EDC

Electronic draft control continued

A003 EDC Panel (not used)

B11 Quadrant lever potentiometer (not used)

WIRE COLOUR CODES							
B	Black	R	Red	LG	Light Green	K	Pink
N	Brown	O	Orange	U	Blue	W	White
LN	Light Brown	Y	Yellow	TQ	Turquoise		
S	Slate	G	Green	P	Purple		

Line 4000–4360

From Serial Number 086641B
TS 90, 100, 110. With cab Dual Command Less EDC

ELECTRONIC DRAFT CONTROL
line 4370–4730

(13B)

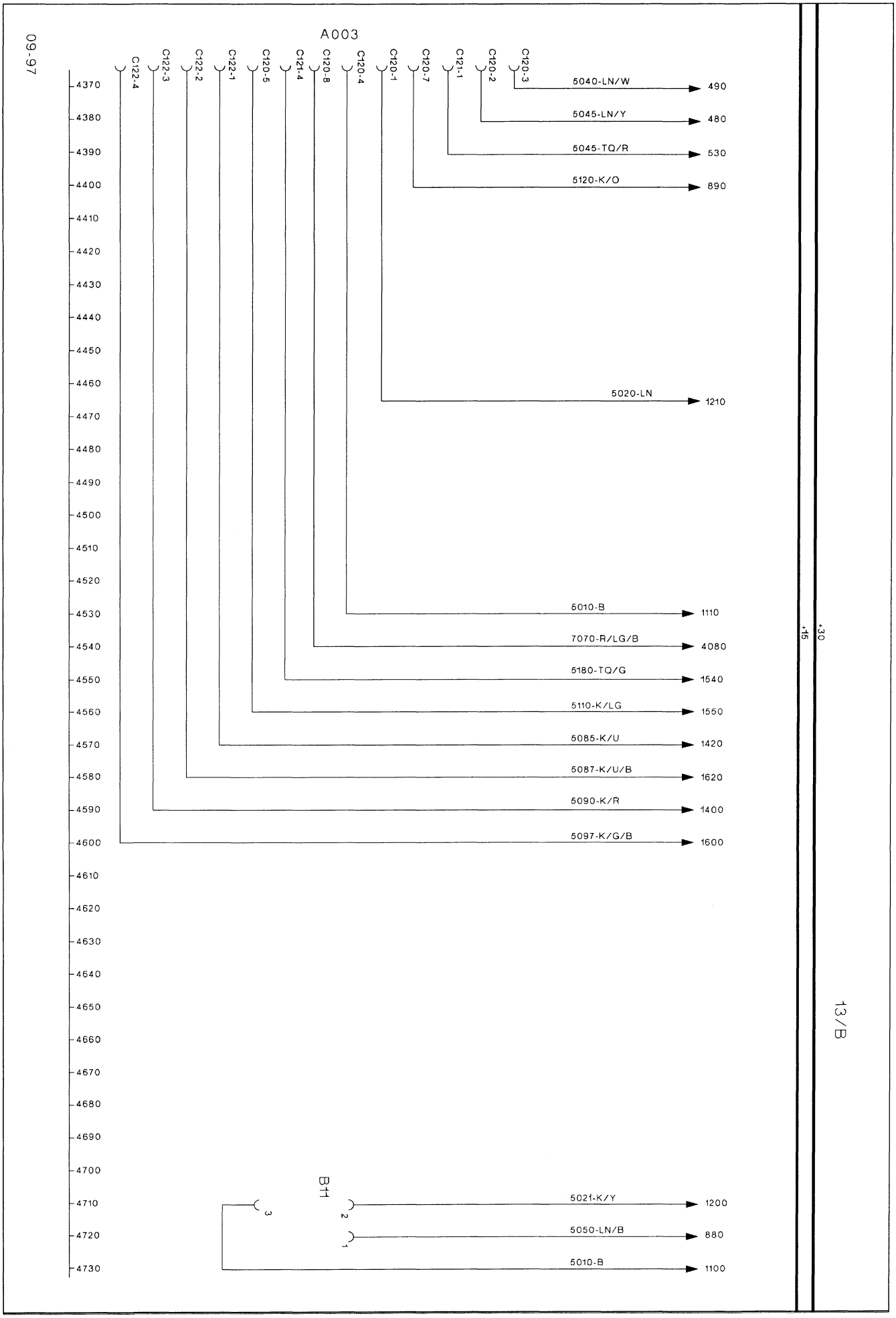
09-97
A003
C122-4
C122-3
C122-2
C122-1
C120-5
C121-4
C120-8
C120-4
C120-1
C120-7
C121-1
C120-2
C120-3
4370
4380
4390
4400
4410
4420
4430
4440
4450
4460
4470
4480
4490
4500
4510
4520
4530
4540
4550
4560
4570
4580
4590
4600
4610
4620
4630
4640
4650
4660
4670
4680
4690
4700
4710
4720
4730
5040-LN/W
490
5045-LN/Y
480
5045-TQ/R
530
5120-K/O
890
5020-LN
1210
5010-B
1110
7070-R/LG/B
4080
5180-TQ/G
1540
5110-K/LG
1550
5085-K/U
1420
5087-K/U/B
1620
5090-K/R
1400
5097-K/G/B
1600
B11
3
2
1
5021-K/Y
1200
5050-LN/B
880
5010-B
1100
+30
-15
13/B

NOTES PAGE

INDICATORS AND HAZARDS

line 4740 – 5100

(14)

WITH CAB ELECTROSHIFT WITH EDC
WITH CAB DUAL COMMAND WITH EDC
WITH CAB DUAL COMMAND LESS EDC

Indicators and Hazards

F10 Fuse 10
F11 Fuse 11
F18 Fuse 18

H6 Front indicator lamp left hand
H7 Front indicator lamp right hand (ISO)
H8 Rear indicator lamp left hand
H9 Rear indicator lamp right hand

H10 Front indicator lamp left hand
H11 Front indicator lamp right hand (NASO)
H12 Rear indicator lamp left hand
H13 Rear indicator lamp right hand

K3 Flasher unit relay

KXI Flasher mode relay
KXII

S33 Indicator switch
S34 Hazard switch

WIRE COLOUR CODES							
B	Black	R	Red	LG	Light Green	K	Pink
N	Brown	O	Orange	U	Blue	W	White
LN	Light Brown	Y	Yellow	TQ	Turquoise		
S	Slate	G	Green	P	Purple		

From Serial Number 086641B
TS 90, 100, 110. With cab Electroshift with EDC
With cab Dual Command with EDC
With cab Dual Command Less EDC

INDICATORS AND HAZARDS
line 4740-5100

(14)

4740
4750
4760
4770
4780
4790
4800
4810
4820
4830
4840
4850
4860
4870
4880
4890
4900
4910
4920
4930
4940
4950
4960
4970
4980
4990
5000
5010
5020
5030
5040
5050
5060
5070
5080
5090
5100
44-LG/N
2380
1020-G
F18 10A
1021-P
290
F10 15A
44-LG/N
57-B
K3
3002-G/W
S34
(C083)
3000-G/LG
1033-LG/Y
1034-LG/R
44-LG/N
2400
1034-LG/R
1840
1033-LG/Y
1870
3001-G/R
376-P/N
6230
F11 30A
1004-G
40
MF3 30
1024-R
5320
13-U/R
5180
12-U/W
5130
S33
44-LG/N
2390
3001-G/R
4011
6280
3002-G/W
(C074)
3000-G/LG
KXI
KXII
H8
(C133)
50-G/R
50-G/R
1890
H6
(C067)
49-G/W
49-G/W
49-G/W
2450
H7
(C066)
H9
(C132)
50-G/R
49-G/W
6820
H10
(C086)
H12
(C093)
50-G/R
6790
H11
(C087)
49-G/W
49-G/W
H13
(C094)
+30
+15

NOTES PAGE

MAIN LIGHTS

line 5110 – 5470

(15)

WITH CAB ELECTROSHIFT WITH EDC
WITH CAB DUAL COMMAND WITH EDC
WITH CAB DUAL COMMAND LESS EDC

Main Lights

F1 Fuse one
F2 Fuse two
F3 Fuse three
F4 Fuse four

H14 Head lamp left hand
H15 Head lamp right hand
H16 Front side lamp left hand
H17 Front side lamp right hand
H18 Rear brake/tail lamp left hand
H19 Rear brake/tail lamp right hand
H22 Licence plate lamp lower

WIRE COLOUR CODES							
B	Black	R	Red	LG	Light Green	K	Pink
N	Brown	O	Orange	U	Blue	W	White
LN	Light Brown	Y	Yellow	TQ	Turquoise		
S	Slate	G	Green	P	Purple		

From Serial Number 086641B
TS 90, 100, 110. With cab Electroshift with EDC
With cab Dual Command with EDC
With cab Dual Command Less EDC

MAIN LIGHTS
line 5110–5470

(15)

09-97
5110
5120
5130
5140
5150
5160
5170
5180
5190
5200
5210
5220
5230
5240
5250
5260
5270
5280
5290
5300
5310
5320
5330
5340
5350
5360
5370
5380
5390
5400
5410
5420
5430
5440
5450
5460
5470
1026-U/W
2020
C056-1
C001-1
1027-U/W
F1 15A
12-U/W
4890
H14 (C060)
1027-U/W
1030-U/R
H15 (C059)
1030-U/R
C056-2
C001-2
1030-U/R
F2 15A
13-U/R
4880
1013-R
5590
1013-R
5490
C220-7
1013-R
6270
1013-R
6870
C223-9
1013-R
6690
1013-R
6760
1013-R
3890
1013-R
2090
1013-R
5520
1013-R
5810
1013-R
5670
F3 15A
1013-R
1024-R
4870
H19 (C132)
1014-R
1013-R
H16 (C067)
H17 (C066)
1014-R/B
H22 (C131)
H18 (C133)
1014-R/B
1014-R/B
F4 15A
1014-R/B
6770
810-G/P
3180
810-G/P
3170
+30
+15

NOTES PAGE

WORK LAMPS

line 5480 – 5840

(16)

WITH CAB ELECTROSHIFT WITH EDC
WITH CAB DUAL COMMAND WITH EDC
WITH CAB DUAL COMMAND LESS EDC

Work Lamps

F5 Fuse 5 front work lamps
F6 Fuse 6 rear work lamps
F7 Fuse 7 lower work lamps

H20 Licence plate lamp top right hand
H22 Licence plate lamp top left hand
H23 Upper front worklamp left hand
H24 Upper front worklamp right hand
H25 Lower front worklamp left hand
H26 Lower front worklamp right hand
H27 Upper rear work lamp left hand
H28 Upper rear work lamp right hand
H29 Lower rear work lamp left hand
H30 Lower rear work lamp right hand

KB Relay B front worklamps
KC Relay C rear worklamps
KD Relay D lower front work lamps
KE Relay E lower rear work lamps

S36 Front upper lamp switch
S37 Front lower lamp switch
S38 Rear lamp switch

WIRE COLOUR CODES							
B	Black	R	Red	LG	Light Green	K	Pink
N	Brown	O	Orange	U	Blue	W	White
LN	Light Brown	Y	Yellow	TQ	Turquoise		
S	Slate	G	Green	P	Purple		

From Serial Number 086641B
TS 90, 100, 110. With cab Electroshift with EDC
With cab Dual Command with EDC
With cab Dual Command Less EDC

WORK LAMPS
line 5480-5840

(16)

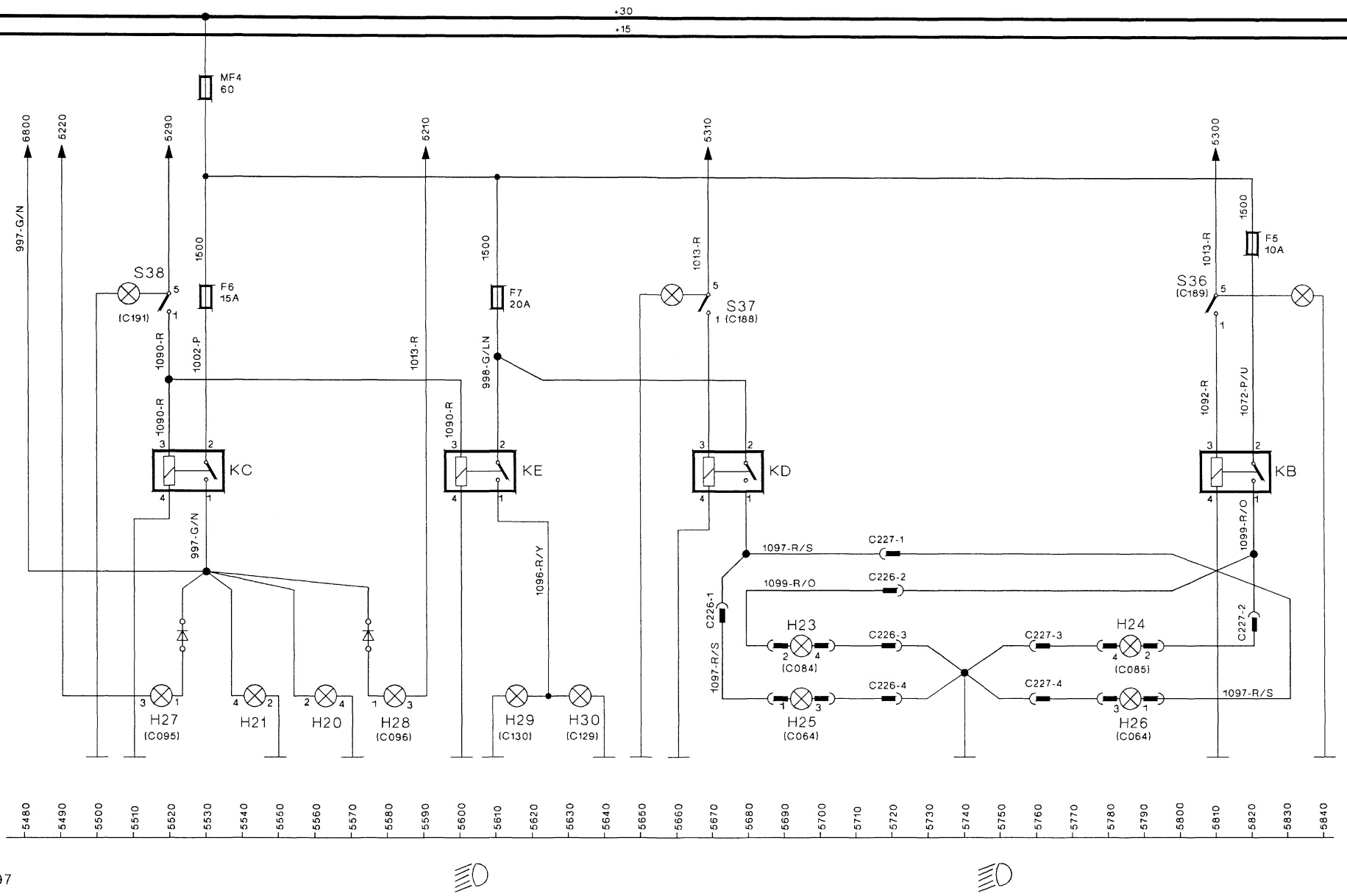
+30
+15
MF4
60
6800
5220
5290
5210
5310
5300
997-G/N
1500
F6
15A
F7
20A
F5
10A
S38
(C191)
S37
1 (C188)
S36
(C189)
1013-R
1090-R
1002-P
998-G/LN
1092-R
1072-P/U
1099-R/O
KC
KE
KD
KB
997-G/N
1096-R/Y
1097-R/S
C227-1
C226-2
C226-1
C226-3
C227-3
C227-2
C226-4
C227-4
H23
H24
(C084)
(C085)
H27
(C095)
H21
H20
H28
(C096)
H29
(C130)
H30
(C129)
H25
(C064)
H26
(C064)
5480
5490
5500
5510
5520
5530
5540
5550
5560
5570
5580
5590
5600
5610
5620
5630
5640
5650
5660
5670
5680
5690
5700
5710
5720
5730
5740
5750
5760
5770
5780
5790
5800
5810
5820
5830
5840

NOTES PAGE

WIPERS AND WASHERS

line 5850 - 6210

(17)

WITH CAB ELECTROSHIFT WITH EDC
WITH CAB DUAL COMMAND WITH EDC
WITH CAB DUAL COMMAND LESS EDC

Wipers and Washers

F17 Fuse 17

KVIII Relay VIII intermittent module front
KIX Relay IX intermittent module rear

M2 Front wiper motor
M3 Rear wiper motor
M4 Washer motor
M5 Washer motor

S39 Front wiper and washer switch
S40 Rear wiper and washer switch

WIRE COLOUR CODES							
B	Black	R	Red	LG	Light Green	K	Pink
N	Brown	O	Orange	U	Blue	W	White
LN	Light Brown	Y	Yellow	TQ	Turquoise		
S	Slate	G	Green	P	Purple		

From Serial Number 086641B
TS 90, 100, 110. With cab Electroshift with EDC
With cab Dual Command with EDC
With cab Dual Command Less EDC

WIPERS AND WASHERS
line 5850-6210

(17)

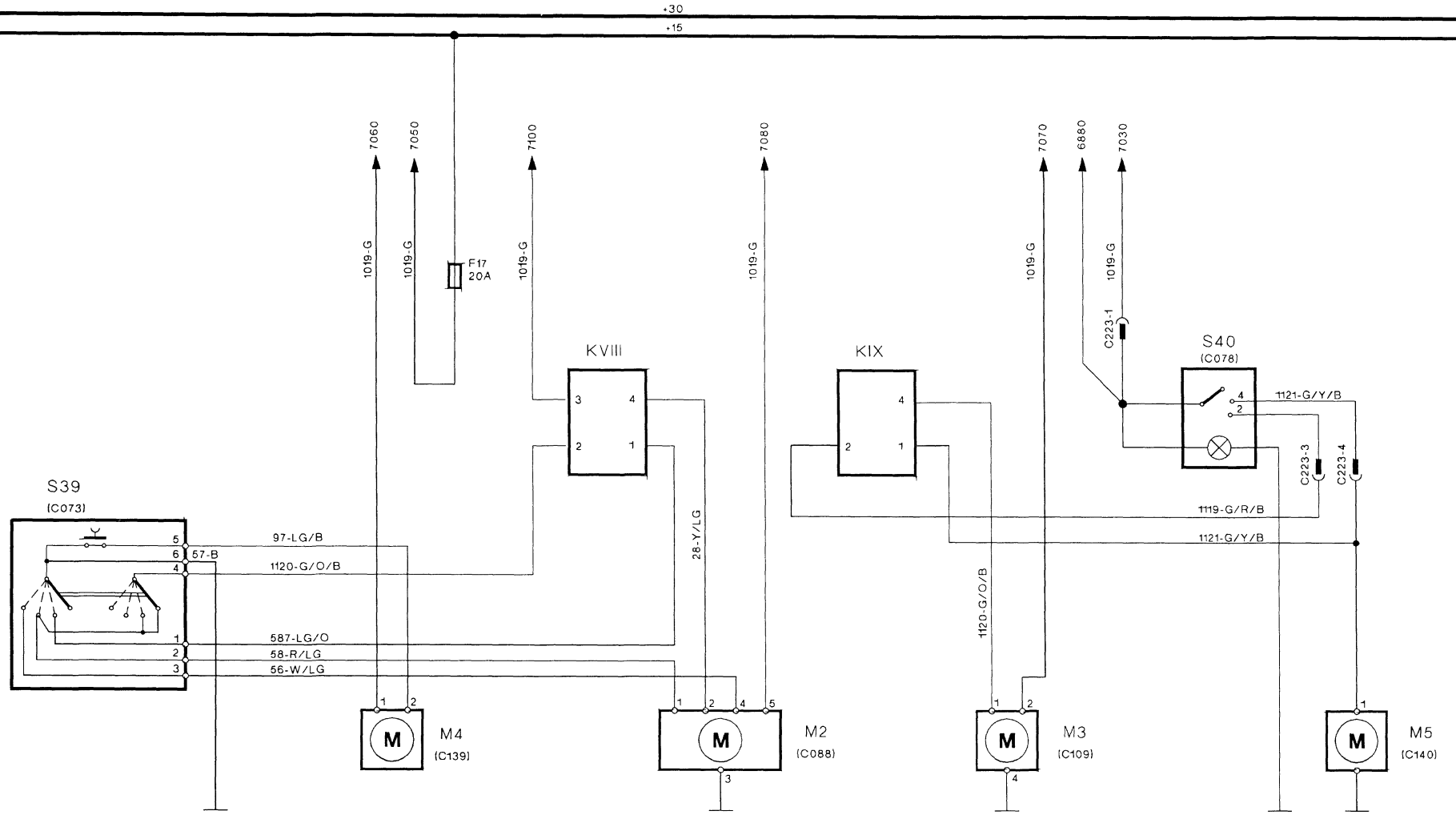
+30
+15
7060
7050
7100
7080
7070
6880
7030
1019-G
F17
20A
KVIII
KIX
S40
(C078)
C223-1
C223-3
C223-4
1121-G/Y/B
1119-G/R/B
S39
(C073)
97-LG/B
57-B
1120-G/O/B
28-Y/LG
587-LG/O
58-R/LG
56-W/LG
M4
(C139)
M2
(C088)
M3
(C109)
M5
(C140)
5850 5860 5870 5880 5890 5900 5910 5920 5930 5940 5950 5960 5970 5980 5990 6000 6010 6020 6030 6040 6050 6060 6070 6080 6090 6100 6110 6120 6130 6140 6150 6160 6170 6180 6190 6200 6210

NOTES PAGE

AIR-CONDITIONING AND CAB HEATING

line 6220 - 6570

(18)

WITH CAB ELECTROSHIFT WITH EDC
WITH CAB DUAL COMMAND WITH EDC
WITH CAB DUAL COMMAND LESS EDC

Air conditioning/Cab heating

B14 Temperature control potentiometer
E1 Compressor clutch
F16 Fuse 16
M6 Blower motor
R3 Blower speed resistor
R5 Speed resistor
S41 High and low pressure switch
S42 Low pressure cut out switch
S43 Temperature exchange control switch
S44 Blower speed switch

WIRE COLOUR CODES							
B	Black	R	Red	LG	Light Green	K	Pink
N	Brown	O	Orange	U	Blue	W	White
LN	Light Brown	Y	Yellow	TQ	Turquoise		
S	Slate	G	Green	P	Purple		

From Serial Number 086641B
TS 90, 100, 110. With cab Electroshift with EDC
With cab Dual Command with EDC
With cab Dual Command Less EDC

AIR-CONDITIONING & CAB HEATING
line 6220-6570

(18)

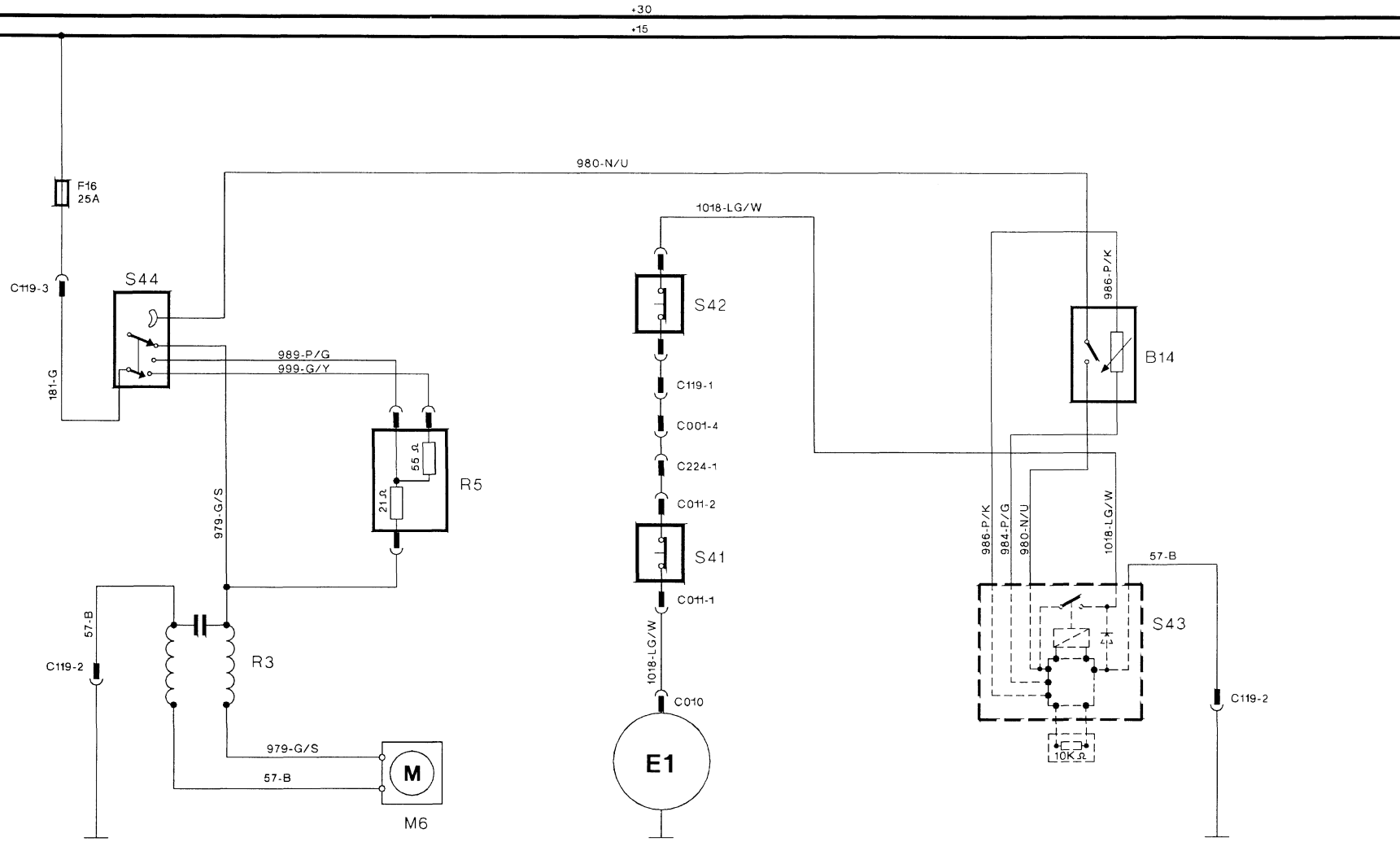
+30
+15
F16
25A
C119-3
S44
181-G
980-N/U
989-P/G
999-G/Y
55 Ω
21 Ω
R5
979-G/S
57-B
C119-2
R3
979-G/S
57-B
M
M6
1018-LG/W
S42
C119-1
C001-4
C224-1
C011-2
S41
C011-1
1018-LG/W
C010
E1
986-P/K
B14
986-P/K
984-P/G
980-N/U
1018-LG/W
57-B
S43
10KΩ
C119-2
6220
6230
6240
6250
6260
6270
6280
6290
6300
6310
6320
6330
6340
6350
6360
6370
6380
6390
6400
6410
6420
6430
6440
6450
6460
6470
6480
6490
6500
6510
6520
6530
6540
6550
6560
6570

NOTES PAGE

CAB ACCESSORIES

line 6220 – 7290

(19–21)

WITH CAB ELECTROSHIFT WITH EDC
WITH CAB DUAL COMMAND WITH EDC
WITH CAB DUAL COMMAND LESS EDC

Cab accessories

A004 Radio
B15 Speaker
B16 Speaker
B17 Horn
F22 Fuse 22
F23 Fuse 23
KII Accessory Socket Relay
R4 Cigar Lighter
S48 Beacon Switch
X6 Roof beacon socket left hand
X7 Roof beacon socket right hand

WIRE COLOUR CODES							
B	Black	R	Red	LG	Light Green	K	Pink
N	Brown	O	Orange	U	Blue	W	White
LN	Light Brown	Y	Yellow	TQ	Turquoise		
S	Slate	G	Green	P	Purple		

From Serial Number 086641B
TS 90, 100, 110. With cab Electroshift with EDC
With cab Dual Command with EDC
With cab Dual Command Less EDC

CAB ACCESSORIES
line 6220–7290

(19)

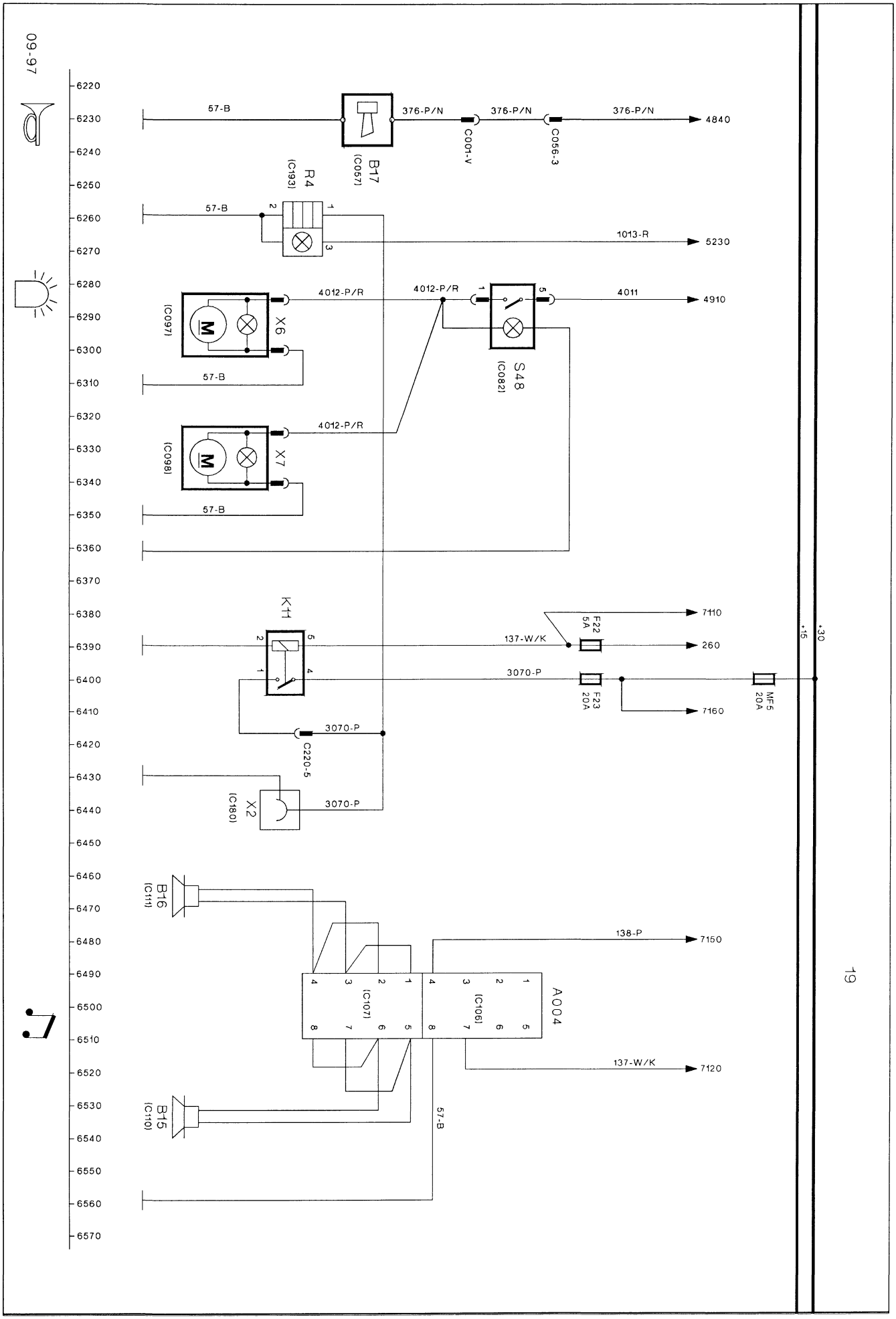
09-97
6220
6230
6240
6250
6260
6270
6280
6290
6300
6310
6320
6330
6340
6350
6360
6370
6380
6390
6400
6410
6420
6430
6440
6450
6460
6470
6480
6490
6500
6510
6520
6530
6540
6550
6560
6570
57-B
376-P/N
376-P/N
376-P/N
4840
B17
(C057)
C001-V
C056-3
R4
(C193)
57-B
1013-R
5230
4012-P/R
4012-P/R
4011
4910
(C097)
X6
S48
(C082)
57-B
4012-P/R
(C098)
X7
57-B
K11
7110
F22
5A
137-W/K
260
3070-P
F23
20A
MF5
20A
7160
3070-P
C220-5
X2
(C180)
3070-P
B16
(C111)
138-P
7150
(C107)
(C106)
A004
137-W/K
7120
B15
(C110)
57-B
+15
+30
19

WITH CAB ELECTROSHIFT WITH EDC
WITH CAB DUAL COMMAND WITH EDC
WITH CAB DUAL COMMAND LESS EDC

Cab accessories continued

E2 Interior light
E3 Console light
M7 Air seat pump
P1 Clock/spare
P2 Clock B pillar
S45 Interior light door switches
S46 Interior light door switches
S47 40 amp. terminals and external 40 amp. 4 pin power switch

WIRE COLOUR CODES							
B	Black	R	Red	LG	Light Green	K	Pink
N	Brown	O	Orange	U	Blue	W	White
LN	Light Brown	Y	Yellow	TQ	Turquoise		
S	Slate	G	Green	P	Purple		

Line 6580–6930

From Serial Number 086641B
TS 90, 100, 110. With cab Electroshift with EDC
With cab Dual Command with EDC
With cab Dual Command Less EDC

CAB ACCESSORIES (cont)
line 6580-6930

(20)

6580
6590
6600
6610
6620
6630
6640
6650
6660
6670
6680
6690
6700
6710
6720
6730
6740
6750
6760
6770
6780
6790
6800
6810
6820
6830
6840
6850
6860
6870
6880
6890
6900
6910
6920
6930
1015-P
7180
S45
(C090)
57-B
3052-P/W
(C099)
5
S46
(C091)
3052-P/W
3052-P/W
E2
57-B
X1
3060-P
C220-9
3030-W/R
3030-W/R
7140
C220-8
X5
3060-P
K
S47
(C187)
57-B
57-B
MF6
3060-P
X3
(C180)
2026-S/R
1240
2026-S/R
640
+30
+15
1013-R
1013-R
5260
1014-R/B
1014-R/B
5440
810-G/P
810-G/P
3160
X4
(C055)
50-G/R
50-G/R
5080
997-G/N
997-G/N
5480
49-G/W
49-G/W
5040
1019C-G
7040
E3
(C092)
138A-P
7200
1019K-G
7090
P1
(C108)
1013-R
5240
57-B
1019-G
6120
C223-10
138C-P
7190
C223-2
P2
(C228)
1013-R
5250
57-B
3090-Y/LN
3130
M7
(C138)

WITH CAB ELECTROSHIFT WITH EDC
WITH CAB DUAL COMMAND WITH EDC
WITH CAB DUAL COMMAND LESS EDC

Cab accessories continued

C225 Splice connector
F24 Fuse 24
KIV Remote valve relay
S49 Remote valve switch
Y13 Remote valve solenoid

WIRE COLOUR CODES							
B	Black	R	Red	LG	Light Green	K	Pink
N	Brown	O	Orange	U	Blue	W	White
LN	Light Brown	Y	Yellow	TQ	Turquoise		
S	Slate	G	Green	P	Purple		

Line 6940–7290

From Serial Number 086641B
TS 90, 100, 110. With cab Electroshift with EDC
With cab Dual Command with EDC
With cab Dual Command Less EDC

CAB ACCESSORIES (cont)
line 6940–7290

(21)

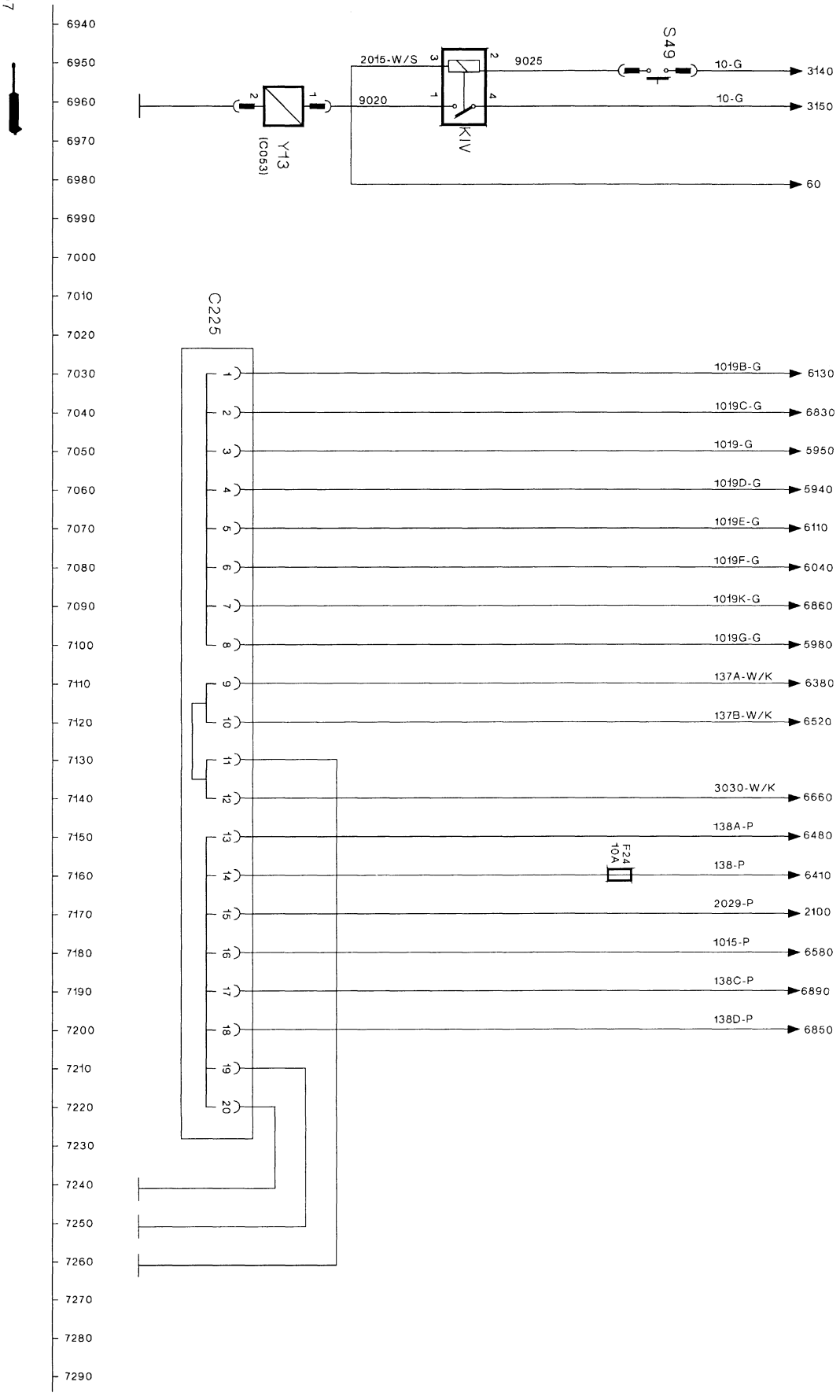
6940
6950
6960
6970
6980
6990
7000
7010
7020
7030
7040
7050
7060
7070
7080
7090
7100
7110
7120
7130
7140
7150
7160
7170
7180
7190
7200
7210
7220
7230
7240
7250
7260
7270
7280
7290
S49
2015-W/S
9025
10-G
3140
9020
10-G
3150
Y13
(C053)
K1V
60
C225
1019B-G
6130
1019C-G
6830
1019-G
5950
1019D-G
5940
1019E-G
6110
1019F-G
6040
1019K-G
6860
1019G-G
5980
137A-W/K
6380
137B-W/K
6520
3030-W/K
6660
138A-P
6480
F24
10A
138-P
6410
2029-P
2100
1015-P
6580
138C-P
6890
138D-P
6850
+30
+15

Line No	Description
10	STOP LAMP SWITCH FEED
12	MAIN BEAM HEADLAMP FUSE SUPPLY
13	DIP BEAM HEADLAMP FUSE SUPPLY
28	WIPER MOTOR (PARK RETURN)
29	MAIN FUEL SENDER SIGNAL
31	ENGINE OIL PRESSURE SENDER SIGNAL
39	TEMPERATURE GAUGE SIGNAL
44	FLASHER UNIT (49A)
49	RIGHT HAND TURN SIGNAL
50	LEFT HAND TURN SIGNAL
56	WIPER MOTOR- HIGH
57	EARTH (ALL)
58	WIPER MOTOR- LOW
71	IGNITION SWITCHED FEEDS (UNFUSED)
97	WINDSHIELD WASHER FEED
137	RADIO FEED
138	RADIO KAM
150	BATTERY FEED (ALL)
181	BLOWER MOTOR FEED
376	HORN FEED
587	WINDSHIELD WIPER INTERMITTENT DELAY
810	STOP LAMP
979	BLOWER MOTOR HIGH SPEED
980	THERMOSTAT SWITCH SUPPLY
984	TEMPERATURE CONTROL POT. INPUT
986	TEMPERATURE CONTROL POT. OUTPUT
989	BLOWER MOTOR MEDIUM SPEED
997	WORK LAMP- REAR FEED (OUTER)
998	WORK LAMP- REAR FEED (INNER)
999	BLOWER MOTOR LOW SPEED
1000	SAFETY START SWITCH SUPPLY
1001	STARTER SOLENOID FEED
1002	IMPLEMENT LAMP SWITCH SUPPLY
1003	SUPPLY TO GAUGES
1004	SUPPLY TO HORN AND HEADLAMP FLASH
1005	AIR CLEANER WARNING LAMP
1006	ALTERNATOR WARNING LAMP
1010	IGNITION RELAY
1011	SUPPLY TO FUSES
1013	RIGHT HAND LAMPS
1014	LEFT HAND LAMPS
1015	DOME LAMP SWITCH FEED
1018	AIR CONDITIONING CLUTCH
1019	WINDSHIELD WIPER FEED
1020	HAZARD SWITCH SUPPLY
1021	HAZARD SWITCH SUPPLY (BATTERY)
1022	THERMOSTART
1023	LIGHT SWITCH FEED
1024	RIGHT & LEFT HAND SIDE LAMP FEED
1026	HIGH BEAM INDICATOR LAMP

Line No	Description
1027	HEADLAMP MAIN BEAM
1031	INSTRUMENT ILLUMINATION
1033	TURN SIGNAL WARNING LAMP (TERM C2)
1034	TURN SIGNAL WARNING LAMP (TERM C3)
1035	ENGINE OIL PRESSURE WARNING LAMP
1072	WORKLAMP FRONT RELAY SUPPLY
1090	REAR WORKLAMP RELAY SIGNAL
1092	FRONT WORKLAMP RELAY SIGNAL
1096	WORKLAMP FENDER MOUNTED
1097	FEED FRONT WORKLAMP OUTER
1099	FEED FRONT WORKLAMP INNER
1119	R, R, WINDSHIELD WIPER
1120	R, R, WINDSHIELD WIPER PARK RETURN
1121	R, R, WINDSHIELD WASH
1500	
2012	TRANS. OIL PRESSURE WARNING LAMP
2014	ENGINE OIL PRESSURE SENDER
2015	TACHOMETER SENSOR- SIGNAL
2016	REAR AXLE SPEED SENSOR- SIGNAL
2025	AUDIO ALARM CONTROL
2026	IMPLEMENT SWITCH SIGNAL
2027	RADAR ASSEMBLY (GUN) POWER
2028	RADAR ASSEMBLY (GUN) SIGNAL
2029	INSTRUMENT MEMORY SUPPLY
2041	FUEL SHUT OFF
2042	PTO SOLENOID- REAR
2045	PTO SWITCH TO MODULE
2049	PTO SWITCH 1000RPM WARNING LAMP
2050	PTO SUPPLY
2060	PTO 540/1000 SWITCH
2065	PTO ENGAGED
2070	ENGINE SHUT OFF RELAY +12V
2080	ENGINE SHUT OFF RELAY
2095	INSTRUMENT SIGNAL GROUND
2200	SERVICE MODE INITIATE
3000	FLASHER UNIT SUPPLY
3001	LEFT HAND FLASHER CIRCUIT
3002	RIGHT HAND FLASHER CIRCUIT
3014	HAND BRAKE WARNING LAMP SIGNAL
3020	DUAL POWER SOLENOID SUPPLY
3025	FOUR WHEEL DRIVE SOLENOID
3030	ACCESSORY RELAY SIGNAL
3052	DOME LAMP TO DOOR SWITCH
3060	IMPLEMENT SOCKET RELAY
3070	'B' PILLAR SKT SUPPLY
3090	SEAT PUMP SUPPLY
4001	TRANSMISSION OIL WARNING LAMP (TEMP.)
4011	ROTATING BEACON SWITCH SUPPLY
4012	ROTATING BEACON FEED
4101	TRANS. RANGE ENABLE

Line No	Description
5000	EDC MEMORY POWER
5010	EDC EARTH
5011	EDC EARTH CASE RFI
5020	EDC PROC +5V REF VOLTAGE DROP PSN/RATE
5021	EDC PROCESSOR REF VOLT (+5V) ROCKER SHAFT
5030	EDC RAISE SIGNAL
5035	EDC RETURN REF. VOLTAGE EARTH
5040	EDC DRAFT POSITION
5045	EDC DROP RATE
5050	EDC QUADRANT
5060	SERIAL DATA TO CLUSTER
5065	EDC RIGHT PIN
5070	EDC LEFT PIN
5075	EDC VOLTAGE TO PINS
5080	EDC ROCKER SHAFT
5085	EDC VALVE UP
5087	EDC VALVE UP RETURN
5090	EDC VALVE DOWN
5095	EDC EXTERNAL SWITCH DOWN
5097	EDC VALVE DOWN RETURN
5100	EDC EXTERNAL SWITCH UP
5110	EDC LAMP SIGNAL
5120	EDC HEIGHT LIMIT SIGNAL
5125	EDC RAISE SIGNAL- RAISE WORK SWITCH
5130	EDC WORK SIGNAL- RAISE WORK SWITCH
5145	EDC SLIP LIMIT POT
5150	EDC EXTERNAL SWITCH SUPPLY
5170	SERIAL DATA FORM CLUSTER
5180	EDC SLIP INDICATOR LAMP
5200	EDC VALVE SUPPLY
5300	ECU FLASH PROGRAM SIGNAL
7000	TRANS. CONTROL SUPPLY
7002	TRANS. MAIN CLUTCH SOL (C3/C4)
7004	TRANS. FRONT CLUTCH SOL (C1/C2)
7005	TRANS. CREEPER GR SOL
7010	TRANS. RANGE INDICATOR SWITCH (GR 1- 4)
7020	TRANS. RANGE INDICATOR SWITCH (GR 5- 8)
7070	TRANS. FEED
7080	DIFF- LOCK SOLENOID FEED
7120	DIFF- LOCK WNG LP
7130	HYD FILTER WNG LP
7160	HYD LOW CHARGE WARNING
7170	DIFF LOCK SWITCH OUTPUT
7195	TRANS. SOLENOID VALVE RETURN
7200	TRANSMISSION SHIFT DOWN
7210	TRANSMISSION SHIFT UP
7220	TRANSMISSION HIGH RANGE
7230	TRANSMISSION LOW RANGE
7430	CLUTCH POSITION SIGNAL
7500	TRANS. OIL TEMP. SENSOR

Line No	Description
7590	TRANS. CREEPER GEAR STATUS LAMP
7640	DIAGNOSTIC PLUG SERIAL232 IN
7650	DIAGNOSTIC PLUG SERIAL232 OUT
7660	TRANS. CLUTCH DISCONNECT
7700	TRANS. SHUTTLE DUMP SWITCH
7710	TRANS. OIL TEMPERATURE SWITCH
7810	TRANS. PWM SOLENOID C1
7815	TRANS. PWM SOLENOID C1 RETURN
7820	TRANS. PWM SOLENOID C2
7825	TRANS. PWM SOLENOID C2 RETURN
7830	TRANS. PWM SOLENOID C3
7835	TRANS. PWM SOLENOID C3 RETURN
7840	TRANS. PWM SOLENOID C4
7845	TRANS. PWM SOLENOID C4 RETURN
9020	HYDRAULIC REMOTE VALVE SOL

INDEX

Alternator component tests 3-82
Alternator operation 3-75
Alternator overhaul and component testing . 3-83
Analogue instrument cluster 3-57
Analogue electronic instrument cluster 3-49
Battery 3-91
Battery maintenance and tests 3-39
Bench tests 3-70
Cab controls 3-8
Central display 3-26
Charging or welding 3-16
Charging system 3-73
Charging system, system testing 3-77
Diagnostic 'H' routines 3-179
Diagnostic memory 3-46
Electrical component testing 3-131
Electrical introduction 3-2
Electrical system and fuses 3-3
Electronic instrument cluster 3-23
Error codes 3-35
Fault code chart 3-35
Function keys 3-33
Harnesses and connectors 3-99
Indicator and warning lamps 3-24, 3-50, 3-58
Instrument panel byte levels 3-47
LCD displays 3-52
Main tachometer 3-51
Micro processors 3-7
Specifications 3-2
Starter motor removal and installation 3-67
Starter system testing on tractor 3-65
Starting system 3-61
Switch removal and replacement 3-17
Tractor condition bar graphs 3-25
Tractor condition gauges 3-51
Tractor performance monitor setup 3-30
Welding or charging 3-16
Wiring diagrams 3-225

Wiring Diagrams
(Power Shuttle and with cab models from Serial no. 139307B)

CONTENTS

Description	Page
Wiring diagram circuit descriptions (All Models)	1
How to use the linear wiring diagrams	2
Symbols	4
Component identification and wiring diagram location key	5
Wiring Diagrams:	
Electroshift Transmission, With Cab	11
Electroshift Transmission, Less Cab	51
Dual Command Transmission, With Cab	91
Synchro Command Transmission, With Cab	131
Wire identification key	171
System Diagrams	183

Wiring Diagrams Circuit Description - All Models		Line Reference Range
Circuit 1	Starting, Charging, Thermostart, Fuel Injection Pump	0-390
Circuit 2	Transmission Circuits	400-1590
Circuit 3	Electronic Draft Control	1600-2790
Circuit 4	Four Wheel Drive and Differential Lock	2800-3190
Circuit 5	Power Take Off	3200-3590
Circuit 6	Cab Accessories	3600-4390
Circuit 7	Main Lamps, Indicators & Hazards	4400-5190
Circuit 8	Work Lamps	5200-5990
Circuit 9	Sensors / Senders	6000-6390
Circuit 10	Wipers & Washers	6400-6790
Circuit 11	Processor Feed and Ground connections	6800-7190
Circuit 12	Air-Conditioning & Heating	7200-7590

HOW TO USE THE LINEAR WIRING DIAGRAMS

The wiring diagrams have been drawn in a linear style. This means that the complete wiring diagram has been drawn over a number of pages but if joined together would make a complete diagram.

There are a number of guides to help assist in reading and understanding the wiring diagrams.

1. The wiring diagrams (1) are located at the top of each page. The title and key (2) are located below the diagram and the wire colour code table (3) is located below the key.

   The title under the diagram details the models of the range that are applicable, the model configuration, ie, transmission type, with or less cab and the serial number of the tractor to which the diagrams apply. The key then details all the components used within that particular page.

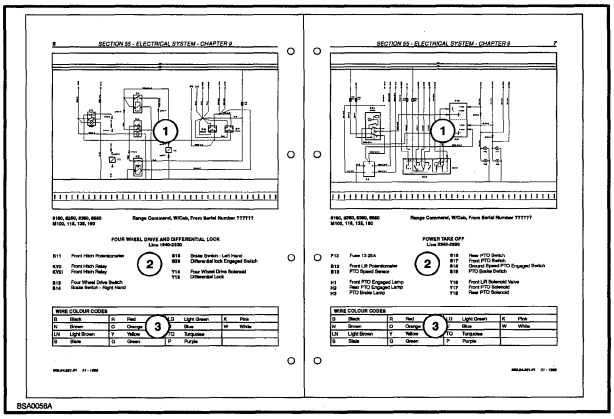

1

2. Every component and connector has its own unique reference number.

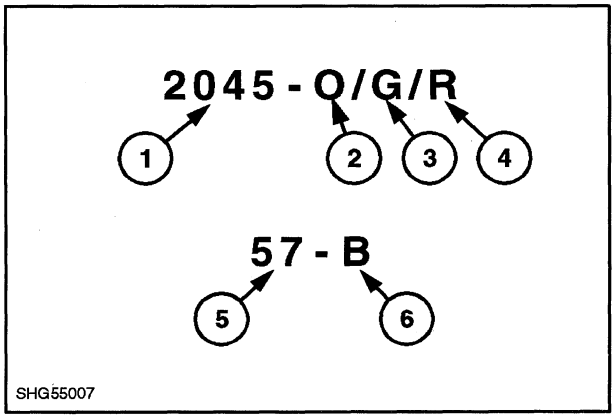

2

3. Every wire has a code assigned to it (1) this code refers to its function, the code is not marked on the actual wire. A key of all wire codes can be found at the rear of this section. Letters (2), (3) and (4) indicate the wire colour. The first letter (2) indicates the main wire colour. The second letter (3) indicates tracer wire colour, the third letter (4) indicates the band colour, for example wire reference (5) and number 57 is an earth wire, letter (6) B indicates its a solid black wire.

4. Each component and connector pin appears only once in the electrical drawings and has its own location point on the page.

5. The wiring diagrams are drawn in sections. However where a single component is used in a number of circuits such as a processor or multi function switch, it is drawn either on its own or on the circuit which it influences the most.

6. The wiring is drawn between four lines three across the top of the page and one at the bottom of the page.

   The two upper most lines (1) marked +30A and +30B are the constant live lines.
   Below the +30 line is the +15 (2) which is the ignition key on live line.
   The lowest line (4) is the ground/earth line.
   On the lower part of the page (3) a line is marked with numbers increasing by ten (10-20-30, etc.). This is the line used to reference wires and components.

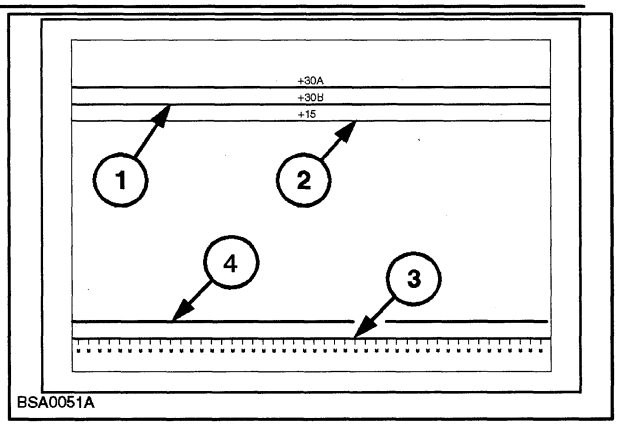

3

Example

Figures 4 and 5 show a basic circuit drawn over two pages.

Power comes in from the ignition on live line +15 through fuse F3, which is located at point 230.

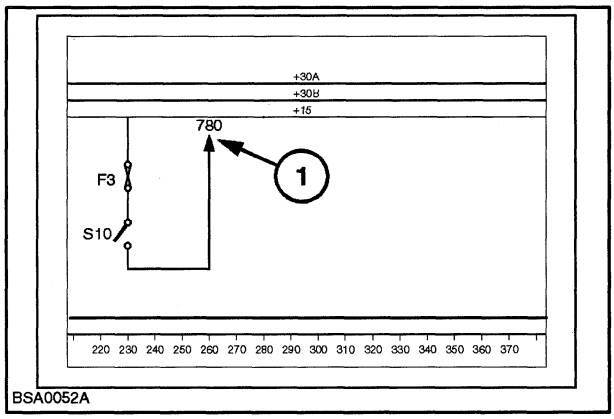

4

Power comes to switch S10. If the switch is operated, power continues up and stops with an arrow (1) and a number. The arrow indicates the wire continuing to another page. The Number 780 refers to the line reference where it appears on a new page. Note the line reference directly below the wire being traced ie. 260. Following the line reference until 780 is found. Using either the index or following the page reference line. When 780 is located on the reference line the number 260 will be observed at the top of the page. Note the arrow points back to the previous part of the circuit. From this point follow the wire down to solenoid 'Y3'. The diagram now indicates that power goes to ground.

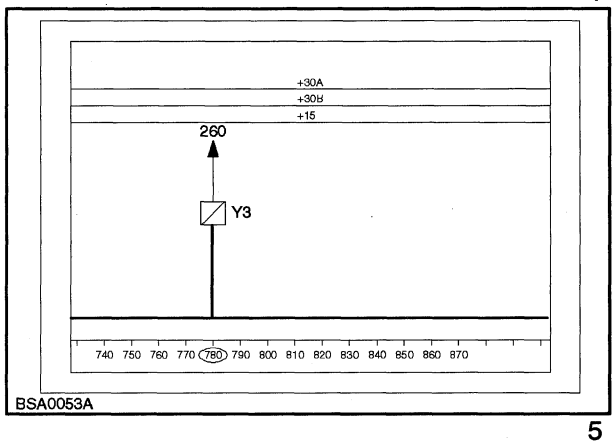

5

Where a circuit originates or terminates at a processor, ie, Transmission processor, EDC processor, Electronic Management Unit or Instrument cluster, the wire in the diagram is ended with a small circle and a connector reference number. A white circle (1) indicates a processor, a black circle (2) indicates an instrument cluster.

The diagrams have been constructed to ensure the minimum number of pin-outs, detailed above, are used. Due to this, many diagrams have been spread across 2 sheets and it will be necessary to follow from one page across to the next to complete a circuit.

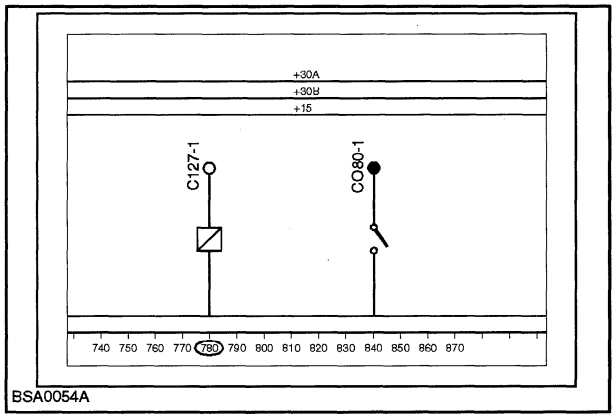

6

Symbols

Fuse	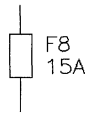	Horn	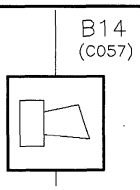
Relay	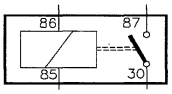	Diode	
Motor	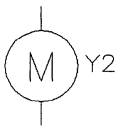	Switch	
Earth/ground point	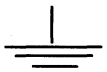	Resistor	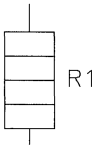
Sensor	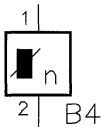	Electro-Valve/solenoid	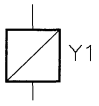
Potentiometer	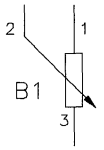	Temperature Switch	
Lamp	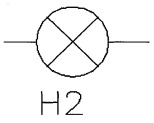	Pressure Switch	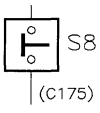
Speaker	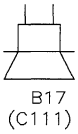	Processor	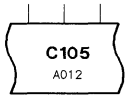
Connector pin	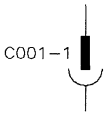		

SYMBOL	DRAWING LOCATION	DESCRIPTION
(A) PROCESSORS, MODULES AND PANELS		
A001	7140	Transmission And EDC Processor
A002	1080	Gear Shift Display Module
A003	1740	EDC Panel
A004	4320	Radio
A005	6810	Diagnostic Connector
A006	4540	External Buzzer Unit
A007	7020	Instrument Cluster A (C079)
A008	7020	Instrument Cluster B (C080)
A009	7000	Instrument Cluster C (C081)
(B) SENSORS, SENDERS AND POTENTIOMETERS		
B1	6280	Engine Oil Pressure Sensor
B2	6210	Engine Coolant Temperature Sensor
B3	6320	Fuel Tank Sender
B4	6370	Radar
B5	2160	Axle Speed Sensor
B6	1740	Height Limit Potentiometer
B7	1740	Slip Limit Potentiometer
B8	1740	Drop Rate Potentiometer
B9	1740	Draft/Position Potentiometer
B10	2310	Rocker Shaft Potentiometer
B11	1930	Quadrant Lever Potentiometer
B12	2160	Draft Pin Left
B13	2310	Draft Pin Right
B14	7520	Temperature Control Potentiometer
B15	4350	Speaker
B16	4290	Speaker
B17	3620	Horn
B18	1550	Clutch Pedal Potentiometer
B19	1480	Synchroniser Position Potentiometer
(C) SPECIAL CONNECTORS		
C226	3100	Four Wheel Drive Braking Connector (Synchro Command Only)
(E) MISCELLANEOUS		
E1	7400	Air Conditioning Compressor Clutch
E2	4170	Interior Light
E3	3750	Console Light
(F) FUSES		
F1	4590	Head Lamp Main 15A
F2	4600	Head Lamp Dip 15A
F3	5020	Side Lamp RH 15A
F4	5150	Side Lamp LH 15A
F5	5870	Work Lamp Front Low 10A
F6	5370	Work Lamp Rear Fender 15A

SYMBOL	DRAWING LOCATION	DESCRIPTION
F7	5490	Work Lamp Front And Rear Cab Roof 20A
F8	240	Fuel Shut Off Solenoid 10A
F9	2570	Gauges And External Switches 10A
F10	4440	Hazard Lights 15A
F11	4570	Horn, Flashers, Cigar Lighter, Roof Beacon. 30A
F12	2450	EDC 10A
F13	540	Transmission Solenoids 15A
F14	7130	EDC 10A
F15	3050	Stop Lamps, 4wd, Diff. Lock 15A
F16	7230	Air Conditioning Heater Fan 25A
F17	6510	Wiper Washer, Front Wiper, Rear Wiper Console Lamp 20A
F18	4430	Turn Indicators 10A
F19	320	Thermostart 25A
F20	350	Processor 'keep Alive Memory' (KAM) 5A
F21	3220	PTO 5A
F22	4070	Radio, Implement Socket Switch And Relay 5A
F23	4080	Accessories, Interior Lamp, Radio KAM, EIC Buzzer. 20A
F24	4100	Interior Light 10A
FL1	20	Fuse Link
FL2	110	Fuse Link

(H) LAMP AND LIGHTS

H1	3520	PTO Lamp
H2	1740	EDC Status Lamp
H3	1740	Slip Lamp
H4	1740	Raise Lamp
H5	1740	Lower Lamp
H6	5130	Front Indicator Lamp LH ISO
H7	5170	Front Indicator Lamp RH ISO
H8	4820	Rear Indicator Lamp LH ISO
H9	4820	Rear Indicator Lamp RH ISO
H10	5090	Front Indicator Lamp LH NASO
H11	4740	Front Indicator Lamp RH NASO
H12	5100	Rear Indicator Lamp LH NASO
H13	4750	Rear Indicator Lamp RH NASO
H14	4890	Head Lamp LH
H15	4920	Head Lamp RH
H16	5130	Front Side Lamp LH
H17	5170	Front Side Lamp RH
H18	4820	Rear Brake/Tail Lamp LH
H19	4820	Rear Brake/Tail Lamp RH
H20	5420	Licence Plate Light Top RH
H21	5390	Licence Plate Light Top LH
H22	5010	Licence Plate Lamp Lower
H23	5750	Upper Front Work Lamp LH

SYMBOL	DRAWING LOCATION	DESCRIPTION
H24	5810	Upper Front Work Lamp RH
H25	5730	Lower Front Work Lamp LH
H26	5790	Lower Front Work Lamp RH
H27	5380	Upper Rear Work Lamp LH
H28	5410	Upper Rear Work Lamp RH
H29	5490	Lower Rear Work Lamp LH
H30	5520	Lower Rear Work Lamp RH
H31	5300	Licence Plate Lamp L/Cab
(G) CHARGING		
G1	10	Battery
G2	70	Alternator
(K) RELAYS		
K	3870	Implement Socket Relay
K1	80	Ignition Relay
K2	140	Starter Relay
K3	4460	Flasher Unit Relay
KXI+XII	4690	Flasher Mode Relay
KA	2930	Diff Lock Relay (12x12 Only)
KB	5880	Front Work Lamp Relay
KC	5380	Rear Work Lamp Relay
KD	5710	Lower Front Work Lamp Relay
KE	5500	Lower Rear Work Lamp Relay
KF	230	Engine Shut Down Relay
KG	2930	Diff Lock Relay (12x12 Only)
KV+VI	3400	PTO Relay
KII	470	Accessory Socket Relay
KIV	3780	Remote Valve Relay
KVII	310	Thermostart Relay
KVIII	8540	Intermittent Front Wiper Relay
KIX	8700	Intermittent Rear Wiper Relay
KX	4650	Multi-function Switch Unload Relay
(M) MOTORS		
M1	40	Starter Motor
M2	6540	Front Wiper Motor
M3	6760	Rear Wiper Motor
M4	6560	Washer Motor
M5	6640	Washer Motor
M6	7340	Blower Motor
M7	5960	Air Seat

SYMBOL	DRAWING LOCATION	DESCRIPTION
(MF) MAXI FUSE		
MF1	50	To Ignition Relay And Supply To Fuse 9/14/15/16/17/18/21.
MF2	260	To Ignition Switch And Supplying Fuses 8/10/11/12/13/20/22. And Thermostart Module Fuse 19
MF3	4590	Turn Switch And Supplying Fuses 1/2/3/4.
MF4	5870	Work Lamps Fuses 5/6/7.
MF5	4080	Accessories Fuses 23/24.
MF6	3910	40 Amp. Implement Socket.
(P) CLOCKS		
P2	4260	Clock
(R) RESISTORS		
R1	320	Thermostart Coil
R2	250	Fuel Injection Pump Wax Motor
R3	7290	Blower Speed Resistor
R4	4030	Cigar Lighter
R5	7340	Blower Speed Resistor
(S) SWITCHES		
S1	300	Ignition Switch
S2	170	Start Inhibitor Switch
S3	6240	Engine Oil Pressure Switch
S4	6130	Low Charge Pressure Switch (CCLS)
S5	6090	Hydraulic Oil Temp. Switch
S6	6070	Hydraulic Filter Blocked Switch
S7	6170	Steering Pressure Switch
S8	6190	Transmission Pressure Switch
S9	6070	Transmission Oil Temperature Switch
S10	6040	Hand Brake Switch
S11	6010	Brake Fluid Level Switch
S12	6150	Air Filter Vacuum Switch
S13	2850	FWD Switch
S14	2930	Differential Lock Switch
S15	2990	Differential Lock Engagement Light Switch
S16	3120	Brake Switch Right Hand
S17	3120	Brake Switch Left Hand
S18	3310	PTO Switch
S19	3460	Seat Switch
S20	3260	540/1000 PTO Speed Switch
S21	670	Clutch Pedal Switch
S22	460	Creeper Switch
S23	910	Shuttle Dump Switch
S24	870	Up Shift Switch
S25	890	Down Shift Switch
S26	930	High Range Switch

SYMBOL	DRAWING LOCATION	DESCRIPTION
S27	950	Low Range Switch
S28	970	1-4 Range Switch(16x16) / Hi-med Sw. (24x24)
S29	990	5-8 Range Switch
S30	2530	Raise Work Switch
S31	2610	Fender Switch Left
S32	2650	Fender Switch Right
S33	4600	Indicator Switch
S34	4460	Hazard Switch
S36	5860	Front Upper Lamp Switch
S37	5650	Front Lower Lamp Switch
S38	5380	Rear Lamp Switch
S39	6460	Front Wiper And Washer Switch
S40	6700	Rear Wiper And Washer Switch
S41	7400	Air Con High Low Pressure Switch
S42	7400	Air Con Low Pressure Cut Out Switch
S43	7530	Air Con Temp. Exchange Control Switch
S44	7270	Blower Speed Switch
S45	4150	Interior Light Door Switch
S46	4200	Interior Light Door Switch
S47	3870	40 Amp. Terminal And External 40 Amp. 4 Pin Power Switch
S48	3670	Beacon Switch
S49	3780	Remote Valve Switch
S50	760	Transmission Oil Pressure Switch
S51	950	1st / 2nd Switch
S52	990	3rd / 4th Switch
S53	250	Thermo Switch For Wax Motor
S57	610	Forward/Reverse Shuttle Lever
(X) POWER SOCKETS		
Xi	3850	40 Amp. Screw Terminal
X2	4120	Accessory Socket
X3	3960	Implement Status Socket
X4	4970	Trailer Socket
X5	3890	Four Pin 40 Amp. Socket
X6	3670	Roof Beacon Socket LH
X7	3710	Roof Beacon Socket RH
(Y) SOLENOID VALVES		
Y1	210	Fuel Shut Off Solenoid
Y2	280	Electric Fuel Pump
Y3	2880	Fwd Solenoid
Y4	2970	Differential Lock Solenoid
Y5	3500	PTO Solenoid
Y6	1370	Creeper Solenoid
Y7	1220	PWM Valve 1
Y8	1250	PWM Valve 2
Y9	1280	PWM Valve 3
Y10	1310	PWM Valve 4
Y11	1940	Raise Solenoid EDC Valve

SYMBOL	DRAWING LOCATION	DESCRIPTION
Y12	1940	Lower Solenoid EDC Valve
Y13	3790	Remote Valve Solenoid
Y14	1250	Dump Solenoid
Y15	1280	Lo - PWM
Y16	1310	Hi - PWM
Y18	1410	Forward PWM
Y19	1440	Reverse PWM

WIRING DIAGRAMS:

TS SERIES: Electroshift Transmission, (16x16 with Power Shuttle) W/Cab,

Wiring Diagrams Circuit	Description	Line Reference Range
Circuit 1	Starting, Charging, Thermostart, Fuel Injection Pump	0-390
Circuit 2	Transmission Circuits	400-1590
Circuit 3	Electronic Draft Control	1600-2790
Circuit 4	Four Wheel Drive and Differential Lock	2800-3190
Circuit 5	Power Take Off	3200-3590
Circuit 6	Cab Accessories	3600-4390
Circuit 7	Main Lamps, Indicators & Hazards	4400-5190
Circuit 8	Work Lamps	5200-5990
Circuit 9	Sensors / Senders	6000-6390
Circuit 10	Wipers & Washers	6400-6790
Circuit 11	Processor Feed and Ground connections	6800-7190
Circuit 12	Air-Conditioning & Heating	7200-7590

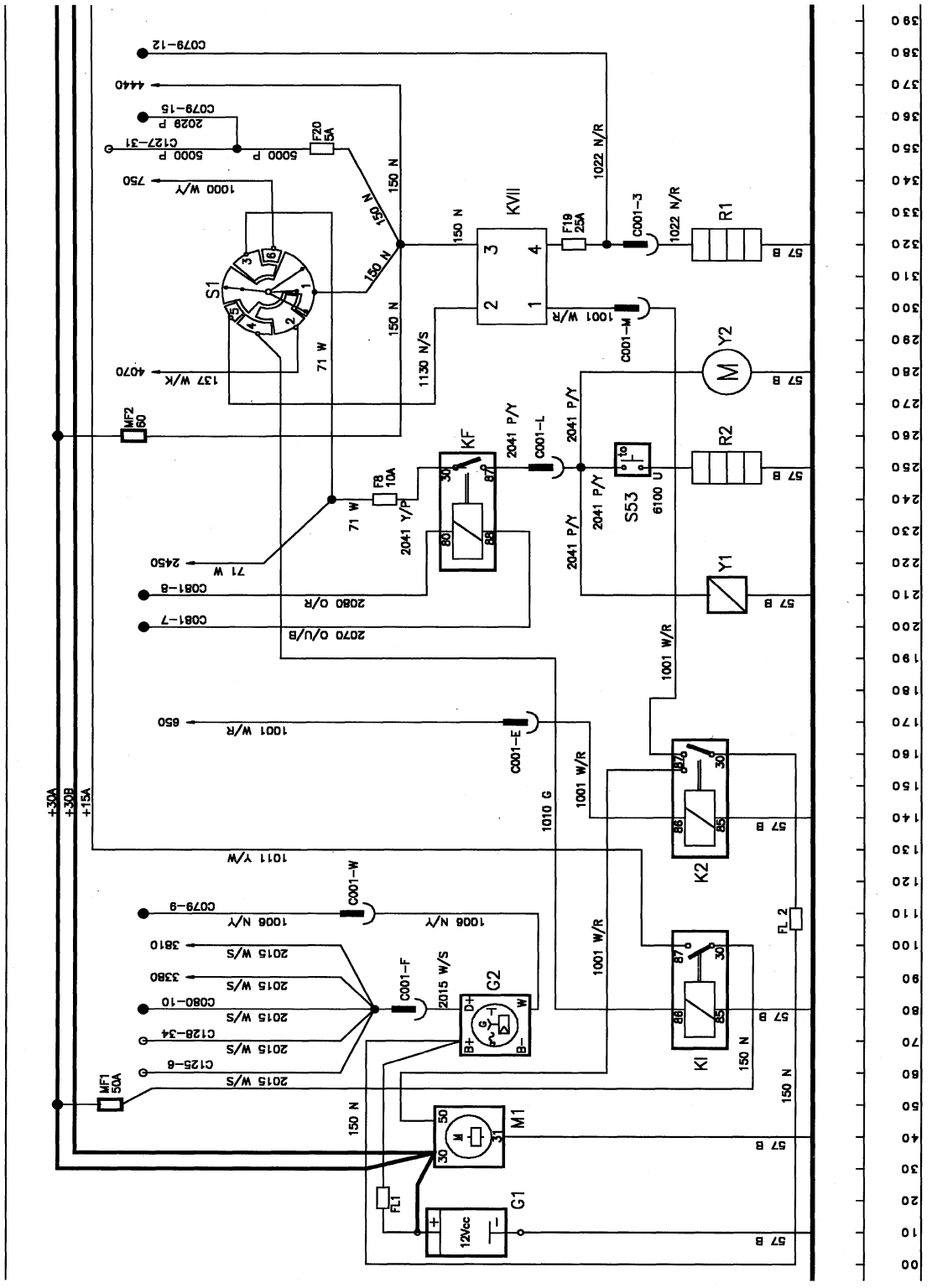
C079-12
4440
C079-15
2029 P
C127-31
5000 P
F20 5A
750
1000 W/Y
S1
150 N
KVII
F19 25A
1022 N/R
C001-3
R1
57 B
1001 W/R
C001-M
Y2
4070
137 W/K
71 W
1130 N/S
MF2 60
KF
2041 P/Y
C001-L
R2
F8 10A
2041 Y/P
S53
6100 U
2450
C081-8
2080 O/R
C081-7
2070 O/U/B
Y1
1001 W/R
650
C001-E
1010 G
+30A
+30B
+15A
1011 Y/W
K2
C001-W
C079-9
1008 N/Y
3810
2015 W/S
3380
C080-10
C001-F
G2
C128-34
C125-6
MF1 50A
K1
FL 2
M1
FL1
G1
12Vcc

STARTING, CHARGING, THERMOSTART, FUEL INJECTION PUMP
line 0-390

STARTING

FL1 Fuse Link
FL2 Fuse Link
G1 Battery
K1 Ignition Relay
K2 Start Relay
M1 Starter Motor and Solenoid
S1 Ignition Switch

CHARGING

G2 Alternator

THERMOSTART AND FUEL SYSTEM

F8 10A, Shut off Solenoid Fuse
F19 25A Fuse
KVII Thermostart relay
KF Fuel Shut Off Relay
R1 Thermostart coil
R2 Fuel Injection Pump Wax Motor
S53 Thermostatic Switch
Y1 Shut Off Solenoid
Y2 Electric Lift Pump

MF1 Maxi Fuse 1 50A
MF2 Maxi Fuse 2 60A
F20 5A, Processor 'Keep alive memory' Fuse

WIRE COLOUR CODES							
B	Black	R	Red	LG	Light Green	K	Pink
N	Brown	O	Orange	U	Blue	W	White
LN	Light Brown	Y	Yellow	TQ	Turquoise		
S	Slate	G	Green	P	Purple		

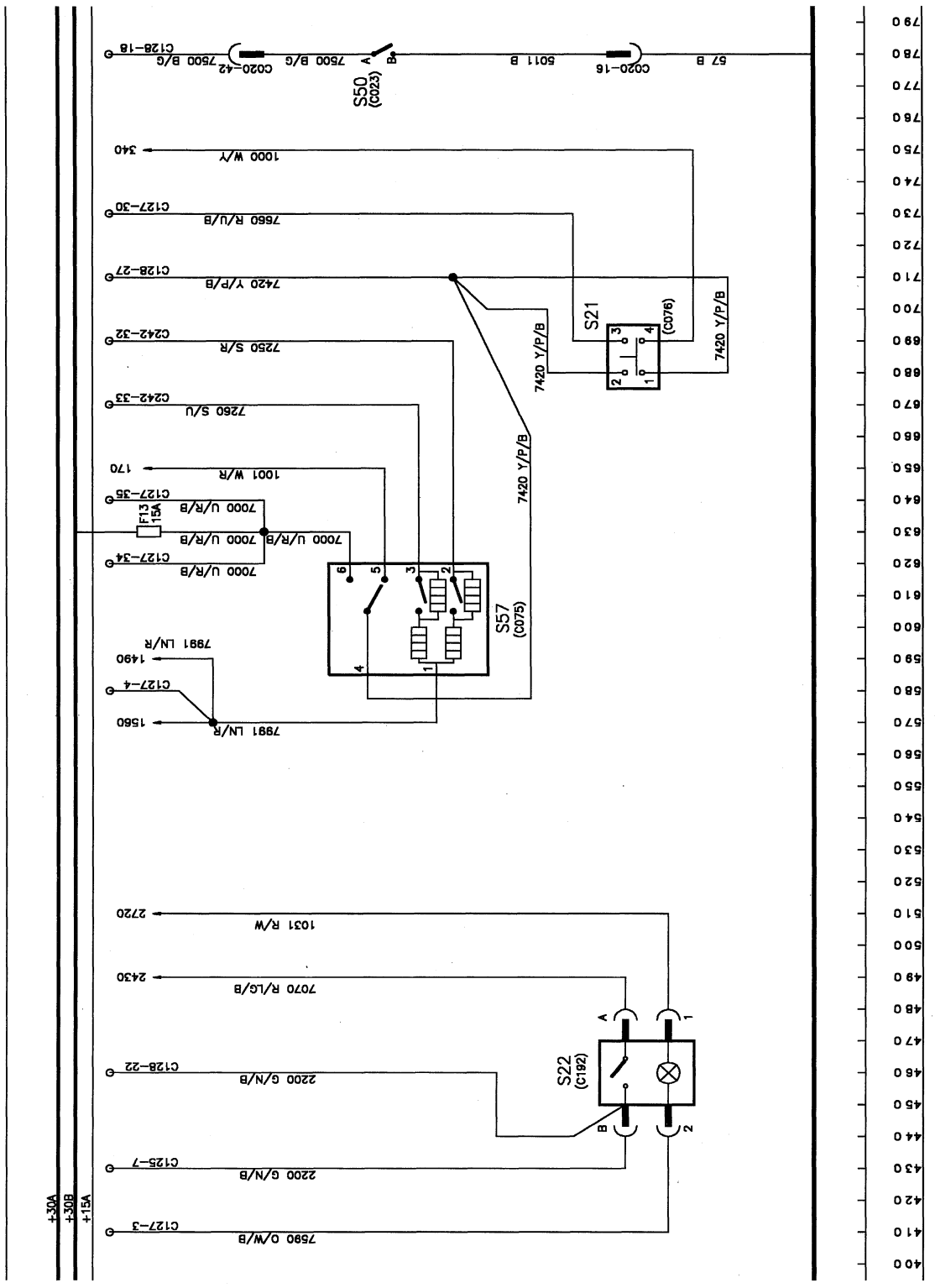
S50
(C023)
S21
(C076)
S57
(C075)
S22
(C192)
F13
15A
+30A
+30B
+15A

TRANSMISSION SYSTEM
Line 400-790

F13 15A, Transmission Fuse

S21 Clutch Pedal Switch
S22 Creeper Switch
S50 Transmision Oil Temperature Switch
S57 Forward/Reverse Shuttle Lever

WIRE COLOUR CODES							
B	Black	R	Red	LG	Light Green	K	Pink
N	Brown	O	Orange	U	Blue	W	White
LN	Light Brown	Y	Yellow	TQ	Turquoise		
S	Slate	G	Green	P	Purple		

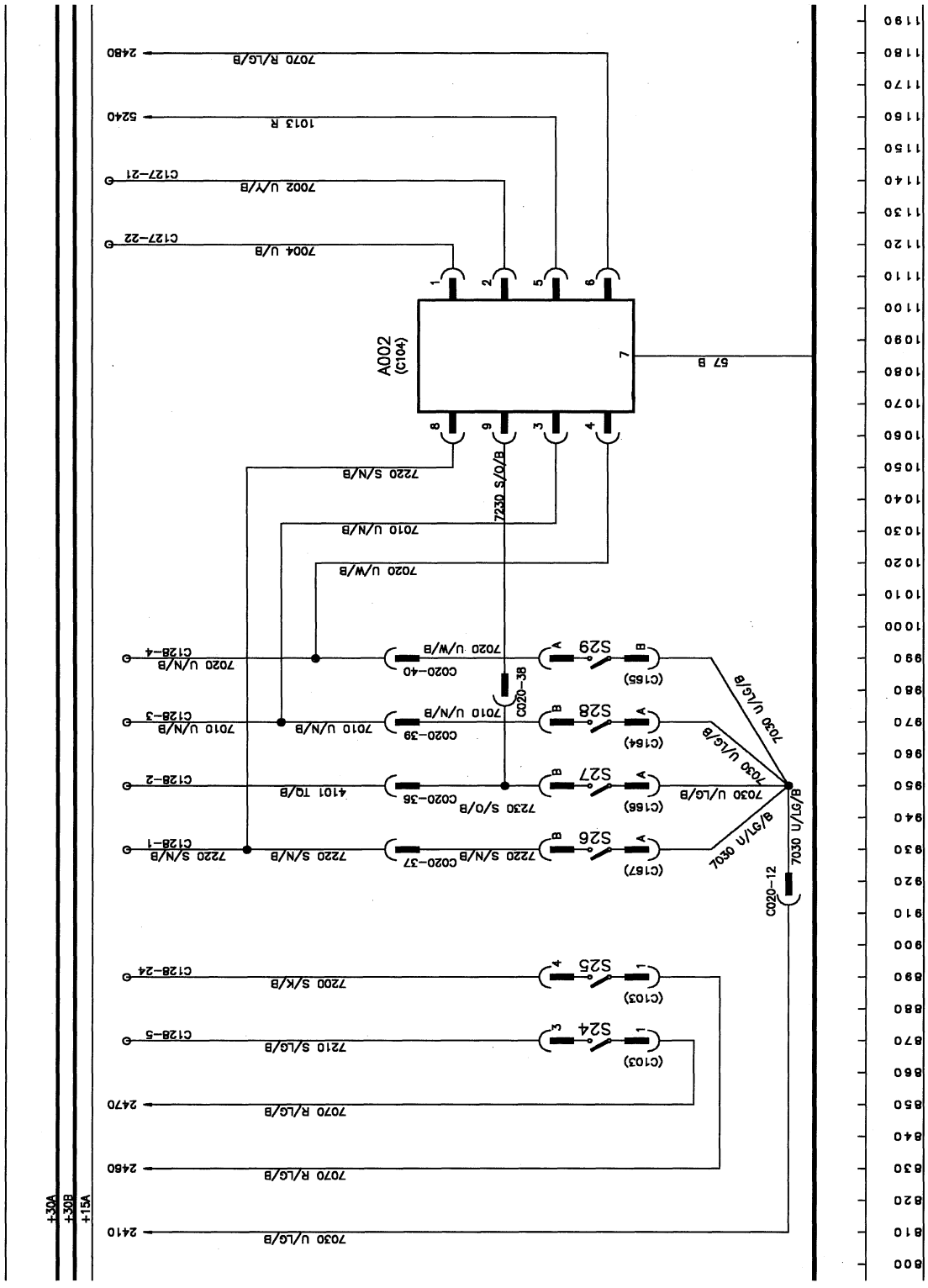
+30A
+30B
+15A
2480
7070 R/LG/B
5240
1013 R
C127-21
7002 U/Y/B
C127-22
7004 U/B
A002
(C104)
57 B
7220 S/N/B
7230 S/O/B
7010 U/N/B
7020 U/W/B
S29
S28
S27
S26
(C165)
(C164)
(C166)
(C167)
C020-40
C020-39
C020-38
C020-37
C020-36
C020-12
C128-4
C128-3
C128-2
C128-1
4101 TG/B
7030 U/LG/B
7030 U/LG/B
7030 U/LG/B
7030 U/LG/B
S25
S24
(C103)
(C103)
C128-24
C128-5
7200 S/K/B
7210 S/LG/B
2470
2460
2410
7070 R/LG/B
7070 R/LG/B
7030 U/LG/B

TRANSMISSION SYSTEM
Line 800-1190

A002 Gear Display Module

S24 Upshift switch
S25 Downshift switch
S26 High range switch
S27 Low range switch
S28 1-4 range switch
S29 5-8 range switch

WIRE COLOUR CODES							
B	Black	R	Red	LG	Light Green	K	Pink
N	Brown	O	Orange	U	Blue	W	White
LN	Light Brown	Y	Yellow	TQ	Turquoise		
S	Slate	G	Green	P	Purple		

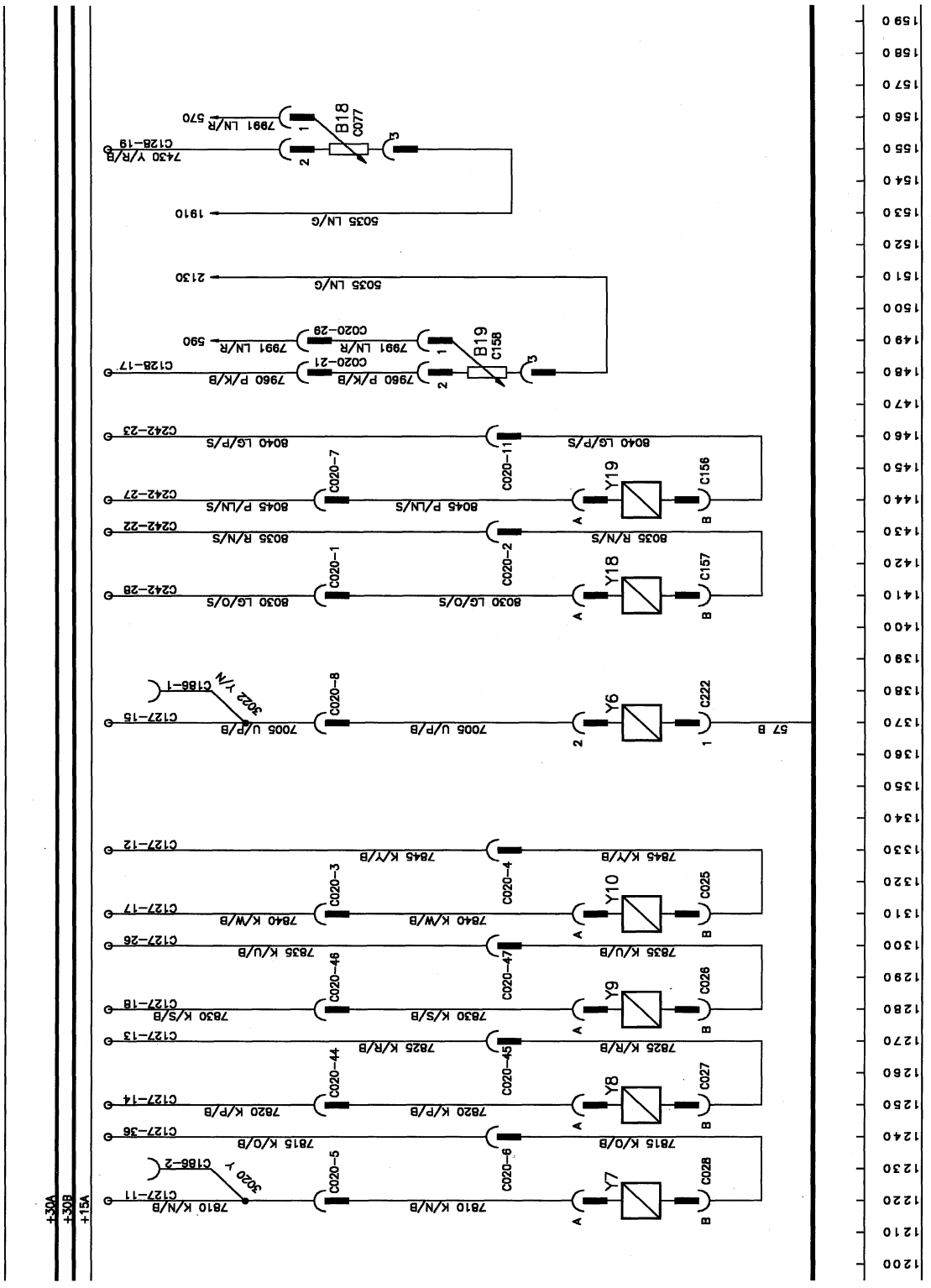
+30A
+30B
+15A
B18
C077
B19
C158
Y19
Y18
Y6
Y10
Y9
Y8
Y7
C156
C157
C222
C025
C026
C027
C028
C020-1
C020-2
C020-3
C020-4
C020-5
C020-6
C020-7
C020-8
C020-11
C020-28
C020-21
C020-46
C020-47
C020-44
C020-45
C128-19
C128-17
C127-15
C127-12
C127-17
C127-26
C127-18
C127-13
C127-14
C127-36
C127-11
C242-23
C242-27
C242-22
C242-28
C186-1
C186-2
3022 Y/N
3020 Y
1910
2130
570
590
57 B
7991 LN/R
7430 Y/R/B
5035 LN/G
7960 P/K/B
8040 LG/P/S
8045 P/LN/S
8035 R/N/S
8030 LG/O/S
7005 U/P/B
7845 K/Y/B
7840 K/W/B
7835 K/U/B
7830 K/S/B
7825 K/R/B
7820 K/P/B
7815 K/O/B
7810 K/N/B
1200
1210
1220
1230
1240
1250
1260
1270
1280
1290
1300
1310
1320
1330
1340
1350
1360
1370
1380
1400
1410
1420
1430
1440
1450
1460
1480
1500
1510
1520
1530
1540
1550
1560
1570
1580
1590

TRANSMISSION SYSTEM
Line 1200-1590

B18 Clutch pedal potentiometer
B19 Forward/reverse synchroniser potentiometer

Y6 Creeper solenoid
Y7 PWM Valve 1
Y8 PWM Valve 2
Y9 PWM Valve 3
Y10 PWM Valve 4
Y18 PWM Valve Forward
Y19 PWM Valve Reverse

WIRE COLOUR CODES							
B	Black	R	Red	LG	Light Green	K	Pink
N	Brown	O	Orange	U	Blue	W	White
LN	Light Brown	Y	Yellow	TQ	Turquoise		
S	Slate	G	Green	P	Purple		

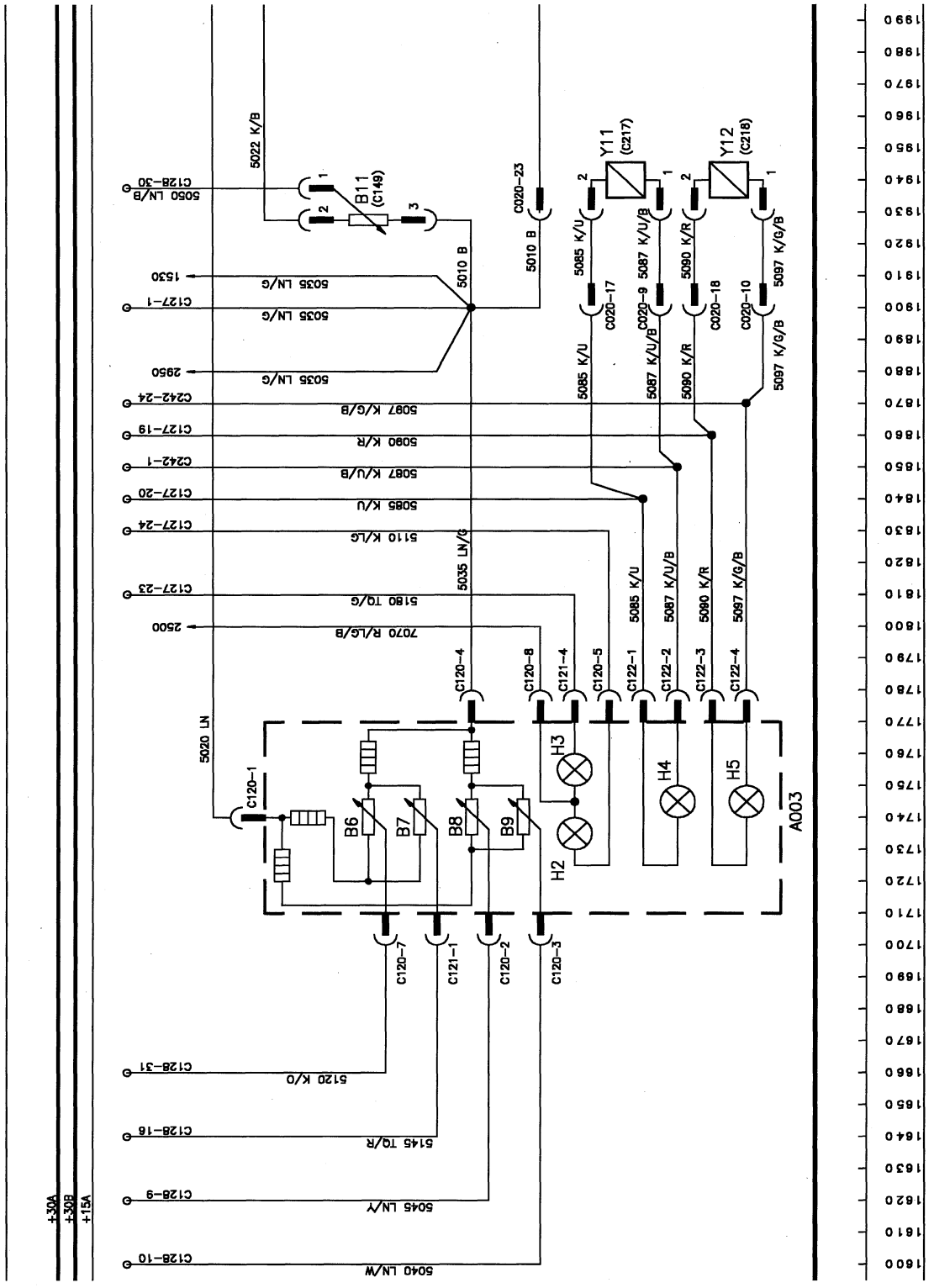
+30A
+30B
+15A
5022 K/B
B11 (C149)
5050 LN/B
C128-30
5010 B
C020-23
Y11 (C217)
Y12 (C218)
5085 K/U
5087 K/U/B
5090 K/R
5097 K/G/B
C020-17
C020-9
C020-18
C020-10
1530
5035 LN/G
C127-1
2950
C242-24
5087 K/G/B
C127-19
5090 K/R
C242-1
5087 K/U/B
C127-20
5085 K/U
C127-24
5110 K/LG
5035 LN/G
C127-23
5180 TG/G
2500
7070 R/LG/B
C120-4
C120-8
C121-4
C120-5
C122-1
C122-2
C122-3
C122-4
5020 LN
C120-1
B6
B7
B8
B9
H2
H3
H4
H5
A003
C120-7
C121-1
C120-2
C120-3
C128-31
5120 K/O
C128-16
5145 TG/R
C128-9
5045 LN/Y
C128-10
5040 LN/W
1990
1980
1970
1960
1950
1940
1930
1920
1910
1900
1890
1880
1870
1860
1850
1840
1830
1820
1810
1800
1790
1780
1770
1760
1750
1740
1730
1720
1710
1700
1690
1680
1670
1660
1650
1640
1630
1620
1610
1600

ELECTRONIC DRAFT CONTROL
Line 1600-1990

A003	EDC Panel	**H2**	Status Lamp
		H3	Slip Lamp
B6	Height Limit Potentiometer	**H4**	Raise Lamp
B7	Slip Limit Potentiometer	**H5**	Lower Lamp
B8	Drop Rate Potentiometer		
B9	Draft / position Potentiometer	**Y11**	Raise Solenoid
B11	Lift lever potentiometer	**Y12**	Lower Solenoid

WIRE COLOUR CODES							
B	Black	R	Red	LG	Light Green	K	Pink
N	Brown	O	Orange	U	Blue	W	White
LN	Light Brown	Y	Yellow	TQ	Turquoise		
S	Slate	G	Green	P	Purple		

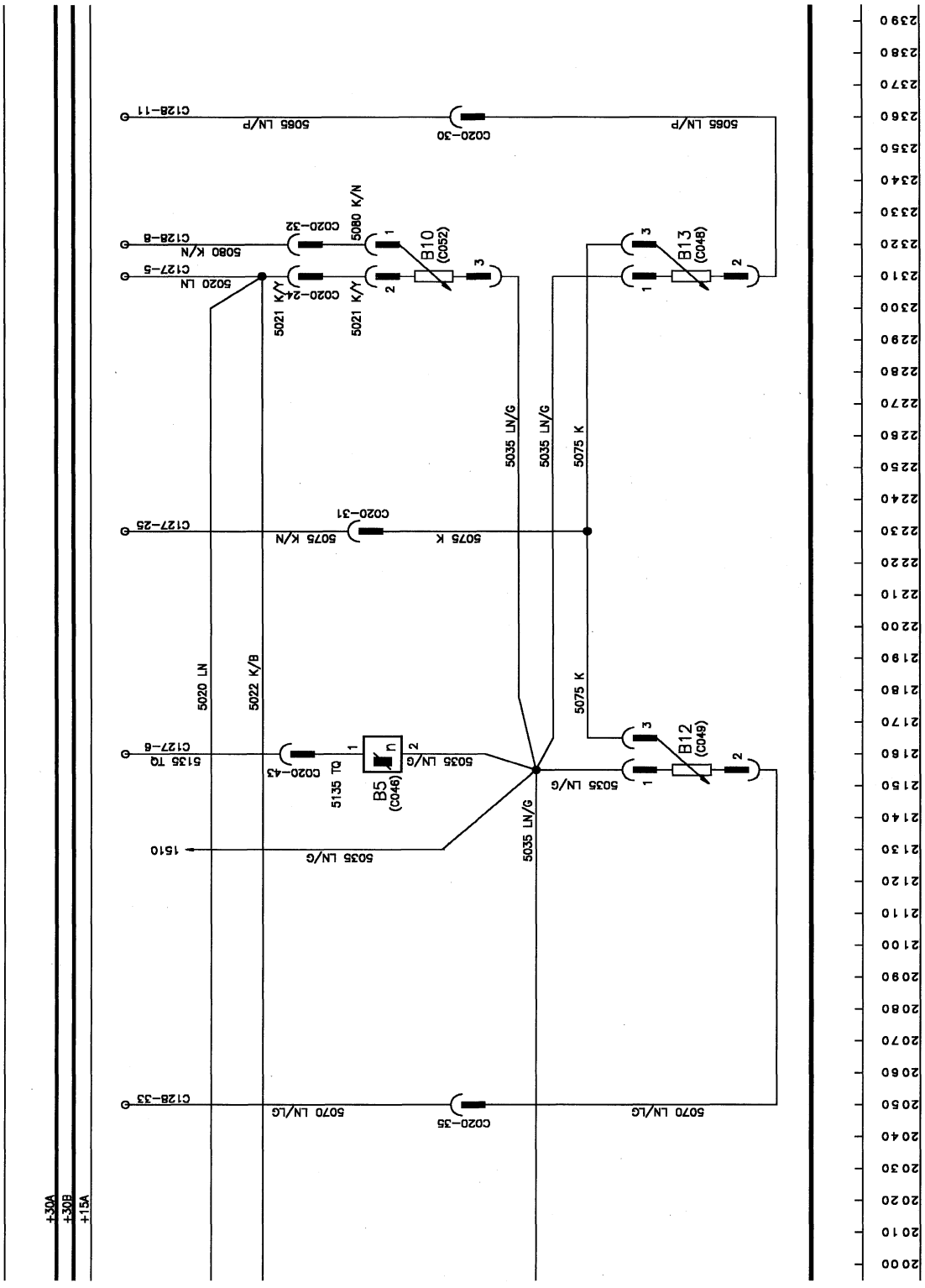
+30A
+30B
+15A
C128-11
5065 LN/P
C020-30
B10 (C052)
B13 (C048)
B12 (C049)
B5 (C046)
5080 K/N
5021 K/Y
5035 LN/G
5075 K
5020 LN
5022 K/B
5135 TQ
5070 LN/LG
1510
C128-33
C020-35

ELECTRONIC DRAFT CONTROL
Line 2000-2390

B5 Axle speed sensor
B10 Lift arm shaft potentiometer
B12 Draft pin left
B13 Draft pin right

WIRE COLOUR CODES							
B	Black	R	Red	LG	Light Green	K	Pink
N	Brown	O	Orange	U	Blue	W	White
LN	Light Brown	Y	Yellow	TQ	Turquoise		
S	Slate	G	Green	P	Purple		

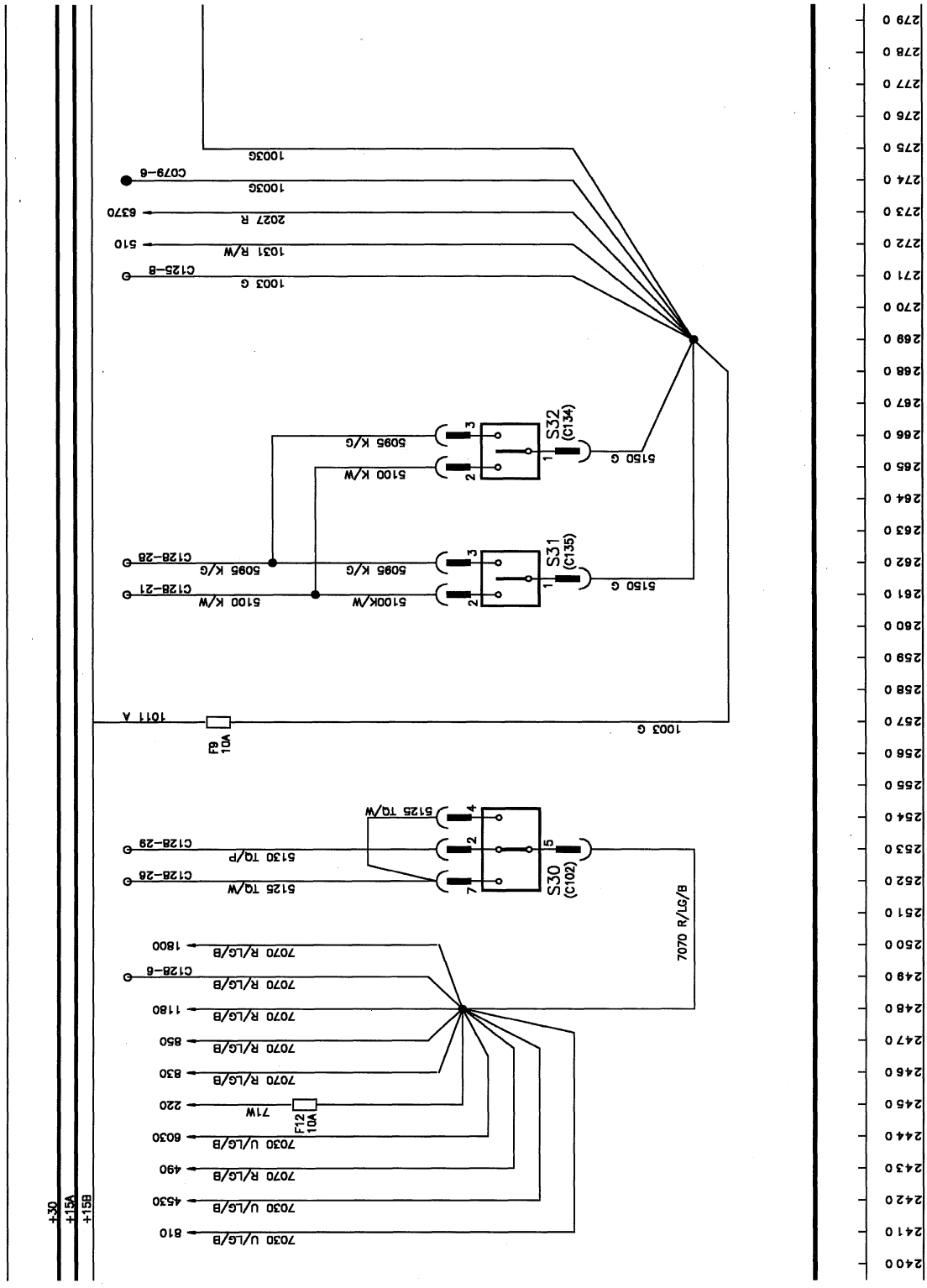
+30
+15A
+15B
1800
7070 R/LG/B
C128-6
1180
850
830
220
71W
F12 10A
6030
7030 U/LG/B
490
530
810
C128-29
5130 TQ/P
C128-26
5125 TQ/W
S30 (C102)
7070 R/LG/B
1011 A
F9 10A
1003 G
C128-28
5095 K/G
C128-21
5100 K/W
5100K/W
S31 (C135)
5150 G
S32 (C134)
C125-B
1031 R/W
510
2027 R
6370
C079-6
279 0
278 0
277 0
276 0
275 0
274 0
273 0
272 0
271 0
270 0
269 0
268 0
267 0
266 0
265 0
264 0
263 0
262 0
261 0
260 0
259 0
258 0
257 0
256 0
255 0
254 0
253 0
252 0
251 0
250 0
249 0
248 0
247 0
246 0
245 0
244 0
243 0
242 0
241 0
240 0

ELECTRONIC DRAFT CONTROL
Line 2400-2790

F9 10A, Gauges and external switches fuse
F12 10A, EDC fuse

S30 In cab Raise/work switch
S31 Fender switch, left
S32 Fender switch, right

WIRE COLOUR CODES							
B	Black	R	Red	LG	Light Green	K	Pink
N	Brown	O	Orange	U	Blue	W	White
LN	Light Brown	Y	Yellow	TQ	Turquoise		
S	Slate	G	Green	P	Purple		

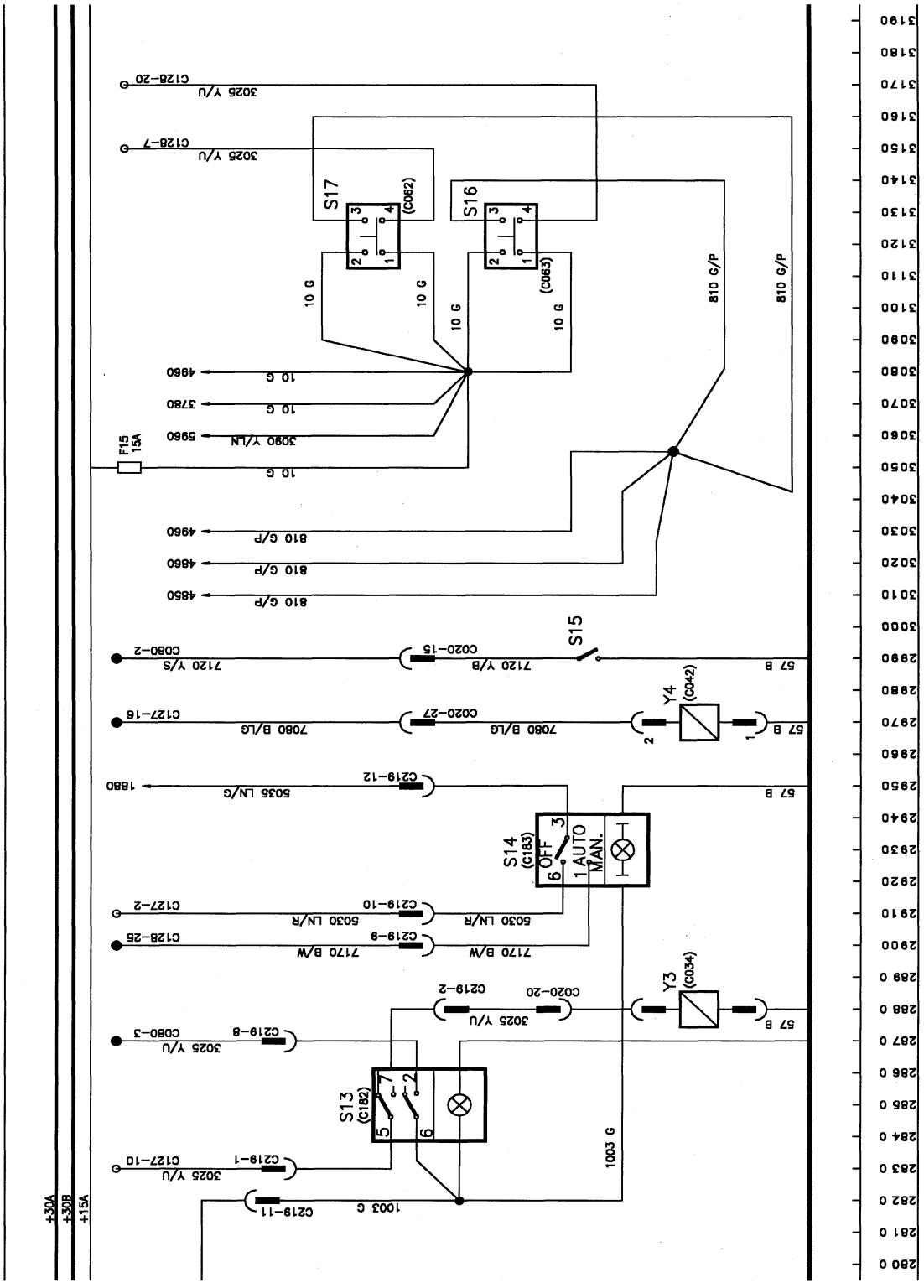
S17
S16
S15
S14
S13
Y4
Y3
F15
15A
10 G
810 G/P
3025 Y/U
3080 Y/LN
7120 Y/S
7120 Y/B
7080 B/LG
5035 LN/G
5030 LN/R
7170 B/W
1003 G
57 B
+30A
+30B
+15A

FOUR WHEEL DRIVE AND DIFFERENTIAL LOCK
Line 2800-3190

F15 15A, Stop lamps fuse

S13 FWD, cab switch
S14 Differential, cab switch
S15 Differential Lock Engaged Switch
S16 Brake Switch - Right Hand
S17 Brake Switch - Left Hand

Y3 Four Wheel Drive Solenoid
Y4 Differential Lock Solenoid

WIRE COLOUR CODES							
B	Black	R	Red	LG	Light Green	K	Pink
N	Brown	O	Orange	U	Blue	W	White
LN	Light Brown	Y	Yellow	TQ	Turquoise		
S	Slate	G	Green	P	Purple		

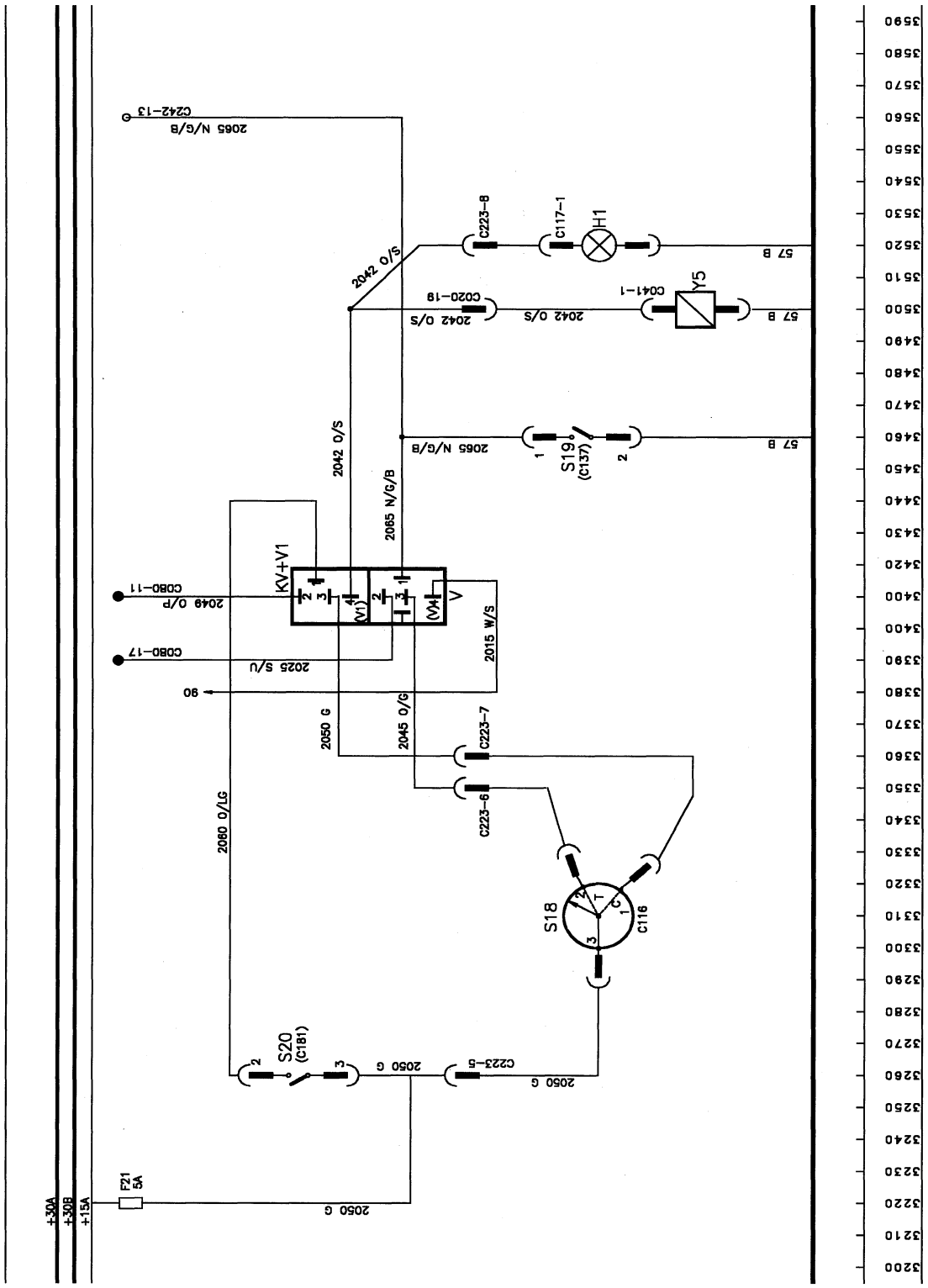
C242-13
2065 N/G/B
C223-8
C117-1
H1
57 B
2042 O/S
C020-18
2042 O/S
C041-1
Y5
57 B
2065 N/G/B
S19
(C137)
57 B
2042 O/S
2065 N/G/B
KV+V1
C080-11
2049 O/P
C080-17
2025 S/U
2015 W/S
90
2050 G
2045 O/G
C223-7
C223-6
2080 O/LG
S18
C116
S20
(C181)
2050 G
C223-5
2050 G
F21
5A
2050 G
+30A
+30B
+15A
3590
3580
3570
3560
3550
3540
3530
3520
3510
3500
3490
3480
3470
3460
3450
3440
3430
3420
3400
3400
3390
3380
3370
3360
3350
3340
3330
3320
3310
3300
3290
3280
3270
3260
3250
3240
3230
3220
3210
3200

POWER TAKE OFF
Line 3200-3590

F21 5A, PTO fuse

H1 PTO engaged lamp

KV+V1 PTO Relay

S18 PTO switch

S19 Seat switch

S20 540/1000 PTO speed switch

Y5 PTO Solenoid

WIRE COLOUR CODES							
B	Black	R	Red	LG	Light Green	K	Pink
N	Brown	O	Orange	U	Blue	W	White
LN	Light Brown	Y	Yellow	TQ	Turquoise		
S	Slate	G	Green	P	Purple		

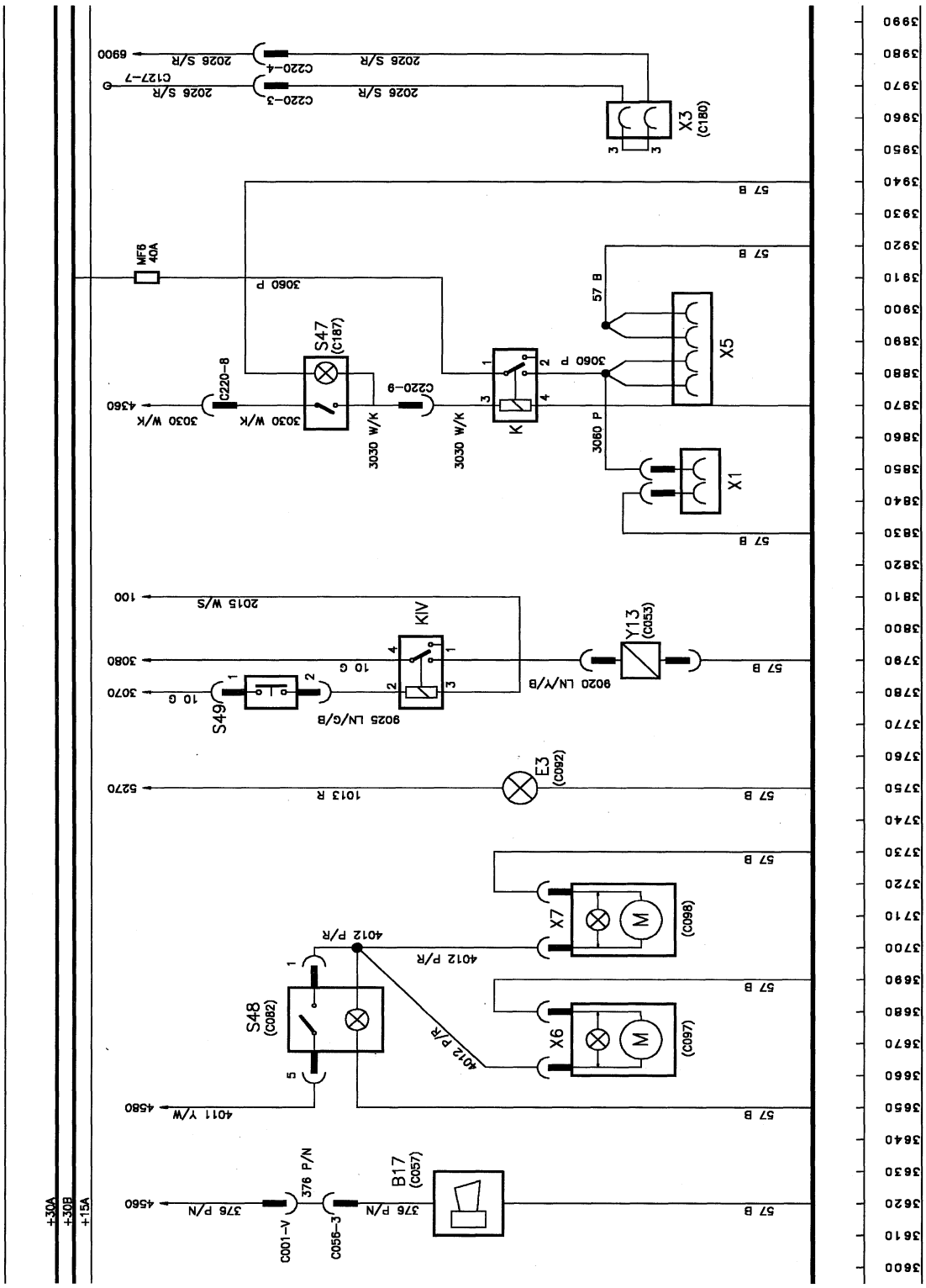
+30A
+30B
+15A
3600
3610
3620
3630
3640
3650
3660
3670
3680
3690
3700
3710
3720
3730
3740
3750
3760
3770
3780
3790
3800
3810
3820
3830
3840
3850
3860
3870
3880
3890
3900
3910
3920
3930
3940
3950
3960
3970
3980
3990
4560
4580
5270
3070
3080
100
4360
6900
376 P/N
376 P/N
376 P/N
C001-V
C056-3
B17
(C057)
4011 Y/W
4012 P/R
4012 P/R
4012 P/R
S48
(C082)
X6
(C097)
X7
(C098)
E3
(C092)
1013 R
S49
10 G
10 G
9025 LN/G/B
KIV
9020 LN/Y/B
Y13
(C053)
2015 W/S
3030 W/K
3030 W/K
3030 W/K
3030 W/K
C220-8
C220-9
S47
(C187)
K
3060 P
3060 P
3060 P
X5
X1
57 B
MF6
40A
C127-7
2026 S/R
2026 S/R
2026 S/R
2026 S/R
C220-3
C220-4
X3
(C180)

CAB ACCESSORIES
Line 3600-3990

B17	Horn
E3	Console Light
K	Implement socket relay
KIV	Remote valve relay
MF6	Maxi Fuse 6, 40A
S47	40Amp Accessory terminals switch
S48	Beacon switch
S49	Remote valve switch
X1	40 Amp screw terminal
X3	Implement status socket
X5	4 Pin 40 amp socket
X6	Roof beacon left hand
X7	Roof beacon right hand
Y13	Remote valve solenoid

WIRE COLOUR CODES							
B	Black	R	Red	LG	Light Green	K	Pink
N	Brown	O	Orange	U	Blue	W	White
LN	Light Brown	Y	Yellow	TQ	Turquoise		
S	Slate	G	Green	P	Purple		

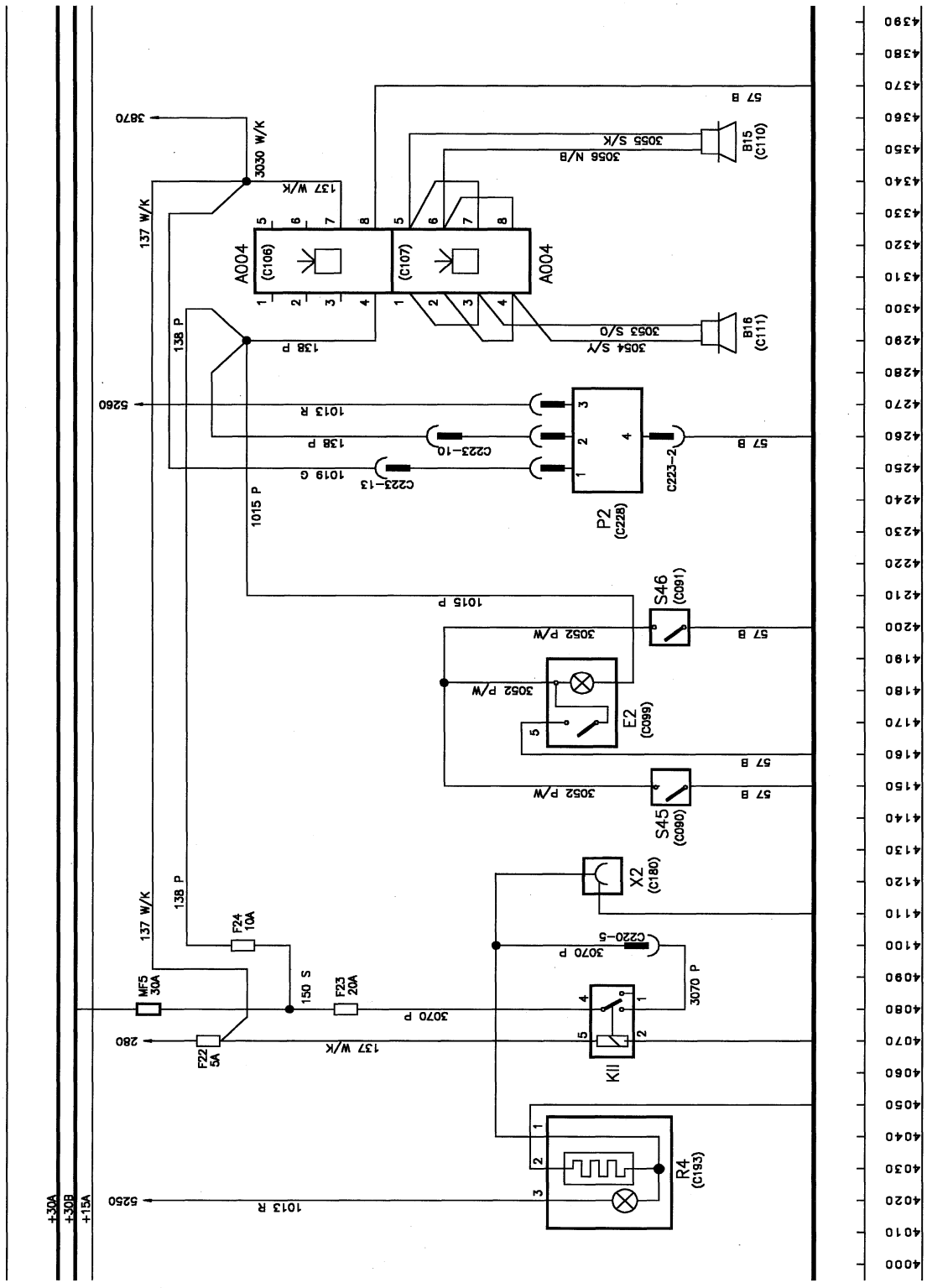
3870
3030 W/K
137 W/K
A004 (C106)
A004 (C107)
B15 (C110)
B16 (C111)
3055 S/K
3056 N/B
3053 S/O
3054 S/Y
57 B
138 P
1013 R
1019 G
1015 P
C223-10
C223-13
C223-2
P2 (C228)
S46 (C091)
S45 (C090)
3052 P/W
E2 (C099)
X2 (C180)
C220-5
3070 P
F24 10A
F23 20A
F22 5A
MF5 30A
150 S
280
5260
5250
KII
R4 (C193)
+30A
+30B
+15A

CAB ACCESSORIES
Line 4000-4390

A004 Radio

B15 Speaker
B16 Speaker

E2 Interior light

F22 5A, radio and accessory socket fuse
F23 20A, Accessories, radio
F24 10A, interior lamp

KII Accessory socket relay

MF5 Maxi fuse 5 30A

P2 Clock

R4 Cigar lighter

S45 Interior light door switch
S46 Interior light door switch

X2 Accessory socket

WIRE COLOUR CODES							
B	Black	R	Red	LG	Light Green	K	Pink
N	Brown	O	Orange	U	Blue	W	White
LN	Light Brown	Y	Yellow	TQ	Turquoise		
S	Slate	G	Green	P	Purple		

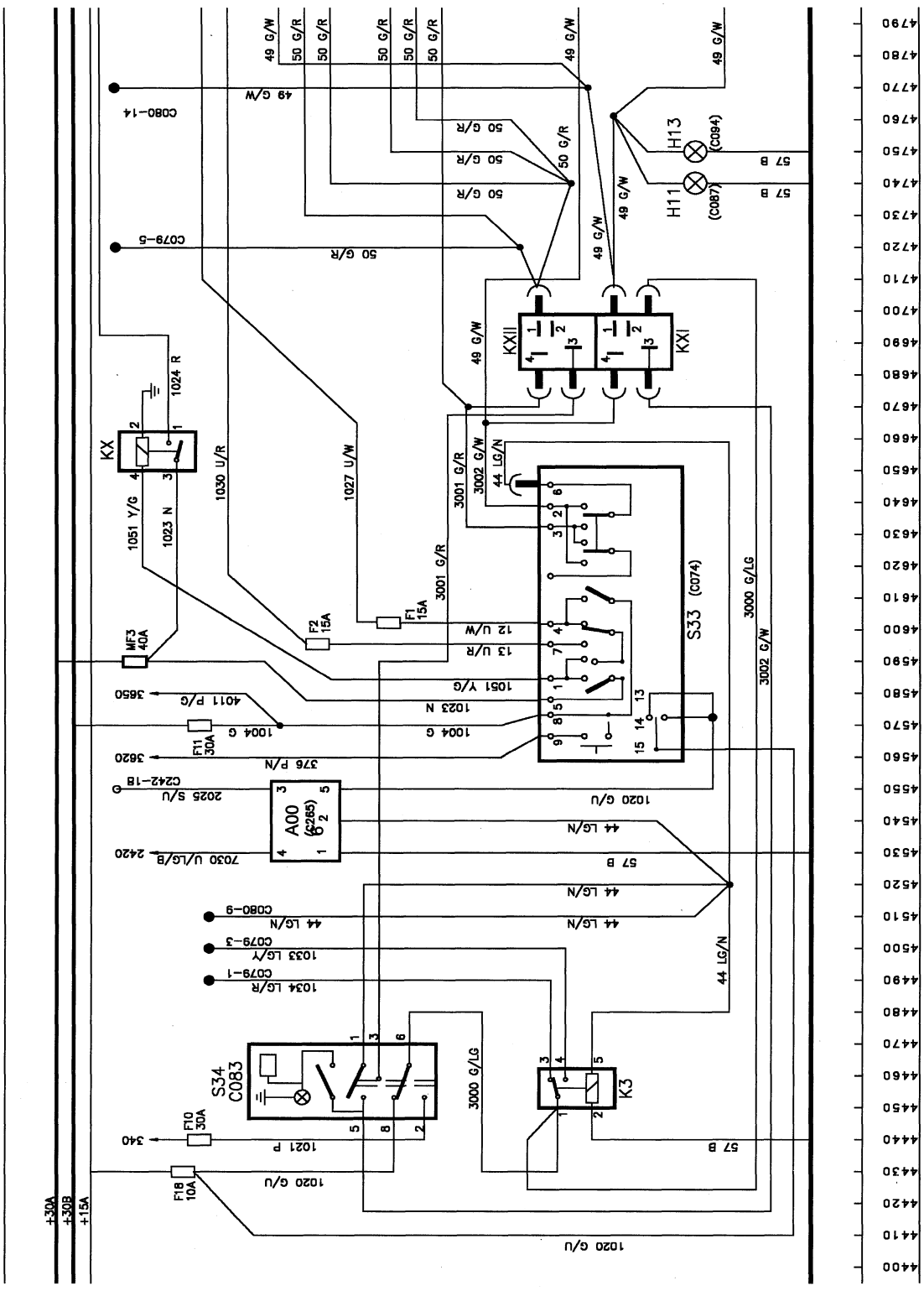
+30A
+30B
+15A
F18 10A
F10 30A
F11 30A
MF3 40A
F1 15A
F2 15A
KX
KXII
KXI
K3
S33 (C074)
S34 C083
A00 (C285)
H13 (C094)
H11 (C087)
C080-14
C079-5
C080-9
C079-3
C079-1
C242-18
49 G/W
50 G/R
57 B
1024 R
1030 U/R
1027 U/W
1051 Y/G
1023 N
3001 G/R
3002 G/W
44 LG/N
3000 G/LG
12 U/W
13 U/R
1004 G
1020 G/U
1021 P
1033 LG/Y
1034 LG/R
2025 S/U
7030 U/LG/B
376 P/N
4011 P/G
3650
3820
2420
340

INDICATOR AND HAZARD LIGHTS
Line 4400-4790

A006 External Buzzer Unit

F1 15A Headlamp dip fuse
F2 15A Headlamp main fuse
F10 15A Hazards fuse
F11 30A Horn, flashers, cigar lighter, beacon fuse
F18 10A Indicators fuse

H11 Right hand front indicator lamp - NASO
H13 Right hand rear indicator lamp - NASO

K3 Flasher unit relay
KX Multi-function switch unload relay
KXI + Flasher mode relay
KXII

MF3 Maxi fuse 3, 40A

S33 Indicator switch
S34 Hazard light switch

WIRE COLOUR CODES							
B	Black	R	Red	LG	Light Green	K	Pink
N	Brown	O	Orange	U	Blue	W	White
LN	Light Brown	Y	Yellow	TQ	Turquoise		
S	Slate	G	Green	P	Purple		

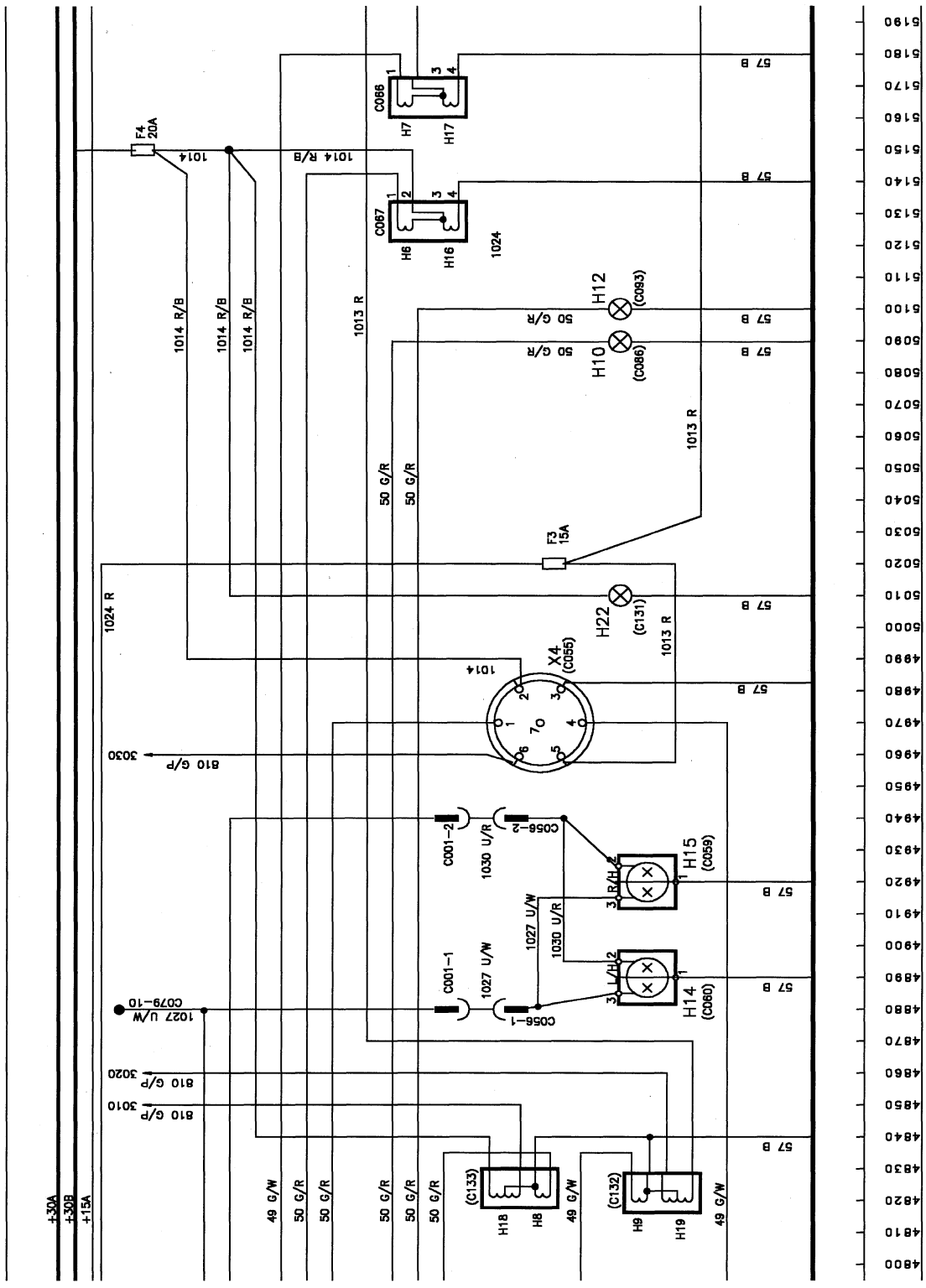
+30A
+30B
+15A
F4
20A
1014
1014 R/B
1014 R/B
1014 R/B
1014 R/B
1013 R
C066
H7
H17
C067
H6
H16
1024
H12
(C093)
H10
(C086)
50 G/R
50 G/R
50 G/R
50 G/R
1013 R
F3
15A
H22
(C131)
1013 R
1024 R
X4
(C055)
1014
57 B
57 B
57 B
57 B
57 B
57 B
57 B
57 B
57 B
3030
810 G/P
C001-2
1030 U/R
C056-2
H15
(C059)
1027 U/W
1030 U/R
C001-1
1027 U/W
C056-1
H14
(C060)
C079-10
1027 U/W
3020
810 G/P
3010
810 G/P
(C133)
H18
H8
(C132)
H9
H19
49 G/W
49 G/W
49 G/W
50 G/R
50 G/R
50 G/R
50 G/R
50 G/R
5190
5180
5170
5160
5150
5140
5130
5120
5110
5100
5090
5080
5070
5060
5050
5040
5030
5020
5010
5000
4990
4980
4970
4960
4950
4940
4930
4920
4910
4900
4890
4880
4870
4860
4850
4840
4830
4820
4810
4800

MAIN LIGHTS
Line 4800-5190

F3	15A Right hand side lamp fuse
F4	15A Left hand side lamp fuse
H6	Left hand front indicator lamp, ISO
H7	Right hand front indicator lamp, ISO
H8	Left hand rear indicator lamp, ISO
H9	Right hand rear indicator lamp, ISO
H10	Left hand front indicator lamp, NASO
H12	Left hand rear indicator lamp, NASO
H14	Left hand headlamp
H15	Right hand headlamp
H16	Left hand front side lamp
H17	Right hand front side lamp
H18	Left hand rear brake lamp
H19	Right hand rear brake lamp
H22	Licence plate lamp, lower
X4	Trailer socket

WIRE COLOUR CODES							
B	Black	R	Red	LG	Light Green	K	Pink
N	Brown	O	Orange	U	Blue	W	White
LN	Light Brown	Y	Yellow	TQ	Turquoise		
S	Slate	G	Green	P	Purple		

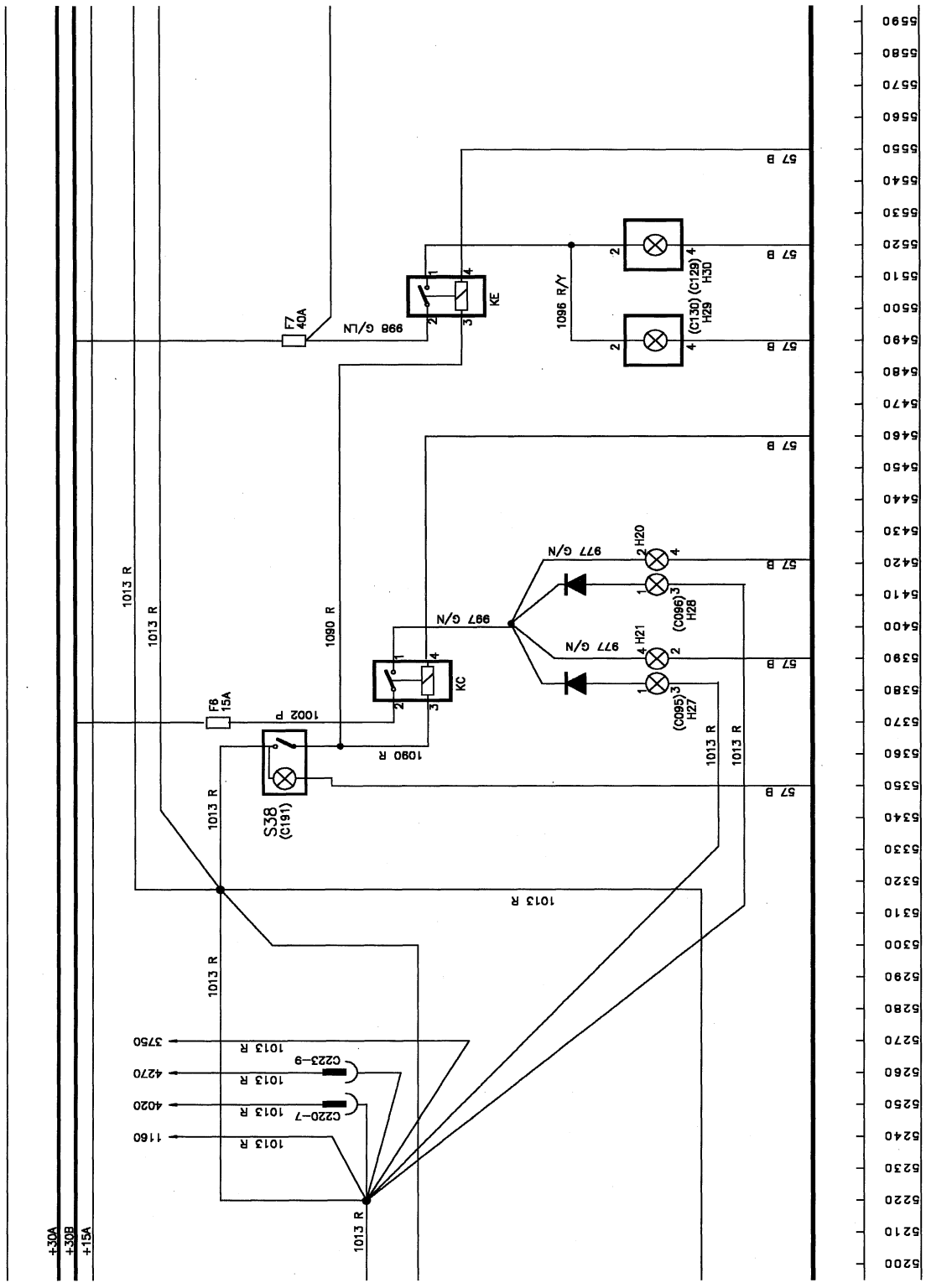
+30A
+30B
+15A
F7 40A
998 G/LN
KE
1096 R/Y
(C130) (C129) H30 H29
F6 15A
1002 P
KC
1090 R
997 G/N
977 G/N
H20
H21
(C096) H28
(C095) H27
S38 (C191)
1013 R
57 B
C223-9
C220-7
3750
4270
4020
1160
5590
5580
5570
5560
5550
5540
5530
5520
5510
5500
5490
5480
5470
5460
5450
5440
5430
5420
5410
5400
5390
5380
5370
5360
5350
5340
5330
5320
5310
5300
5290
5280
5270
5260
5250
5240
5230
5220
5210
5200

WORKLAMPS
Line 5200-5590

F6 15A Rear fender worklamps fuse
F7 20A Front and rear roof worklamps fuse

H27 Left hand upper rear worklamp
H28 Right hand upper rear worklamp
H29 Left hand lower rear wworklamp
H30 Right hand lower rear worklamp

KC Rear worklamp relay
KE Lower rear worklamp relay

S38 Rear worklamp switch

WIRE COLOUR CODES							
B	Black	R	Red	LG	Light Green	K	Pink
N	Brown	O	Orange	U	Blue	W	White
LN	Light Brown	Y	Yellow	TQ	Turquoise		
S	Slate	G	Green	P	Purple		

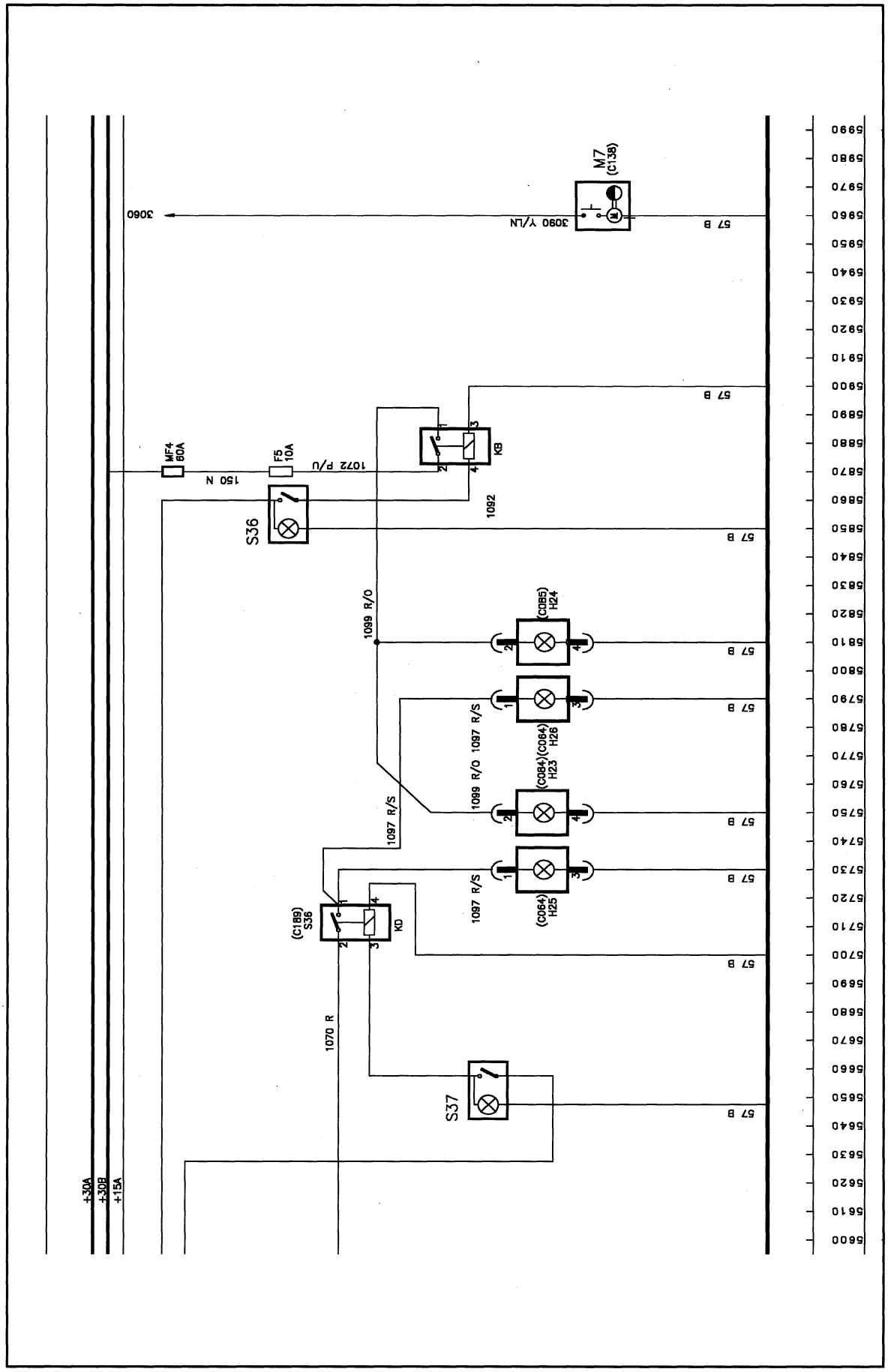
M7
(C138)
3090 Y/LN
3060
57 B
WF4
60A
F5
10A
1072 P/U
150 N
KB
S36
1092
1099 R/O
(C085)
H24
1097 R/S
(C084)(C064)
H26
H23
(C064)
H25
(C189)
S36
KD
1070 R
S37
+30A
+30B
+15A

WORKLAMPS
Line 5600-5990

F5 10A Low front worklamp

H23 Left hand upper front worklamp
H24 Right hand upper front worklamp
H25 Left hand lower front worklamp
H26 Right hand lower front worklamp

KB Front worklamp relay

KD Front lower worklamp relay

M7 Air seat pump

MF4 Maxi fuse 4, 60A

S36 Front upper worklamp switch
S37 Front lower worklamp switch

WIRE COLOUR CODES							
B	Black	R	Red	LG	Light Green	K	Pink
N	Brown	O	Orange	U	Blue	W	White
LN	Light Brown	Y	Yellow	TQ	Turquoise		
S	Slate	G	Green	P	Purple		

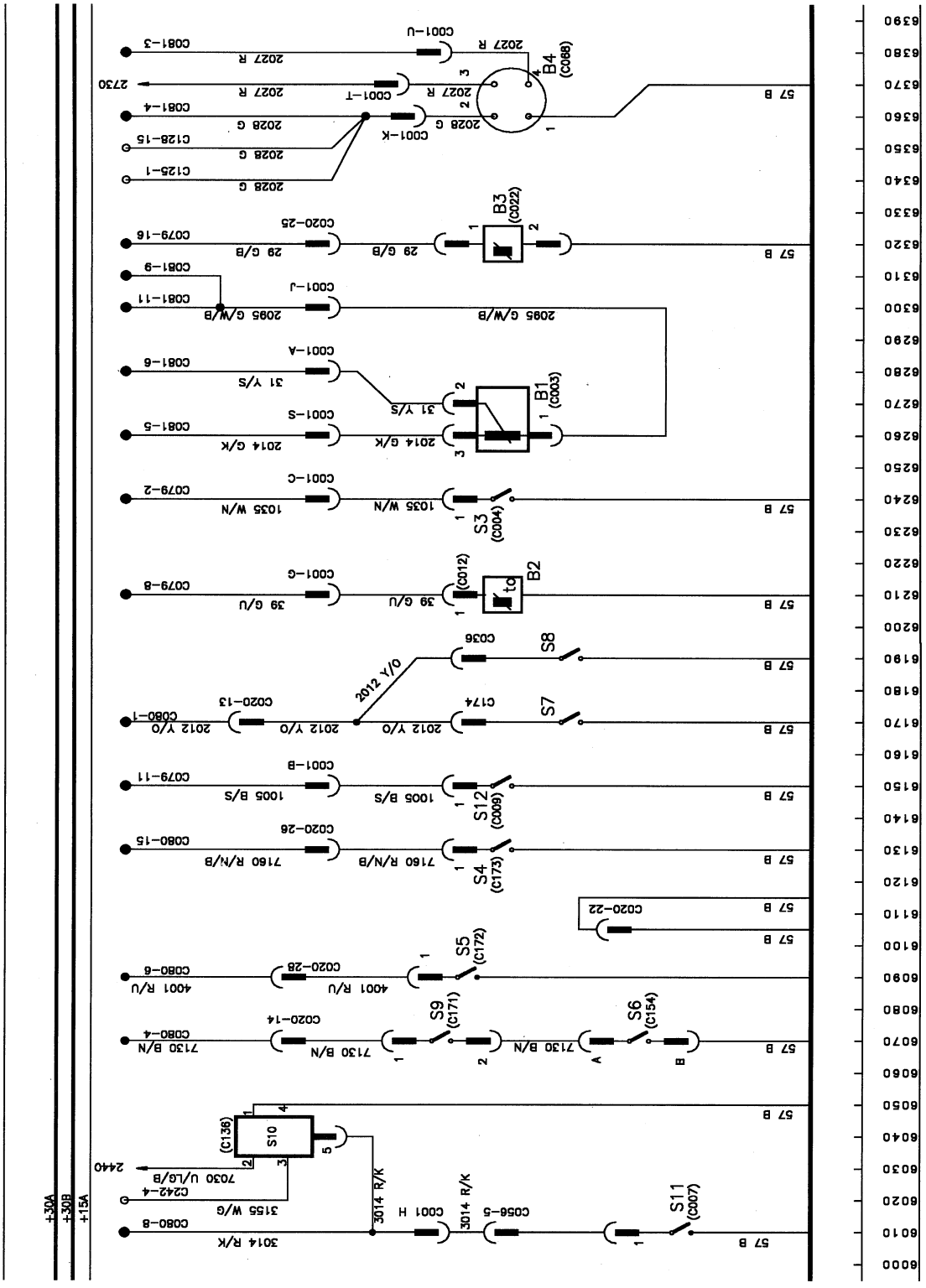
+30A
+30B
+15A
B1 (C003)
B2
B3 (C022)
B4 (C068)
S3 (C004)
S4 (C173)
S5 (C172)
S6 (C154)
S7
S8
S9 (C171)
S10 (C136)
S11 (C007)
S12 (C009)
2012 Y/O
3014 R/K
57 B

SENSORS
Line 6000-6390

B1 Engine oil pressure sender
B2 Engine coolant temperature sender
B3 Fuel tank sender
B4 Radar

S3 Engine oil pressure switch
S4 Low charge pressure switch (CCLS)
S5 Hydraulic oil temperature switch
S6 Hydraulic filter blocked switch
S7 Steering pressure switch
S8 Transmission pressure switch
S9 Transmission oil temperature switch
S10 Handbrake switch
S11 Brake fluid level switch
S12 Air filter vacuum switch

WIRE COLOUR CODES							
B	Black	R	Red	LG	Light Green	K	Pink
N	Brown	O	Orange	U	Blue	W	White
LN	Light Brown	Y	Yellow	TQ	Turquoise		
S	Slate	G	Green	P	Purple		

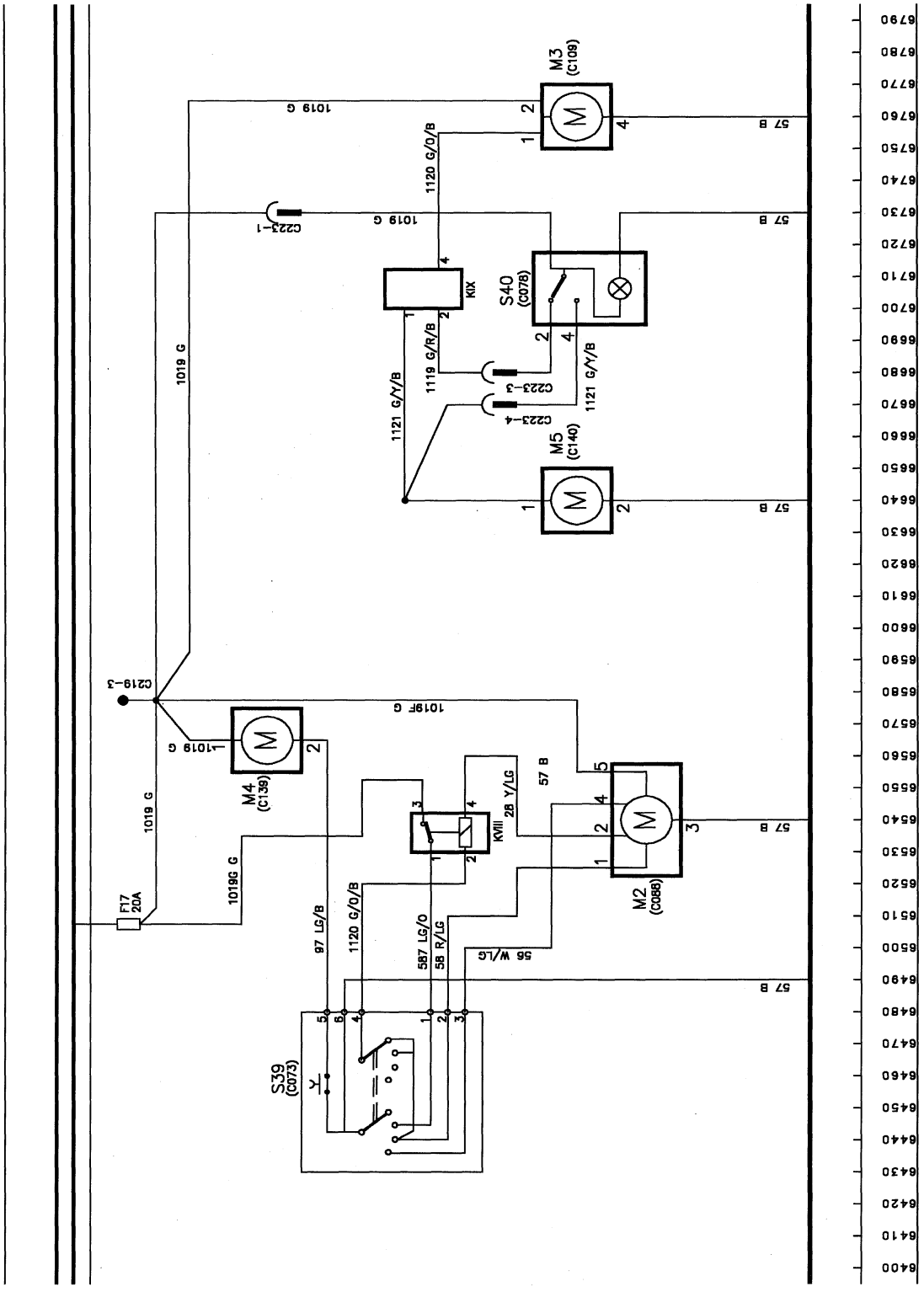
M3
(C109)
M5
(C140)
M4
(C139)
M2
(C088)
S40
(C078)
S39
(C073)
K9X
KVIII
F17
20A
C223-1
C223-3
C223-4
C219-3
1019 G
1019F G
1120 G/O/B
1119 G/R/B
1121 G/Y/B
1121 G/Y/B
1019G G
97 LG/B
587 LG/O
58 R/LG
56 W/LG
57 B
2B Y/LG
6790
6780
6770
6760
6750
6740
6730
6720
6710
6700
6690
6680
6670
6660
6650
6640
6630
6620
6610
6600
6590
6580
6570
6560
6550
6540
6530
6520
6510
6500
6490
6480
6470
6460
6450
6440
6430
6420
6410
6400

WASHERS AND WIPERS
Line 6400-6790

F17 20A, Washers and wipers fuse

KVIII Intermittent front wiper relay
KIX Intermittent rear wiper relay

M2 Front wiper motor
M3 Rear wiper motor

M4 Washer motor - front
M5 Washer motor - rear

S39 Front washer/wiper switch
S40 Rear washer/wiper switch

WIRE COLOUR CODES							
B	Black	R	Red	LG	Light Green	K	Pink
N	Brown	O	Orange	U	Blue	W	White
LN	Light Brown	Y	Yellow	TQ	Turquoise		
S	Slate	G	Green	P	Purple		

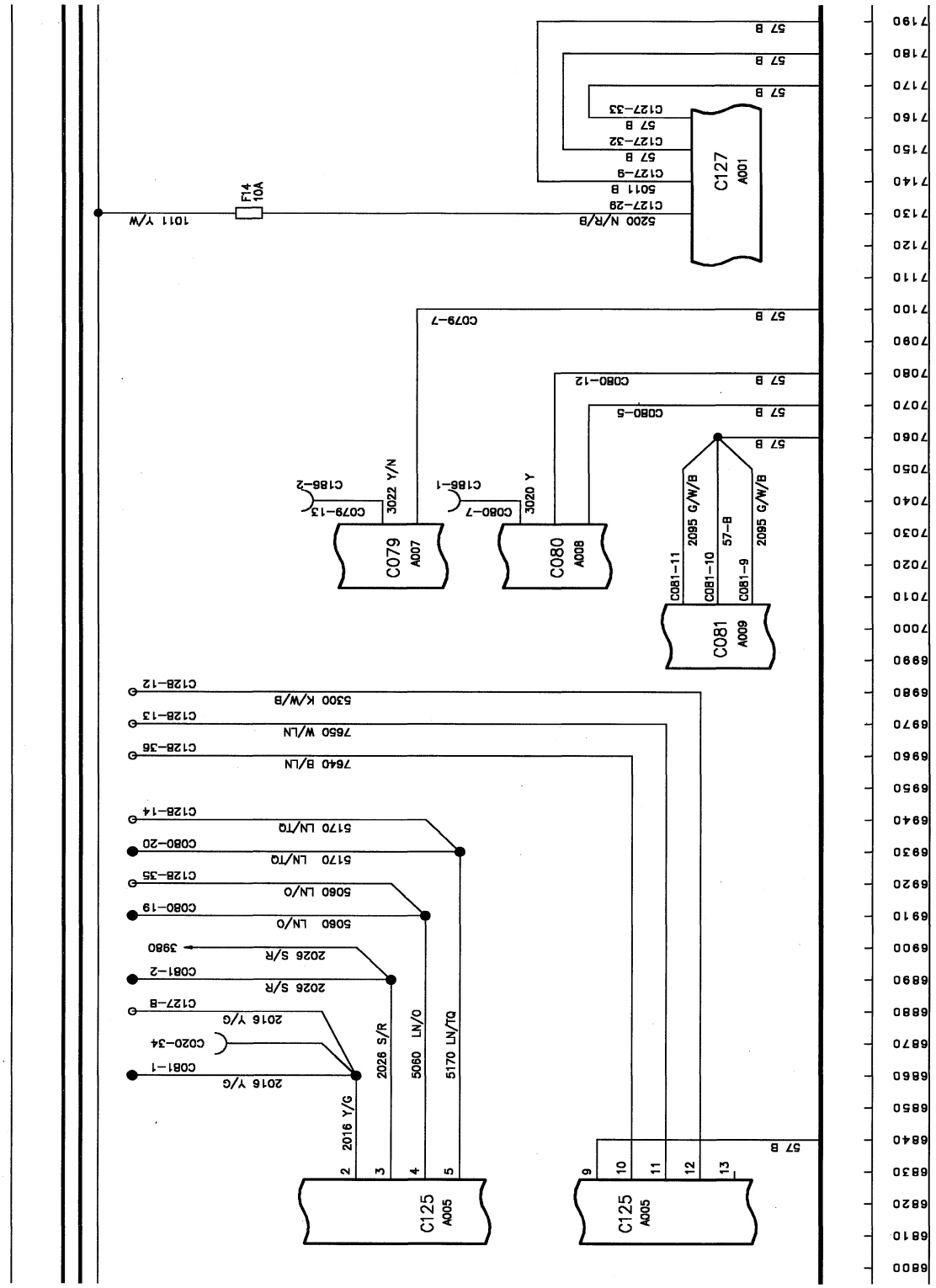
C127
A001
C079
A007
C080
A008
C081
A009
C125
A005
C125
A005
F14
10A
1011 Y/W
5200 N/R/B
C127-29
5011 B
C127-9
C127-32
C127-33
57 B
C079-7
C080-12
C080-5
C080-7
C079-13
C186-1
C186-2
3022 Y/N
3020 Y
C081-11
C081-10
C081-9
2095 G/W/B
57-B
2095 G/W/B
C128-12
5300 K/W/B
C128-13
7650 W/LN
C128-36
7640 B/LN
C128-14
5170 LN/TQ
C080-20
5170 LN/TQ
C128-35
5080 LN/O
C080-19
5080 LN/O
3980
2026 S/R
C081-2
2026 S/R
C127-8
2016 Y/G
C020-34
C081-1
2016 Y/G
2016 Y/G
2026 S/R
5080 LN/O
5170 LN/TQ
2
3
4
5
9
10
11
12
13
7190
7180
7170
7160
7150
7140
7130
7120
7110
7100
7090
7080
7070
7060
7050
7040
7030
7020
7010
7000
6990
6980
6970
6960
6950
6940
6930
6920
6910
6900
6890
6880
6870
6860
6850
6840
6830
6820
6810
6800

PROCESSOR FEEDS AND GROUNDS
Line 6800-7190

A001 Transmission / EDC Processor
A005 Diagnostic plug
A007 Instrument cluster
A008 Instrument cluster
A009 Instrument cluster

F14 10A, EDC processor feed

WIRE COLOUR CODES							
B	Black	R	Red	LG	Light Green	K	Pink
N	Brown	O	Orange	U	Blue	W	White
LN	Light Brown	Y	Yellow	TQ	Turquoise		
S	Slate	G	Green	P	Purple		

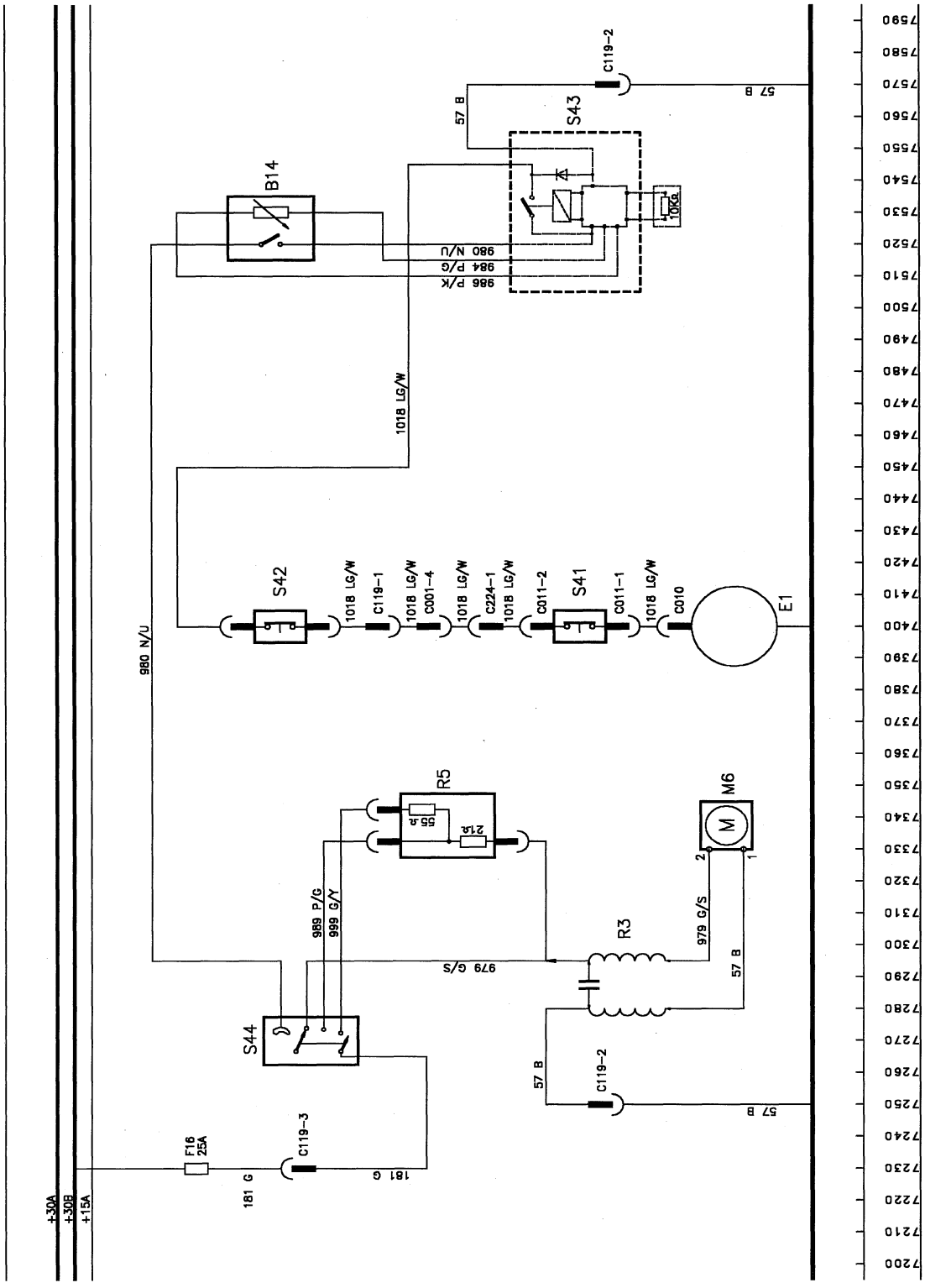
+30A
+30B
+15A
F16
25A
C119-3
181 G
181 G
S44
989 P/G
999 G/Y
979 G/S
R5
55Ω
21Ω
R3
979 G/S
57 B
M6
M
2
1
980 N/U
S42
1018 LG/W
C119-1
1018 LG/W
C001-4
1018 LG/W
C224-1
1018 LG/W
C011-2
S41
C011-1
1018 LG/W
C010
E1
1018 LG/W
B14
980 N/U
984 P/G
986 P/K
S43
10KΩ
57 B
C119-2
57 B
7200
7210
7220
7230
7240
7250
7260
7270
7280
7290
7300
7310
7320
7330
7340
7350
7360
7370
7380
7390
7400
7410
7420
7430
7440
7450
7460
7470
7480
7490
7500
7510
7520
7530
7540
7550
7560
7570
7580
7590

AIR CONDITIONING AND CAB HEATING
Line 7200-7590

B14 Temperature control potentiometer

E1 Air conditioning compressor clutch

F16 25A, Air Con and heater blower fuse

M6 Heater blower motor

R3 Blower speed resistor

R5 Speed resistor

S41 Air con, high/low pressure switch

S42 Low pressure cut out switch

S43 Temperature control switch

S44 Blower speed switch

WIRE COLOUR CODES							
B	Black	R	Red	LG	Light Green	K	Pink
N	Brown	O	Orange	U	Blue	W	White
LN	Light Brown	Y	Yellow	TQ	Turquoise		
S	Slate	G	Green	P	Purple		

NOTES PAGE

WIRING DIAGRAMS:

TS SERIES: Electroshift Transmission, (16x16 with Power Shuttle) Less Cab,

Wiring Diagrams Circuit	Description	Line Reference Range
Circuit 1	Starting, Charging, Thermostart, Fuel Injection Pump	0-390
Circuit 2	Transmission Circuits	400-1590
Circuit 3	Electronic Draft Control	1600-2790
Circuit 4	Four Wheel Drive and Differential Lock	2800-3190
Circuit 5	Power Take Off	3200-3590
Circuit 6	Cab Accessories	3600-4390
Circuit 7	Main Lamps, Indicators & Hazards	4400-5190
Circuit 8	Work Lamps	5200-5990
Circuit 9	Sensors / Senders	6000-6390
Circuit 10	Wipers & Washers	6400-6790
Circuit 11	Processor Feed and Ground connections	6800-7190
Circuit 12	Air-Conditioning & Heating	7200-7590

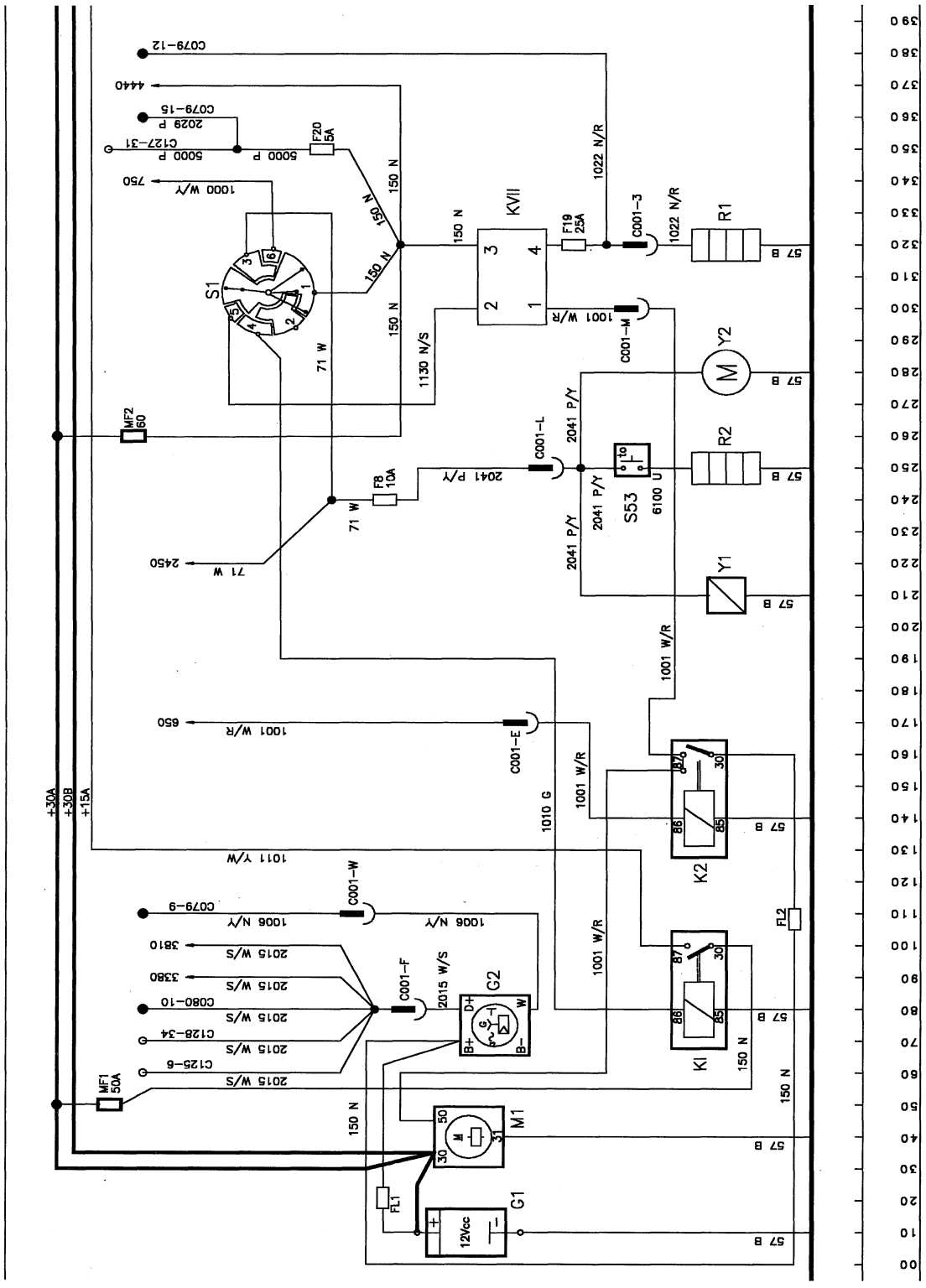
C079-12
4440
C079-15
2029 P
C127-31
5000 P
5000 P
F20
5A
750
1000 W/Y
150 N
150 N
150 N
150 N
150 N
S1
71 W
1130 N/S
KVII
F19
25A
1022 N/R
C001-3
1022 N/R
R1
57 B
1001 W/R
C001-M
Y2
57 B
MF2
60
C001-L
2041 P/Y
R2
57 B
F8
10A
2041 P/Y
71 W
S53
6100 U
2041 P/Y
2041 P/Y
2450
71 W
Y1
57 B
1001 W/R
650
1001 W/R
C001-E
1001 W/R
1010 G
+30A
+30B
+15A
1011 Y/W
K2
57 B
C079-9
C001-W
1006 N/Y
1006 N/Y
FL2
3810
2015 W/S
3380
2015 W/S
C080-10
2015 W/S
C128-34
2015 W/S
C125-6
2015 W/S
C001-F
2015 W/S
G2
1001 W/R
KI
57 B
150 N
150 N
MF1
50A
150 N
M1
57 B
FL1
G1
12Vcc
57 B

STARTING, CHARGING, THERMOSTART, FUEL INJECTION PUMP
line 0-390

STARTING

FL1 Fuse Link
FL2 Fuse Link
G1 Battery
K1 Ignition Relay
K2 Start Relay
M1 Starter Motor and Solenoid
S1 Ignition Switch

CHARGING

G2 Alternator

THERMOSTART AND FUEL SYSTEM

F8 10A, Shut off Solenoid Fuse
F19 25A Fuse

KVII Thermostart relay

R1 Thermostart coil
R2 Fuel Injection Pump Wax Motor
S53 Thermostatic Switch
Y1 Shut Off Solenoid
Y2 Electric Lift Pump

MF1 Maxi Fuse 1 50A
MF2 Maxi Fuse 2 60A
F20 5A, Processor 'Keep alive memory' Fuse

WIRE COLOUR CODES							
B	Black	R	Red	LG	Light Green	K	Pink
N	Brown	O	Orange	U	Blue	W	White
LN	Light Brown	Y	Yellow	TQ	Turquoise		
S	Slate	G	Green	P	Purple		

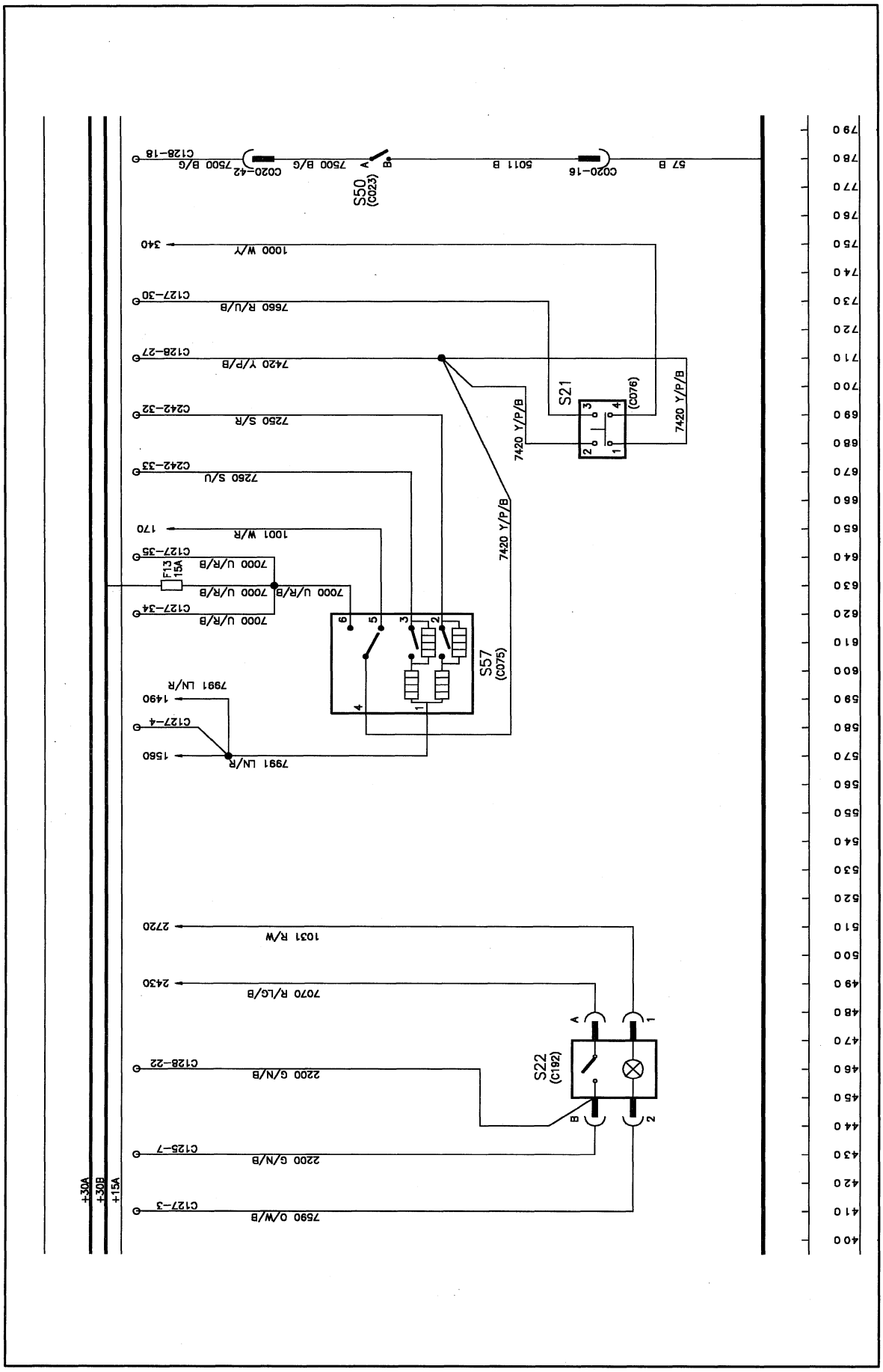
C128-18
7500 B/G
C020-42
7500 B/G
S50
(C023)
5011 B
C020-16
57 B
340
1000 W/Y
C127-30
7660 R/U/B
C128-27
7420 Y/P/B
S21
(C076)
7420 Y/P/B
C242-32
7250 S/R
C242-33
7260 S/U
170
1001 W/R
C127-35
7000 U/R/B
F13
15A
7000 U/R/B
C127-34
7000 U/R/B
S57
(C075)
7991 LN/R
1490
C127-4
1560
7991 LN/R
2720
1031 R/W
2430
7070 R/LG/B
C128-22
2200 G/N/B
S22
(C192)
C125-7
2200 G/N/B
C127-3
7590 O/W/B
+30A
+30B
+15A

TRANSMISSION SYSTEM
Line 400-790

F13 15A, Transmission Fuse

S21 Clutch Pedal Switch
S22 Creeper Switch
S50 Transmision Oil Temperature Switch
S57 Forward/Reverse Shuttle Lever

WIRE COLOUR CODES							
B	Black	R	Red	LG	Light Green	K	Pink
N	Brown	O	Orange	U	Blue	W	White
LN	Light Brown	Y	Yellow	TQ	Turquoise		
S	Slate	G	Green	P	Purple		

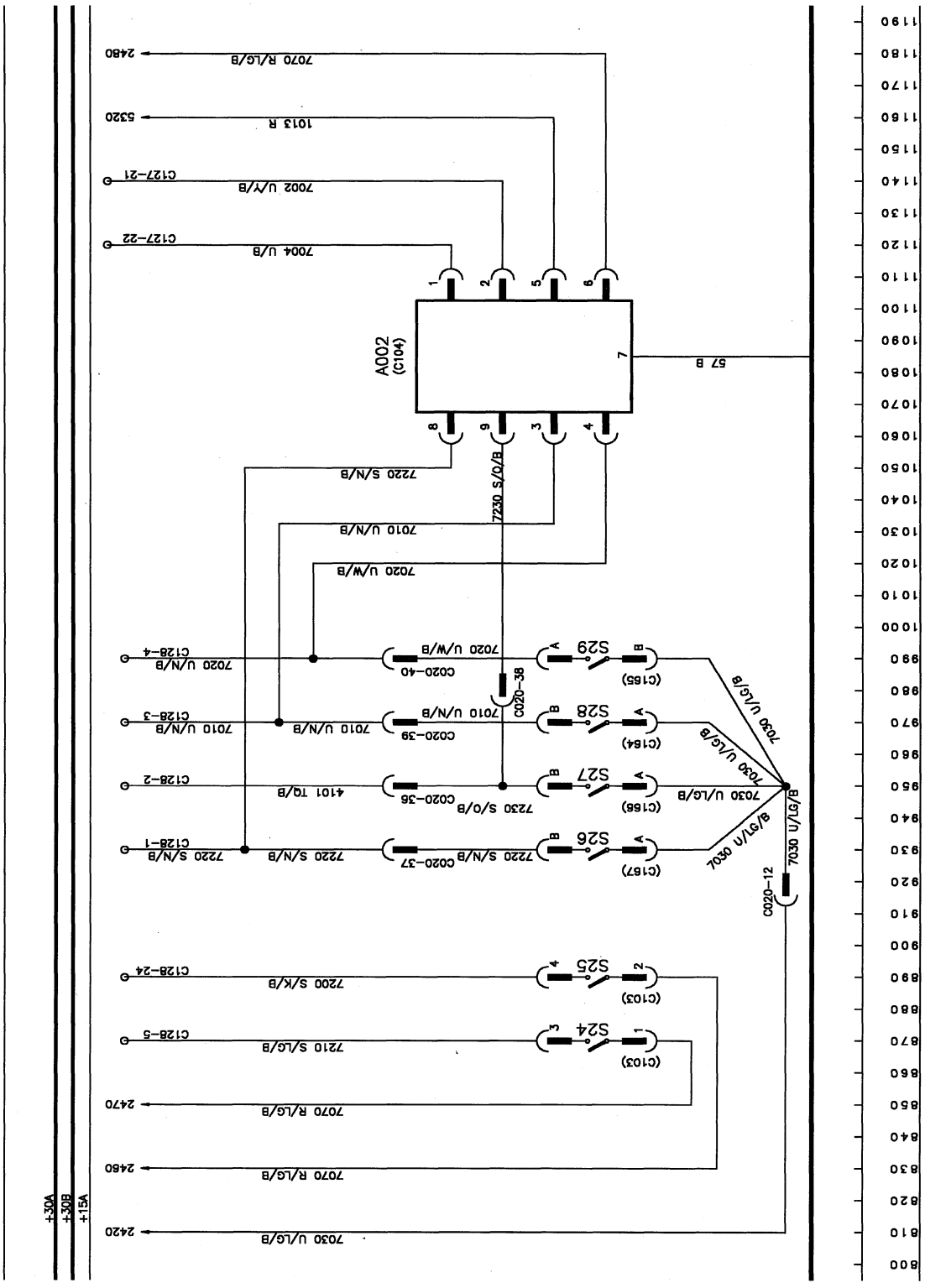
A002
(C104)
S29
S28
S27
S26
S25
S24
(C165)
(C164)
(C166)
(C167)
(C103)
(C103)
C020-40
C020-39
C020-38
C020-37
C020-36
C020-12
7070 R/LG/B
1013 R
7002 U/Y/B
7004 U/B
7220 S/N/B
7230 S/O/B
7010 U/N/B
7020 U/W/B
7030 U/LG/B
7200 S/K/B
7210 S/LG/B
4101 TG/B
57 B
2480
5320
C127-21
C127-22
C128-4
C128-3
C128-2
C128-1
C128-24
C128-5
2470
2460
2420
+30A
+30B
+15A

Electroshift Transmission, (16x16 with Power Shuttle) Less Cab,

TRANSMISSION SYSTEM
Line 800-1190

A002 Gear Display Module

S24 Upshift switch
S25 Downshift switch
S26 High range switch
S27 Low range switch
S28 1-4 range switch
S29 5-8 range switch

WIRE COLOUR CODES							
B	Black	R	Red	LG	Light Green	K	Pink
N	Brown	O	Orange	U	Blue	W	White
LN	Light Brown	Y	Yellow	TQ	Turquoise		
S	Slate	G	Green	P	Purple		

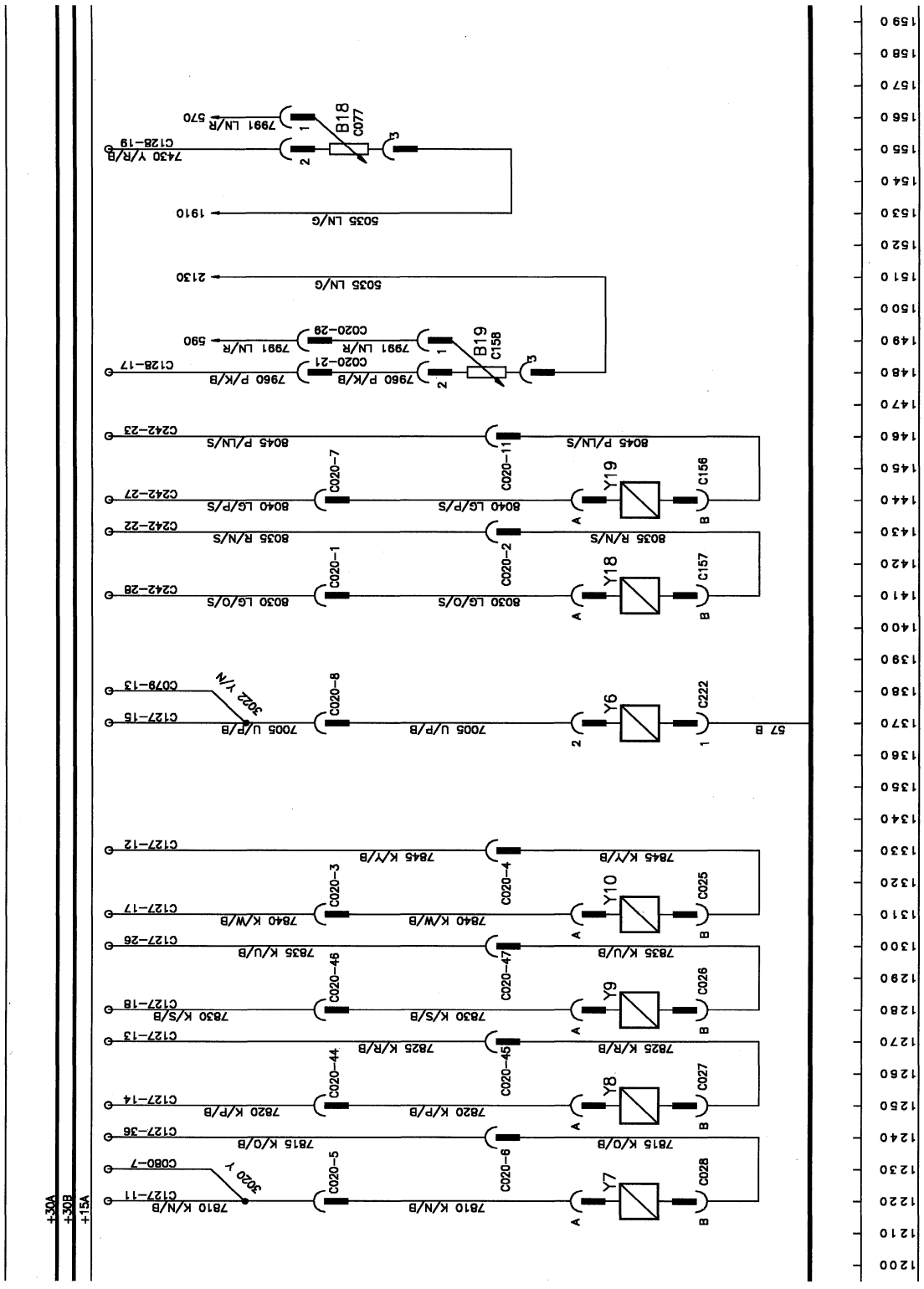
+30A
+30B
+15A
B18
C077
B19
C158
Y19
Y18
Y6
Y10
Y9
Y8
Y7
C156
C157
C222
C025
C026
C027
C028
C020-1
C020-2
C020-3
C020-4
C020-5
C020-6
C020-7
C020-11
C020-44
C020-45
C020-46
C020-47
C020-29
C020-21
C020-8
C128-19
C128-17
C242-23
C242-27
C242-22
C242-28
C127-12
C127-17
C127-26
C127-18
C127-13
C127-14
C127-36
C127-11
C127-15
C079-13
C080-7
7991 LN/R
570
7430 Y/R/B
5035 LN/G
1910
2130
590
7960 P/K/B
8045 P/LN/S
8040 LG/P/S
8035 R/N/S
8030 LG/O/S
7005 U/P/B
57 B
7845 K/Y/B
7840 K/W/B
7835 K/U/B
7830 K/S/B
7825 K/R/B
7820 K/P/B
7815 K/O/B
7810 K/N/B
3022 Y/N
3020 Y

TRANSMISSION SYSTEM
Line 1150-1410

B18 Clutch pedal potentiometer
B19 Forward/reverse synchroniser potentiometer

Y6 Creeper solenoid
Y7 PWM Valve 1
Y8 PWM Valve 2
Y9 PWM Valve 3
Y10 PWM Valve 4
Y18 PWM Valve Forward
Y19 PWM Valve Reverse

WIRE COLOUR CODES							
B	Black	R	Red	LG	Light Green	K	Pink
N	Brown	O	Orange	U	Blue	W	White
LN	Light Brown	Y	Yellow	TQ	Turquoise		
S	Slate	G	Green	P	Purple		

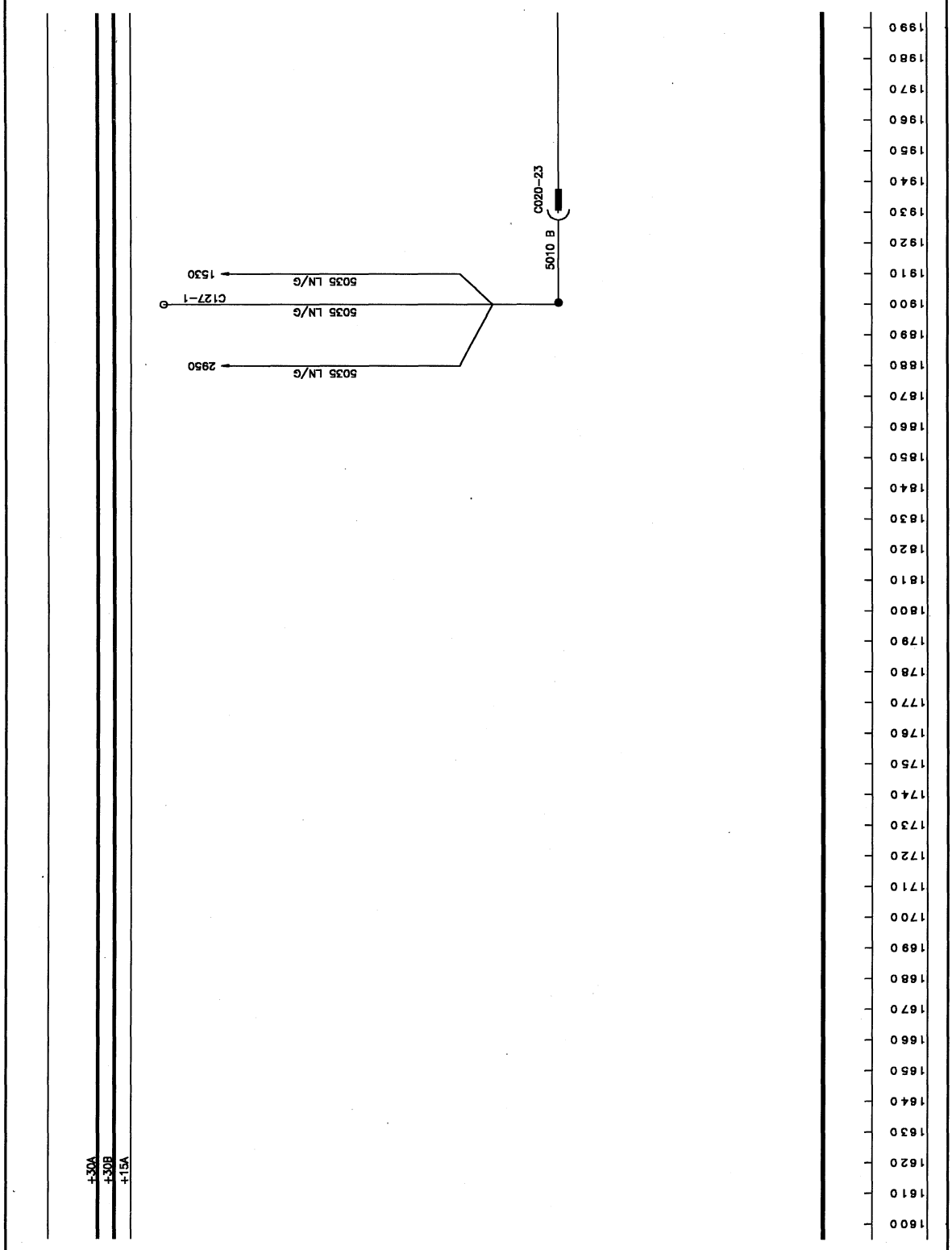
+30A
+30B
+15A
C020-23
5010 B
1530
5035 LN/G
C127-1
5035 LN/G
2950
5035 LN/G
1990
1980
1970
1960
1950
1940
1930
1920
1910
1900
1890
1880
1870
1860
1850
1840
1830
1820
1810
1800
1790
1780
1770
1760
1750
1740
1730
1720
1710
1700
1690
1680
1670
1660
1650
1640
1630
1620
1610
1600

ELECTRONIC DRAFT CONTROL (EDC not applicable to Less Cab models)
Line 1600-1990

WIRE COLOUR CODES							
B	Black	R	Red	LG	Light Green	K	Pink
N	Brown	O	Orange	U	Blue	W	White
LN	Light Brown	Y	Yellow	TQ	Turquoise		
S	Slate	G	Green	P	Purple		

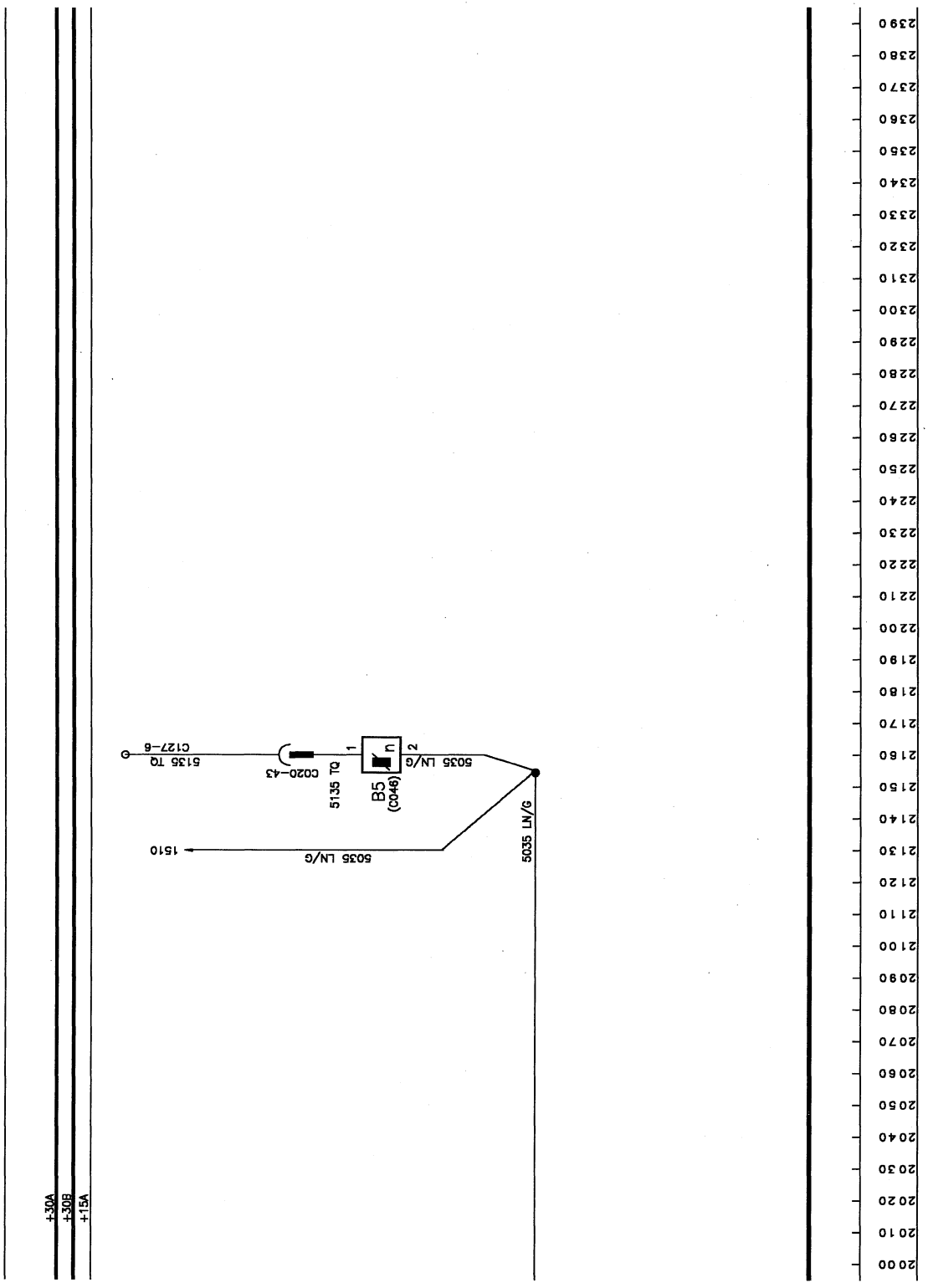
+30A
+30B
+15A
C127-6
5135 TQ
C020-43
5135 TQ
1
B5
(C048)
2
5035 LN/G
5035 LN/G
1510
5035 LN/G
2390
2380
2370
2360
2350
2340
2330
2320
2310
2300
2290
2280
2270
2260
2250
2240
2230
2220
2210
2200
2190
2180
2170
2160
2150
2140
2130
2120
2110
2100
2090
2080
2070
2060
2050
2040
2030
2020
2010
2000

ELECTRONIC DRAFT CONTROL (EDC not applicable to Less Cab models)
Line 2000-2390

B5 Axle speed sensor

WIRE COLOUR CODES							
B	Black	R	Red	LG	Light Green	K	Pink
N	Brown	O	Orange	U	Blue	W	White
LN	Light Brown	Y	Yellow	TQ	Turquoise		
S	Slate	G	Green	P	Purple		

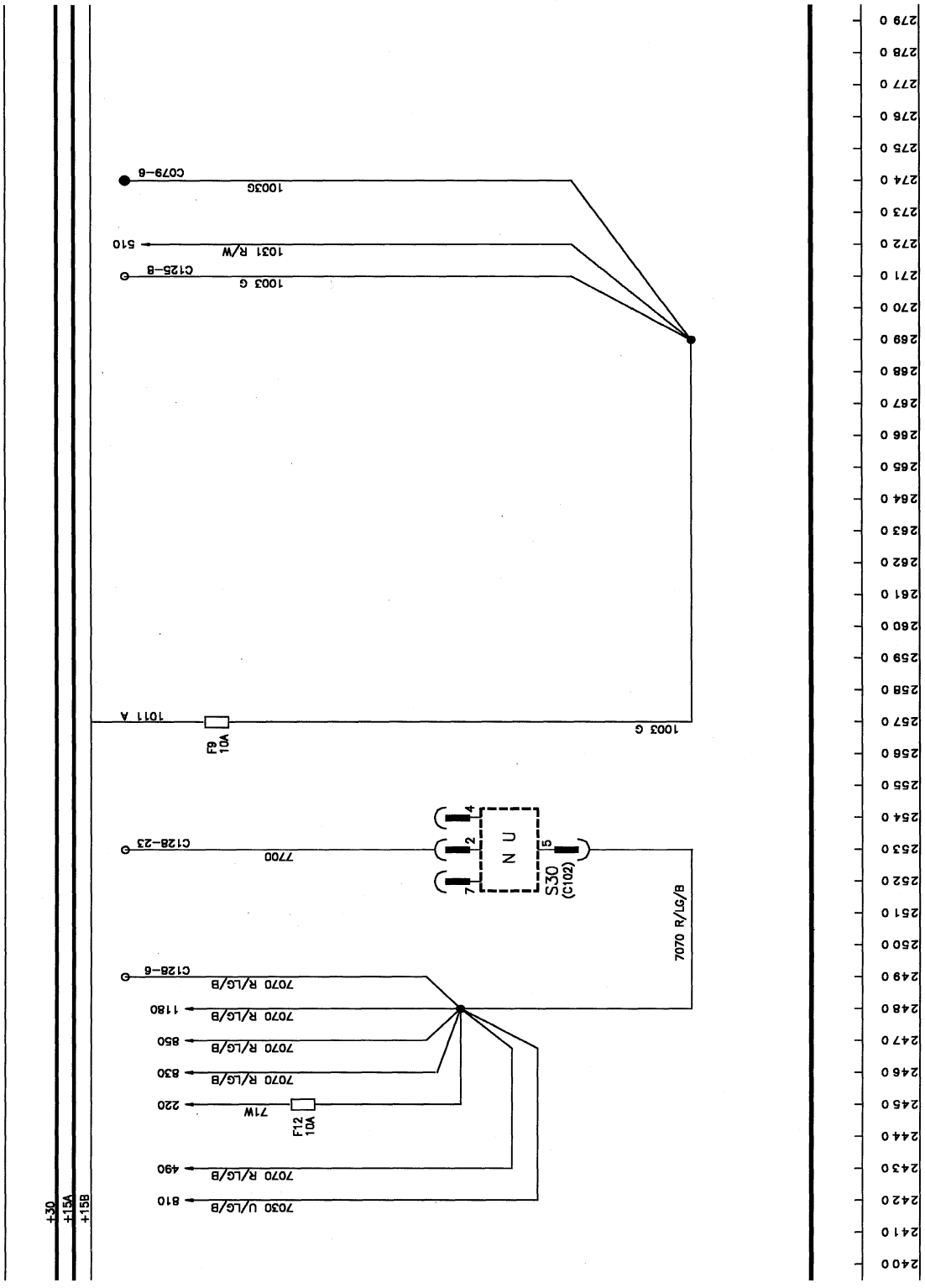
C079-6
1003G
510
1031 R/W
C125-B
1003 G
1011 A
F9
10A
1003 G
C128-23
7700
S30
(C102)
7070 R/LG/B
C128-6
7070 R/LG/B
1180
7070 R/LG/B
850
7070 R/LG/B
830
71W
220
F12
10A
7070 R/LG/B
490
7030 U/LG/B
810
+30
+15A
+15B

ELECTRONIC DRAFT CONTROL (EDC not applicable to Less Cab models)
Line 2400-2790

F9 10A, Gauges and external switches fuse
F12 10A, EDC fuse

S30 In cab Raise/work switch

WIRE COLOUR CODES							
B	Black	R	Red	LG	Light Green	K	Pink
N	Brown	O	Orange	U	Blue	W	White
LN	Light Brown	Y	Yellow	TQ	Turquoise		
S	Slate	G	Green	P	Purple		

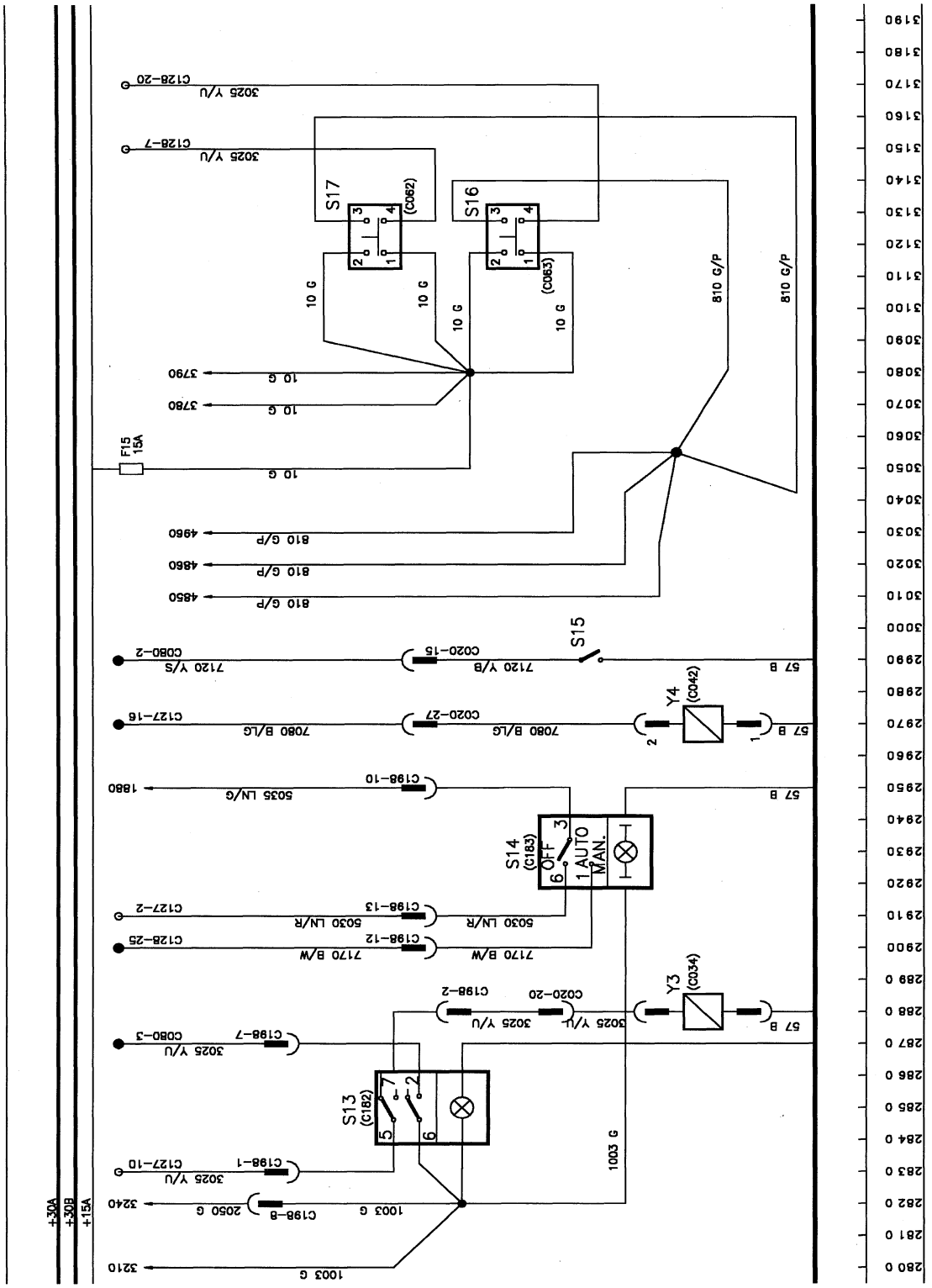
S17
(C062)
S16
(C063)
S15
S14
(C183)
OFF
AUTO
MAN.
S13
(C182)
Y4
(C042)
Y3
(C034)
F15
15A
+30A
+30B
+15A
10 G
810 G/P
3025 Y/U
7120 Y/S
7120 Y/B
7080 B/LG
5035 LN/G
5030 LN/R
7170 B/W
2050 G
1003 G
57 B
3790
3780
4960
4860
4850
1880
3240
3210
C128-20
C128-7
C080-2
C020-15
C127-16
C020-27
C198-10
C127-2
C198-13
C128-25
C198-12
C198-2
C020-20
C198-7
C080-3
C198-1
C127-10
C198-8

FOUR WHEEL DRIVE AND DIFFERENTIAL LOCK
Line 2800-3190

F15 15A, Stop lamps fuse

S13 FWD, cab switch
S14 Differential, cab switch
S15 Differential Lock Engaged Switch
S16 Brake Switch - Right Hand
S17 Brake Switch - Left Hand

Y3 Four Wheel Drive Solenoid
Y4 Differential Lock Solenoid

WIRE COLOUR CODES							
B	Black	R	Red	LG	Light Green	K	Pink
N	Brown	O	Orange	U	Blue	W	White
LN	Light Brown	Y	Yellow	TQ	Turquoise		
S	Slate	G	Green	P	Purple		

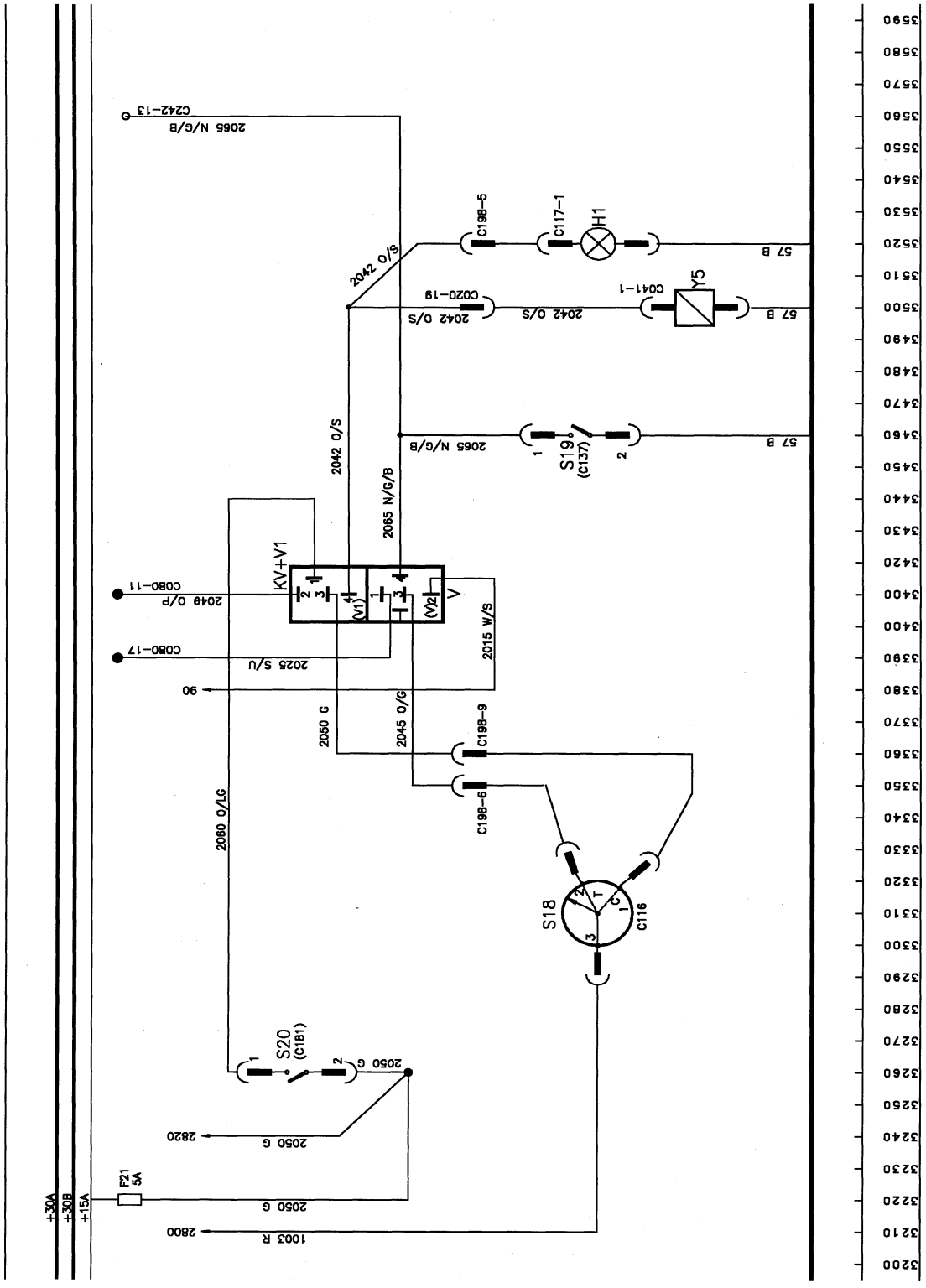
C242-13
2065 N/G/B
C198-5
C117-1
H1
57 B
2042 O/S
C020-19
2042 O/S
C041-1
Y5
57 B
2065 N/G/B
S19
(C137)
57 B
2042 O/S
2065 N/G/B
KV+V1
C080-11
2049 O/P
C080-17
2025 S/U
2015 W/S
90
2050 G
2045 O/G
C198-9
C198-6
2080 O/LG
S18
C116
S20
(C181)
2050 G
2820
2050 G
F21
5A
+30A
+30B
+15A
2050 G
2800
1003 R
3590
3580
3570
3560
3550
3540
3530
3520
3510
3500
3490
3480
3470
3460
3450
3440
3430
3420
3400
3400
3390
3380
3370
3360
3350
3340
3330
3320
3310
3300
3290
3280
3270
3260
3250
3240
3230
3220
3210
3200

POWER TAKE OFF
Line 3200-3590

F21	5A, PTO fuse	**S18**	PTO switch
		S19	Seat switch
H1	PTO engaged lamp	**S20**	540/1000 PTO speed switch
KV+V1	PTO Relay	**Y5**	PTO Solenoid

WIRE COLOUR CODES							
B	Black	R	Red	LG	Light Green	K	Pink
N	Brown	O	Orange	U	Blue	W	White
LN	Light Brown	Y	Yellow	TQ	Turquoise		
S	Slate	G	Green	P	Purple		

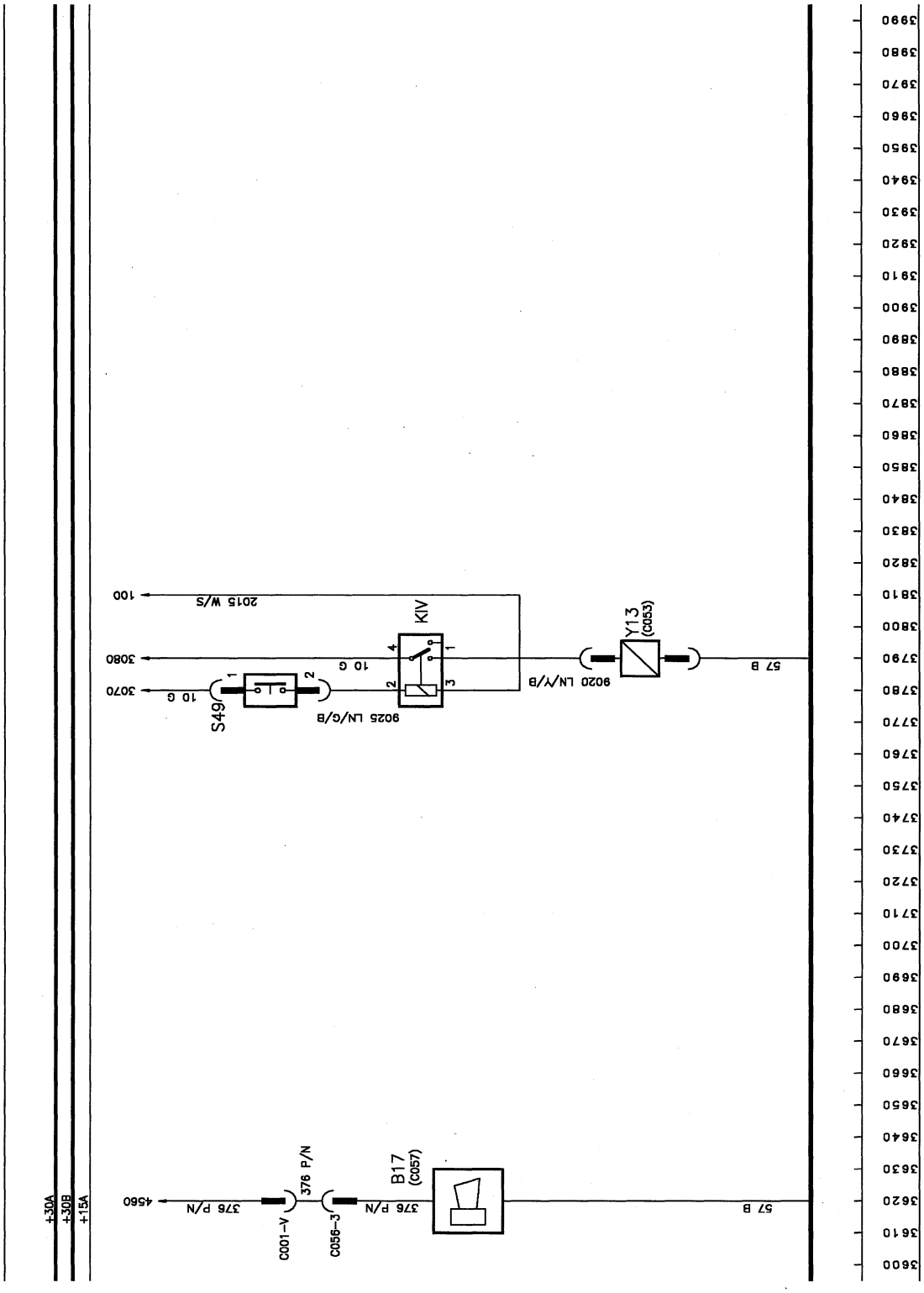
+30A
+30B
+15A
100
2015 W/S
3080
10 G
3070
10 G
S49
9025 LN/G/B
K1V
9020 LN/Y/B
Y13
(C053)
57 B
4560
376 P/N
C001-V
376 P/N
C056-3
B17
(C057)
376 P/N
57 B
3990
3980
3970
3960
3950
3940
3930
3920
3910
3900
3890
3880
3870
3860
3850
3840
3830
3820
3810
3800
3790
3780
3770
3760
3750
3740
3730
3720
3710
3700
3690
3680
3670
3660
3650
3640
3630
3620
3610
3600

CAB ACCESSORIES
Line 3070-3470

B17 Horn

KIV Remote valve relay

S49 Remote valve switch

Y13 Remote valve solenoid

WIRE COLOUR CODES							
B	Black	R	Red	LG	Light Green	K	Pink
N	Brown	O	Orange	U	Blue	W	White
LN	Light Brown	Y	Yellow	TQ	Turquoise		
S	Slate	G	Green	P	Purple		

+30A
+30B
+15A

4000
4010
4020
4030
4040
4050
4060
4070
4080
4090
4100
4110
4120
4130
4140
4150
4160
4170
4180
4190
4200
4210
4220
4230
4240
4250
4260
4270
4280
4290
4300
4310
4320
4330
4340
4350
4360
4370
4380
4390

Not Applicable to this model

CAB ACCESSORIES
Line 4000-4390

WIRE COLOUR CODES							
B	Black	R	Red	LG	Light Green	K	Pink
N	Brown	O	Orange	U	Blue	W	White
LN	Light Brown	Y	Yellow	TQ	Turquoise		
S	Slate	G	Green	P	Purple		

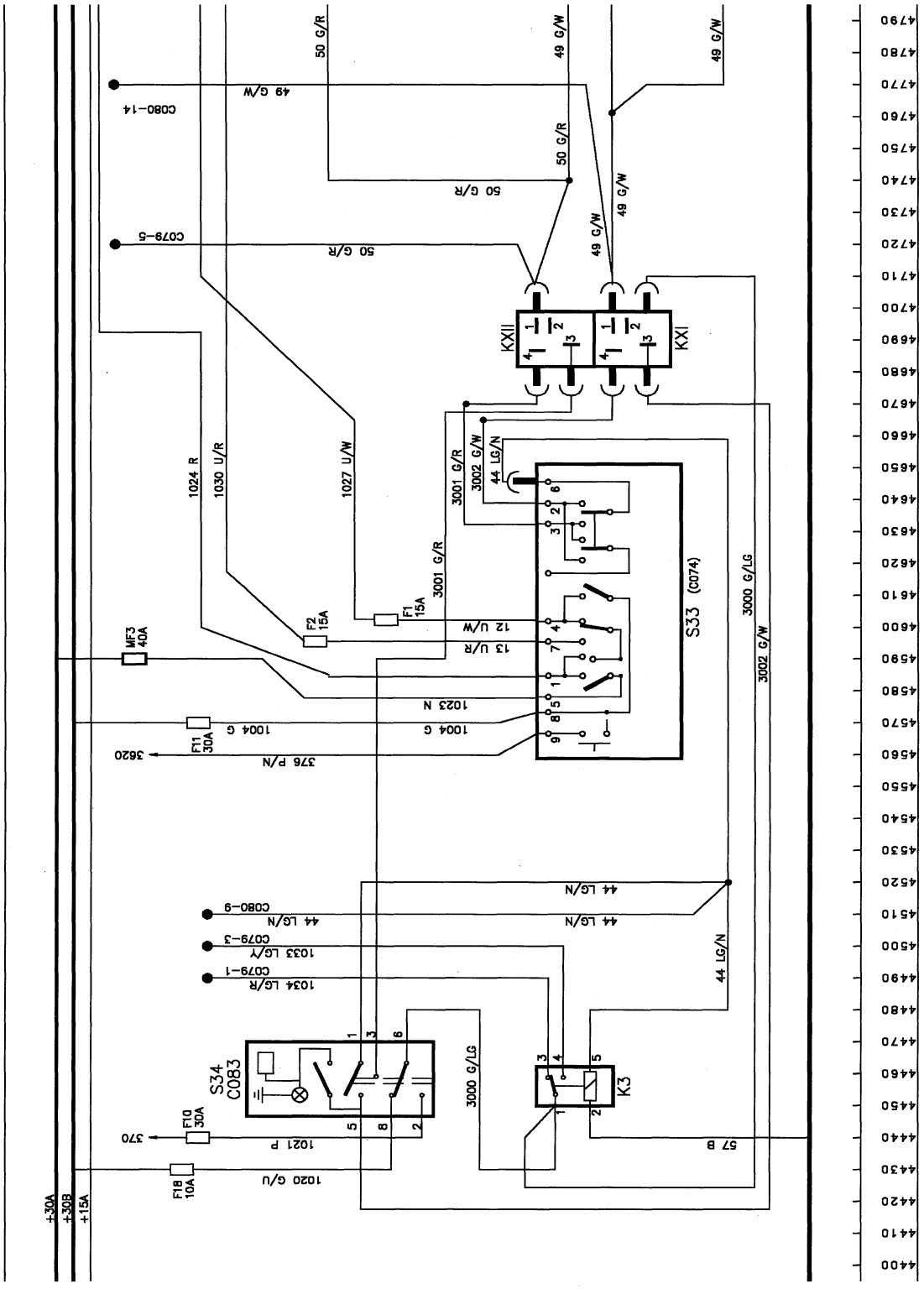
50 G/R
49 G/W
C080-14
C079-5
KXII
KXI
1024 R
1030 U/R
1027 U/W
3001 G/R
3002 G/W
44 LG/N
S33 (C074)
F1 15A
F2 15A
MF3 40A
12 U/W
13 U/R
1023 N
1004 G
F11 30A
376 P/N
3620
3000 G/LG
3002 G/W
C080-9
C079-3
C079-1
1033 LG/Y
1034 LG/R
S34 C083
K3
F10 30A
370
1021 P
F18 10A
1020 G/U
57 B
+30A
+30B
+15A

INDICATOR AND HAZARD LIGHTS
Line 4400-4790

F1 15A Headlamp dip fuse
F2 15A Headlamp main fuse
F10 15A Hazards fuse
F11 30A Horn, flashers, cigar lighter, beacon fuse
F18 10A Indicators fuse

K3 Flasher unit relay

KXI + Flasher mode relay
KXII

MF3 Maxi fuse 3, 40A

S33 Indicator switch
S34 Hazard light switch

WIRE COLOUR CODES							
B	Black	R	Red	LG	Light Green	K	Pink
N	Brown	O	Orange	U	Blue	W	White
LN	Light Brown	Y	Yellow	TQ	Turquoise		
S	Slate	G	Green	P	Purple		

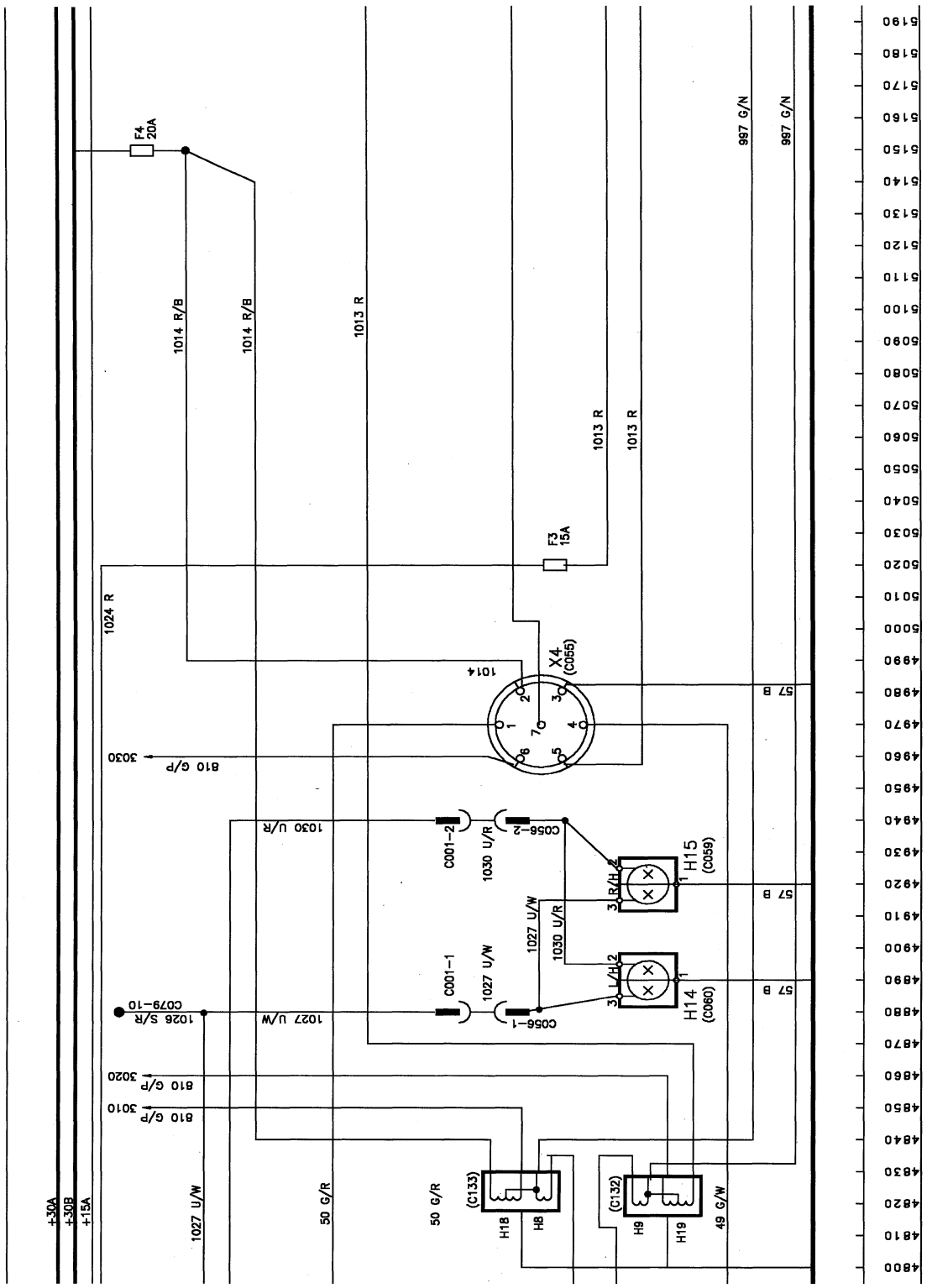
F4
20A
F3
15A
1014 R/B
1014 R/B
1013 R
1013 R
1013 R
997 G/N
997 G/N
1024 R
X4
(C055)
1014
810 G/P
3030
1030 U/R
C001-2
1030 U/R
C056-2
H15
(C059)
1027 U/W
1030 U/R
C001-1
1027 U/W
1027 U/W
C056-1
H14
(C060)
1026 S/R
C079-10
810 G/P
3020
810 G/P
3010
+30A
+30B
+15A
1027 U/W
50 G/R
50 G/R
(C133)
H18
H8
(C132)
H9
H19
49 G/W
57 B
57 B
57 B

MAIN LIGHTS
Line 4800-5190

F3 15A Right hand side lamp fuse
F4 15A Left hand side lamp fuse

H8 Left hand rear indicator lamp, ISO
H9 Right hand rear indicator lamp, ISO
H14 Left hand headlamp
H15 Right hand headlamp
H18 Left hand rear brake lamp
H19 Right hand rear brake lamp

X4 Trailer socket

WIRE COLOUR CODES							
B	Black	R	Red	LG	Light Green	K	Pink
N	Brown	O	Orange	U	Blue	W	White
LN	Light Brown	Y	Yellow	TQ	Turquoise		
S	Slate	G	Green	P	Purple		

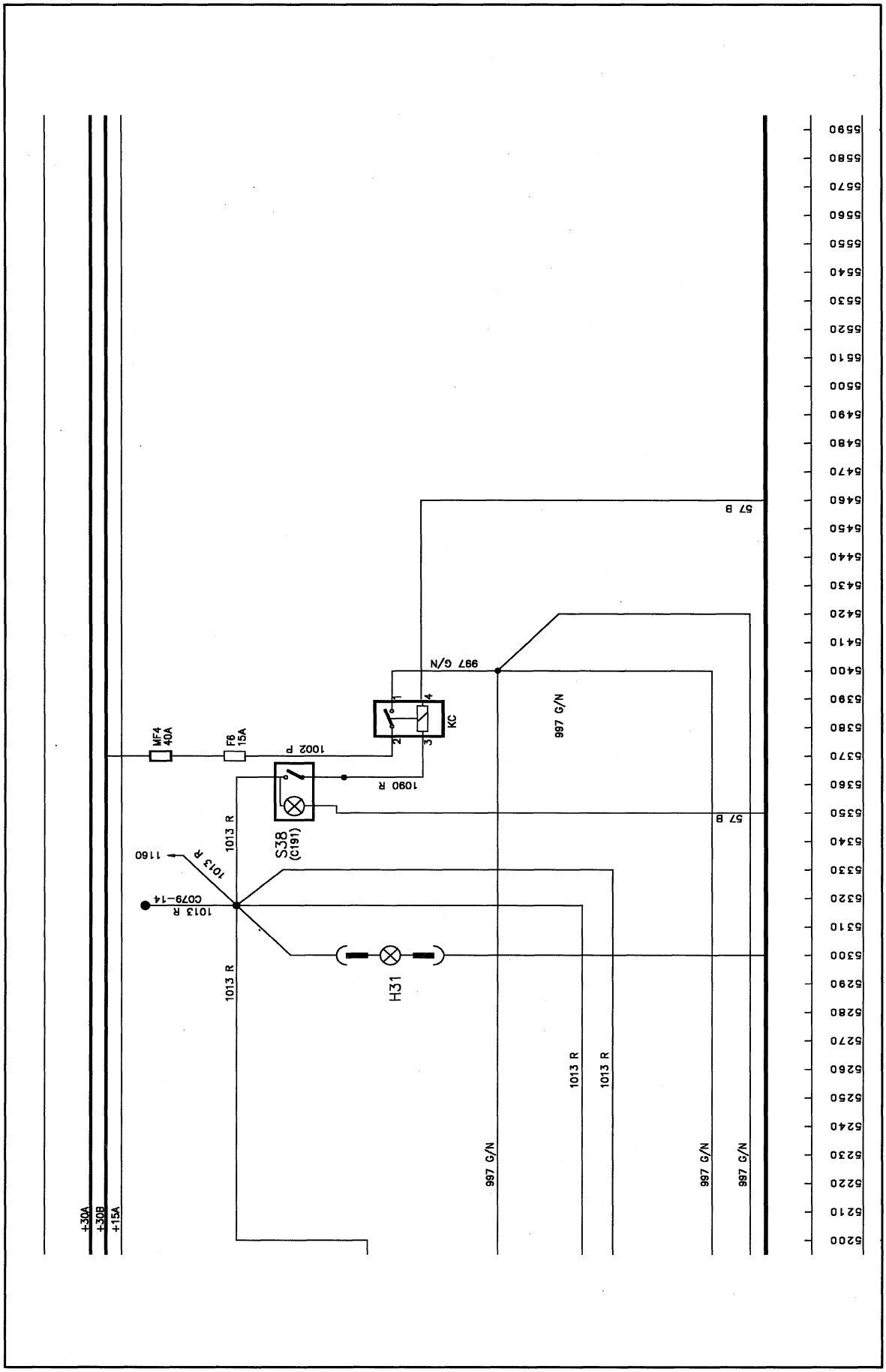
+30A
+30B
+15A
WF4
40A
F6
15A
1002 P
1090 R
KC
S38
(C191)
1160
1013 R
C079-14
H31
997 G/N
57 B

WORKLAMPS
Line 5200-5590

F6 15A Rear fender worklamps fuse

H31 Licence plate lamp

KC Rear worklamp relay

MF4 Maxi fuse 4, 40A

S38 Rear worklamp switch

WIRE COLOUR CODES							
B	Black	R	Red	LG	Light Green	K	Pink
N	Brown	O	Orange	U	Blue	W	White
LN	Light Brown	Y	Yellow	TQ	Turquoise		
S	Slate	G	Green	P	Purple		

+30A
+30B
+15A

5600
5610
5620
5630
5640
5650
5660
5670
5680
5690
5700
5710
5720
5730
5740
5750
5760
5770
5780
5790
5800
5810
5820
5830
5840
5850
5860
5870
5880
5890
5900
5910
5920
5930
5940
5950
5960
5970
5980
5990

Not applicable to this model

WORKLAMPS
Line 5600-5990

WIRE COLOUR CODES							
B	Black	R	Red	LG	Light Green	K	Pink
N	Brown	O	Orange	U	Blue	W	White
LN	Light Brown	Y	Yellow	TQ	Turquoise		
S	Slate	G	Green	P	Purple		

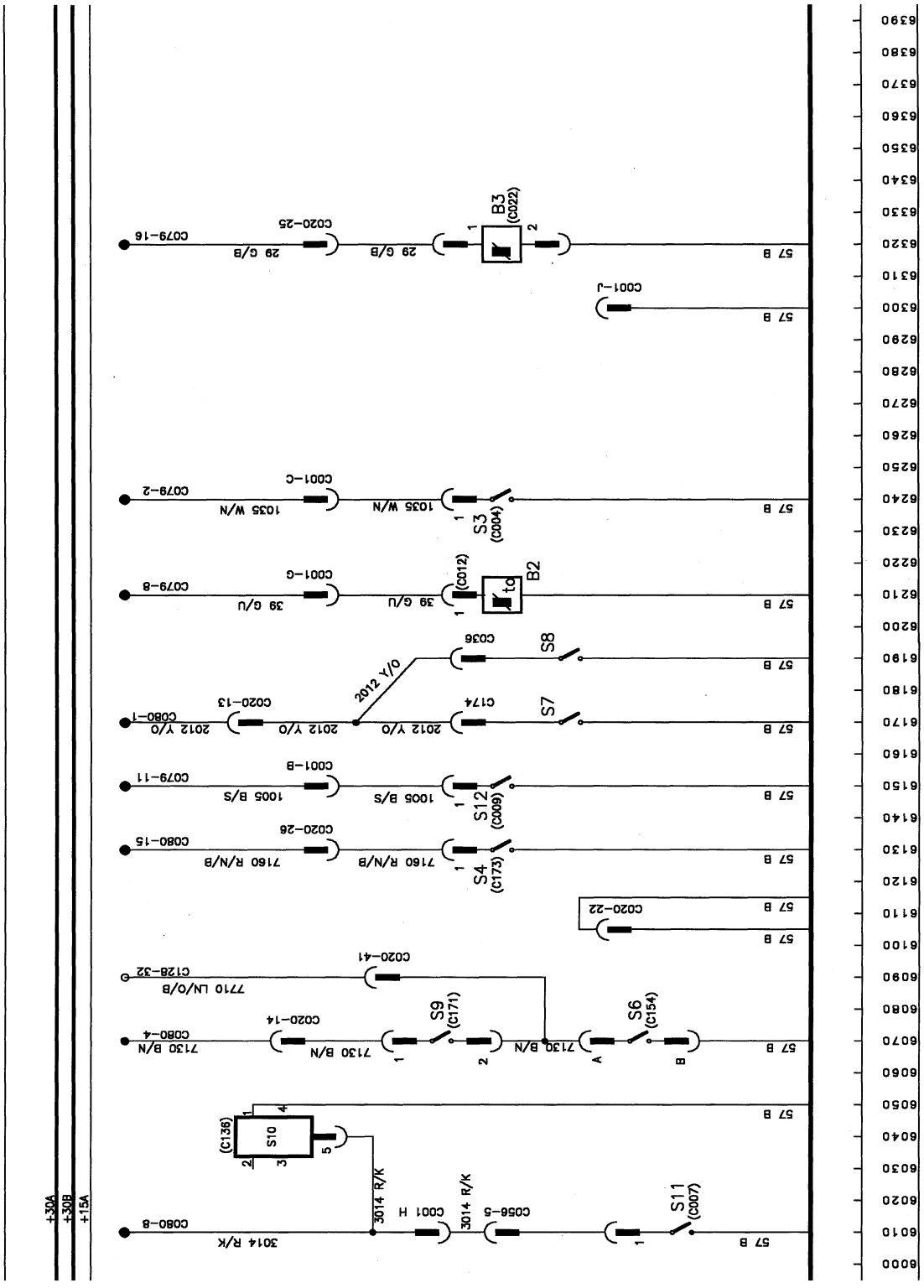
+30A
+30B
+15A
B3 (C022)
B2
S3 (C004)
S8
S7
S12 (C009)
S4 (C173)
S9 (C171)
S6 (C154)
S10 (C136)
S11 (C007)
C079-16
C020-25
29 G/B
C001-J
C079-2
C001-C
1035 W/N
C079-8
C001-G
39 G/U
C012
C036
C174
2012 Y/O
C080-1
C020-13
C079-11
C001-B
1005 B/S
C079-15
C020-26
7160 R/N/B
C020-22
C020-41
C128-32
7710 LN/O/B
C020-14
C080-4
7130 B/N
3014 R/K
C080-8
C001 H
C056-5
57 B
6390
6380
6370
6360
6350
6340
6330
6320
6310
6300
6290
6280
6270
6260
6250
6240
6230
6220
6210
6200
6190
6180
6170
6160
6150
6140
6130
6120
6110
6100
6090
6080
6070
6060
6050
6040
6030
6020
6010
6000

SENSORS
Line 6000-6390

B2 Engine coolant temperature sender
B3 Fuel tank sender

S3 Engine oil pressure switch
S4 Low charge pressure switch (CCLS)
S6 Hydraulic filter blocked switch
S7 Steering pressure switch
S8 Transmission pressure switch
S9 Transmission oil temperature switch
S10 Handbrake switch
S11 Brake fluid level switch
S12 Air filter vacuum switch

WIRE COLOUR CODES							
B	Black	R	Red	LG	Light Green	K	Pink
N	Brown	O	Orange	U	Blue	W	White
LN	Light Brown	Y	Yellow	TQ	Turquoise		
S	Slate	G	Green	P	Purple		

Not applicable to this model

WASHERS AND WIPERS
Line 6400-6790

WIRE COLOUR CODES							
B	Black	R	Red	LG	Light Green	K	Pink
N	Brown	O	Orange	U	Blue	W	White
LN	Light Brown	Y	Yellow	TQ	Turquoise		
S	Slate	G	Green	P	Purple		

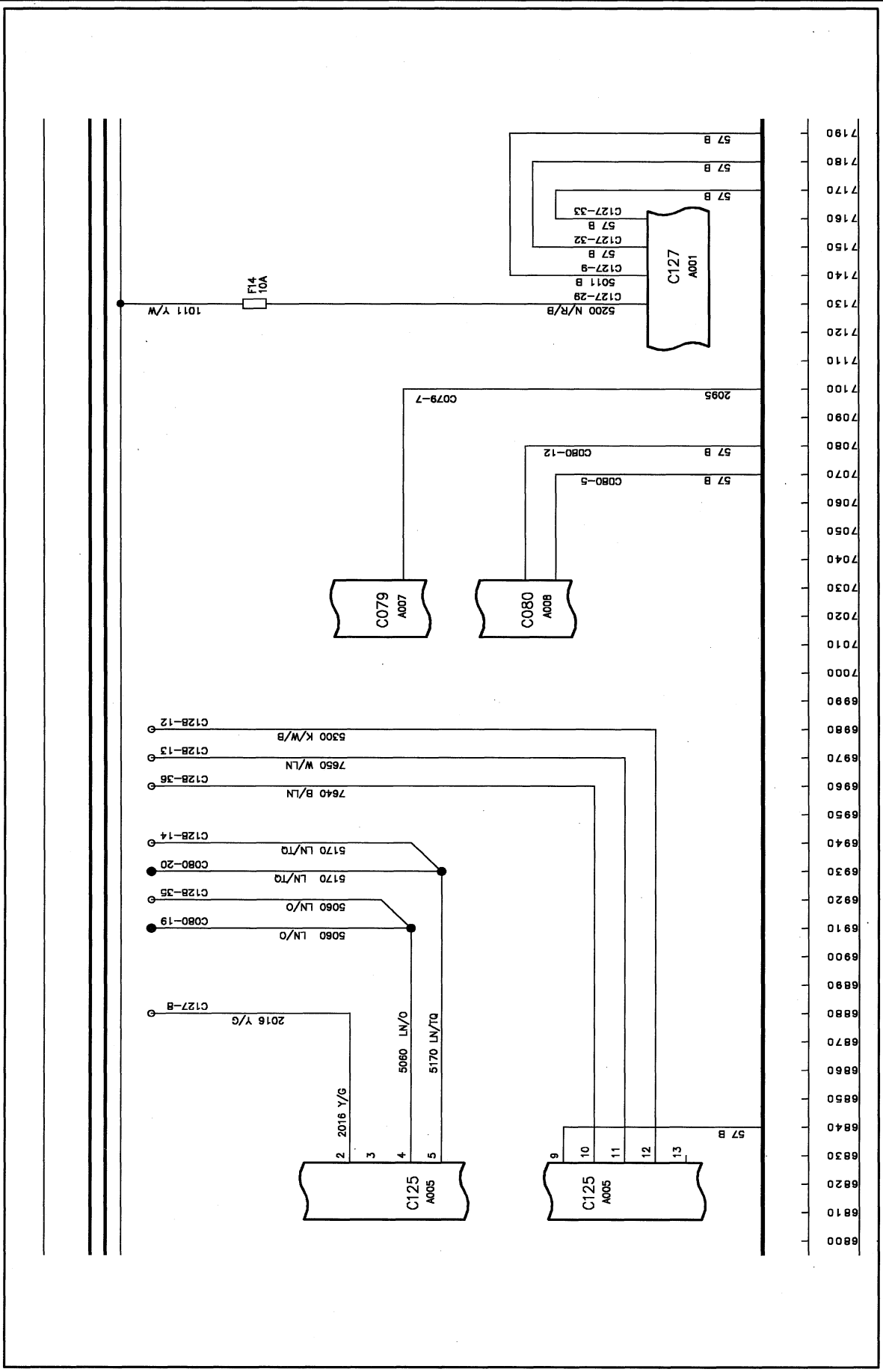
C127
A001
C079
A007
C080
A008
C125
A005
C125
A005
F14
10A
1011 Y/W
5200 N/R/B
2095
C079-7
C080-12
C080-5
C128-12
5300 K/W/B
C128-13
7650 W/LN
C128-36
7640 B/LN
C128-14
5170 LN/TQ
C080-20
5170 LN/TQ
C128-35
5060 LN/O
C080-19
5060 LN/O
C127-8
2016 Y/G
5060 LN/O
5170 LN/TQ
57 B
C127-33
C127-32
C127-9
5011 B
C127-29

PROCESSOR FEEDS AND GROUNDS
Line 6800-7190

A001 Transmission / EDC Processor
A005 Diagnostic plug
A007 Instrument cluster
A008 Instrument cluster

F14 10A, EDC processor feed

WIRE COLOUR CODES							
B	Black	R	Red	LG	Light Green	K	Pink
N	Brown	O	Orange	U	Blue	W	White
LN	Light Brown	Y	Yellow	TQ	Turquoise		
S	Slate	G	Green	P	Purple		

+30A
+30B
+15A

7200
7210
7220
7230
7240
7250
7260
7270
7280
7290
7300
7310
7320
7330
7340
7350
7360
7370
7380
7390
7400
7410
7420
7430
7440
7450
7460
7470
7480
7480
7490
7500
7510
7520
7530
7540
7550
7560
7570
7580
7590

Not applicable to this model

AIR CONDITIONING AND CAB HEATING
Line 6460-6860

WIRE COLOUR CODES							
B	Black	R	Red	LG	Light Green	K	Pink
N	Brown	O	Orange	U	Blue	W	White
LN	Light Brown	Y	Yellow	TQ	Turquoise		
S	Slate	G	Green	P	Purple		

NOTES PAGE

WIRING DIAGRAMS:

TS SERIES: Dual Command Transmission, (24x24) W/Cab,

Wiring Diagrams	Circuit Description	Line Reference Range
Circuit 1	Starting, Charging, Thermostart, Fuel Injection Pump	0-390
Circuit 2	Transmission Circuits	400-1590
Circuit 3	Electronic Draft Control	1600-2790
Circuit 4	Four Wheel Drive and Differential Lock	2800-3190
Circuit 5	Power Take Off	3200-3590
Circuit 6	Cab Accessories	3600-4390
Circuit 7	Main Lamps, Indicators & Hazards	4400-5190
Circuit 8	Work Lamps	5200-5990
Circuit 9	Sensors / Senders	6000-6390
Circuit 10	Wipers & Washers	6400-6790
Circuit 11	Processor Feed and Ground connections	6800-7190
Circuit 12	Air-Conditioning & Heating	7200-7590

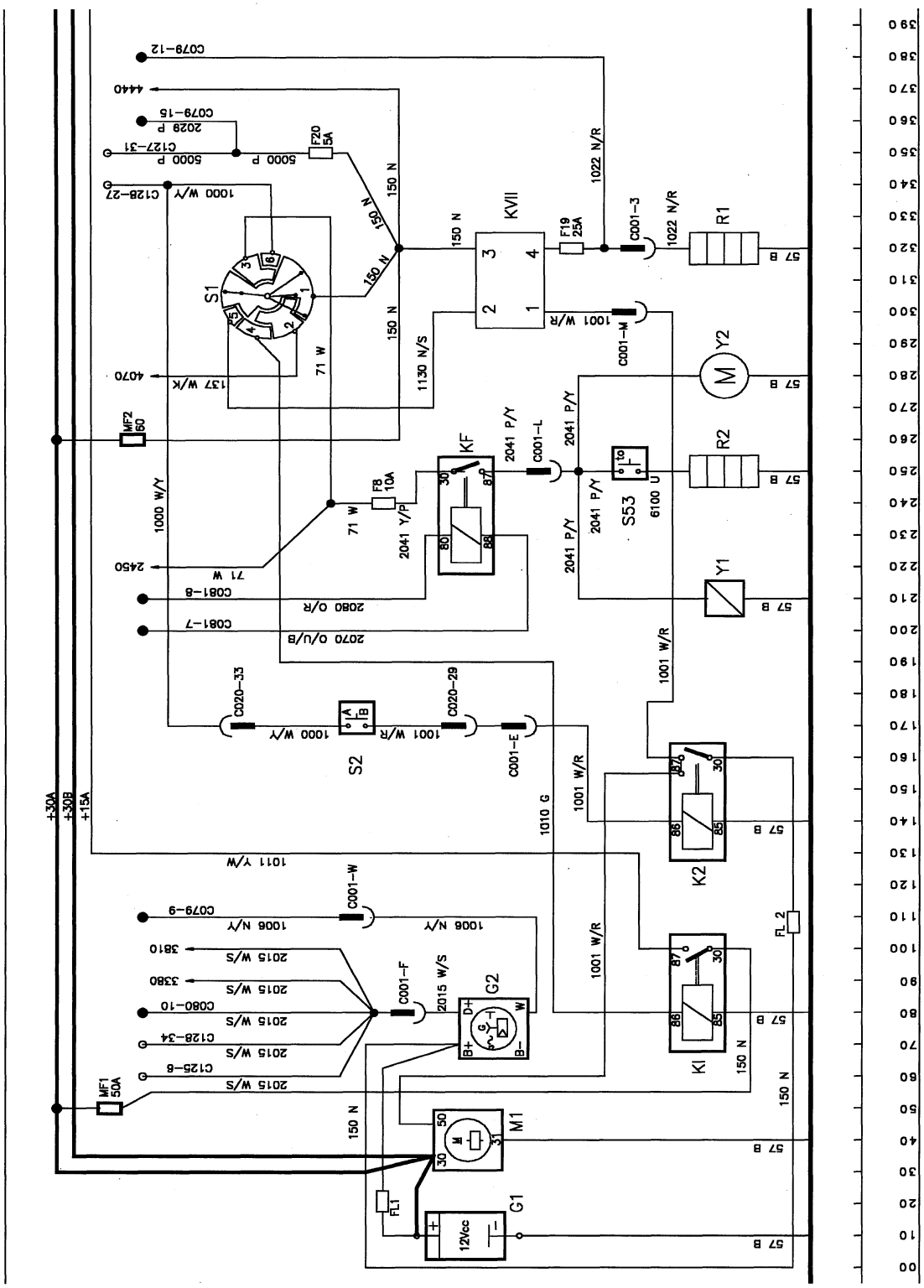
+30A
+30B
+15A
MF2 60
MF1 50A
S1
S2
S53
KF
KVII
K1
K2
R1
R2
Y1
Y2
M1
G1
G2
F20 5A
F19 25A
F8 10A
FL1
FL2
12Vcc
C079-12
C079-15
C127-31
C128-27
C081-8
C081-7
C020-33
C020-29
C001-L
C001-M
C001-E
C001-F
C001-W
C001-3
C080-10
C128-34
C125-6
C079-9
1000 W/Y
1001 W/R
1001 W/K
1001 W/S
1001 W/R
1001 W/R
1001 W/R

STARTING, CHARGING, THERMOSTART, FUEL INJECTION PUMP
line 0-390

STARTING

FL1 Fuse Link
FL2 Fuse Link
G1 Battery
K1 Ignition Relay
K2 Start Relay
M1 Starter Motor and Solenoid
S1 Ignition Switch
S2 Start inhibitor switch

CHARGING

G2 Alternator

THERMOSTART AND FUEL SYSTEM

F8 10A, Shut off Solenoid Fuse
F19 25A Thermostart Fuse
KVII Thermostart relay
KF Fuel Shut Off Relay
R1 Thermostart coil
R2 Fuel Injection Pump Wax Motor
S53 Thermostatic Switch
Y1 Shut Off Solenoid
Y2 Electric Lift Pump

MF1 Maxi Fuse 1 50A
MF2 Maxi Fuse 2 60A
F20 5A, Processor 'Keep alive memory' Fuse

WIRE COLOUR CODES							
B	Black	R	Red	LG	Light Green	K	Pink
N	Brown	O	Orange	U	Blue	W	White
LN	Light Brown	Y	Yellow	TQ	Turquoise		
S	Slate	G	Green	P	Purple		

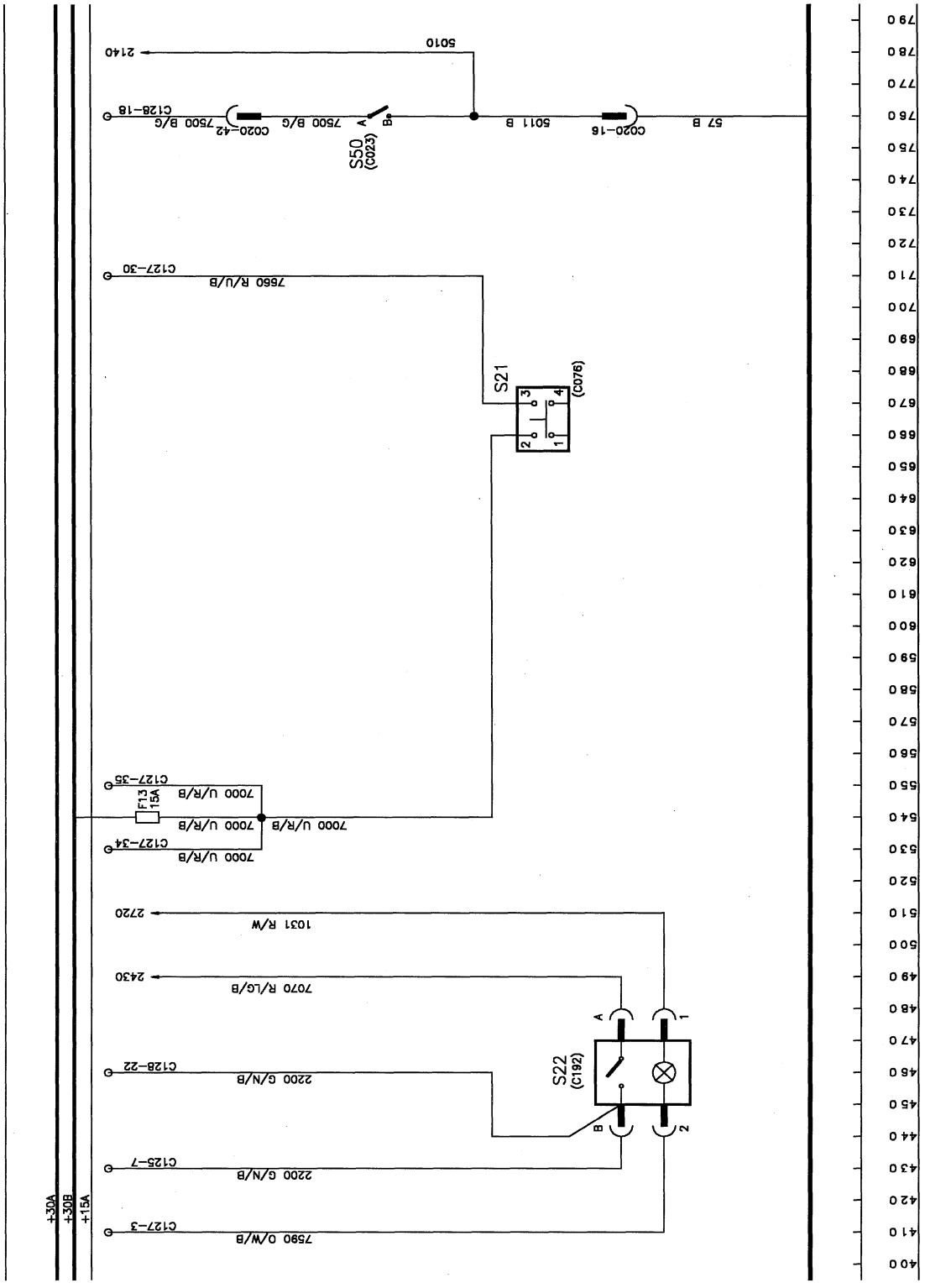
+30A
+30B
+15A
C127-3
7590 O/W/B
C125-7
2200 G/N/B
C128-22
2200 G/N/B
2430
7070 R/LG/B
2720
1031 R/W
S22
(C192)
A
B
1
2
C127-35
7000 U/R/B
F13
15A
C127-34
7000 U/R/B
7000 U/R/B
7000 U/R/B
C127-30
7660 R/U/B
S21
(C076)
1
2
3
4
2140
C128-18
7500 B/G
C020-42
7500 B/G
S50
(C023)
A
B
5010
5011 B
C020-16
57 B
40
41
42
43
44
45
46
47
48
49
50
51
52
53
54
55
56
57
58
59
60
61
62
63
64
65
66
67
68
69
70
71
72
73
74
75
76
77
78
79

TRANSMISSION SYSTEM
Line 400-790

F13 15A, Transmission Fuse

S21 Clutch Pedal Switch
S22 Creeper Switch
S50 Transmision Oil Temperature Switch

WIRE COLOUR CODES							
B	Black	R	Red	LG	Light Green	K	Pink
N	Brown	O	Orange	U	Blue	W	White
LN	Light Brown	Y	Yellow	TQ	Turquoise		
S	Slate	G	Green	P	Purple		

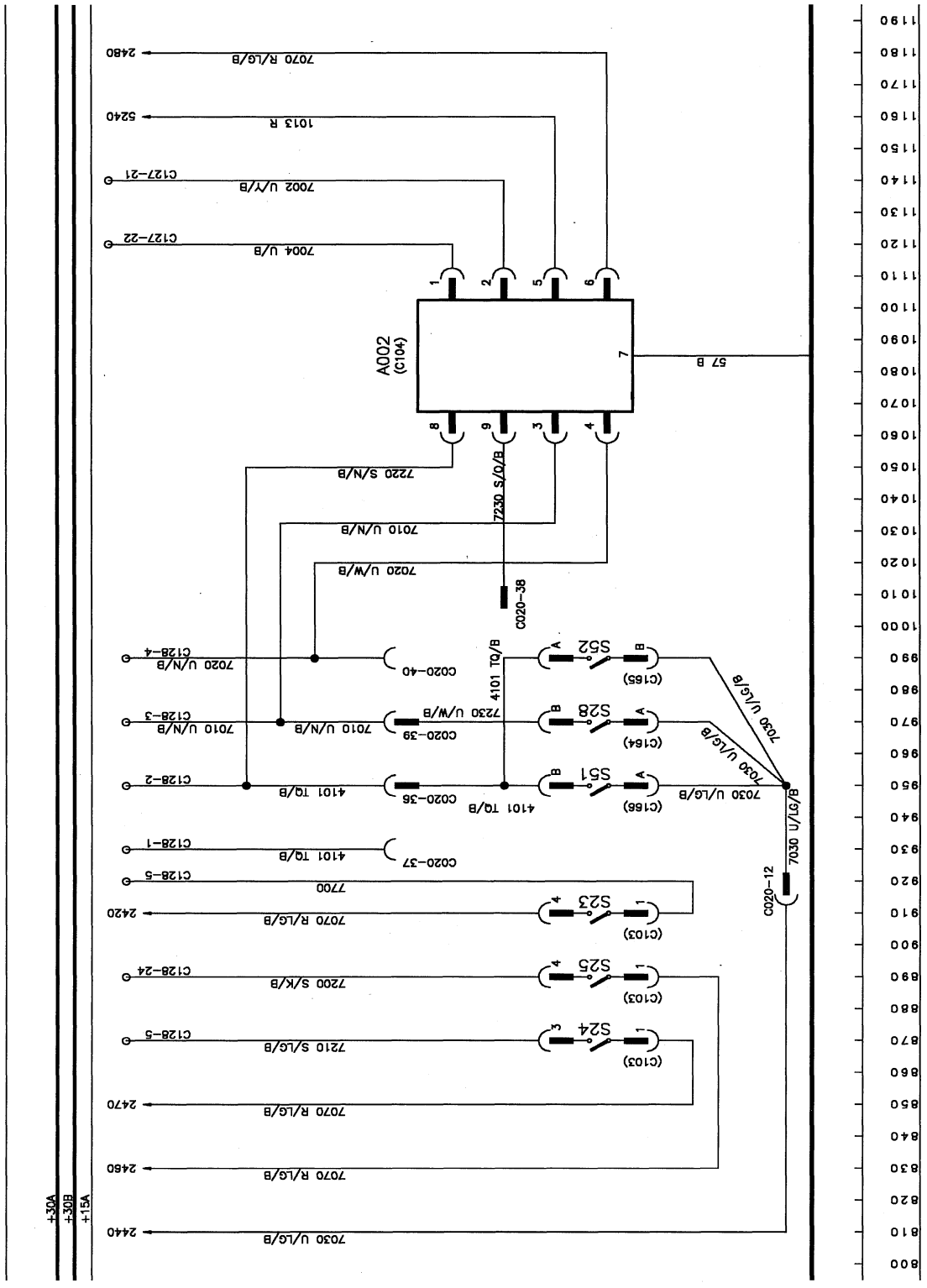
+30A
+30B
+15A
2480
7070 R/LG/B
5240
1013 R
C127-21
7002 U/Y/B
C127-22
7004 U/B
A002
(C104)
57 B
7220 S/N/B
7230 S/O/B
7010 U/N/B
7020 U/W/B
C020-38
S52
(C165)
S28
(C164)
S51
(C166)
4101 TQ/B
7030 U/LG/B
C020-12
C020-40
C020-39
C020-36
C020-37
C128-4
C128-3
C128-2
C128-1
C128-5
C128-24
7700
S23
(C103)
S25
(C103)
S24
(C103)
2420
2470
2450
2440
7200 S/K/B
7210 S/LG/B

TRANSMISSION SYSTEM
Line 800-1190

A002 Gear Display Module (Not fitted to Dual Command Models)

S23 Shuttle dump switch
S24 Upshift switch
S25 Downshift switch
S28 High/medium range switch
S51 1st/2nd switch
S52 3rd/4th switch

WIRE COLOUR CODES							
B	Black	R	Red	LG	Light Green	K	Pink
N	Brown	O	Orange	U	Blue	W	White
LN	Light Brown	Y	Yellow	TQ	Turquoise		
S	Slate	G	Green	P	Purple		

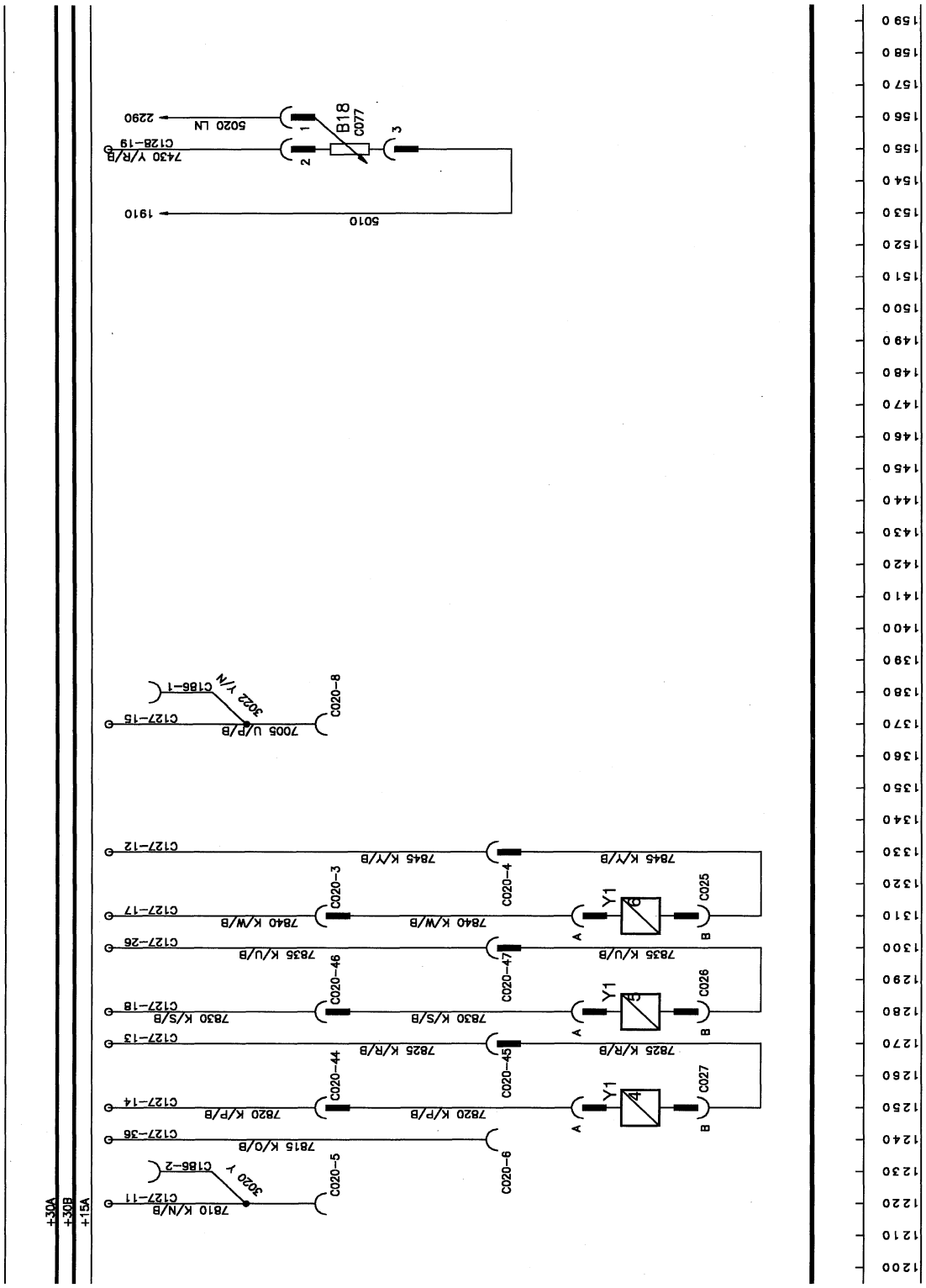
B18
C077
5020 LN
2290
7430 Y/R/B
C128-19
1910
5010
3022 Y/N
C186-1
7005 U/P/B
C127-15
C020-8
C127-12
7845 K/Y/B
C020-4
C020-3
C127-17
7840 K/W/B
Y1
C025
C127-26
7835 K/U/B
C020-47
C020-46
C127-18
7830 K/S/B
C026
C127-13
7825 K/R/B
C020-45
C020-44
C127-14
7820 K/P/B
C027
C127-36
7815 K/O/B
C020-6
C020-5
3020 Y
C186-2
C127-11
7810 K/N/B
+30A
+30B
+15A

TRANSMISSION SYSTEM
Line 1200-1590

B18 Clutch pedal potentiometer

Y14 Dump solenoid
Y15 Lo PWM valve
Y16 Hi PWM valve

WIRE COLOUR CODES							
B	Black	R	Red	LG	Light Green	K	Pink
N	Brown	O	Orange	U	Blue	W	White
LN	Light Brown	Y	Yellow	TQ	Turquoise		
S	Slate	G	Green	P	Purple		

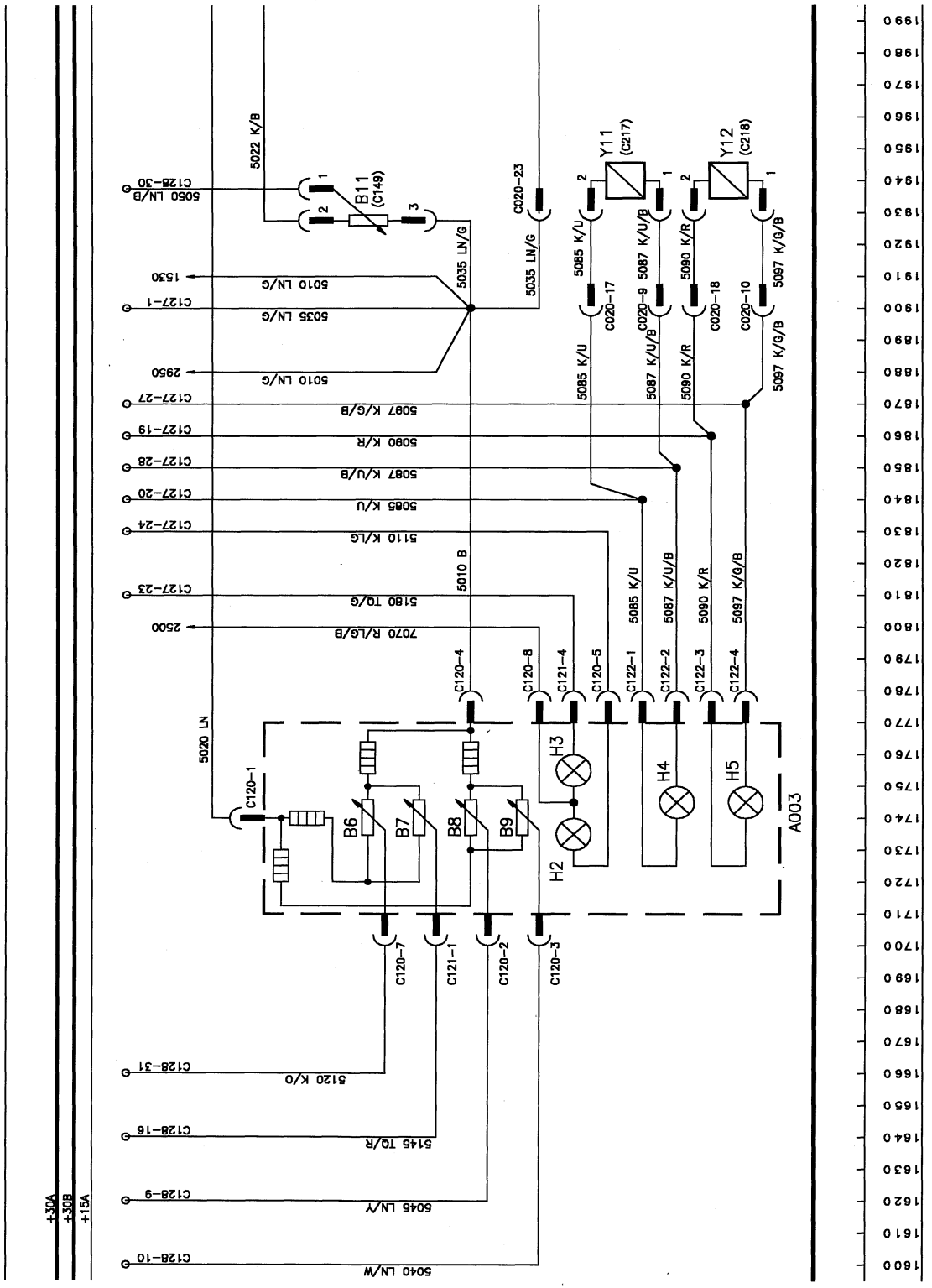
+30A
+30B
+15A
5022 K/B
B11 (C149)
C128-30
5050 LN/B
1530
5010 LN/G
C127-1
5035 LN/G
2950
5010 LN/G
C127-27
5087 K/G/B
C127-19
5090 K/R
C127-28
5087 K/U/B
C127-20
5085 K/U
C127-24
5110 K/LG
C127-23
5180 TQ/G
2500
7070 R/LG/B
5010 B
5035 LN/G
C020-23
Y11 (C217)
Y12 (C218)
5085 K/U
5087 K/U/B
5090 K/R
5097 K/G/B
C020-17
C020-9
C020-18
C020-10
5020 LN
C120-1
B6
B7
B8
B9
H2
H3
H4
H5
A003
C120-4
C120-8
C121-4
C120-5
C122-1
C122-2
C122-3
C122-4
C120-7
C121-1
C120-2
C120-3
C128-31
5120 K/O
C128-16
5145 TQ/R
C128-9
5045 LN/Y
C128-10
5040 LN/W
1990
1980
1970
1960
1950
1940
1930
1920
1910
1900
1890
1880
1870
1860
1850
1840
1830
1820
1810
1800
1790
1780
1770
1760
1750
1740
1730
1720
1710
1700
1690
1680
1670
1660
1650
1640
1630
1620
1610
1600

ELECTRONIC DRAFT CONTROL
Line 1600-1990

A003	EDC Panel	**H2**	Status Lamp
		H3	Slip Lamp
B6	Height Limit Potentiometer	**H4**	Raise Lamp
B7	Slip Limit Potentiometer	**H5**	Lower Lamp
B8	Drop Rate Potentiometer		
B9	Draft / position Potentiometer	**Y11**	Raise Solenoid
B11	Lift lever potentiometer	**Y12**	Lower Solenoid

WIRE COLOUR CODES							
B	Black	R	Red	LG	Light Green	K	Pink
N	Brown	O	Orange	U	Blue	W	White
LN	Light Brown	Y	Yellow	TQ	Turquoise		
S	Slate	G	Green	P	Purple		

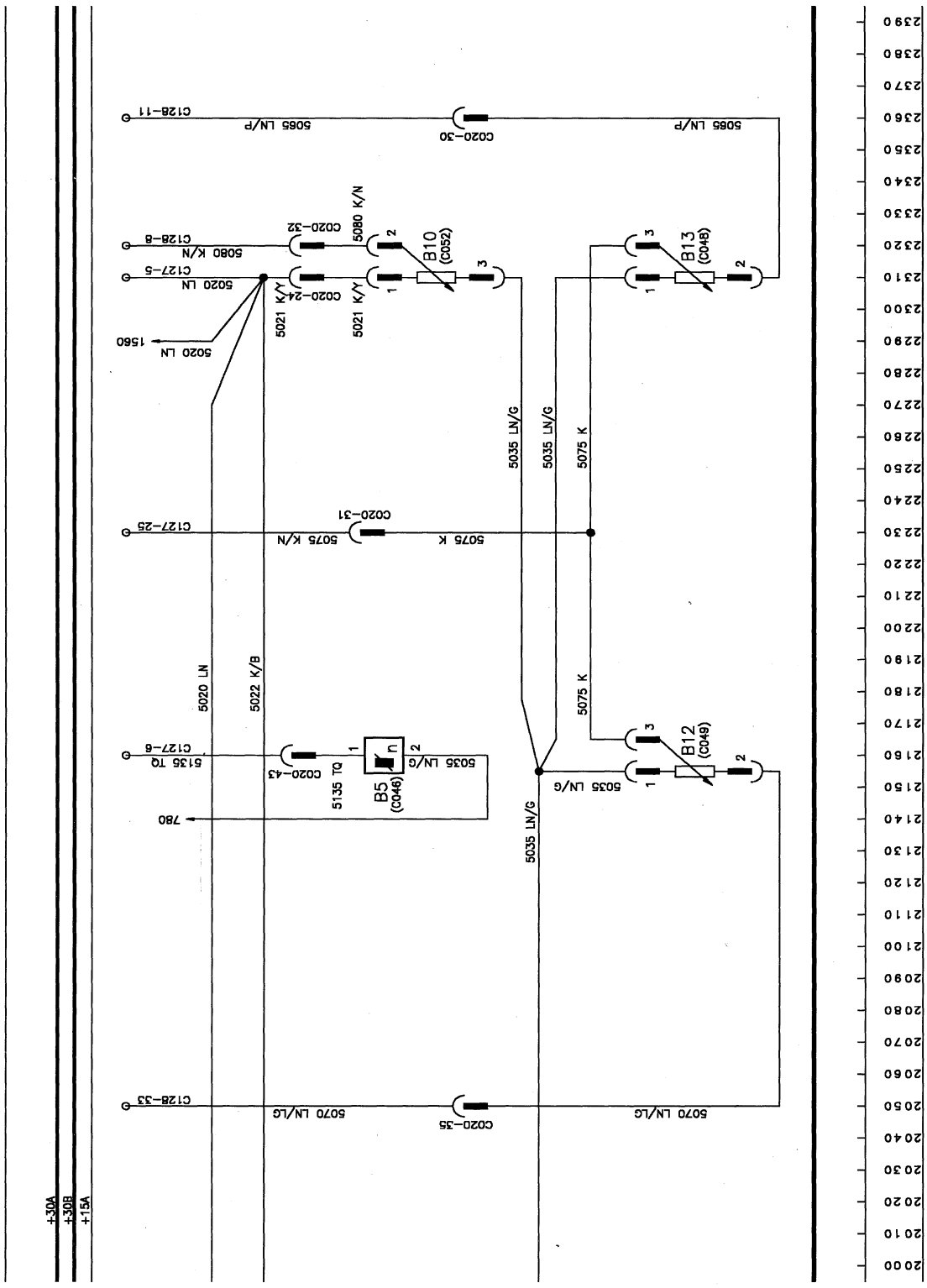
+30A
+30B
+15A
C128-11
5085 LN/P
C020-30
B10 (C052)
B13 (C048)
B12 (C049)
B5 (C046)
5080 K/N
C020-32
C128-8
C127-5
5020 LN
C020-24
5021 K/Y
1560
5035 LN/G
5075 K
C127-25
C020-31
5075 K/N
5020 LN
5022 K/B
C127-6
5135 TQ
C020-43
780
C128-33
5070 LN/LG
C020-35

ELECTRONIC DRAFT CONTROL
Line 2000-2390

B5 Axle speed sensor
B10 Lift arm shaft potentiometer
B12 Draft pin left
B13 Draft pin right

WIRE COLOUR CODES							
B	Black	R	Red	LG	Light Green	K	Pink
N	Brown	O	Orange	U	Blue	W	White
LN	Light Brown	Y	Yellow	TQ	Turquoise		
S	Slate	G	Green	P	Purple		

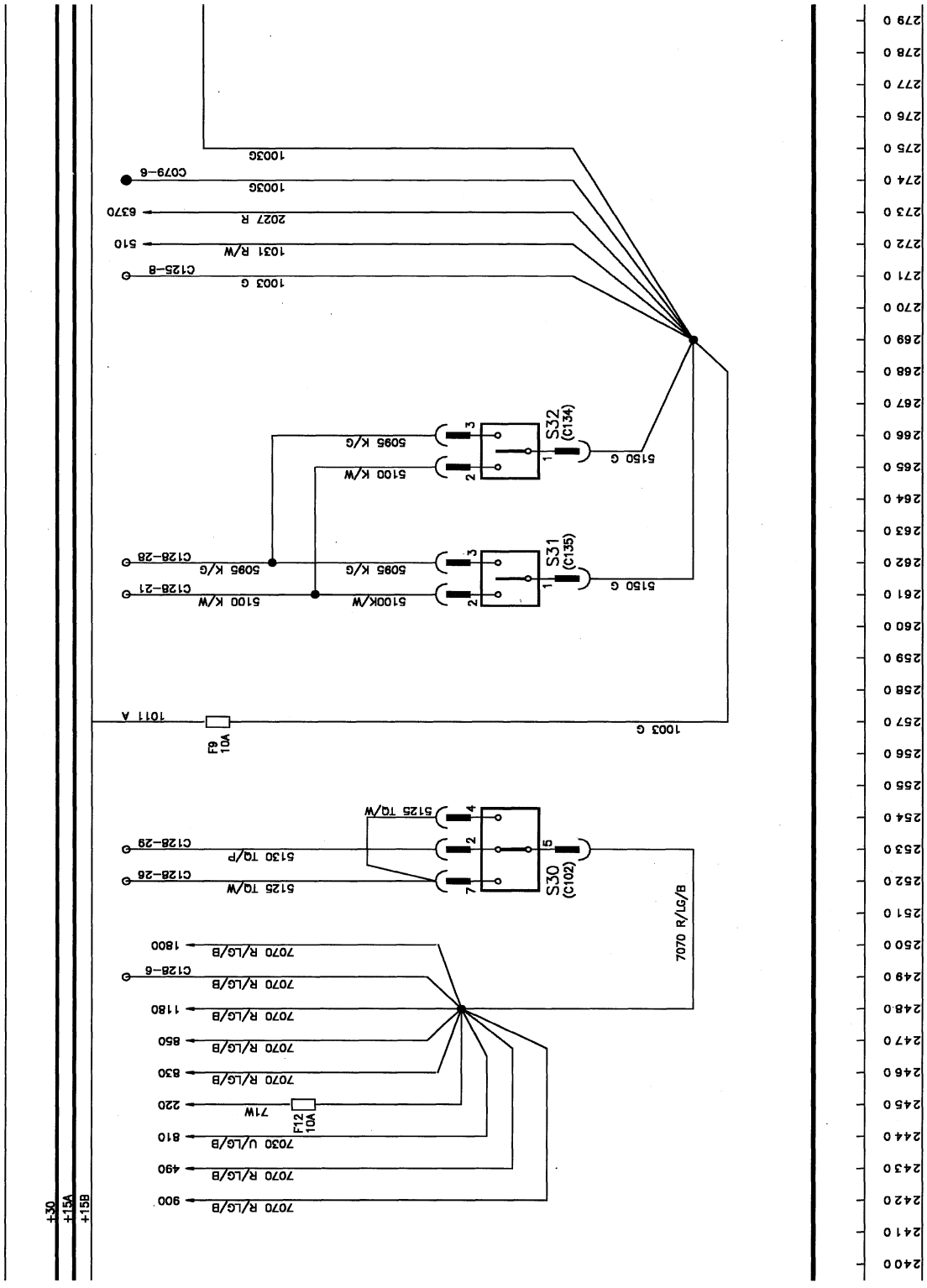
S32
(C134)
S31
(C135)
S30
(C102)
F9
10A
F12
10A
1003G
C079-6
6370
2027 R
510
1031 R/W
C125-8
1003 G
5095 K/G
5100 K/W
5150 G
C128-28
C128-21
1011 A
5125 TQ/W
C128-29
5130 TQ/P
C128-26
7070 R/LG/B
1800
C128-6
1180
850
830
220
71W
810
7030 U/LG/B
490
900
+30
+15A
+15B

ELECTRONIC DRAFT CONTROL
Line 2400-2790

F9 10A, Gauges and external switches fuse
F12 10A, EDC fuse

S30 In cab Raise/work switch
S31 Fender switch, left
S32 Fender switch, right

WIRE COLOUR CODES							
B	Black	R	Red	LG	Light Green	K	Pink
N	Brown	O	Orange	U	Blue	W	White
LN	Light Brown	Y	Yellow	TQ	Turquoise		
S	Slate	G	Green	P	Purple		

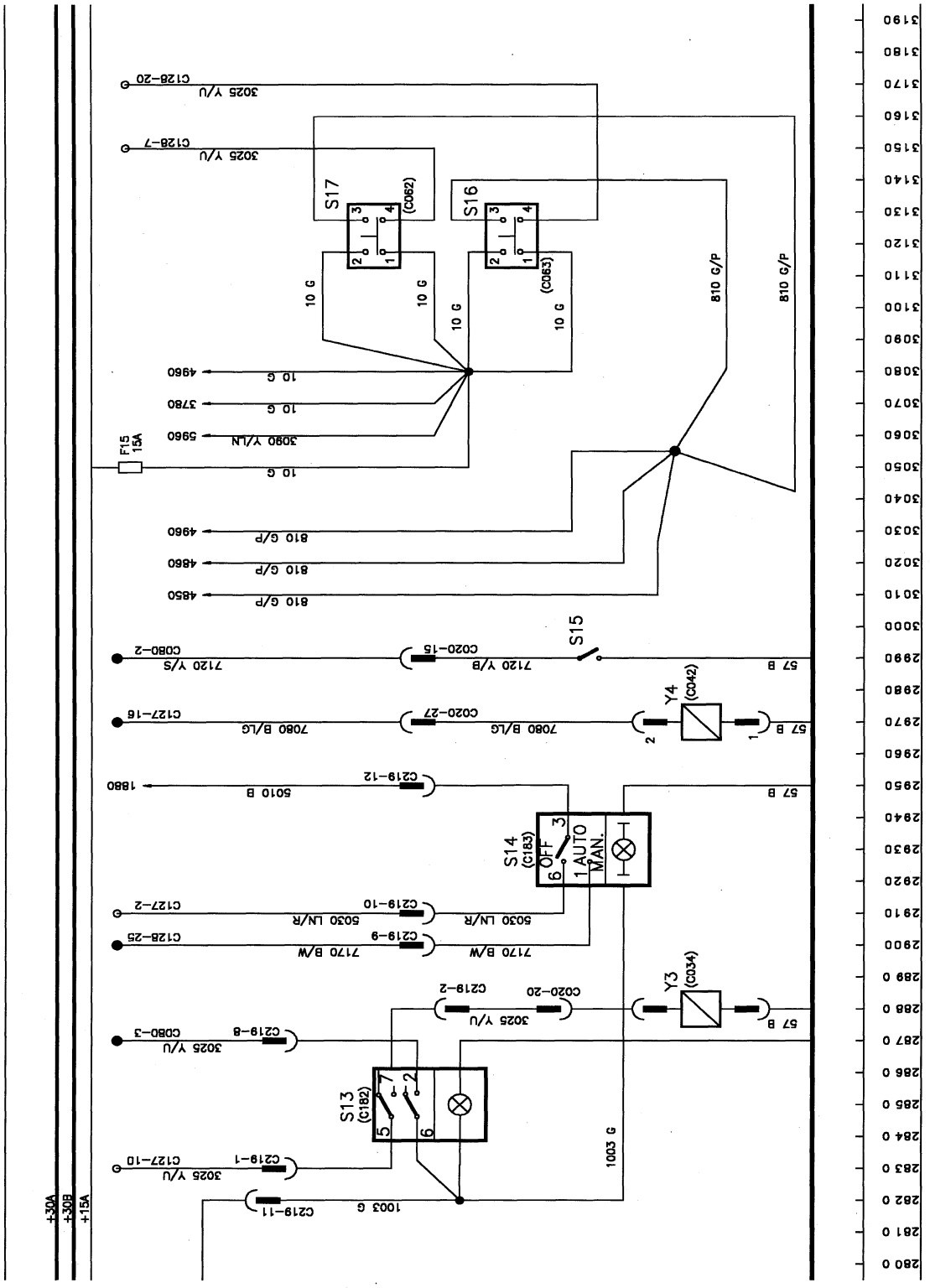
+30A
+30B
+15A
F15
15A
S17
S16
S15
S14
S13
Y4
Y3
(C082)
(C083)
(C183)
(C182)
(C042)
(C034)
OFF
AUTO
MAN.
10 G
810 G/P
3025 Y/U
3080 Y/LN
7120 Y/S
7120 Y/B
7080 B/LG
5010 B
5030 LN/R
7170 B/W
1003 G
57 B
4960
3780
5960
4860
4850
1880
C128-20
C128-7
C128-25
C127-2
C127-10
C127-16
C219-12
C219-10
C219-9
C219-2
C219-8
C219-1
C219-11
C020-15
C020-27
C020-20
C080-2
C080-3
2980
2970
2960
2950
2940
2930
2920
2910
2900
2890
2880
2870
2860
2850
2840
2830
2820
2810
2800
3190
3180
3170
3160
3150
3140
3130
3120
3110
3100
3090
3080
3070
3060
3050
3040
3030
3020
3010
3000

FOUR WHEEL DRIVE AND DIFFERENTIAL LOCK
Line 2800-3190

F15 15A, Stop lamps fuse

S13 FWD, cab switch
S14 Differential, cab switch
S15 Differential Lock Engaged Switch
S16 Brake Switch - Right Hand
S17 Brake Switch - Left Hand

Y3 Four Wheel Drive Solenoid
Y4 Differential Lock Solenoid

WIRE COLOUR CODES							
B	Black	R	Red	LG	Light Green	K	Pink
N	Brown	O	Orange	U	Blue	W	White
LN	Light Brown	Y	Yellow	TQ	Turquoise		
S	Slate	G	Green	P	Purple		

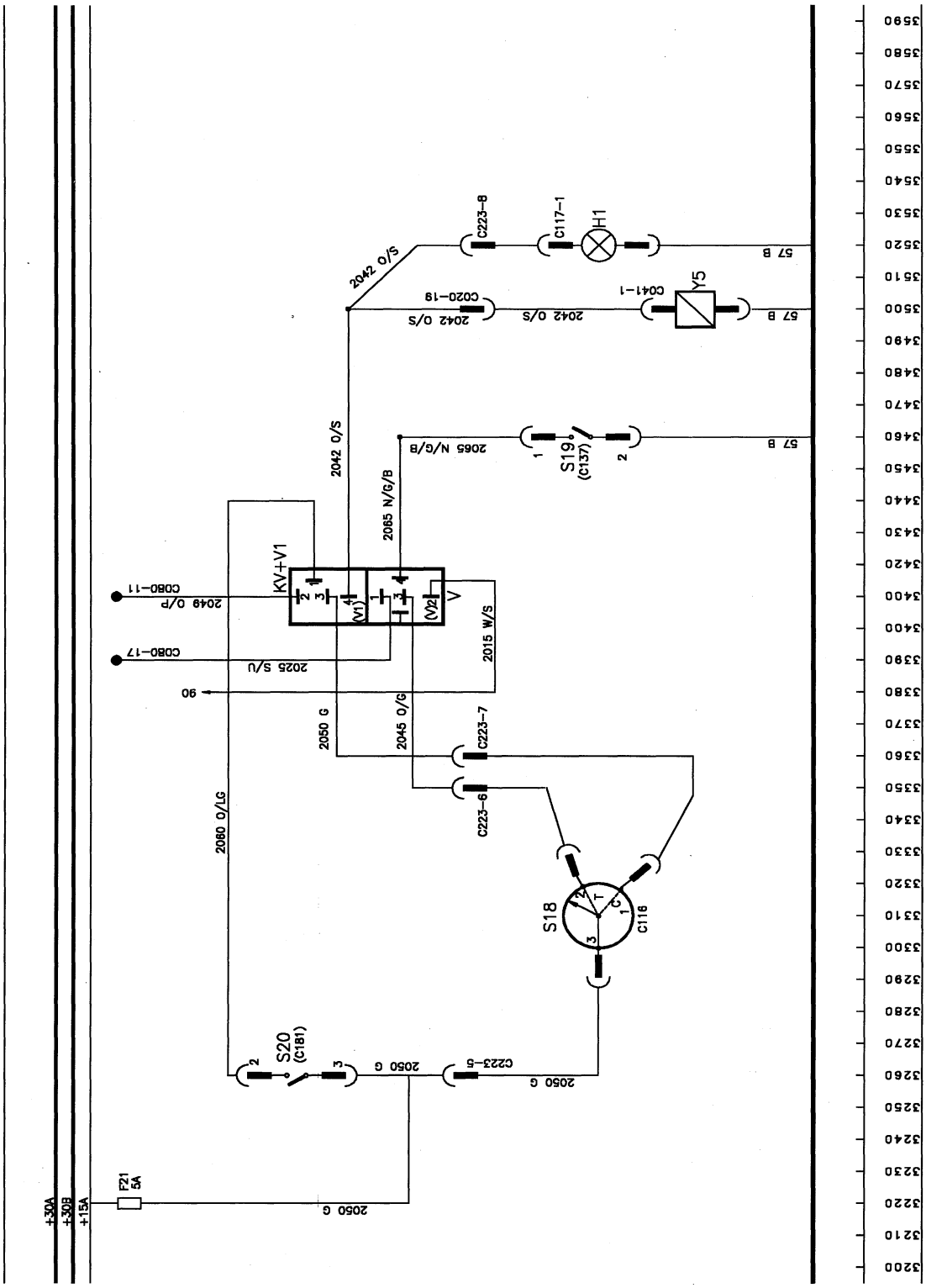

C223-8
C117-1
H1
57 B
2042 O/S
C020-19
2042 O/S
2042 O/S
C041-1
Y5
57 B
2042 O/S
2065 N/G/B
S19
(C137)
57 B
2065 N/G/B
KV+V1
C080-11
2049 O/P
C080-17
2025 S/U
90
2015 W/S
2050 G
2045 O/G
C223-7
C223-6
2060 O/LG
S18
C116
S20
(C181)
2050 G
C223-5
2050 G
F21
5A
+30A
+30B
+15A
2050 G
3590
3580
3570
3560
3550
3540
3530
3520
3510
3500
3490
3480
3470
3460
3450
3440
3430
3420
3400
3400
3390
3380
3370
3360
3350
3340
3330
3320
3310
3300
3290
3280
3270
3260
3250
3240
3230
3220
3210
3200

POWER TAKE OFF
Line 3200-3590

F21	5A, PTO fuse	**S18**	PTO switch
		S19	Seat switch
H1	PTO engaged lamp	**S20**	540/1000 PTO speed switch
KV+V1	PTO Relay	**Y5**	PTO Solenoid

WIRE COLOUR CODES							
B	Black	R	Red	LG	Light Green	K	Pink
N	Brown	O	Orange	U	Blue	W	White
LN	Light Brown	Y	Yellow	TQ	Turquoise		
S	Slate	G	Green	P	Purple		

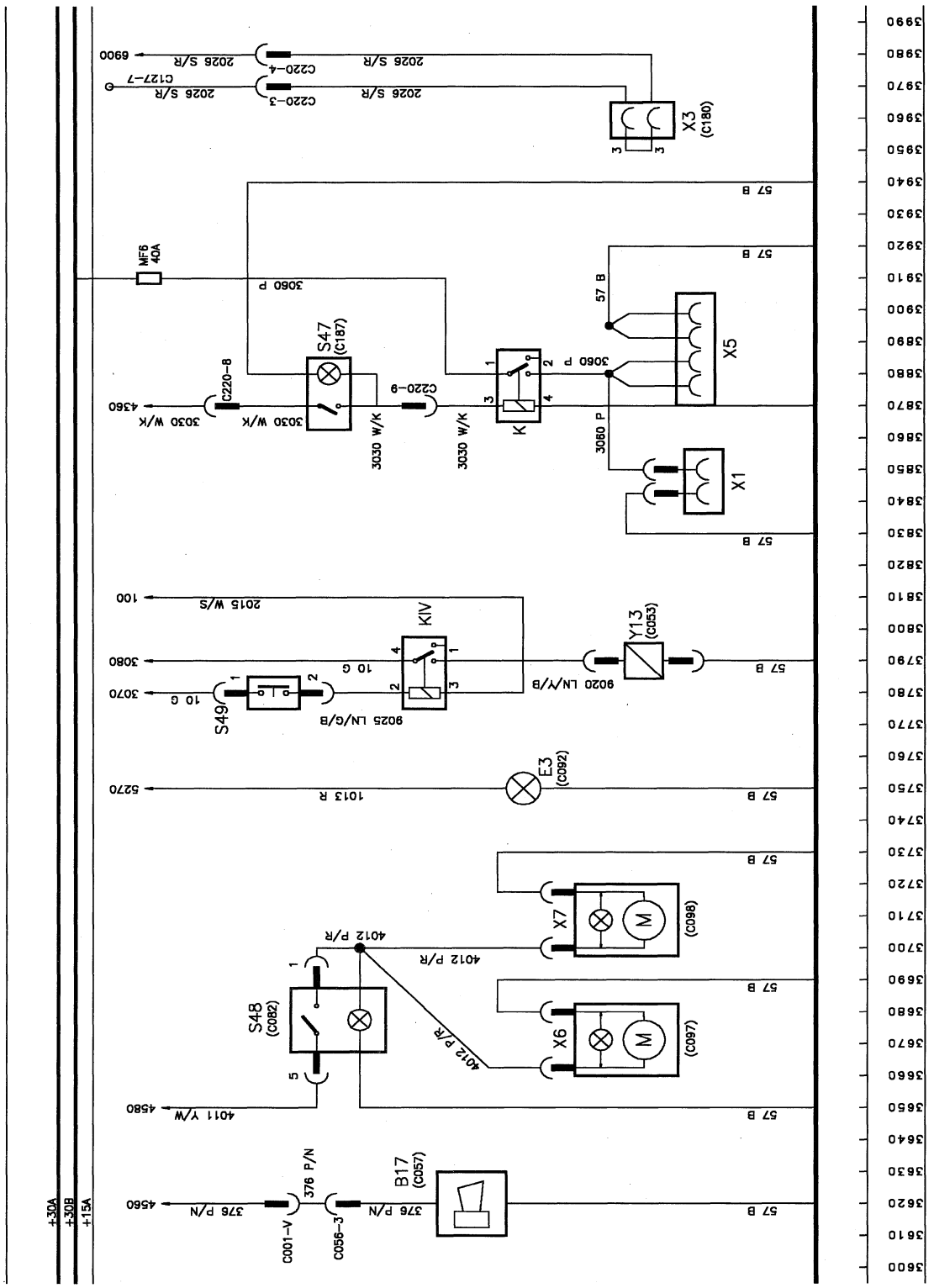
X3 (C180)
2026 S/R
C220-4
C220-3
C127-7
6900
57 B
MF6 40A
3060 P
S47 (C187)
C220-8
C220-9
4360
3030 W/K
K
X5
X1
3060 P
57 B
2015 W/S
100
KIV
Y13 (C053)
3080
3070
10 G
S49
9025 LN/G/B
9020 LN/Y/B
E3 (C092)
5270
1013 R
X7 (C098)
X6 (C097)
4012 P/R
S48 (C082)
4580
4011 Y/W
B17 (C057)
376 P/N
C001-V
C056-3
+30A
+30B
+15A
3990
3980
3970
3960
3950
3940
3930
3920
3910
3900
3890
3880
3870
3860
3850
3840
3830
3820
3810
3800
3790
3780
3770
3760
3750
3740
3730
3720
3710
3700
3690
3680
3670
3660
3650
3640
3630
3620
3610
3600

CAB ACCESSORIES
Line 3600-3990

B17	Horn
E3	Console Light
K	Implement socket relay
KIV	Remote valve relay
MF6	Maxi Fuse 6, 40A
S47	40Amp Accessory terminals switch
S48	Beacon switch
S49	Remote valve switch
X1	40 Amp screw terminal
X3	Implement status socket
X5	4 Pin 40 amp socket
X6	Roof beacon left hand
X7	Roof beacon right hand
Y13	Remote valve solenoid

WIRE COLOUR CODES							
B	Black	R	Red	LG	Light Green	K	Pink
N	Brown	O	Orange	U	Blue	W	White
LN	Light Brown	Y	Yellow	TQ	Turquoise		
S	Slate	G	Green	P	Purple		

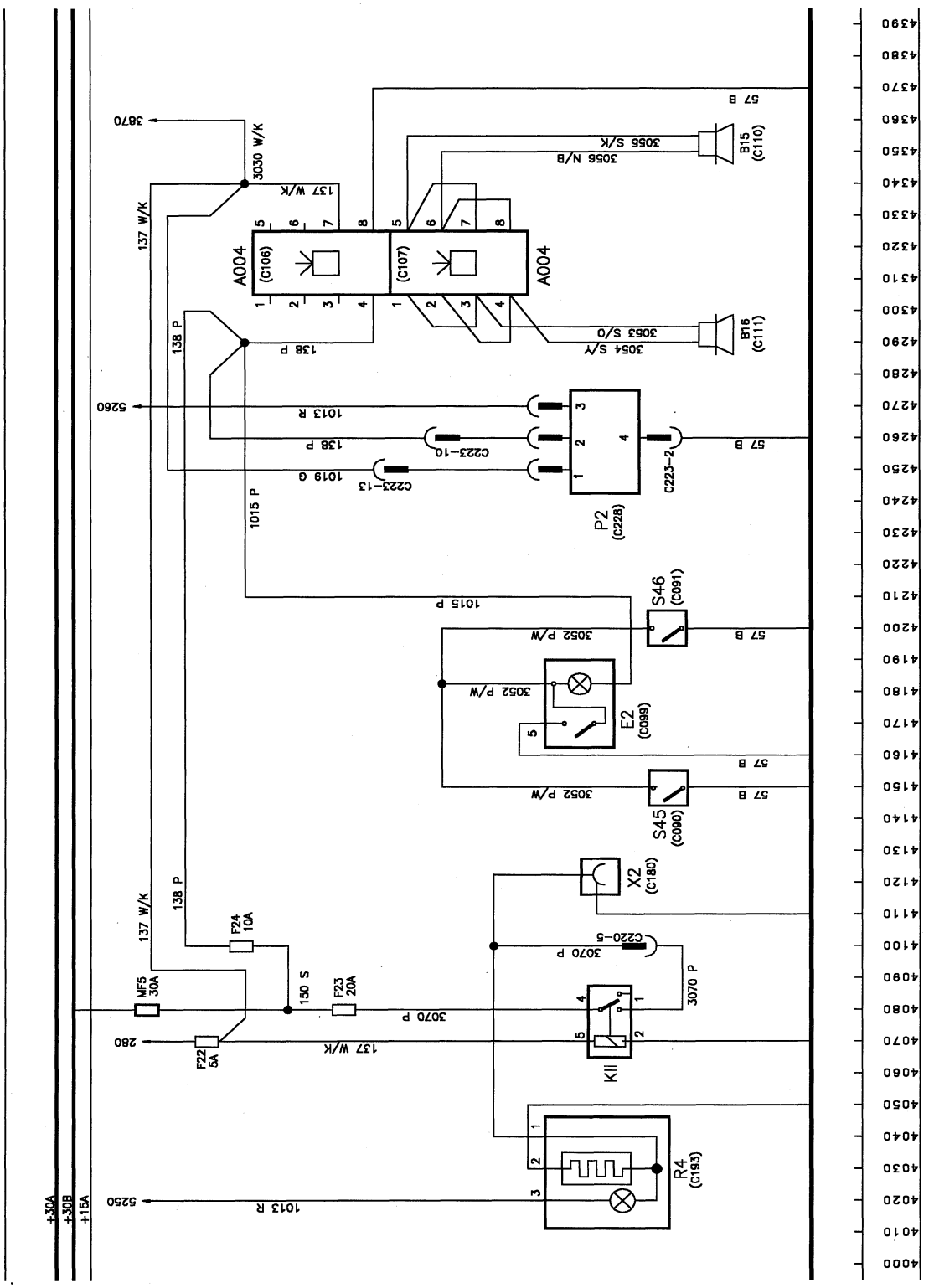
A004
(C106)
(C107)
A004
B15
(C110)
B16
(C111)
P2
(C228)
C223-2
C223-10
C223-13
S46
(C091)
E2
(C099)
S45
(C090)
X2
(C180)
C220-5
KII
R4
(C193)
MF5
30A
F22
5A
F23
20A
F24
10A
+30A
+30B
+15A
3870
3030 W/K
137 W/K
138 P
5260
1013 R
1019 G
1015 P
3052 P/W
3055 S/K
3056 N/B
3053 S/O
3054 S/Y
57 B
3070 P
150 S
280
5250
4390
4380
4370
4360
4350
4340
4330
4320
4310
4300
4290
4280
4270
4260
4250
4240
4230
4220
4210
4200
4190
4180
4170
4160
4150
4140
4130
4120
4110
4100
4090
4080
4070
4060
4050
4040
4030
4020
4010
4000

CAB ACCESSORIES
Line 4000-4390

A004 Radio

B15 Speaker
B16 Speaker

E2 Interior light

F22 5A, radio and accessory socket fuse
F23 20A, Accessories, radio
F24 10A, interior lamp

KII Accessory socket relay

MF5 Maxi fuse 5 30A

P2 Clock

R4 Cigar lighter

S45 Interior light door switch
S46 Interior light door switch

X2 Accessory socket

WIRE COLOUR CODES							
B	Black	R	Red	LG	Light Green	K	Pink
N	Brown	O	Orange	U	Blue	W	White
LN	Light Brown	Y	Yellow	TQ	Turquoise		
S	Slate	G	Green	P	Purple		

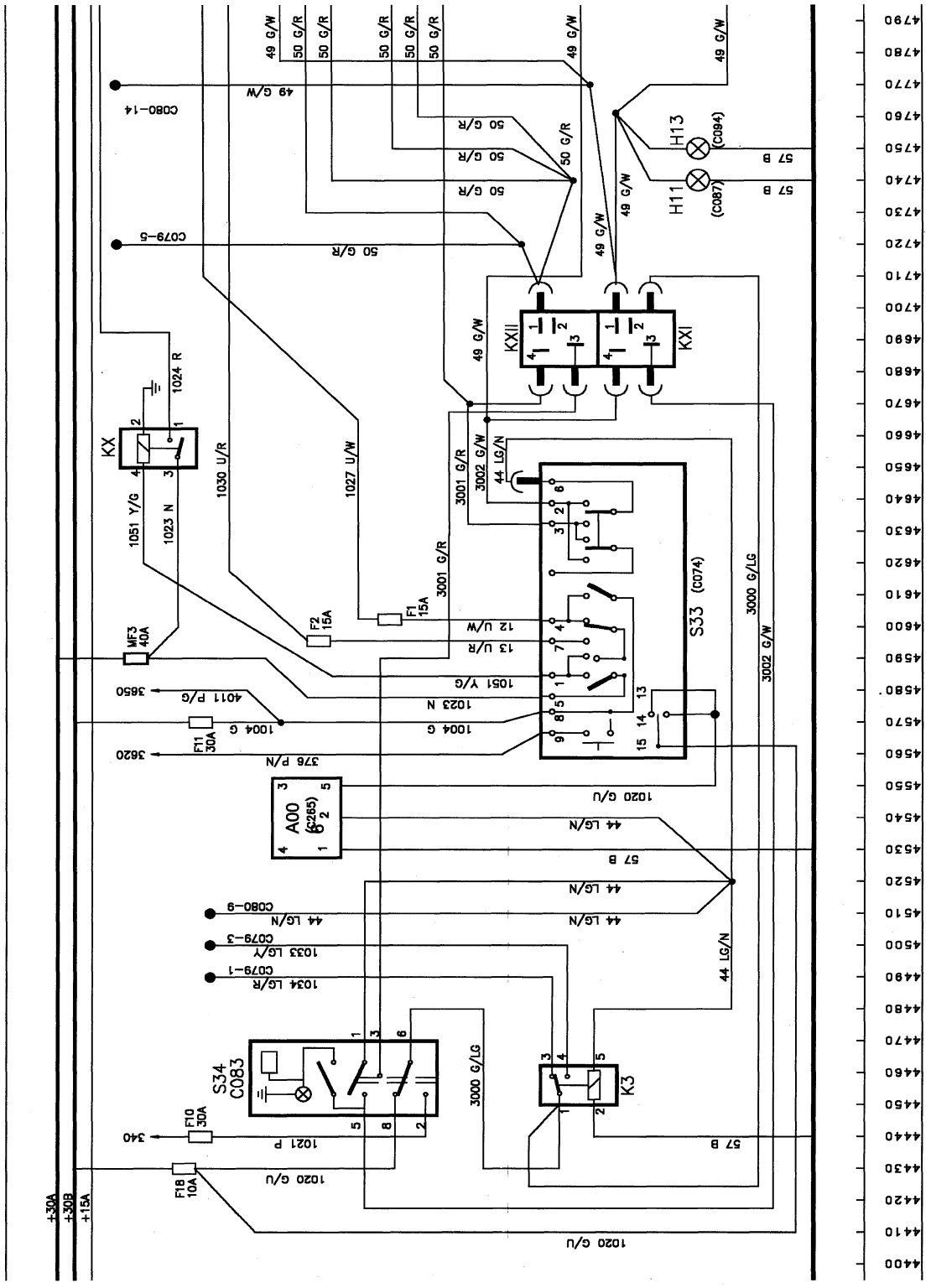
KXII
KXI
KX
H13
(C094)
H11
(C087)
S33 (C074)
S34
C083
A00
(C285)
K3
MF3
40A
F1
15A
F2
15A
F10
30A
F11
30A
F18
10A
+30A
+30B
+15A
49 G/W
50 G/R
57 B
1024 R
1030 U/R
1027 U/W
1051 Y/G
1023 N
3001 G/R
3002 G/W
44 LG/N
3000 G/LG
12 U/W
13 U/R
1004 G
4011 P/G
3850
376 P/N
3820
1020 G/U
1021 P
340
1033 LG/Y
1034 LG/R
C080-14
C080-9
C079-5
C079-3
C079-1

INDICATOR AND HAZARD LIGHTS
Line 4400-4790

A006 External Buzzer Unit

F1 15A Headlamp dip fuse
F2 15A Headlamp main fuse
F10 15A Hazards fuse
F11 30A Horn, flashers, cigar lighter, beacon fuse
F18 10A Indicators fuse

H11 Right hand front indicator lamp - NASO
H13 Right hand rear indicator lamp - NASO

K3 Flasher unit relay
KX Multi-function switch unload relay
KXI + Flasher mode relay
KXII

MF3 Maxi fuse 3, 40A

S33 Indicator switch
S34 Hazard light switch

WIRE COLOUR CODES							
B	Black	R	Red	LG	Light Green	K	Pink
N	Brown	O	Orange	U	Blue	W	White
LN	Light Brown	Y	Yellow	TQ	Turquoise		
S	Slate	G	Green	P	Purple		

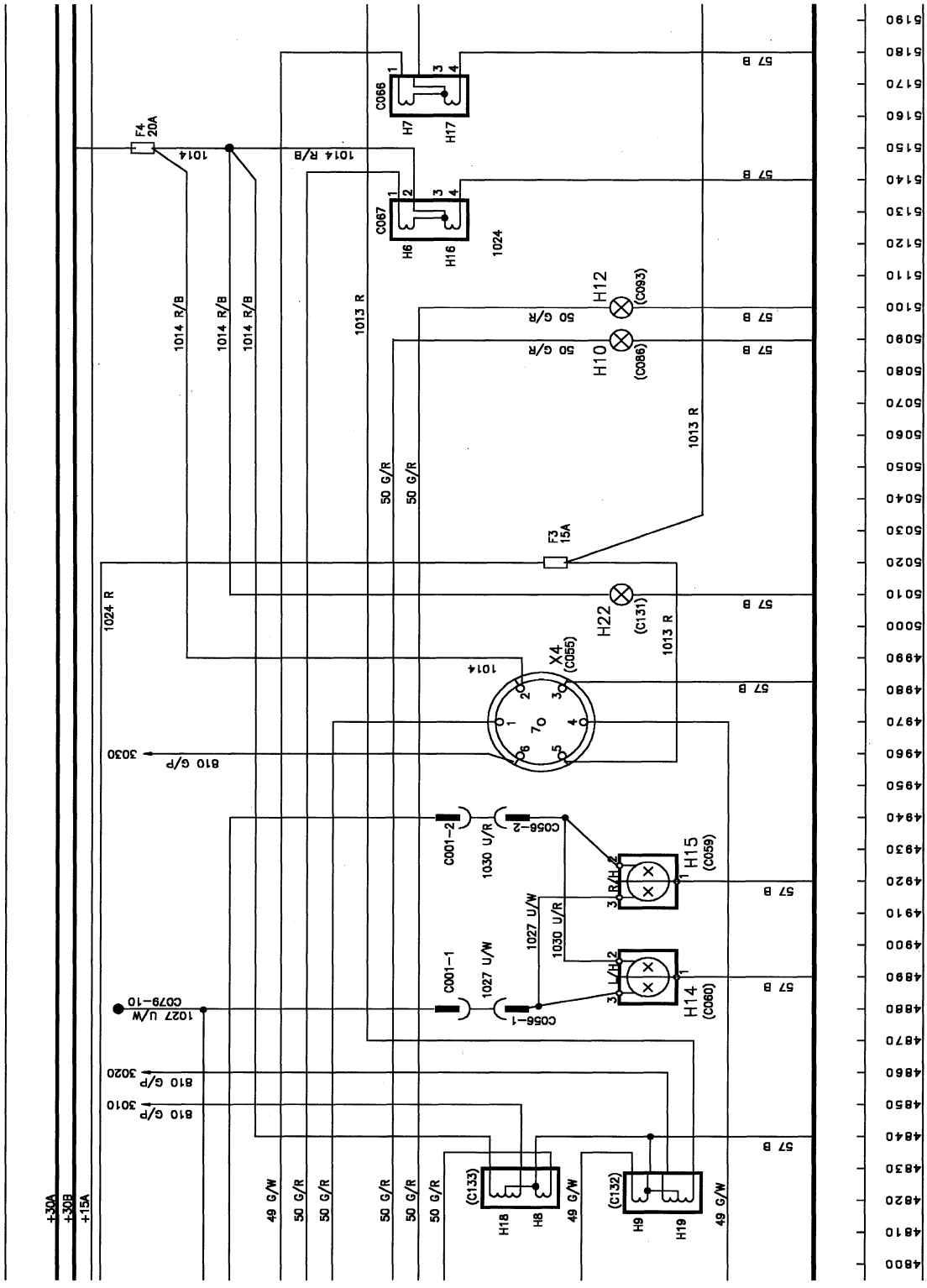
F4
20A
1014
1014 R/B
C066
H7
H17
C067
H6
H16
1024
1014 R/B
1014 R/B
1014 R/B
1013 R
H12
(C093)
50 G/R
H10
(C086)
50 G/R
57 B
57 B
57 B
1013 R
50 G/R
50 G/R
F3
15A
1024 R
H22
(C131)
1013 R
57 B
X4
(C055)
1014
57 B
810 G/P
3030
C001-2
1030 U/R
C056-2
H15
(C059)
1027 U/W
1030 U/R
57 B
C001-1
1027 U/W
C056-1
H14
(C060)
57 B
1027 U/W
C079-10
810 G/P
3020
810 G/P
3010
57 B
+30A
+30B
+15A
49 G/W
50 G/R
50 G/R
50 G/R
50 G/R
50 G/R
(C133)
H18
H8
49 G/W
(C132)
H9
H19
49 G/W
5190
5180
5170
5160
5150
5140
5130
5120
5110
5100
5090
5080
5070
5060
5050
5040
5030
5020
5010
5000
4990
4980
4970
4960
4950
4940
4930
4920
4910
4900
4890
4880
4870
4860
4850
4840
4830
4820
4810
4800

MAIN LIGHTS
Line 4800-5190

F3	15A Right hand side lamp fuse
F4	15A Left hand side lamp fuse
H6	Left hand front indicator lamp, ISO
H7	Right hand front indicator lamp, ISO
H8	Left hand rear indicator lamp, ISO
H9	Right hand rear indicator lamp, ISO
H10	Left hand front indicator lamp, NASO
H12	Left hand rear indicator lamp, NASO
H14	Left hand headlamp
H15	Right hand headlamp
H16	Left hand front side lamp
H17	Right hand front side lamp
H18	Left hand rear brake lamp
H19	Right hand rear brake lamp
H22	Licence plate lamp, lower
X4	Trailer socket

WIRE COLOUR CODES							
B	Black	R	Red	LG	Light Green	K	Pink
N	Brown	O	Orange	U	Blue	W	White
LN	Light Brown	Y	Yellow	TQ	Turquoise		
S	Slate	G	Green	P	Purple		

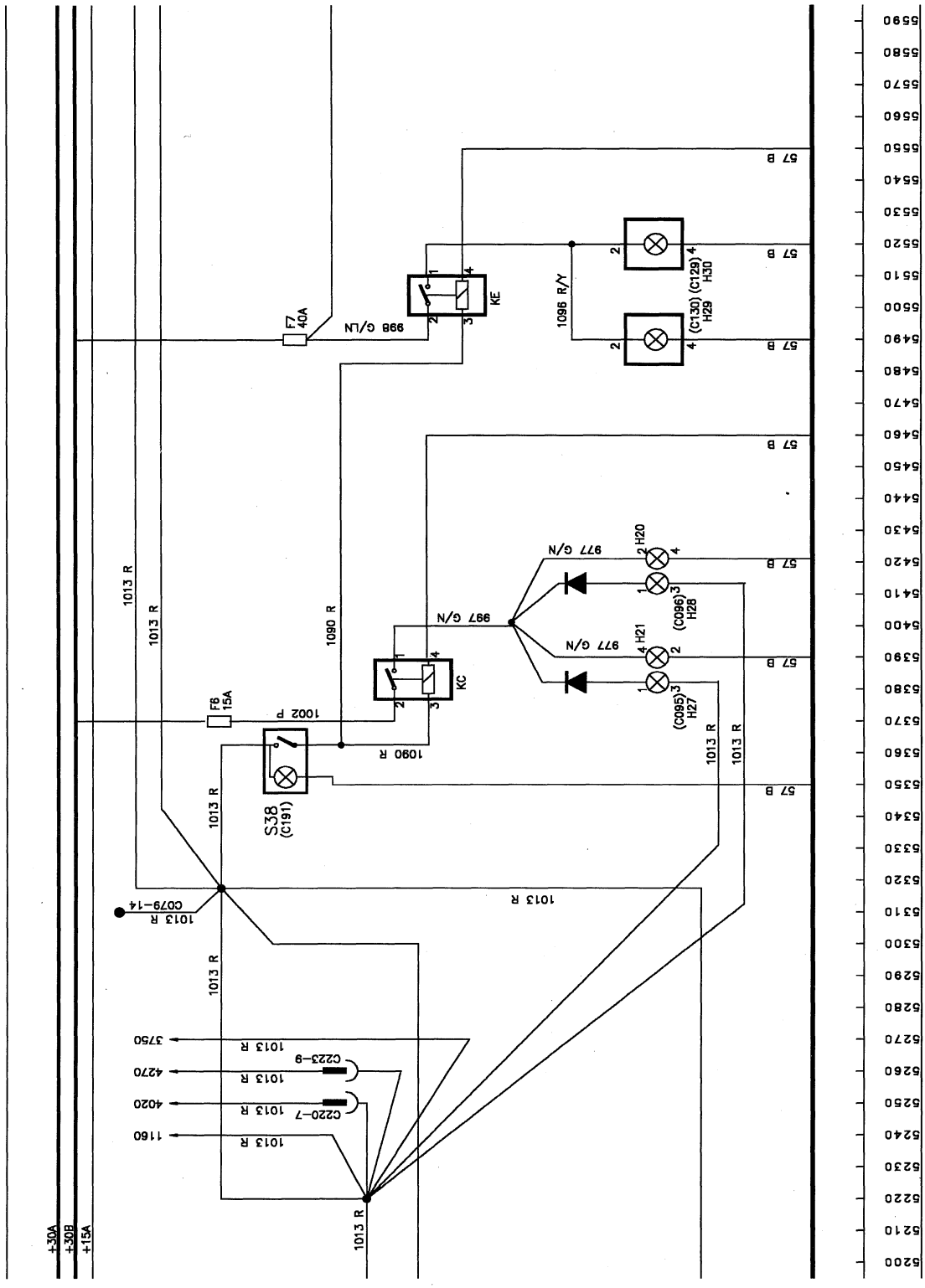
+30A
+30B
+15A
F7 40A
998 G/LN
KE
1096 R/Y
(C130) (C129) H30 H29
F6 15A
1002 P
KC
1090 R
997 G/N
977 G/N
H20
H21
(C096) H28
(C095) H27
S38 (C191)
1013 R
57 B
C079-14
C223-9
C220-7
3750
4270
4020
1160
5590
5580
5570
5560
5550
5540
5530
5520
5510
5500
5490
5480
5470
5460
5450
5440
5430
5420
5410
5400
5390
5380
5370
5360
5350
5340
5330
5320
5310
5300
5290
5280
5270
5260
5250
5240
5230
5220
5210
5200

WORKLAMPS
Line 5200-5590

F6 15A Rear fender worklamps fuse
F7 20A Front and rear roof worklamps fuse

H27 Left hand upper rear worklamp
H28 Right hand upper rear worklamp
H29 Left hand lower rear wworklamp
H30 Right hand lower rear worklamp

KC Rear worklamp relay
KE Lower rear worklamp relay

S38 Rear worklamp switch

WIRE COLOUR CODES							
B	Black	R	Red	LG	Light Green	K	Pink
N	Brown	O	Orange	U	Blue	W	White
LN	Light Brown	Y	Yellow	TQ	Turquoise		
S	Slate	G	Green	P	Purple		

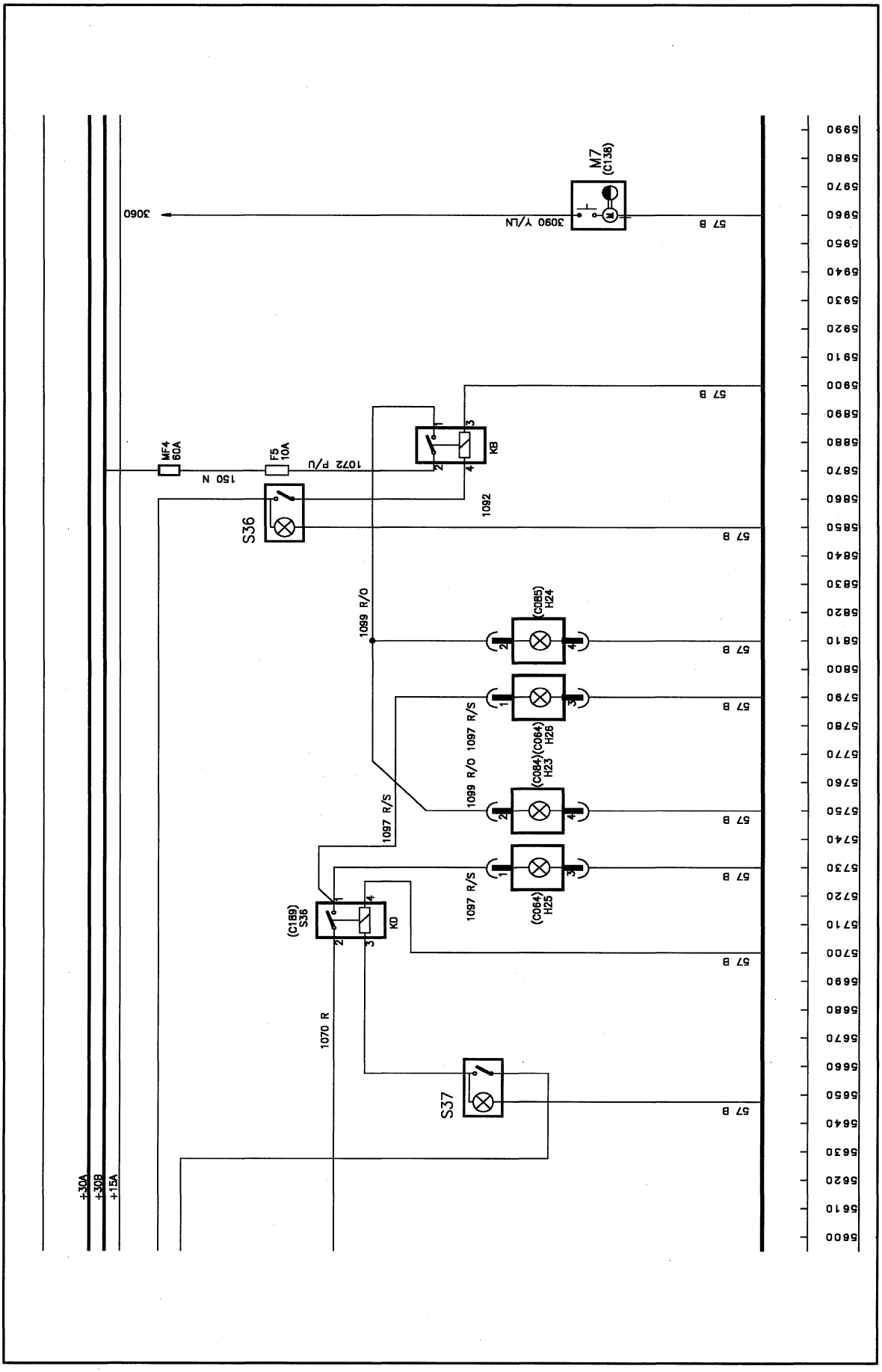
M7
(C138)
3060
3090 Y/LN
57 B
MF4
60A
F5
10A
150 N
1072 P/U
KB
S36
1092
1099 R/O
(C085)
H24
1097 R/S
(C084)(C084)
H23 H26
(C084)
H25
(C189)
S36
KD
1070 R
S37
+30A
+30B
+15A

WORKLAMPS
Line 5600-5990

F5 10A Low front worklamp

H23 Left hand upper front worklamp
H24 Right hand upper front worklamp
H25 Left hand lower front worklamp
H26 Right hand lower front worklamp

KB Front worklamp relay

KD Front lower worklamp relay

M7 Air seat pump

MF4 Maxi fuse 4, 60A

S36 Front upper worklamp switch
S37 Front lower worklamp switch

WIRE COLOUR CODES							
B	Black	R	Red	LG	Light Green	K	Pink
N	Brown	O	Orange	U	Blue	W	White
LN	Light Brown	Y	Yellow	TQ	Turquoise		
S	Slate	G	Green	P	Purple		

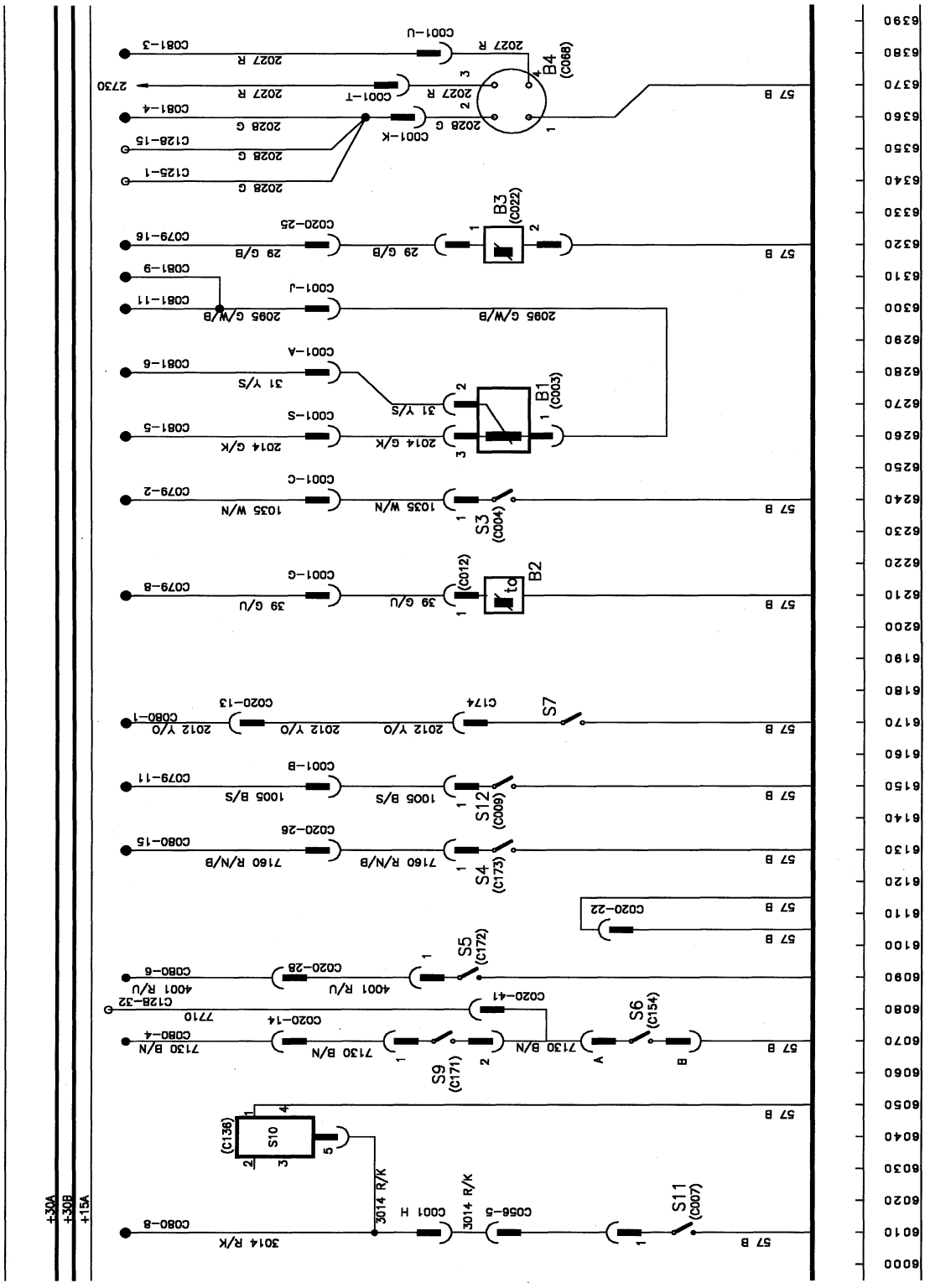
+30A
+30B
+15A
B4 (C068)
B3 (C022)
B1 (C003)
S3 (C004)
B2
S7
S12 (C009)
S4 (C173)
S5 (C172)
S6 (C154)
S9 (C171)
S10 (C136)
S11 (C007)
C001-U
C001-T
C001-K
C001-J
C001-A
C001-S
C001-C
C001-G
C001-B
C001-H
C020-25
C020-13
C020-26
C020-22
C020-28
C020-41
C020-14
C056-5
C080-1
C080-4
C080-6
C080-8
C080-15
C079-2
C079-8
C079-11
C079-16
C081-3
C081-4
C081-5
C081-6
C081-9
C081-11
C125-1
C128-15
C128-32
C174
2027 R
2028 G
2730
2095 G/W/B
31 Y/S
2014 G/K
1035 W/N
39 G/U
2012 Y/O
1005 B/S
7160 R/N/B
4001 R/U
7710
7130 B/N
3014 R/K
57 B
6000
6010
6020
6030
6040
6050
6060
6070
6080
6090
6100
6110
6120
6130
6140
6150
6160
6170
6180
6190
6200
6210
6220
6230
6240
6250
6260
6270
6280
6290
6300
6310
6320
6330
6340
6350
6360
6370
6380
6390

SENSORS
Line 6000-6390

B1 Engine oil pressure sender
B2 Engine coolant temperature sender
B3 Fuel tank sender
B4 Radar

S3 Engine oil pressure switch
S4 Low charge pressure switch (CCLS)
S5 Hydraulic oil temperature switch
S6 Hydraulic filter blocked switch
S7 Steering pressure switch
S9 Transmission oil temperature switch
S10 Handbrake switch
S11 Brake fluid level switch
S12 Air filter vacuum switch

WIRE COLOUR CODES							
B	Black	R	Red	LG	Light Green	K	Pink
N	Brown	O	Orange	U	Blue	W	White
LN	Light Brown	Y	Yellow	TQ	Turquoise		
S	Slate	G	Green	P	Purple		

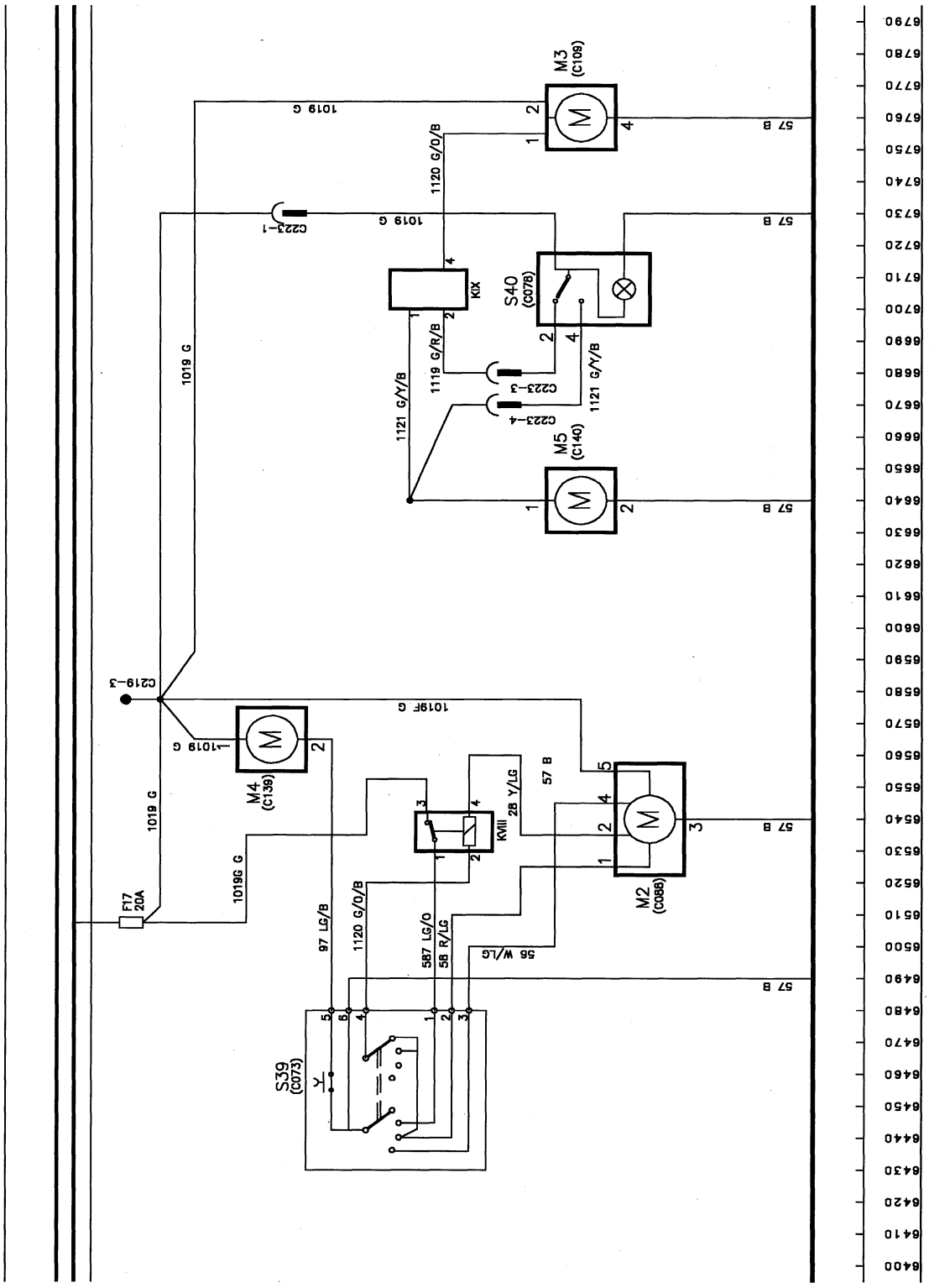
M3
(C108)
M5
(C140)
M4
(C139)
M2
(C088)
S40
(C078)
S39
(C073)
K9X
KVIII
F17
20A
C219-3
C223-1
C223-3
C223-4
1019 G
1120 G/O/B
1119 G/R/B
1121 G/Y/B
1019F G
1019G G
97 LG/B
587 LG/O
58 R/LG
56 W/LG
28 Y/LG
57 B

WASHERS AND WIPERS
Line 6400-6790

F17 20A, Washers and wipers fuse

KVIII Intermittent front wiper relay
KIX Intermittent rear wiper relay

M2 Front wiper motor
M3 Rear wiper motor

M4 Washer motor - front
M5 Washer motor - rear

S39 Front washer/wiper switch
S40 Rear washer/wiper switch

WIRE COLOUR CODES							
B	Black	R	Red	LG	Light Green	K	Pink
N	Brown	O	Orange	U	Blue	W	White
LN	Light Brown	Y	Yellow	TQ	Turquoise		
S	Slate	G	Green	P	Purple		

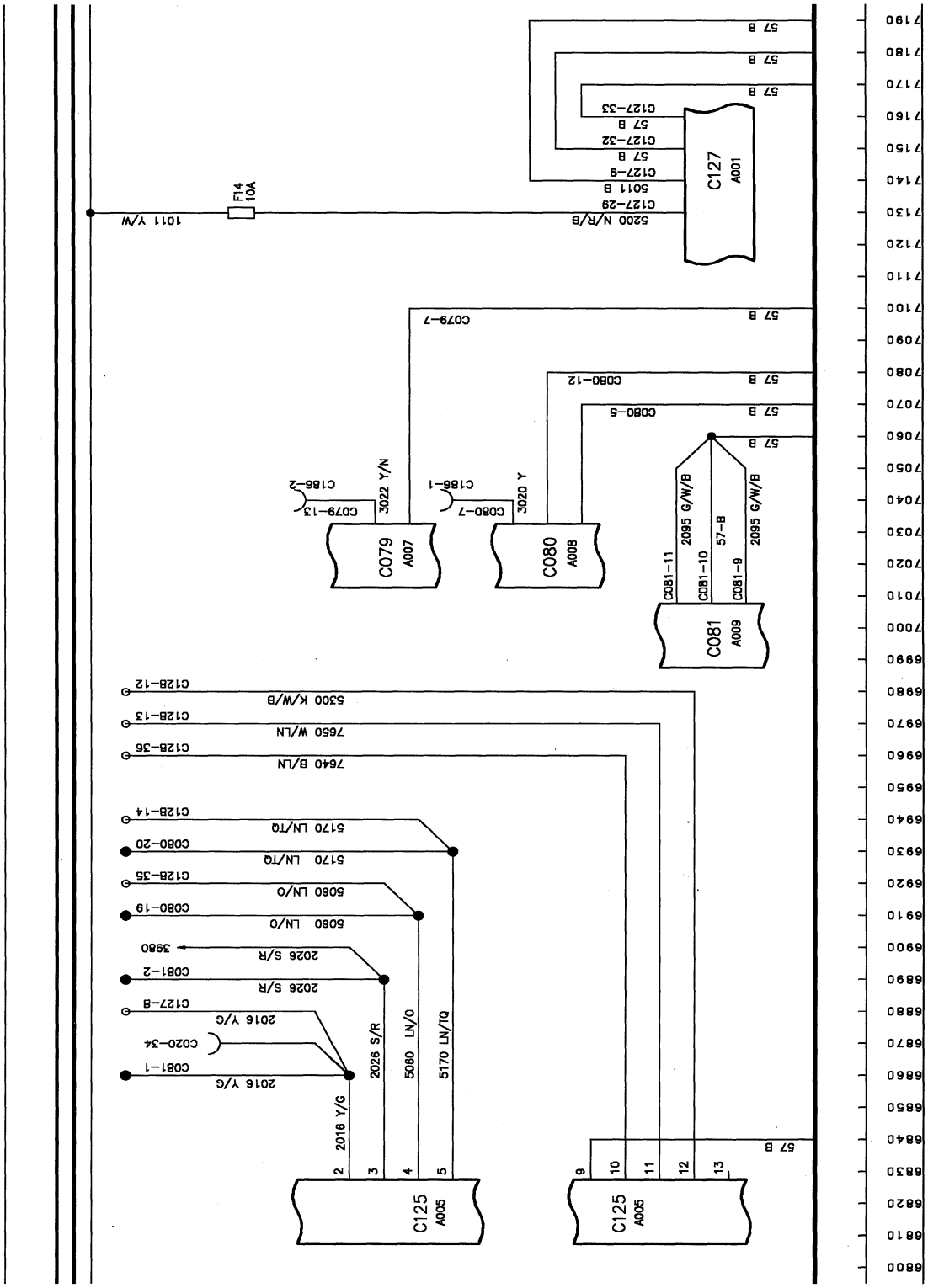
C127
A001
C079
A007
C080
A008
C081
A009
C125
A005
C125
A005
F14
10A
1011 Y/W
5200 N/R/B
57 B
C127-33
C127-32
C127-9
C127-29
5011 B
C079-7
C080-12
C080-5
3022 Y/N
3020 Y
C079-13
C080-7
C188-2
C188-1
2095 G/W/B
57-B
2095 G/W/B
C081-11
C081-10
C081-9
C128-12
5300 K/W/B
C128-13
7650 W/LN
C128-36
7640 B/LN
C128-14
5170 LN/TQ
C080-20
5170 LN/TQ
C128-35
5060 LN/O
C080-19
5060 LN/O
3980
2026 S/R
C081-2
2026 S/R
C127-8
2016 Y/G
C020-34
C081-1
2016 Y/G
2016 Y/G
2026 S/R
5060 LN/O
5170 LN/TQ
2
3
4
5
9
10
11
12
13
7190
7180
7170
7160
7150
7140
7130
7120
7110
7100
7090
7080
7070
7060
7050
7040
7030
7020
7010
7000
6990
6980
6970
6960
6950
6940
6930
6920
6910
6900
6890
6880
6870
6860
6850
6840
6830
6820
6810
6800

PROCESSOR FEEDS AND GROUNDS
Line 6800-7190

A001 Transmission / EDC Processor
A005 Diagnostic plug
A007 Instrument cluster
A008 Instrument cluster
A009 Instrument cluster

F14 10A, EDC processor feed

WIRE COLOUR CODES							
B	Black	R	Red	LG	Light Green	K	Pink
N	Brown	O	Orange	U	Blue	W	White
LN	Light Brown	Y	Yellow	TQ	Turquoise		
S	Slate	G	Green	P	Purple		

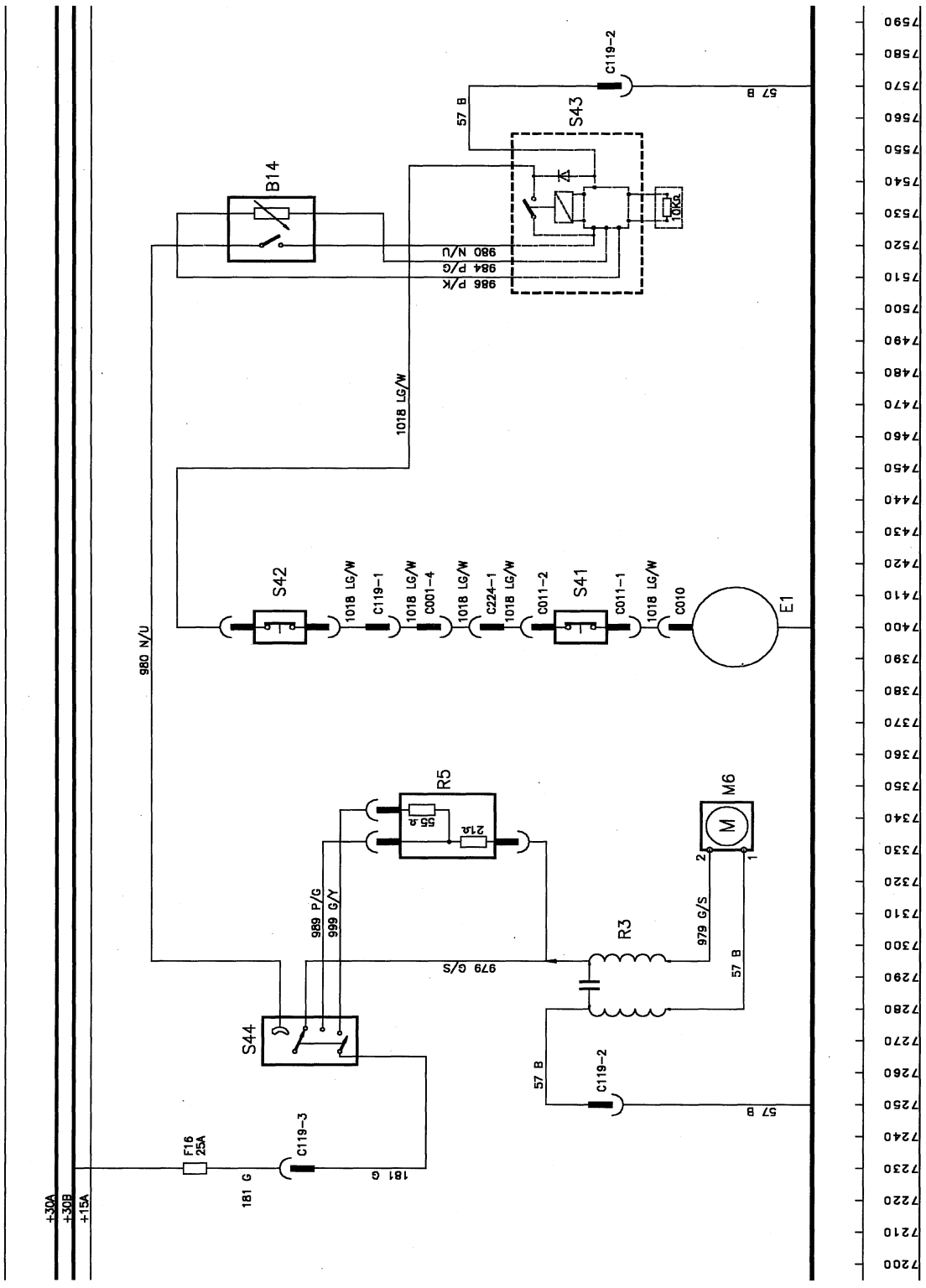
+30A
+30B
+15A
F16
25A
C119-3
181 G
181 G
S44
989 P/G
999 G/Y
979 G/S
R5
55
21
R3
M6
979 G/S
57 B
C119-2
57 B
57 B
S43
10KΩ
B14
980 N/U
984 P/G
986 P/K
1018 LG/W
980 N/U
S42
1018 LG/W
C119-1
1018 LG/W
C001-4
1018 LG/W
C224-1
1018 LG/W
C011-2
S41
C011-1
1018 LG/W
C010
E1
7590
7580
7570
7560
7550
7540
7530
7520
7510
7500
7490
7480
7470
7460
7450
7440
7430
7420
7410
7400
7390
7380
7370
7360
7350
7340
7330
7320
7310
7300
7290
7280
7270
7260
7250
7240
7230
7220
7210
7200

AIR CONDITIONING AND CAB HEATING
Line 7200-7590

B14 Temperature control potentiometer

E1 Air conditioning compressor clutch

F16 25A, Air Con and heater blower fuse

M6 Heater blower motor

R3 Blower speed resistor

R5 Speed resistor

S41 Air con, high/low pressure switch

S42 Low pressure cut out switch

S43 Temperature control switch

S44 Blower speed switch

WIRE COLOUR CODES							
B	Black	R	Red	LG	Light Green	K	Pink
N	Brown	O	Orange	U	Blue	W	White
LN	Light Brown	Y	Yellow	TQ	Turquoise		
S	Slate	G	Green	P	Purple		

NOTES PAGE

WIRING DIAGRAMS:

TS SERIES: Synchro Command Transmission, (12x12) W/Cab,

Wiring Diagrams Circuit	Description	Line Reference Range
Circuit 1	Starting, Charging, Thermostart, Fuel Injection Pump	0-390
Circuit 2	Transmission Circuits	400-1590
Circuit 3	Electronic Draft Control	1600-2790
Circuit 4	Four Wheel Drive and Differential Lock	2800-3190
Circuit 5	Power Take Off	3200-3590
Circuit 6	Cab Accessories	3600-4390
Circuit 7	Main Lamps, Indicators & Hazards	4400-5190
Circuit 8	Work Lamps	5200-5990
Circuit 9	Sensors / Senders	6000-6390
Circuit 10	Wipers & Washers	6400-6790
Circuit 11	Processor Feed and Ground connections	6800-7190
Circuit 12	Air-Conditioning & Heating	7200-7590

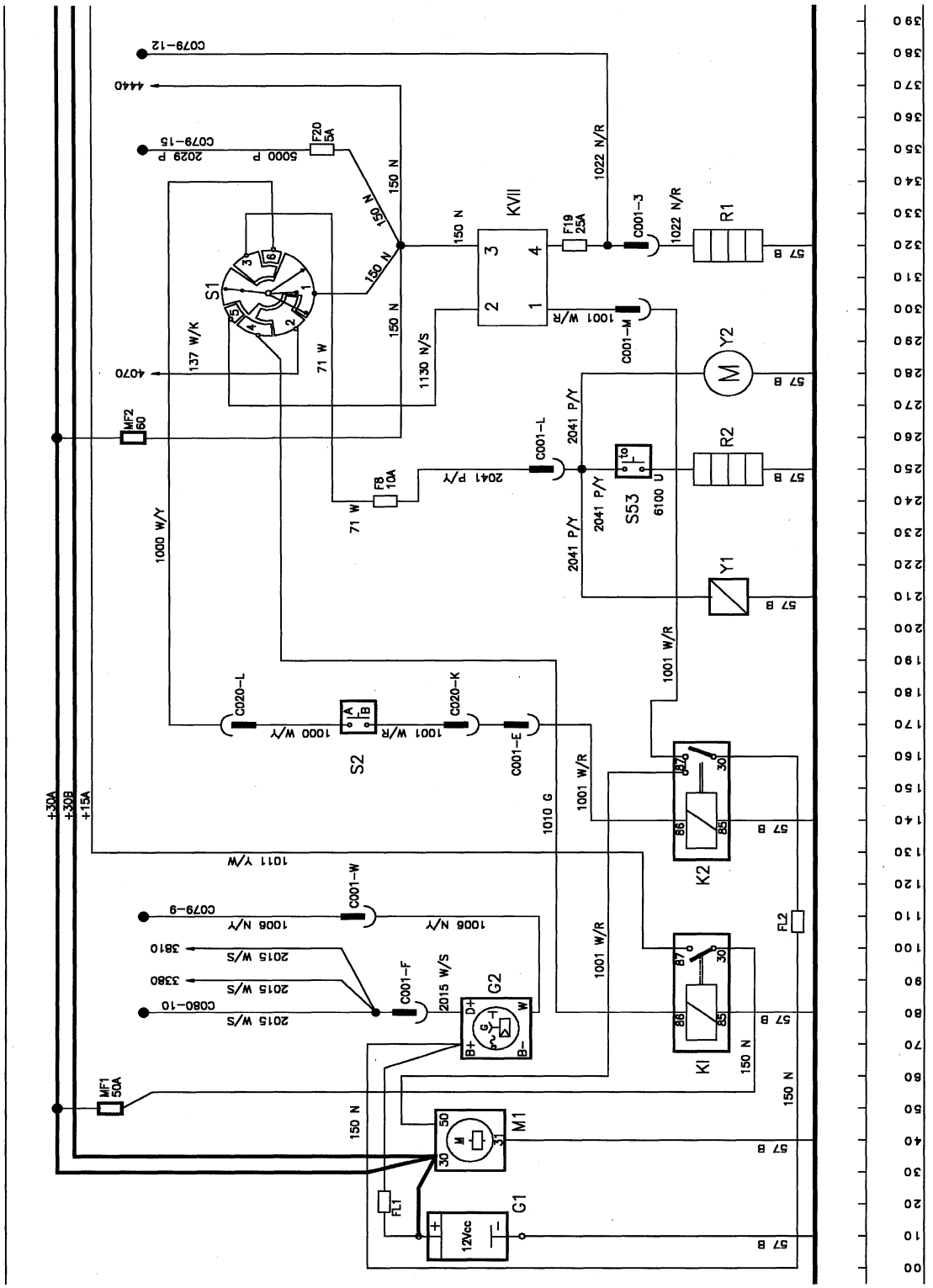
C079-12
4440
C079-15
2029 P
5000 P
F20 5A
150 N
1022 N/R
KVII
F19 25A
C001-3
R1
S1
137 W/K
71 W
1130 N/S
1001 W/R
C001-M
Y2
4070
MF2 60
C001-L
2041 P/Y
R2
F8 10A
S53
6100 U
1000 W/Y
Y1
C020-L
C020-K
S2
C001-E
1001 W/R
1010 G
K2
+30A
+30B
+15A
1011 Y/W
C001-W
C079-9
1008 N/Y
3810
2015 W/S
3380
C080-10
C001-F
2015 W/S
G2
FL2
K1
MF1 50A
M1
FL1
G1
12Vcc

STARTING, CHARGING, THERMOSTART, FUEL INJECTION PUMP
line 0-390

STARTING

FL1 Fuse Link
FL2 Fuse Link
G1 Battery
K1 Ignition Relay
K2 Start Relay
M1 Starter Motor and Solenoid
S1 Ignition Switch
S2 Start inhibitor switch

CHARGING

G2 Alternator

THERMOSTART AND FUEL SYSTEM

F8 10A, Shut off Solenoid Fuse
F19 25A Thermostart Fuse
KVII Thermostart relay
R1 Thermostart coil
R2 Fuel Injection Pump Wax Motor
S53 Thermostatic Switch
Y1 Shut Off Solenoid
Y2 Electric Lift Pump

MF1 Maxi Fuse 1 50A
MF2 Maxi Fuse 2 60A
F20 5A, Processor 'Keep alive memory' Fuse

WIRE COLOUR CODES							
B	Black	R	Red	LG	Light Green	K	Pink
N	Brown	O	Orange	U	Blue	W	White
LN	Light Brown	Y	Yellow	TQ	Turquoise		
S	Slate	G	Green	P	Purple		

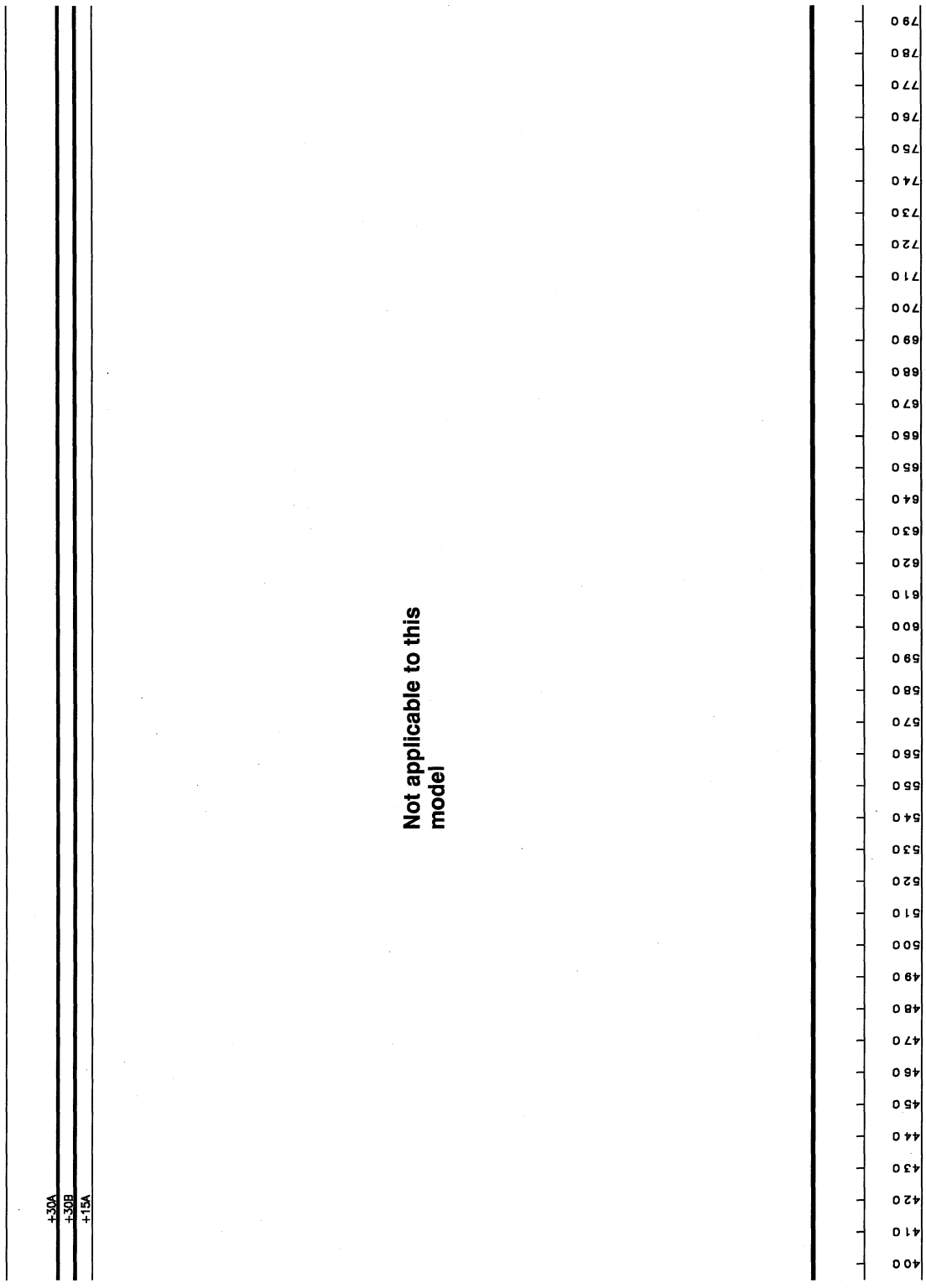
+30A
+30B
+15A
Not applicable to this model
400
410
420
430
440
450
460
470
480
490
500
510
520
530
540
550
560
570
580
590
600
610
620
630
640
650
660
670
680
690
700
710
720
730
740
750
760
770
780
790

TRANSMISSION SYSTEM
Line 400-790

WIRE COLOUR CODES							
B	Black	R	Red	LG	Light Green	K	Pink
N	Brown	O	Orange	U	Blue	W	White
LN	Light Brown	Y	Yellow	TQ	Turquoise		
S	Slate	G	Green	P	Purple		

+30A
+30B
+15A

800
810
820
830
840
850
860
870
880
890
900
910
920
930
940
950
960
970
980
990
1000
1010
1020
1030
1040
1050
1060
1070
1080
1090
1100
1110
1120
1130
1140
1150
1160
1170
1180
1190

Not applicable to this model

TRANSMISSION SYSTEM
Line 800-1190

WIRE COLOUR CODES							
B	Black	R	Red	LG	Light Green	K	Pink
N	Brown	O	Orange	U	Blue	W	White
LN	Light Brown	Y	Yellow	TQ	Turquoise		
S	Slate	G	Green	P	Purple		

+30A
+30B
+15A

1200
1210
1220
1230
1240
1250
1260
1270
1280
1290
1300
1310
1320
1330
1340
1350
1360
1370
1380
1390
1400
1410
1420
1430
1440
1450
1460
1470
1480
1490
1500
1510
1520
1530
1540
1550
1560
1570
1580
1590

Not applicable to this model

TRANSMISSION SYSTEM
Line 1200-1590

WIRE COLOUR CODES							
B	Black	R	Red	LG	Light Green	K	Pink
N	Brown	O	Orange	U	Blue	W	White
LN	Light Brown	Y	Yellow	TQ	Turquoise		
S	Slate	G	Green	P	Purple		

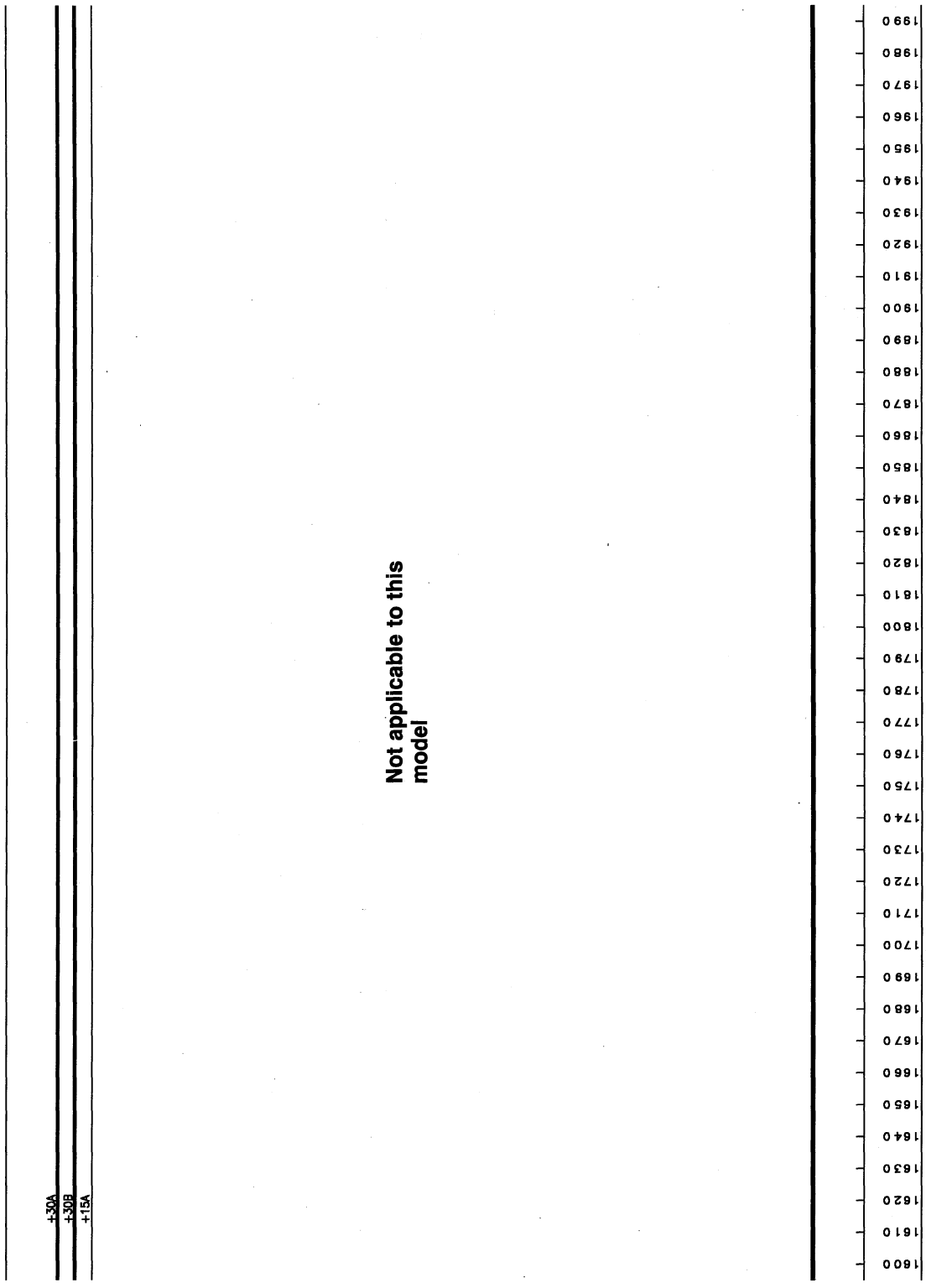
+30A
+30B
+15A
Not applicable to this model
1600
1610
1620
1630
1640
1650
1660
1670
1680
1690
1700
1710
1720
1730
1740
1750
1760
1770
1780
1790
1800
1810
1820
1830
1840
1850
1860
1870
1880
1890
1900
1910
1920
1930
1940
1950
1960
1970
1980
1990

ELECTRONIC DRAFT CONTROL
Line 1600-1990

WIRE COLOUR CODES							
B	Black	R	Red	LG	Light Green	K	Pink
N	Brown	O	Orange	U	Blue	W	White
LN	Light Brown	Y	Yellow	TQ	Turquoise		
S	Slate	G	Green	P	Purple		

+30A
+30B
+15A

2000
2010
2020
2030
2040
2050
2060
2070
2080
2090
2100
2110
2120
2130
2140
2150
2160
2170
2180
2190
2200
2210
2220
2230
2240
2250
2260
2270
2280
2290
2300
2310
2320
2330
2340
2350
2360
2370
2380
2390

Not applicable to this model

ELECTRONIC DRAFT CONTROL
Line 2000-2390

WIRE COLOUR CODES							
B	Black	R	Red	LG	Light Green	K	Pink
N	Brown	O	Orange	U	Blue	W	White
LN	Light Brown	Y	Yellow	TQ	Turquoise		
S	Slate	G	Green	P	Purple		

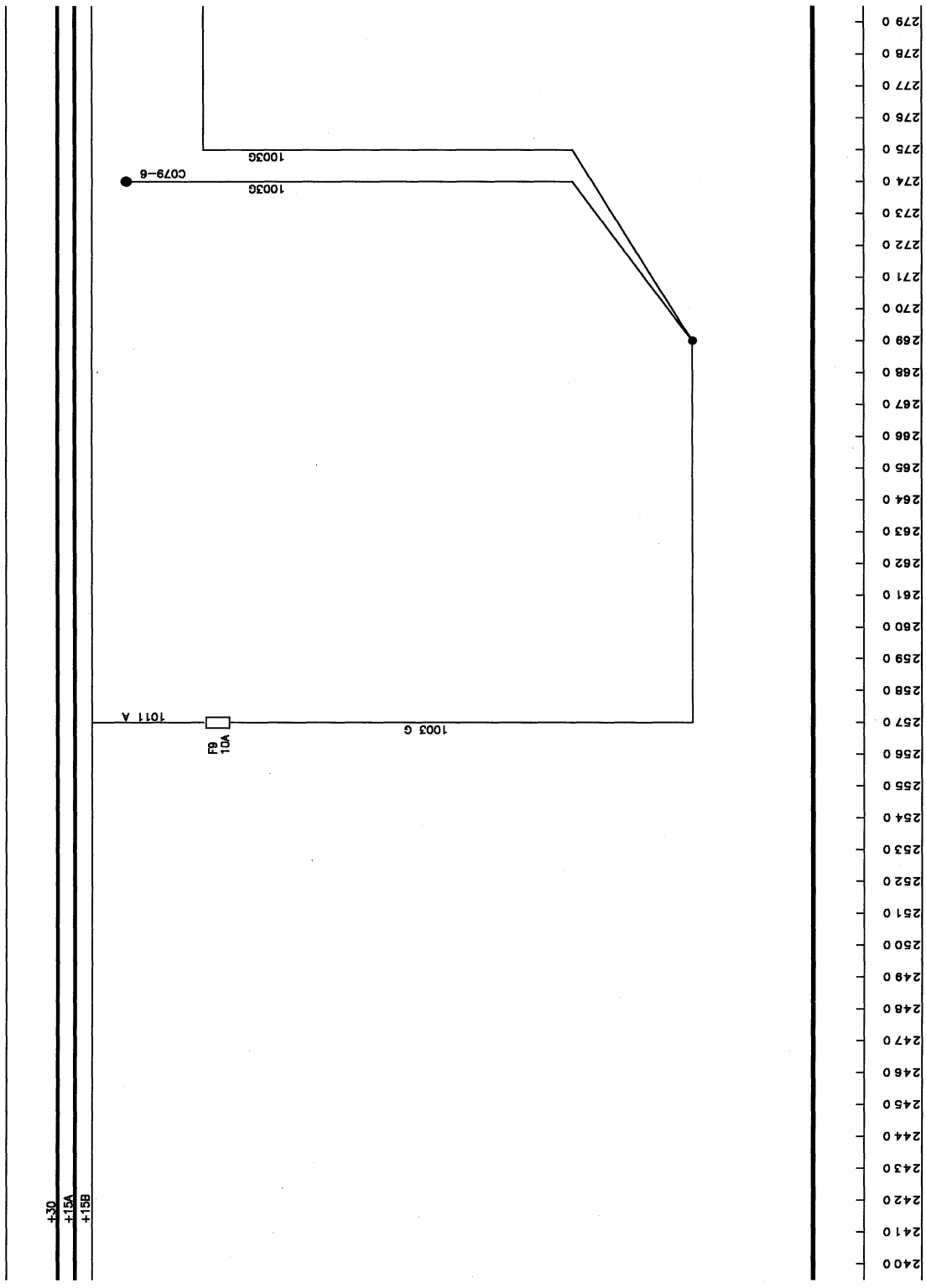
+30
+15A
+15B
1011 A
F9
10A
1003 G
1003G
C079-6
1003G
279 0
278 0
277 0
276 0
275 0
274 0
273 0
272 0
271 0
270 0
269 0
268 0
267 0
266 0
265 0
264 0
263 0
262 0
261 0
260 0
259 0
258 0
257 0
256 0
255 0
254 0
253 0
252 0
251 0
250 0
249 0
248 0
247 0
246 0
245 0
244 0
243 0
242 0
241 0
240 0

ELECTRONIC DRAFT CONTROL
Line 2400-2790

F9 10A, Gauges and external switches fuse

WIRE COLOUR CODES							
B	Black	R	Red	LG	Light Green	K	Pink
N	Brown	O	Orange	U	Blue	W	White
LN	Light Brown	Y	Yellow	TQ	Turquoise		
S	Slate	G	Green	P	Purple		

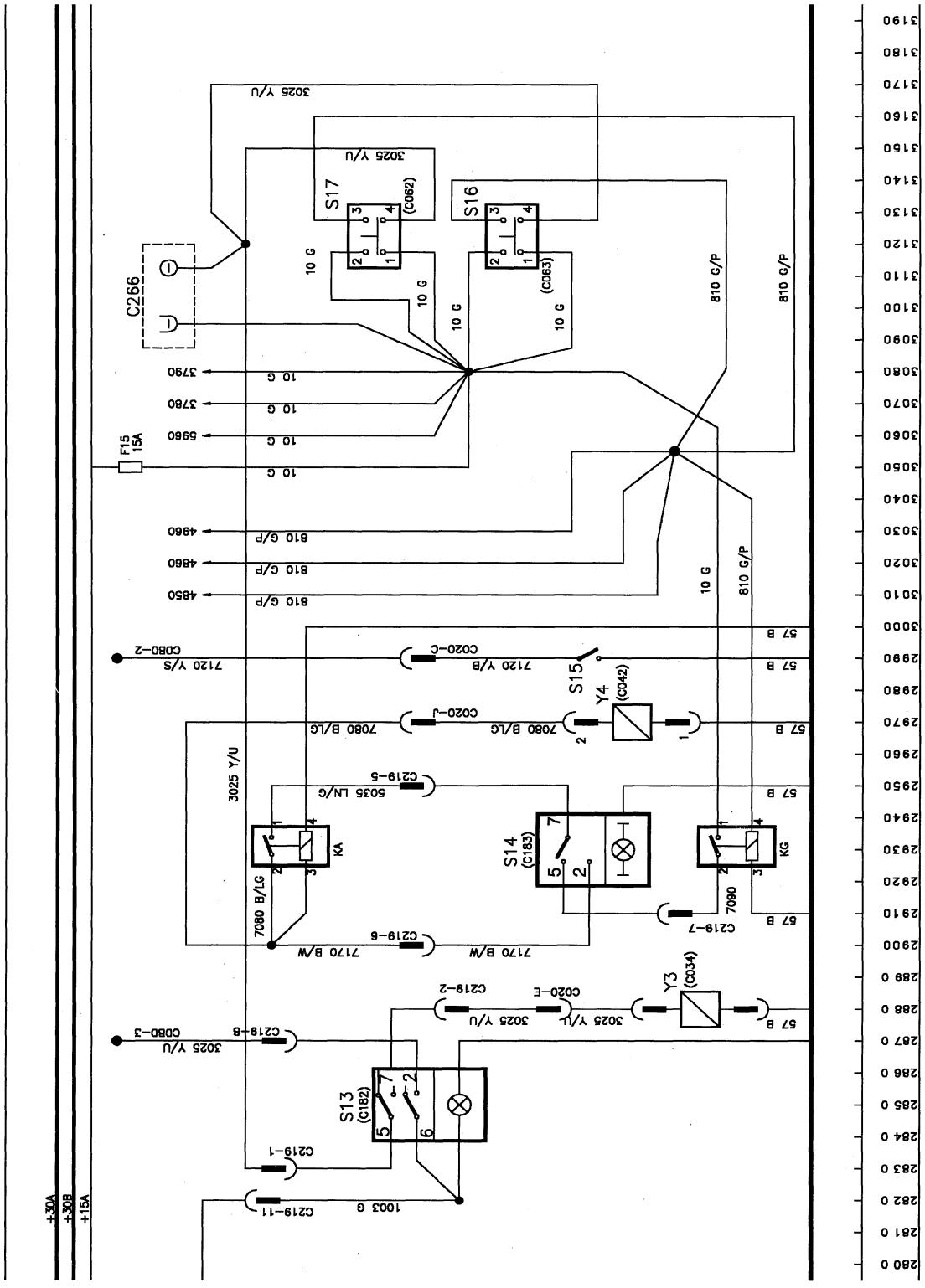
C266
S17
(C062)
S16
(C063)
F15
15A
S15
Y4
(C042)
S14
(C183)
KA
KG
S13
(C182)
Y3
(C034)
3025 Y/U
10 G
810 G/P
7120 Y/S
7120 Y/B
7080 B/LG
5035 LN/G
7170 B/W
7090
1003 G
57 B
+30A
+30B
+15A

FOUR WHEEL DRIVE AND DIFFERENTIAL LOCK
Line 2800-3190

F15 15A, Stop lamps fuse

KA Differential lock relay (normally open)
KG Differential lock relay (normally closed)

S13 FWD, cab switch
S14 Differential, cab switch
S15 Differential Lock Engaged Switch
S16 Brake Switch - Right Hand
S17 Brake Switch - Left Hand

Y3 Four Wheel Drive Solenoid
Y4 Differential Lock Solenoid

C266 Four wheel drive braking disable connector (Join to disable FWD braking)

WIRE COLOUR CODES							
B	Black	R	Red	LG	Light Green	K	Pink
N	Brown	O	Orange	U	Blue	W	White
LN	Light Brown	Y	Yellow	TQ	Turquoise		
S	Slate	G	Green	P	Purple		

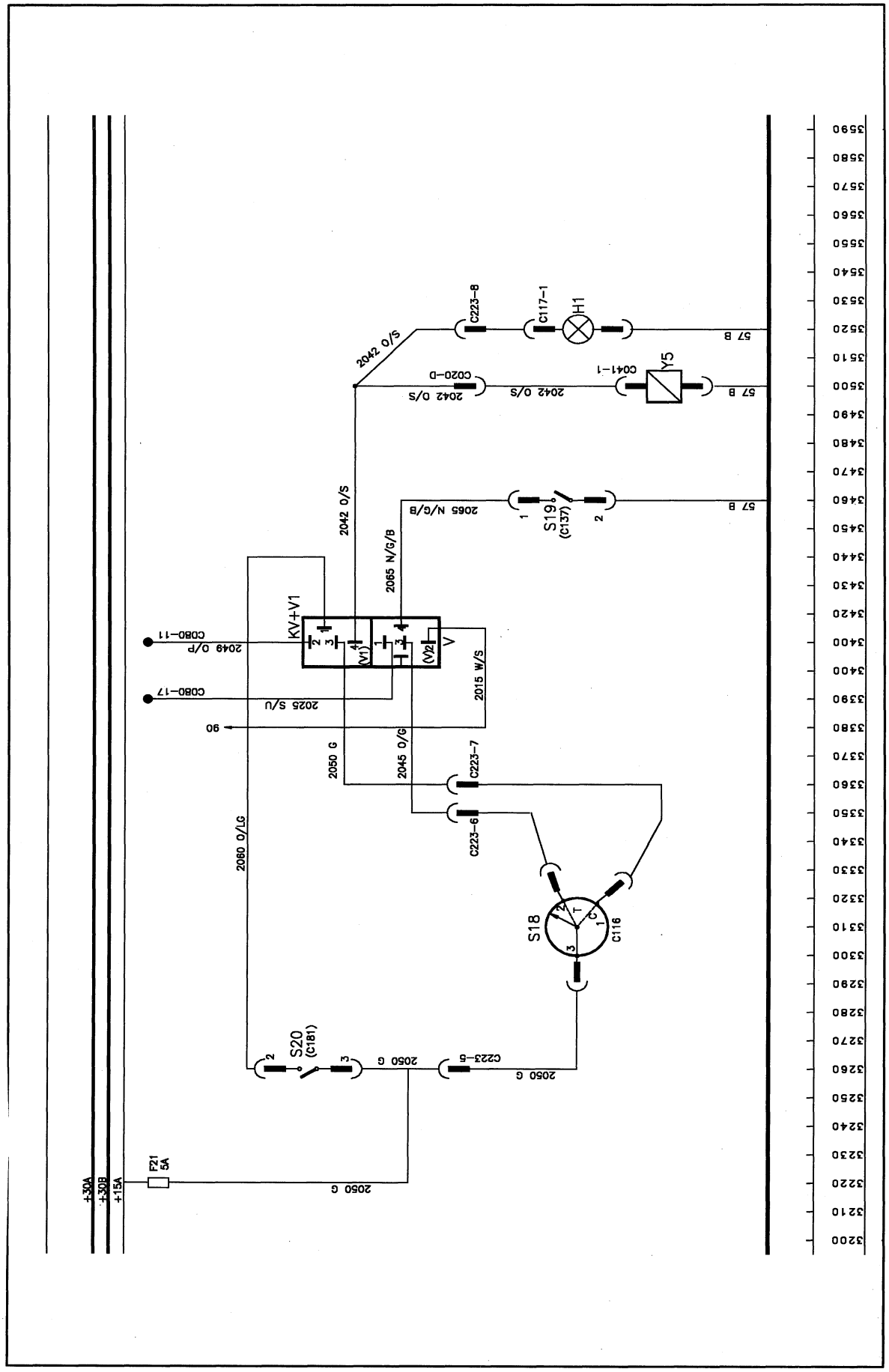

+30A
+30B
+15A
F21
5A
2050 G
S20
(C181)
C223-5
2050 G
2050 G
2060 O/LG
S18
C116
C223-6
C223-7
2050 G
2045 O/G
2015 W/S
90
2025 S/U
C080-17
2049 O/P
C080-11
KV+V1
(V1)
(V2)
V
2065 N/G/B
2042 O/S
2065 N/G/B
S19
(C137)
57 B
2042 O/S
C020-D
2042 O/S
C041-1
Y5
57 B
2042 O/S
C223-8
C117-1
H1
57 B
3200
3210
3220
3230
3240
3250
3260
3270
3280
3290
3300
3310
3320
3330
3340
3350
3360
3370
3380
3390
3400
3400
3420
3430
3440
3450
3460
3470
3480
3490
3500
3510
3520
3530
3540
3550
3560
3570
3580
3590

POWER TAKE OFF
Line 3200-3590

F21	5A, PTO fuse	**S18**	PTO switch
		S19	Seat switch
H1	PTO engaged lamp	**S20**	540/1000 PTO speed switch
KV+V1	PTO Relay	**Y5**	PTO Solenoid

WIRE COLOUR CODES							
B	Black	R	Red	LG	Light Green	K	Pink
N	Brown	O	Orange	U	Blue	W	White
LN	Light Brown	Y	Yellow	TQ	Turquoise		
S	Slate	G	Green	P	Purple		

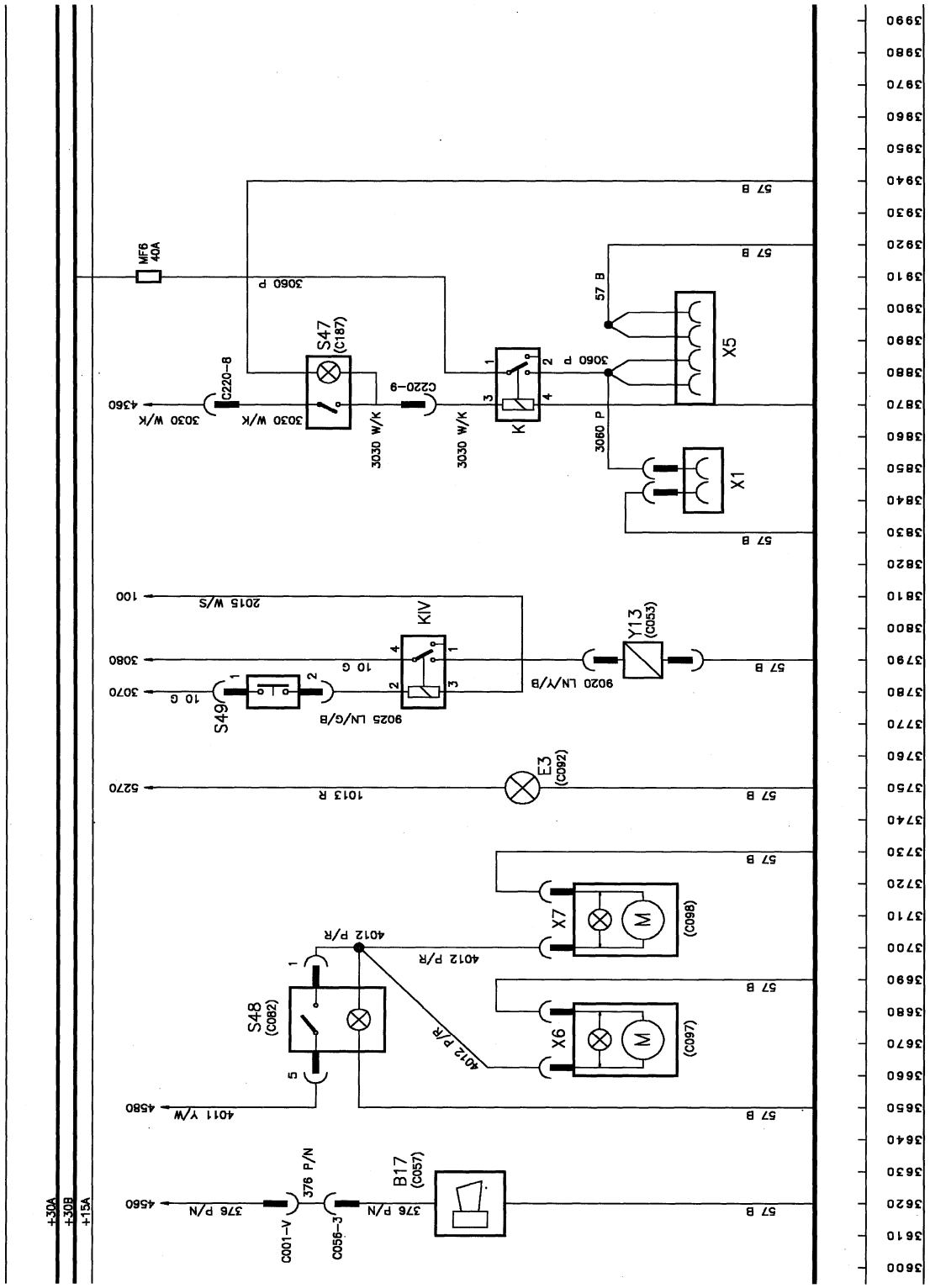
MF6
40A
3060 P
S47
(C187)
C220-8
C220-9
3030 W/K
4360
K
X5
X1
57 B
100
2015 W/S
KIV
3080
3070
10 G
S49
9025 LN/G/B
9020 LN/Y/B
Y13
(C053)
5270
1013 R
E3
(C092)
X7
(C098)
X6
(C097)
4012 P/R
S48
(C082)
4580
4011 Y/W
B17
(C057)
376 P/N
C001-V
C056-3
+30A
+30B
+15A
3600
3610
3620
3630
3640
3650
3660
3670
3680
3690
3700
3710
3720
3730
3740
3750
3760
3770
3780
3790
3800
3810
3820
3830
3840
3850
3860
3870
3880
3890
3900
3910
3920
3930
3940
3950
3960
3970
3980
3990

CAB ACCESSORIES
Line 3600-3990

B17 Horn

E3 Console Light

K Implement socket relay
KIV Remote valve relay

MF6 Maxi Fuse 6, 40A

S47 40Amp Accessory terminals switch

S48 Beacon switch
S49 Remote valve switch

X1 40 Amp screw terminal
X5 4 Pin 40 amp socket
X6 Roof beacon left hand
X7 Roof beacon right hand

Y13 Remote valve solenoid

WIRE COLOUR CODES							
B	Black	R	Red	LG	Light Green	K	Pink
N	Brown	O	Orange	U	Blue	W	White
LN	Light Brown	Y	Yellow	TQ	Turquoise		
S	Slate	G	Green	P	Purple		

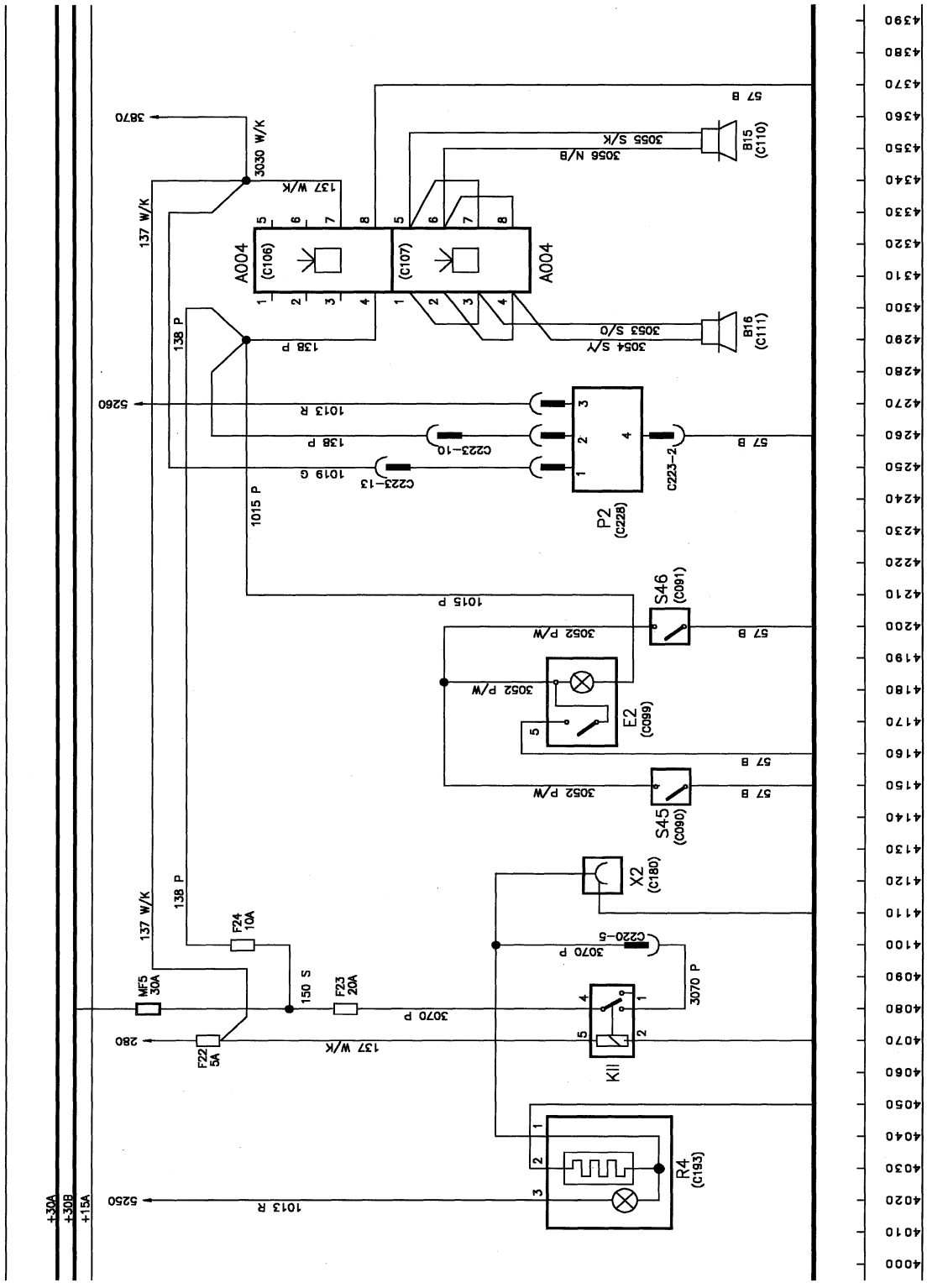
3870
3030 W/K
137 W/K
137 W/K
A004
(C106)
(C107)
A004
B15
(C110)
B16
(C111)
3055 S/K
3056 N/B
3053 S/O
3054 S/Y
57 B
138 P
138 P
5260
1013 R
138 P
1019 G
C223-10
C223-13
C223-2
P2
(C228)
1015 P
1015 P
S46
(C091)
3052 P/W
57 B
E2
(C099)
S45
(C090)
X2
(C180)
C220-5
3070 P
137 W/K
138 P
F24
10A
MF5
30A
150 S
F23
20A
3070 P
3070 P
280
F22
5A
137 W/K
KII
R4
(C193)
5250
1013 R
+30A
+30B
+15A
4390
4380
4370
4360
4350
4340
4330
4320
4310
4300
4290
4280
4270
4260
4250
4240
4230
4220
4210
4200
4190
4180
4170
4160
4150
4140
4130
4120
4110
4100
4090
4080
4070
4060
4050
4040
4030
4020
4010
4000

CAB ACCESSORIES
Line 4000-4390

A004 Radio

B15 Speaker
B16 Speaker

E2 Interior light

F22 5A, radio and accessory socket fuse
F23 20A, Accessories, radio
F24 10A, interior lamp

KII Accessory socket relay

MF5 Maxi fuse 5 30A

P2 Clock

R4 Cigar lighter

S45 Interior light door switch
S46 Interior light door switch

X2 Accessory socket

WIRE COLOUR CODES							
B	Black	R	Red	LG	Light Green	K	Pink
N	Brown	O	Orange	U	Blue	W	White
LN	Light Brown	Y	Yellow	TQ	Turquoise		
S	Slate	G	Green	P	Purple		

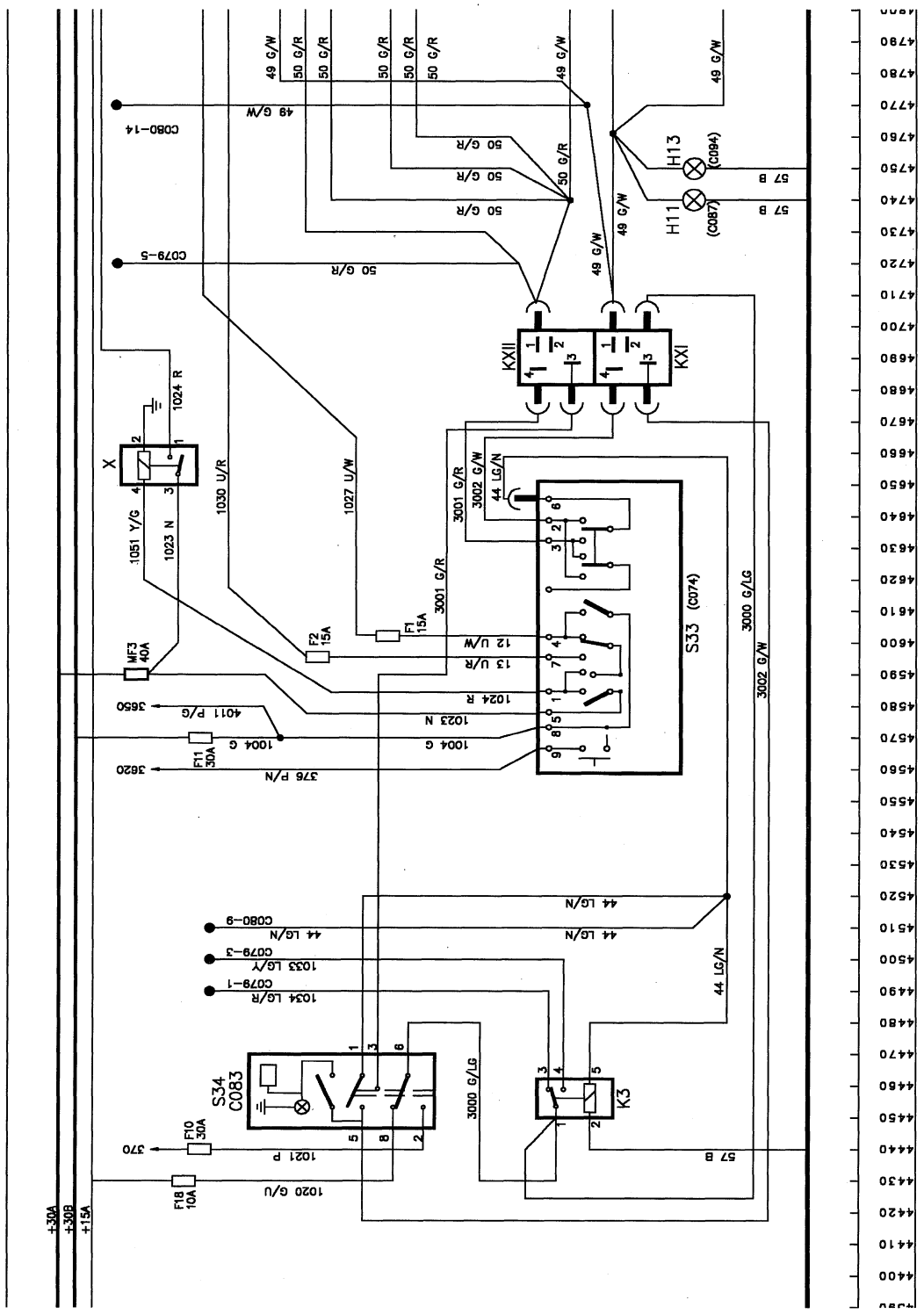
49 G/W
50 G/R
C080-14
C079-5
H13
(C094)
H11
(C087)
57 B
KXII
KXI
X
1024 R
1051 Y/G
1023 N
1030 U/R
1027 U/W
3001 G/R
3002 G/W
44 LG/N
S33 (C074)
3000 G/LG
MF3 40A
F2 15A
F1 15A
12 U/W
13 U/R
1024 R
1023 N
1004 G
4011 P/G
3650
F11 30A
376 P/N
3820
C080-9
C079-3
1033 LG/Y
C079-1
1034 LG/R
S34 C083
K3
F10 30A
370
1021 P
F18 10A
1020 G/U
+30A
+30B
+15A

INDICATOR AND HAZARD LIGHTS
Line 4400-4790

F1 15A Headlamp dip fuse
F2 15A Headlamp main fuse
F10 15A Hazards fuse
F11 30A Horn, flashers, cigar lighter, beacon fuse
F18 10A Indicators fuse

H11 Right hand front indicator lamp - NASO
H13 Right hand rear indicator lamp - NASO

K3 Flasher unit relay
KX Multi-function switch unload relay
KXI + Flasher mode relay
KXII

MF3 Maxi fuse 3, 40A

S33 Indicator switch
S34 Hazard light switch

WIRE COLOUR CODES							
B	Black	R	Red	LG	Light Green	K	Pink
N	Brown	O	Orange	U	Blue	W	White
LN	Light Brown	Y	Yellow	TQ	Turquoise		
S	Slate	G	Green	P	Purple		

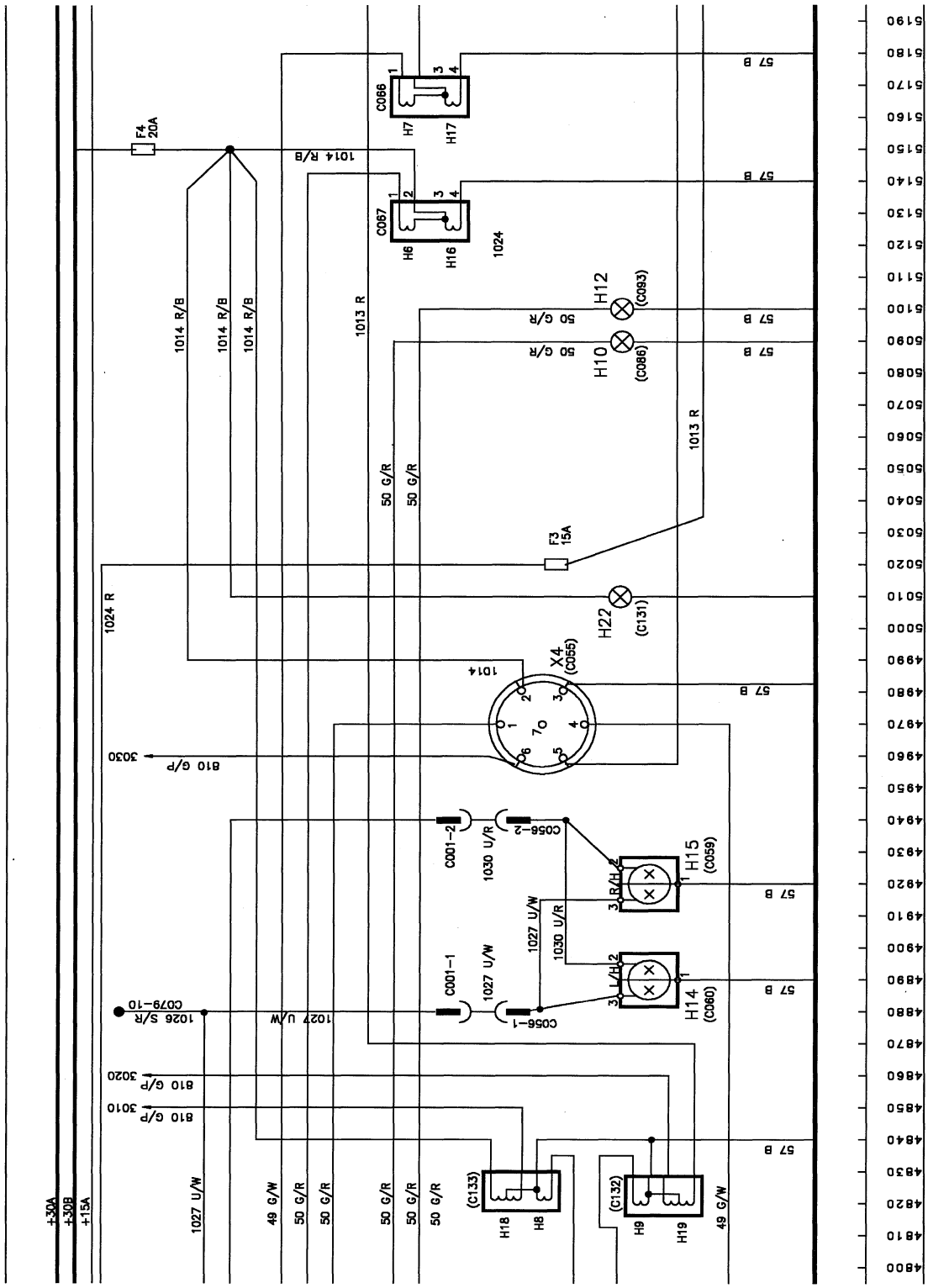
F4
20A
1014 R/B
C066
H7
H17
C067
H6
H16
1024
1014 R/B
1014 R/B
1014 R/B
1013 R
H12
(C093)
50 G/R
H10
(C086)
50 G/R
57 B
57 B
57 B
1013 R
50 G/R
50 G/R
F3
15A
1024 R
H22
(C131)
X4
(C055)
1014
57 B
3030
810 G/P
C001-2
1030 U/R
C056-2
H15
(C059)
1027 U/W
1030 U/R
C001-1
1027 U/W
C056-1
H14
(C060)
57 B
C079-10
1026 S/R
1027 U/W
3020
810 G/P
3010
810 G/P
57 B
+30A
+30B
+15A
1027 U/W
49 G/W
50 G/R
50 G/R
50 G/R
50 G/R
50 G/R
(C133)
H18
H8
(C132)
H9
H19
49 G/W
5190
5180
5170
5160
5150
5140
5130
5120
5110
5100
5090
5080
5070
5060
5050
5040
5030
5020
5010
5000
4990
4980
4970
4960
4950
4940
4930
4920
4910
4900
4890
4880
4870
4860
4850
4840
4830
4820
4810
4800

MAIN LIGHTS
Line 4800-5190

F3	15A Right hand side lamp fuse
F4	15A Left hand side lamp fuse
H6	Left hand front indicator lamp, ISO
H7	Right hand front indicator lamp, ISO
H8	Left hand rear indicator lamp, ISO
H9	Right hand rear indicator lamp, ISO
H10	Left hand front indicator lamp, NASO
H12	Left hand rear indicator lamp, NASO
H14	Left hand headlamp
H15	Right hand headlamp
H16	Left hand front side lamp
H17	Right hand front side lamp
H18	Left hand rear brake lamp
H19	Right hand rear brake lamp
H22	Licence plate lamp, lower
X4	Trailer socket

WIRE COLOUR CODES							
B	Black	R	Red	LG	Light Green	K	Pink
N	Brown	O	Orange	U	Blue	W	White
LN	Light Brown	Y	Yellow	TQ	Turquoise		
S	Slate	G	Green	P	Purple		

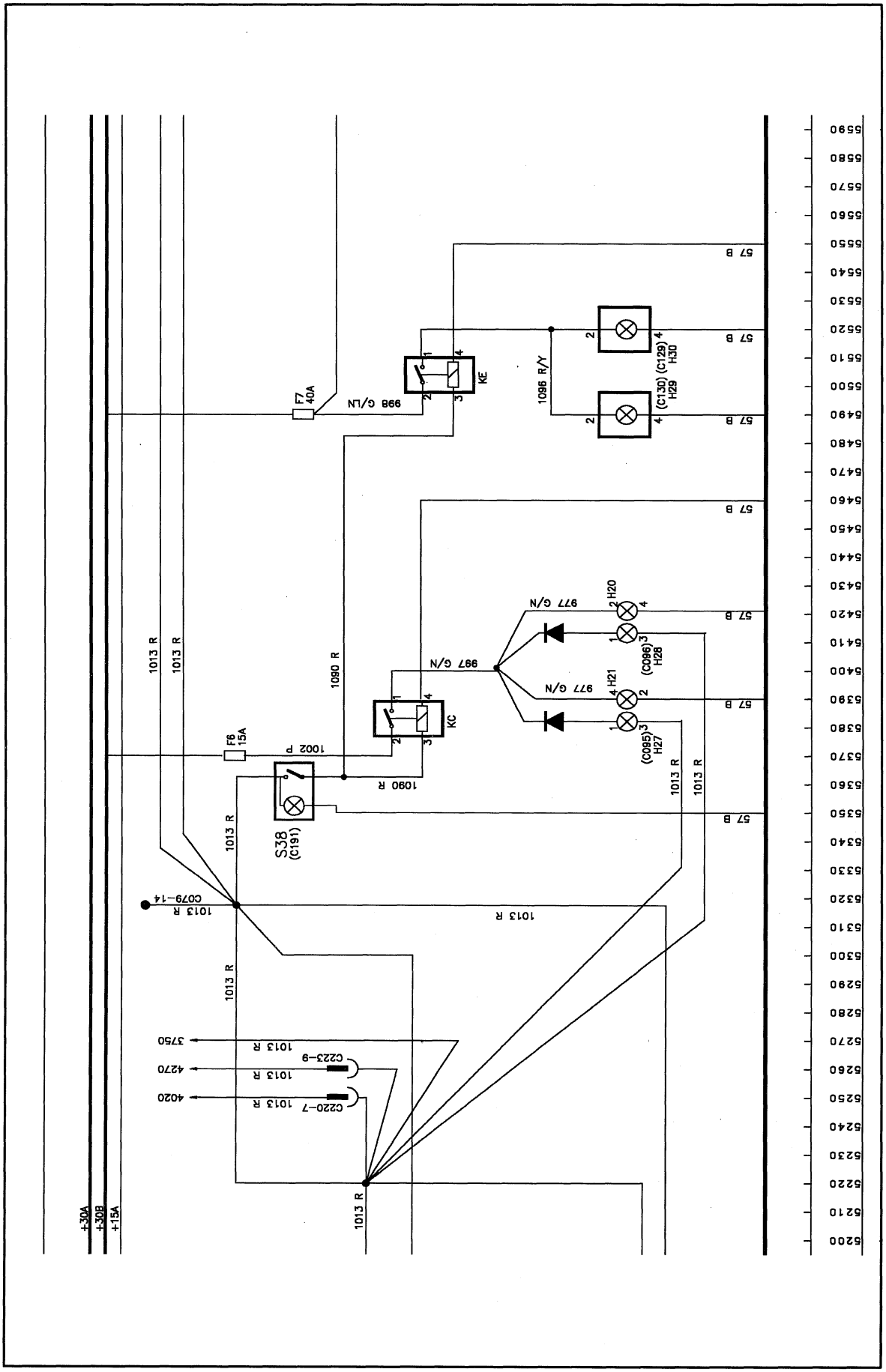
+30A
+30B
+15A
F7 40A
998 G/LN
KE
1096 R/Y
(C130) (C129) H30 H29
57 B
1013 R
1090 R
997 G/N
KC
F6 15A
1002 P
S38 (C191)
977 G/N
H20
H21
(C096) H28
(C095) H27
C079-14
1013 R
C223-9
C220-7
3750
4270
4020
5590
5580
5570
5560
5550
5540
5530
5520
5510
5500
5490
5480
5470
5460
5450
5440
5430
5420
5410
5400
5390
5380
5370
5360
5350
5340
5330
5320
5310
5300
5290
5280
5270
5260
5250
5240
5230
5220
5210
5200

WORKLAMPS
Line 5200-5590

F6 15A Rear fender worklamps fuse
F7 20A Front and rear roof worklamps fuse

H27 Left hand upper rear worklamp
H28 Right hand upper rear worklamp
H29 Left hand lower rear wworklamp
H30 Right hand lower rear worklamp

KC Rear worklamp relay
KE Lower rear worklamp relay

S38 Rear worklamp switch

WIRE COLOUR CODES							
B	Black	R	Red	LG	Light Green	K	Pink
N	Brown	O	Orange	U	Blue	W	White
LN	Light Brown	Y	Yellow	TQ	Turquoise		
S	Slate	G	Green	P	Purple		

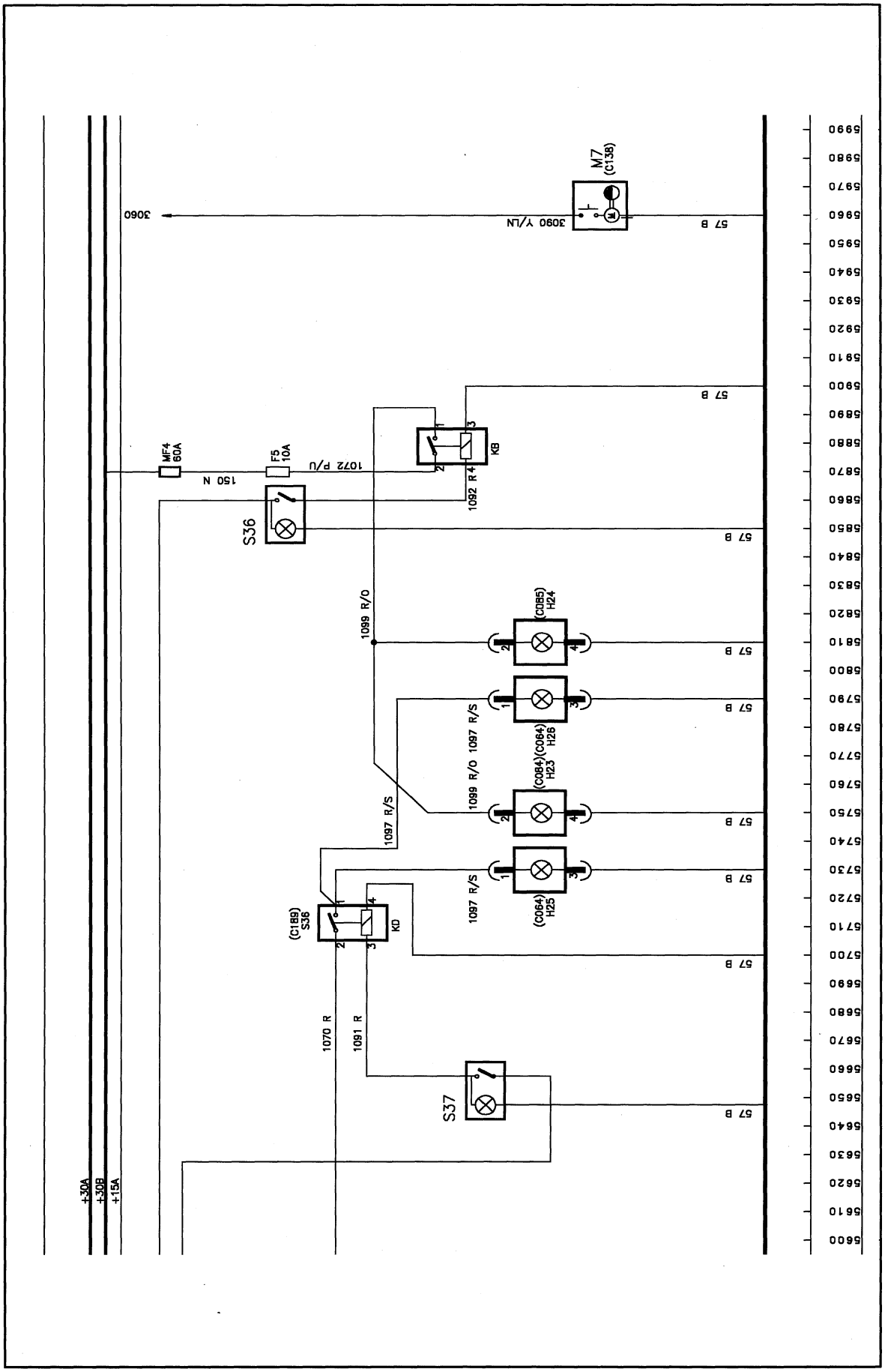
M7
(C138)
3060
3090 Y/LN
57 B
MF4
60A
F5
10A
150 N
1072 P/U
KB
1092 R
S36
1099 R/O
(C085)
H24
1097 R/S
(C084)(C064)
H23
H26
(C064)
H25
(C189)
S36
KD
1070 R
1091 R
S37
+30A
+30B
+15A

WORKLAMPS
Line 5600-5990

F5 10A Low front worklamp

H23 Left hand upper front worklamp
H24 Right hand upper front worklamp
H25 Left hand lower front worklamp
H26 Right hand lower front worklamp

KB Front worklamp relay

KD Front lower worklamp relay

M7 Air seat pump

MF4 Maxi fuse 4, 60A

S36 Front upper worklamp switch
S37 Front lower worklamp switch

WIRE COLOUR CODES							
B	Black	R	Red	LG	Light Green	K	Pink
N	Brown	O	Orange	U	Blue	W	White
LN	Light Brown	Y	Yellow	TQ	Turquoise		
S	Slate	G	Green	P	Purple		

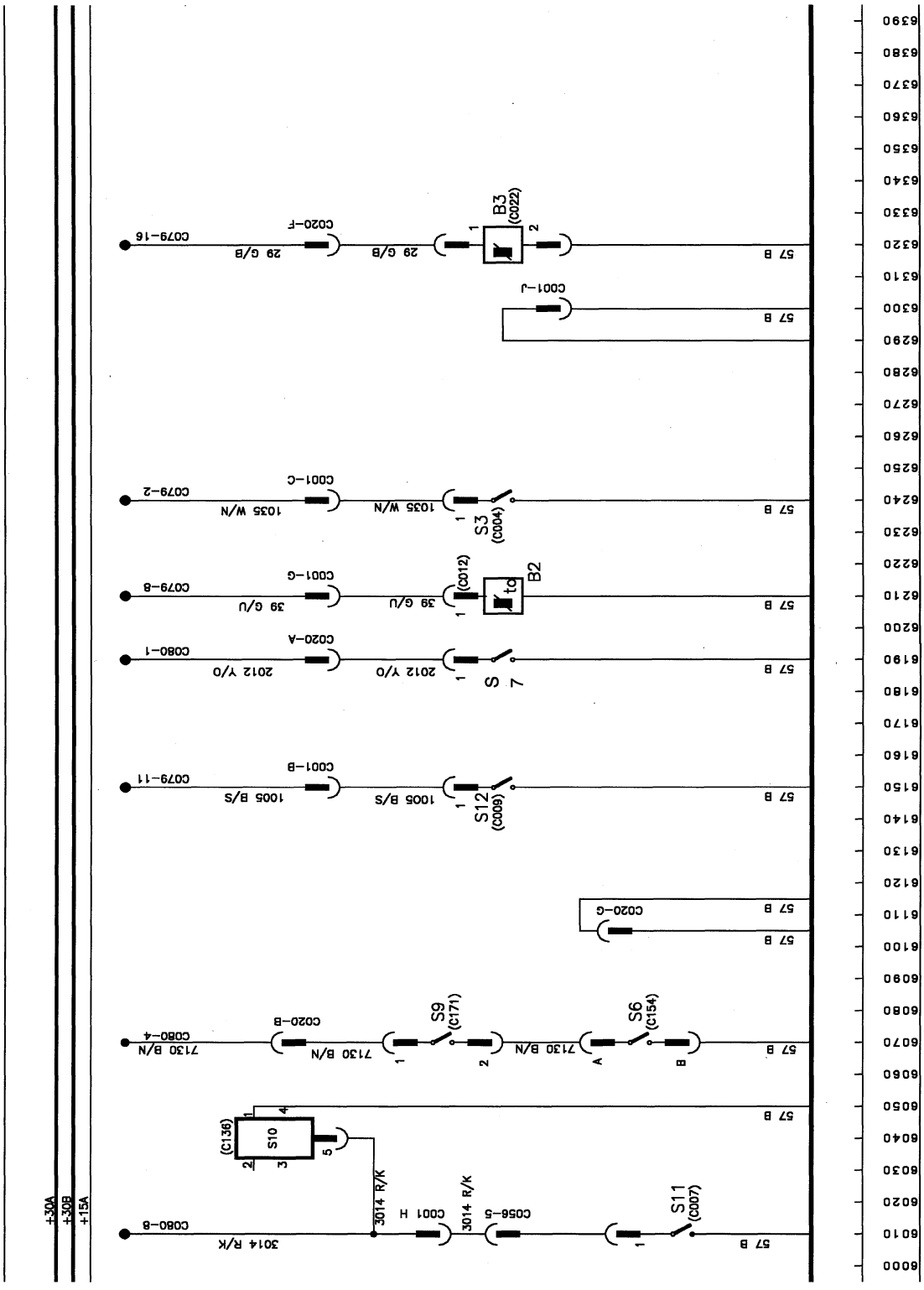
+30A
+30B
+15A
B3 (C022)
B2
S3 (C004)
S12 (C009)
S7
S9 (C171)
S6 (C154)
S10 (C136)
S11 (C007)
C079-16
C020-F
29 G/B
C001-J
57 B
C079-2
C001-C
1035 W/N
C079-8
C001-G
39 G/U
(C012)
C080-1
C020-A
2012 Y/O
C079-11
C001-B
1005 B/S
C020-G
C080-4
C020-B
7130 B/N
3014 R/K
C001 H
C056-5
C080-8
6390
6380
6370
6360
6350
6340
6330
6320
6310
6300
6290
6280
6270
6260
6250
6240
6230
6220
6210
6200
6190
6180
6170
6160
6150
6140
6130
6120
6110
6100
6090
6080
6070
6060
6050
6040
6030
6020
6010
6000

SENSORS
Line 6000-6390

B2 Engine coolant temperature sender
B3 Fuel tank sender

S3 Engine oil pressure switch
S6 Hydraulic filter blocked switch
S7 Steering pressure switch
S9 Transmission oil temperature switch
S10 Handbrake switch
S11 Brake fluid level switch
S12 Air filter vacuum switch

WIRE COLOUR CODES							
B	Black	R	Red	LG	Light Green	K	Pink
N	Brown	O	Orange	U	Blue	W	White
LN	Light Brown	Y	Yellow	TQ	Turquoise		
S	Slate	G	Green	P	Purple		

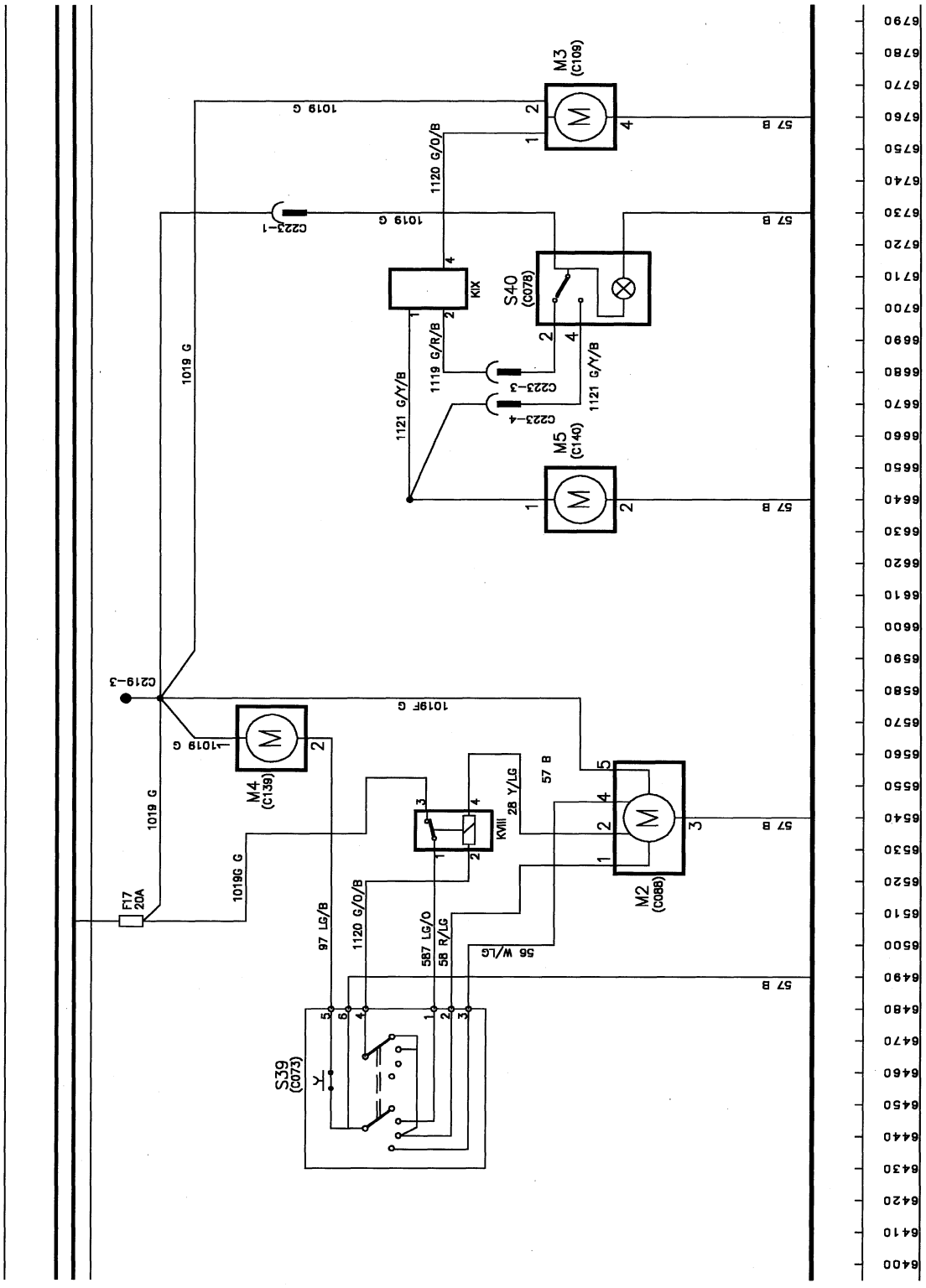
M3
(C108)
M5
(C140)
M4
(C139)
M2
(C088)
S40
(C078)
S39
(C073)
K1X
K1111
C223-1
C223-3
C223-4
C219-3
F17
20A
1019 G
1019F G
1120 G/O/B
1119 G/R/B
1121 G/Y/B
1121 G/Y/B
57 B
28 Y/LG
97 LG/B
587 LG/O
58 R/LG
56 W/LG
1019G G
6790
6780
6770
6760
6750
6740
6730
6720
6710
6700
6690
6680
6670
6660
6650
6640
6630
6620
6610
6600
6590
6580
6570
6560
6550
6540
6530
6520
6510
6500
6490
6480
6470
6460
6450
6440
6430
6420
6410
6400

WASHERS AND WIPERS
Line 6400-6790

F17 20A, Washers and wipers fuse

KVIII Intermittent front wiper relay
KIX Intermittent rear wiper relay

M2 Front wiper motor
M3 Rear wiper motor

M4 Washer motor - front
M5 Washer motor - rear

S39 Front washer/wiper switch
S40 Rear washer/wiper switch

WIRE COLOUR CODES							
B	Black	R	Red	LG	Light Green	K	Pink
N	Brown	O	Orange	U	Blue	W	White
LN	Light Brown	Y	Yellow	TQ	Turquoise		
S	Slate	G	Green	P	Purple		

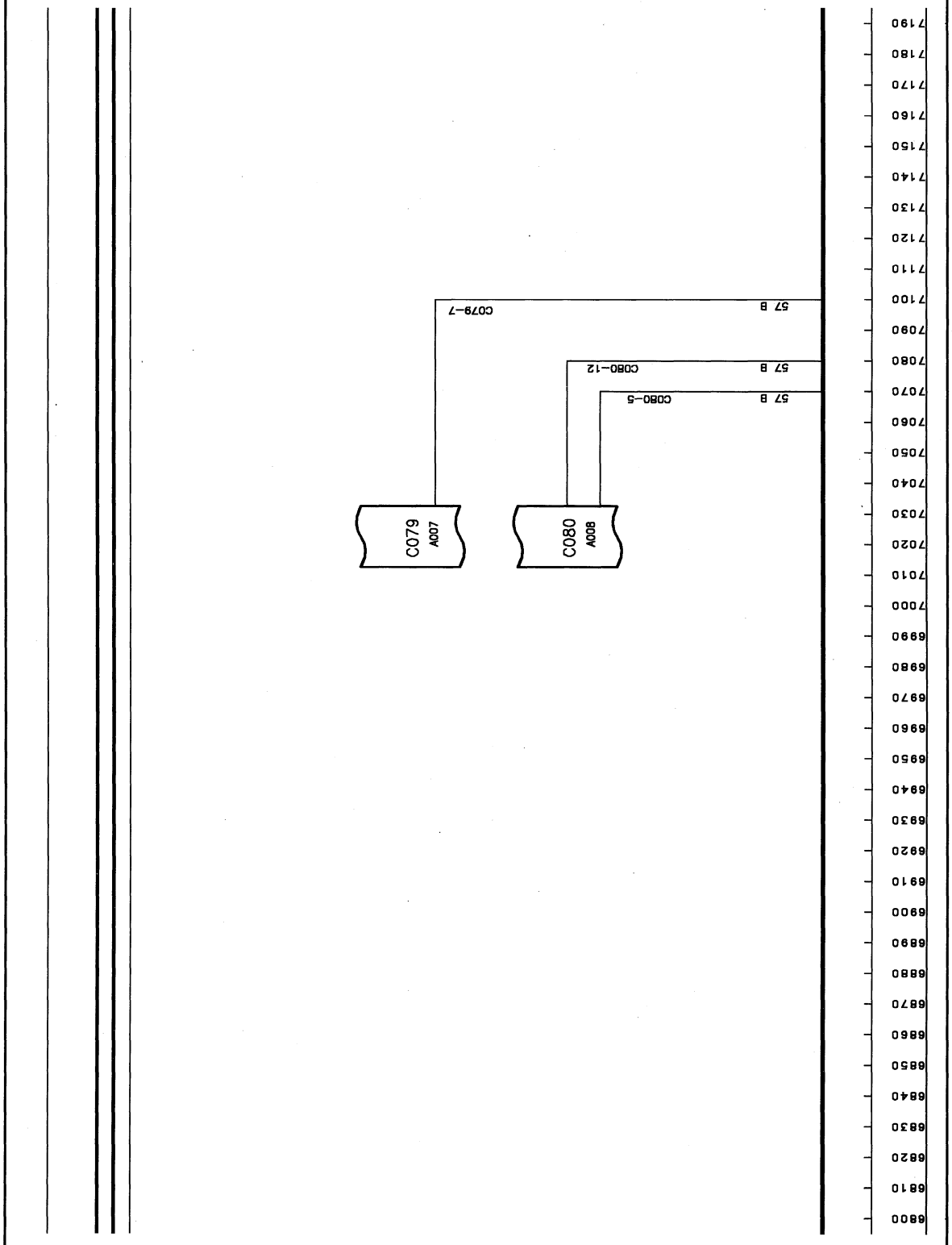
7190
7180
7170
7160
7150
7140
7130
7120
7110
7100
7090
7080
7070
7060
7050
7040
7030
7020
7010
7000
6990
6980
6970
6960
6950
6940
6930
6920
6910
6900
6890
6880
6870
6860
6850
6840
6830
6820
6810
6800
57 B
C079-7
57 B
C080-12
57 B
C080-5
C079
A007
C080
A008

PROCESSOR FEEDS AND GROUNDS
Line 6800-7190

A007 Instrument cluster
A008 Instrument cluster

WIRE COLOUR CODES							
B	Black	R	Red	LG	Light Green	K	Pink
N	Brown	O	Orange	U	Blue	W	White
LN	Light Brown	Y	Yellow	TQ	Turquoise		
S	Slate	G	Green	P	Purple		

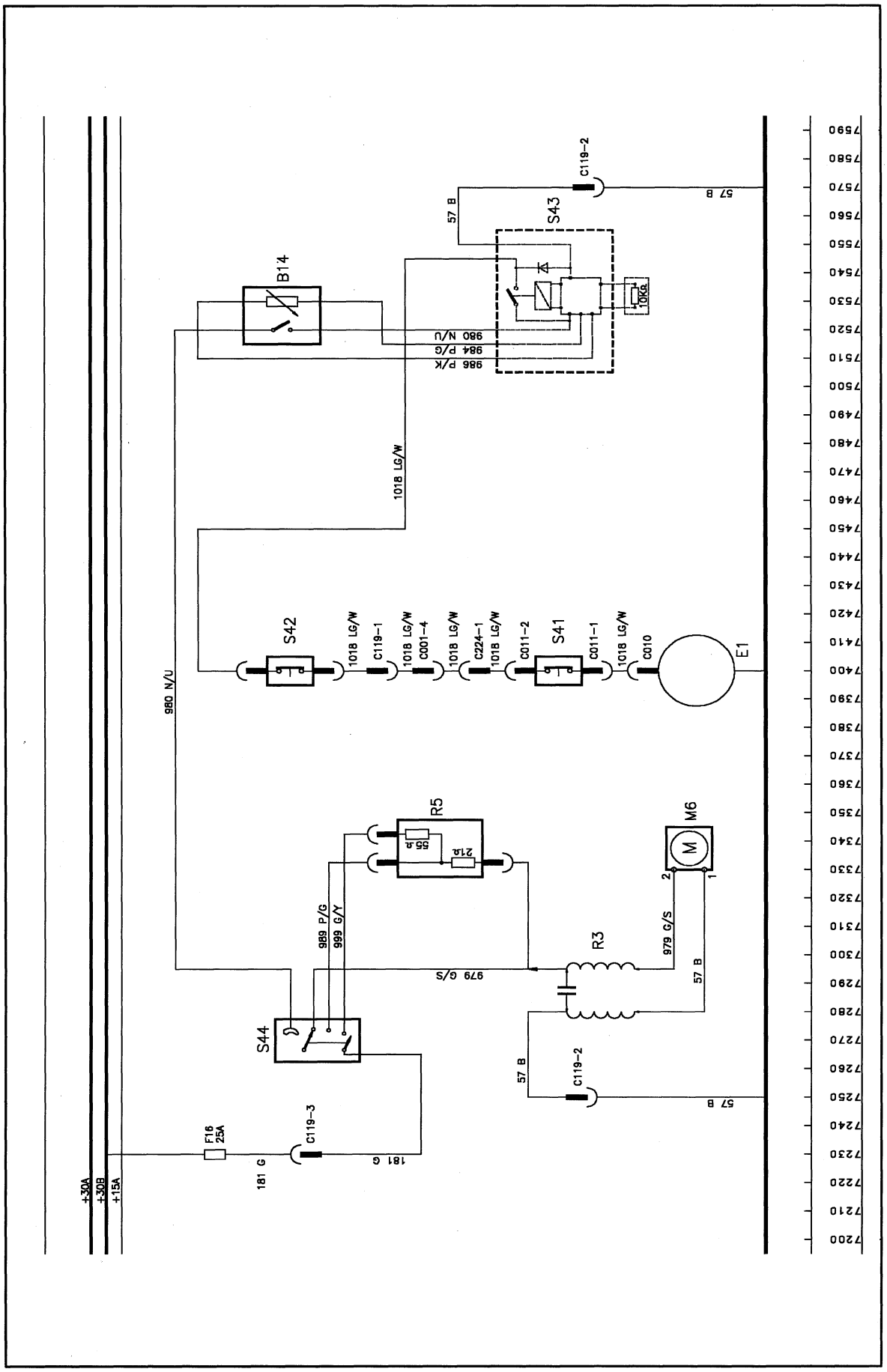
B14
S43
C119-2
57 B
980 N/U
984 P/G
986 P/K
10KΩ
1018 LG/W
S42
C119-1
C001-4
C224-1
C011-2
S41
C011-1
C010
E1
980 N/U
R5
55Ω
21Ω
M6
M
2
1
989 P/G
999 G/Y
979 G/S
R3
S44
C119-3
F16
25A
181 G
+30A
+30B
+15A
7200
7210
7220
7230
7240
7250
7260
7270
7280
7290
7300
7310
7320
7330
7340
7350
7360
7370
7380
7390
7400
7410
7420
7430
7440
7450
7460
7470
7480
7490
7500
7510
7520
7530
7540
7550
7560
7570
7580
7590

AIR CONDITIONING AND CAB HEATING
Line 7200-7590

B14 Temperature control potentiometer

E1 Air conditioning compressor clutch

F16 25A, Air Con and heater blower fuse

M6 Heater blower motor

R3 Blower speed resistor

R5 Speed resistor

S41 Air con, high/low pressure switch

S42 Low pressure cut out switch

S43 Temperature control switch

S44 Blower speed switch

WIRE COLOUR CODES							
B	Black	R	Red	LG	Light Green	K	Pink
N	Brown	O	Orange	U	Blue	W	White
LN	Light Brown	Y	Yellow	TQ	Turquoise		
S	Slate	G	Green	P	Purple		

NOTES PAGE

CIRC.	COLOUR	DESCRIPTION
10	G	STOPLAMP SWITCH FEED
12	U/W	MAIN BEAM HEADLAMP FUSE SUPPLY
13	U/R	DIP BEAM HEADLAMP FUSE SUPPLY
15	U	LIGHTING SWITCH SUPPLY
28	Y/LG	WIPER MOTOR (PARK RETURN)
29	G/B	MAIN FUEL SENDER SIGNAL
31	Y/S	ENGINE OIL PRESSURE SENDER SIGNAL
39	G/U	TEMPERATURE GAUGE SIGNAL
44	LG/N	FLASHER UNIT (49A)
49	G/W	RIGHT HAND TURN SIGNAL
50	G/R	LEFT HAND TURN SIGNAL
56	W/LG	WIPER MOTOR-HIGH
57	B	EARTH (ALL)
58	R/LG	WIPER MOTOR-LOW
63	U/LG	WIPER MOTOR-PARK FEED
65	W	DUAL POWER/4 WHEEL DRIVE SWITCH FEED
71	W	IGNITION SWITCHED FEEDS (UNFUSED)
84	G	WINDSHIELD WASHER SWITCH FEED
90	G	DUAL POWER / FOUR WHEEL DRIVE SWITCH
97	LG/B	WINDSHIELD WASHER FEED
137	W/K	RADIO FEED
138	P	RADIO KAM
150	N	BATTERY FEED (ALL)
181	G	BLOWER MOTOR FEED
182	P/LG	THERMOSTATIC SWITCH FEED
252	N/G	ALTERNATOR FIELD
365	G/O	LOW FUEL WARNING LAMP (DELAY ON)
366	O/U	LOW FUEL WARNING LAMP (DELAY SWITCH)
376	P/N	HORN FEED
587	LG/O	W1NDSHIELD WIPER INTERMITTENT DELAY
649	B/O	COOLANT TEMPERATURE SWITCH
666	P/W	DOMELAMP SWITCH FEED
787	G	AUXILIARY FUEL PUMP SUPPLY
810	G/P	STOPLAMPS
820	B/R/S	STOPLAMP SWITCH LH
830	B/U/S	STOPLAMP SWITCH RH
840	G/O	R & L STOPLAMP SIGNAL
979	G/S	BLOWER MOTOR HIGH SPEED
980	N/U	THERMOSTAT SWITCH SUPPLY
981	G/P/B	A/C CLUTCH RELAY FEED

982	G/S/B	BLOWER MOTOR FEED
984	P/G	TEMPERATURE CONTROL POT. INPUT
986	P/K	TEMPERATURE CONTROL POT. OUTPUT
989	P/G	BLOWER MOTOR MEDIUM SPEED
997	G/N	WORK LAMP-REAR FEED (OUTER)
998	G/LN	WORK LAMP-REAR FEED (INNER)
999	G/Y	BLOWER MOTOR LOW SPEED
1000	W/Y	SAFETY START SWITCH SUPPLY
1001	W/R	STARTER SOLENOID FEED
1002	P	IMPLEMENT LAMP SWITCH SUPPLY
1003	G	SUPPLY TO GAUGES
1004	G	SUPPLY TO HORN AND HEADLAMP FLASH
1005	B/S	AIR CLEANER WARNING LAMP
1006	N/Y	ALTERNATOR WARNING LAMP
1007	W	ETHER START BUTTON SUPPLY
1008	N/K	ETHER START SOLENOID SUPPLY
1009	N/P	ALTERNATOR FIELD
1010	G	IGNITION RELAY (COIL)
1011	Y/W	SUPPLY TO FUSES
1013	R	RIGHT HAND LAMPS
1014	R/B	LEFT HAND LAMPS
1015	P	DOME LAMP SWITCH FEED
1016	P/N	HORN FEED
1017	LG/G	AIR CON. THERMOSTATIC SWITCH FEED
1018	LG/W	AIR CONDITIONER CLUTCH
1019	G	WINDSHIELD WIPER FEED
1020	G	HAZARD SWITCH SUPPLY
1021	P	HAZARD SWITCH SUPPLY (BATTERY)
1022	N/R	THERMOSTART
1023	N	LIGHT SWITCH FEED
1024	R	RIGHT & LEFT HAND SIDELAMP FEED
1025	G	HZD SWITCH IGN FEED
1026	U/W	HIGH BEAM INDICATOR LAMP
1027	U/W	HEADLAMP MAIN BEAM
1028	U/W	HEADLAMP MAIN BEAM FUSE
1029	U/R	HEADLAMP DIP BEAM FUSE
1030	U/R	HEADLAMP DIP BEAM
1031	R/W	INSTRUMENT ILLUMINATION
1032	LG/P	TURN SIGNAL WARNING LAMP (TERM C)
1033	LG/Y	TURN SIGNAL WARNING LAMP (TERM C2)
1034	LG/R	TURN SIGNAL WARNING LAMP (TERM C3)

1035	W/N	ENGINE OIL PRESSURE WARNING LAMP
1036	N	IGNITION SWITCH (BATTERY)
1037	LG/N	FLASHER UNIT (TERM 49A)
1040	LG/K	FLASHER SWITCH TO RELAY-RHS CUT OUT
1041	LG/U	FLASHER SWITCH TO RELAY-LHS CUT OUT
1050	G	ACCESSORY FEED
1070	R	FRONT WORKLAMP SWITCH FEED
1071	P	WORKLAMP FRONT FEED
1072	P/U	WORKLAMP FRONT RELAY SUPPLY
1073	P	WORKLAMP FRONT FEED
1090	R	REAR WORKLAMP RELAY SIGNAL
1091	R	FRONT WORKLAMP LOWER RELAY SIGNAL
1092	R	FRONT WORKLAMP RELAY SIGNAL
1093	R	FENDER WORKLAMP RELAY SIGNAL
1096	R/Y	WORKLAMP FENDER MOUNTED
1097	R/S	FEED FRONT WORKLAMP OUTER
1098	W/B	FRONT WORKLAMP RELAY GROUND
1099	R/O	FEED FRONT WORKLAMP INNER
1119	G/R/B	RR WINDSHIELD WIPER
1120	G/O/B	RR WINDSHIELD WIPER PARK RETURN
1121	G/Y/B	RR WINDSHIELD WASH
1130	N/S	ENGINE HEATER CONTROL TO IGN SWITCH
1135	G/K/B	THERMOSTART WARNING LAMP
1140	K/W/S	THERMOSTART INITIATE SIGNAL TO RELAY
2001	N/G	BATTERY TEMPERATURE SENSOR
2002	N/P	BATTERY TEMP SENSOR (ALT OUTPUT)
2003	W/R	STARTER SOLENOID FEED
2006	U/O	DE-ICING SWITCH - AIR CONDITIONER
2009	G	FUEL PUMP SUPPLY
2010	LG/W	AIRCON PLUG TO DE-ICING SWITCH
2011	P/B	HORN RETURN
2012	Y/O	TRANS OIL PRESSURE WARNING LAMP
2013	Y/R	PTO OVERSPEED WARNING LAMP
2014	G/K	ENGINE OIL PRESSURE SENDER (+5 VOLT)
2015	W/S	TACHOMETER SENSOR-SIGNAL
2016	Y/G	REAR AXLE SPEED SENSOR-SIGNAL
2017	B/P	BULB TEST (EIC)
2018	B/R	RADAR PRESENT
2019	B/K	ENGINE RPM (TACHO MODULE TO TPM)
2020	Y/K	ENGINE SHUT DOWN (TACHO MODULE TO TPM)
2021	Y/P	AXLE GROUND SPEED (TACHO MODULE TO TPM)

2022	B/Y	PTO 540/1000 RPM (TACHO MODULE TO TPM)
2023	S	TPM TO EIC (AXLE SPEED DRIVE)
2024	S/N	RADAR SIGNAL DRIVE
2025	S/U	AUDIO ALARM CONTROL
2026	S/R	IMPLEMENT SWITCH SIGNAL
2027	R	RADAR ASSEMBLY (GUN) POWER
2028	G	RADAR ASSEMBLY (GUN) SIGNAL
2029	P	INSTRUMENT MEMORY SUPPLY
2030	N/O	ELECTRONIC DRAFT CONTROL
2040	LG/G/S	WATER IN FUEL SENSOR
2041	P/Y	FUEL SHUT OFF
2042	O/S	PTO SOLENOID-REAR
2043	O/K	PTO SOLENOID-FRONT
2045	O/G	PTO SWITCH TO MODULE
2046	O/LG	PTO SWITCH (VCC)
2047	O/W	PTO SWITCH (VCCO)
2048	O/Y	PTO SWITCH (VCCS)
2049	O/P	PTO SWITCH 1000RPM WARNING LAMP
2050	G	PTO SUPPLY
2052	W/R/B	PTO LUBE SOL
2053	P/W/B	PTO LUBE SOL RETURN
2055	B/W/S	PTO SYNCHRO GROUND SPEED ENGAGED
2060	O/LG	PTO 540/1000 SWITCH
2065	N/G/B	PTO ENGAGED
2070	O/U/B	ENGINE SHUT OFF RELAY +12V
2080	O/R	ENGINE SHUT OFF RELAY
2090	W/U	STARTER RELAY TO START INHIBIT SWITCH
2095	G/W/B	INSTRUMENT SIGNAL GROUND
2100	G/U/B	A/C CONDENSER MOTOR FEED
2120	B/LN/S	PTO BRAKE SIGNAL
2130	B/N/S	PTO BRAKE SOLENOID
2140	B/O/S	PTO SPEED SENSOR
2150	B/P/S	PTO EXT. SWITCH OFF
2200	G/N/B	SERVICE MODE INITIATE
2245	K/LN/S	PTO FRONT - SWITCH TO MODULE (MOM)
2248	K/N/S	PTO FRONT - SWITCH (VCCS)
225O	K/O/S	PTO FRONT - SUPPLY
2500	N/B/S	FRONT HITCH SOLENOID
2510	N/G/S	FRONT HITCH POSITION SIGNAL
2520	N/K/S	FRONT HITCH SET POSITION SIGNAL
2530	N/LG/S	FRONT HITCH V REF
2540	N/O/S	FRONT HITCH +12v IGN

2550	N/P/S	FRONT HITCH OVERIDE SWITCH
2560	N/R/S	FRONT HITCH 0v REF
2600	Y/G/S	REAR AXEL SPEED MONITOR
3000	G/LG	FLASHER UNIT SUPPLY (TERMINAL 49)
3001	G/R	LEFT HAND FLASHER CIRCUIT
3002	G/W	RIGHT HAND FLASHER CIRCUIT
3003	W/K	RADIO FEED
3004	G/W	RIGHT HAND TURN SIGNAL WARNING LAMP
3005	G/R	LEFT HAND TURN SIGNAL WARNING LAMP
3006	G/S	AUXILIARY FUEL TANK SENDER
3007	G/B	FUEL GAUGE FEED
3008	U/B	WORKLAMP WARNING LIGHT
3010	R/Y	FOGLAMP FEED
3011	R/Y	FOGLAMP FEED
3012	G	HANDBRAKE WARNING FEED
3013	LG/S	AUXILIARY FUEL TANK SIGNAL
3014	R/K	HANDBRAKE WARNING LAMP SIGNAL
3015	P/K	ACCESSORY SOCKET (POWER)
3020	Y	DUAL POWER SOLENOID SUPPLY
3022	Y/N	DUAL POWER (HIGH) WARNING LAMP
3025	Y/U	FOUR WHEEL DRIVE SOLENOID
3030	W/K	ACCESSORY RELAY SIGNAL
3045	Y/U/S	FOUR WHEEL DRIVE WARNING LAMP
3050	P	AUXILIARY FEED CONNECTOR SUPPLY
3051	P	CIGAR LIGHTER SUPPLY
3052	P/W	DOME LAMP TO DOOR SWITCH
3053	S/O	SPEAKER RIGHT HAND
3054	S/Y	SPEAKER NEGATIVE RH
3055	S/K	SPEAKER LEFT HAND
3056	N/B	SPEAKER NEGATIVE LH
3060	P	IMPLEMENT SOCKET RELAY
3061	P/S	IMPLEMENT SOCKET
3062	P/O	IMPLEMENT SOCKET SWITCH
3070	P	'B' PILLAR SKT SUPPLY
3075	O	TRAILER SOCKET (ACCESSORY FEED)
3076	O/N	ACCESSORY SWITCH FEED
3080	P/LN	CONSOLE LAMP
3090	Y/LN	SEAT PUMP SUPPLY
3100	B/G/S	STEERING SENSOR +5v
3120	B/K/S	STEERING SENSOR SIGNAL
3140	B/LG/S	STEERING SENSOR GROUND

3150	W/O	HANDBRAKE SWITCH (N.C CONTACT) OFF SIG
3155	W/G	HANDBRAKE TRANS INTERLOCK
4001	R/U	TRANSMISSION OIL WARNING LAMP (TEMP)
4002	R/U	TRANSMISSION OIL WARNING LAMP SWITCH
4010	N/W	RETURN TO DIG
4011	P/G	ROTATING BEACON SWITCH SUPPLY
4012	P/R	ROTATING BEACON FEED
4013	U/N	TRANS CONTROL FEED
4014	U/G	FORWARD CLUTCH SOLENOID FEED
4015	U/Y	REVERSE CLUTCH SOLENOID FEED
4016	U/K	TORQUE CONVERTOR LOCK-UP RELAY FEED
4017	U/S	TORQUE CONVERTOR LOCK-UP LAMP
4018	S/P	TORQUE CONVERTOR LOCK-UP SOLENOID FEED
4019	S/G	HYDRAULIC FILTER BY-PASS SWITCH FEED
4020	S/LG	HYDRAULIC FILTER BY-PASS LAMP
4021	S/W	BACK-UP ALARM RELAY FEED
4022	S/B	BACK-UP ALARM FEED
4025	Y/LN	4 IN 1 BUCKET FEED
4040	G	LINK LEVEL SWITCH SUPPLY
4050	W/P	LINK LEVEL RAISE
4051	W/G	LINK LEVEL LOWER
4100	TQ/Y	TRANS RANGE ENABLE SWITCH SUPPLY
4101	TQ/B	TRANS RANGE ENABLE
5000	P	EDC MEMORY POWER
5005	N/O	EDC KEY SWITCH FEED
5010	B	EDC EARTH
5011	B	EDC EARTH CASE RFI
5015	R	EDC CONTROLS BACKLIGHTING
5020	LN	EDC PROC +5V REF VOLTAGE DROP POSN/RATE
5021	K/Y	EDC PROCESSOR REF VOLT (+5V) ROCKSHAFT
5022	K/B	EDC PROCESSOR REF VOLT +5V QUADRANT
5023	K/S	EDC PROCESSOR REF VOLT +5V HEIGHT LIMIT
5025	LN/U	EDC LOWER SIGNAL
5030	LN/R	EDC RAISE SIGNAL
5035	LN/G	EDC RETURN REF. VOLTAGE EARTH
5040	LN/W	EDC DRAFT POSITION
5045	LN/Y	EDC DROP RATE
5050	LN/B	EDC QUADRANT
5055	LN/S	EDC CLOCK LINE TO DISPLAY
5060	LN/O	SERIAL DATA TO CLUSTER

5065	LN/P	EDC RIGHT PIN
5070	LN/LG	EDC LEFT PIN
5075	K	EDC VOLTAGE TO PINS
5080	K/N	EDC ROCKSHAFT
5085	K/U	EDC VALVE UP
5087	K/U/B	EDC VALVE UP RETURN
5090	K/R	EDC VALVE DOWN
5095	K/G	EDC EXTERNAL SWITCH DOWN
5097	K/G/B	EDC VALVE DOWN RETURN
5100	K/W	EDC EXTERNAL SWITCH UP
5105	S/R	EDC IMPLEMENT STATUS SWITCH
5110	K/LG	EDC LAMP SIGNAL
5115	K/P	EDC SLIP SIGNAL
5120	K/O	EDC HEIGHT LIMIT SIGNAL
5125	TQ/W	EDC RAISE SIGNAL-RAISE WORK SWITCH
5130	TQ/P	EDC WORK SIGNAL-RAISE WORK SWITCH
5135	TQ	EDC +WHEEL SPEED SIGNAL
5140	TQ/N	EDC -WHEEL SPEED SIGNAL
5145	TQ/R	EDC SLIP LIMIT POT
5150	G	EDC EXTERNAL SWITCH SUPPLY
5155	B/U	EDC LOWER LIMIT POT
5160	TQ/O	EDC HEIGHT LIMIT POT FEED
5170	LN/TQ	SERIAL DATA FROM CLUSTER
5180	TQ/G	EDC SLIP INDICATOR LAMP
5190	R/W/B	HPL INTERLOCK
5200	N/R/B	EDC VALVE SUPPLY
5210	N/S/B	EDC VALVE ENABLE
5300	K/W/B	ECU FLASH PROGRAM SIGNAL
5820	B	EDC ROCKSHAFT POT
6000	K/LG/S	ENGINE SPEED SIGNAL
6010	B/TQ/S	THROTTLE POSITION SWITCH
6100	U	ENGINE COLD ADVANCE CONTROL
7000	U/R/B	TRANS CONTROL SUPPLY
7001	U/0/B	TRANS DISPLAY ILLUMINATION
7002	U/Y/B	TRANS MAIN CLUTCH SOL (C3/C4)
7003	U/G/B	TRANS DUMP SOL
7004	U/B	TRANS FRONT CLUTCH SOL (C1/C2)
7005	U/P/B	TRANS CREEPER GR SOL
7007	R/P/B	TRANS DUAL POWER PRESSURE SWITCH HIGH
7008	R/S/B	TRANS DUAL POWER PRESSURE SWITCH LOW

7010	U/N/B	TRANS RANGE INDICATOR SWITCH (GR 1-4)
7020	U/W/B	TRANS RANGE INDICATOR SWITCH (GR 5-8)
7030	U/LG/B	TRANS RANGE INDICATOR SWITCH COMMON
7035	N/LG/B	TRANS DUMP SOLENOID FEED
7040	U/LN/B	TRANS CREEPER SWITCH
7050	R/G/B	TRANS RELAY SUPPLY - RUN
7060	R/K/B	TRANS RELAY SUPPLY - START
7070	R/LG/B	TRANS FEED
7071	N/K/B	FEED HYD FILTER RESTRICTION IND LAMP
7080	B/LG	DIFF-LOCK SOLENOID FEED
7090	LG	DIFF-LOCK SWITCH TO BRAKE SWITCH
7100	N/LG	DIFF-LOCK RELAY TO BRAKE SWITCH
7110	R/Y/B	PTO INHIBITOR SWITCH TO TRANS
7120	Y/B	DIFF-LOCK WNG LP
7130	B/N	HYD FILTER WNG LP
7140	O/B	DIFF-LOCK OFF SOLENOID
7150	S/G/B	LOW OIL PRESSURE WRN FEED
7160	R/N/B	HYD LOW CHARGE WARNING
7170	B/W	DIFF LOCK SWITCH OUTPUT
7180	U/TQ	CREEPER SWITCH MOM SIGNAL
7190	K/G/S	TRANS SOLENOID VALVE SUPPLY
7195	K/U/S	TRANS SOLENOID VALVE RETURN
7200	S/K/B	TRANSMISSION SHIFT DOWN
7210	S/LG/B	TRANSMISSION SHIFT UP
7220	S/N/B	TRANSMISSION HIGH RANGE
7225	W/LG/B	TRANS HI RANGE SOL - RET
7230	S/O/B	TRANSMISSION LOW RANGE
7235	Y/LN/B	TRANS LOW RANGE SOL - RET
7240	S/P/B	TRANSMISSION DISPLAY SWITCH
7250	S/R/B	TRANSMISSION FORWARD SIGNAL
7260	S/U/B	TRANSMISSION REVERSE SIGNAL
7265	K/Y/S	TRANS NEUTRAL SWITCH TO PROCESSOR (GR.SW 1)
7267	LG/N/S	TRANS NEUTRAL SWITCH 2 TO PROCESSOR
7270	R/G	TCM SERIAL DATA IN-DISPLY DATA OUT
7275	W/U/B	TCM SERIAL DATA OUT-DISPLY DATA IN
7280	W/G/B	LIMP HOME SWITCH 18x18 TRANS.
7290	W/K/B	DIRECTIONAL INTERRUPT RELAY TO SOLENOID
7300	W/LG/B	SOLENOID 1 18x9 TRANSMISSION
7301	Y/LN/B	SOLENOID 1 18x9 RETURN
7320	W/N/B	SOLENOID 2 18x9 TRANSMISSION
7321	P/Y/B	SOLENOID 2 18x9 RETURN
7330	W/P/B	SOLENOID 3 18x9 TRANSMISSION

7331	Y/S/B	SOLENOID 3 18x9 RETURN
7340	W/R/B	SOLENOID F1 18x9 TRANSMISSION
7341	Y/W/B	SOLENOID F1 18x9 RETURN
7350	W/S/B	SOLENOID F2 18x9 TRANSMISSION
7351	S/W/B	SOLENOID F2 18x9 RETURN
7355	S/Y/B	SOLENOID R 18x9 TRANSMISSION
7356	U/S/B	SOLENOID R 18x9 RETURN
7360	W/Y/B	SOLENOID A 18x9 TRANSMISSION
7361	P/LG/B	SOLENOID A 18x9 RETURN
7370	Y/G/B	SOLENOID B 18x9 TRANSMISSION
7371	P/N/B	SOLENOID B 18x9 RETURN
7380	Y/K/B	SOLENOID C 18x9 TRANSMISSION
7381	P/O/B	SOLENOID C 18x9 RETURN
7390	Y/LG/B	SOLENOID PMW (F1) 18x9 TRANSMISSION
7391	P/R/B	SOLENIOD PWM (F1) 18x9 RETURN
7392	O/G/B	SOLENOID PWM (F2) 18x9 TRANSMISSION
7393	O/N/B	SOLENOID PWM (F2) 18x9 RETURN
7395	P/S/B	SOLENOID CREEP 18x9 TRANSMISSION
7396	P/W/B	SOLENOID CREEP 18x9 RETURN
7400	Y/N/B	TRANS RPM SPEED SENSOR TO TCM INPUT
7401	P/B/G	TRANS RPM SPEED SENSOR
7410	Y/O/B	TRANS RPM SPEED SENSOR TO TCM OUTPUT
7420	Y/P/B	TCM TO CLUTCH POSITION SWITCH
7430	Y/R/B	CLUTCH POSITION SIGNAL
7431	TQ/W/B	CLUTCH 'A' SUPPY
7440	Y/U/B	TCM TO TRACTOR EIC-AXLE OUTPUT
7450	W/LN/B	TRANS CREEPER INTERLOCK SUPPLY
7460	W/O/B	TRANS CREEPER CLUTCH ENGAGED
7470	S/LN/B	TRANS CREEPER CLUTCH DISENGAGED
7480	G/K/S	TRANS AUTO FUNCTION 1
7485	K/P/S	TRANS AUTO FUNCTION LAMP 1
7490	G/LG/S	TRANS AUTO FUNCTION 2
7495	K/R/S	TRANS AUTO FUNCTION LAMP 2
7500	B/G	TRANS OIL TEMP. SENSOR
7520	G/N/S	TRANS SENSOR SUPPLY 8v
7525	G/B/S	TRANS SENSOR SUPPLY 5v
7560	G/LN/S	TRANS WARNING LAMP
7570	B	SIGNAL GROUND
7580	U/K/B	CREEPER SOLENOID MONITOR
7590	O/W/B	TRANS CREEPER GEAR STATUS LAMP
7600	N/W/B	TRANS FEATHERING SOLENOID
7620	N/Y/B	TRANS FEATHERING SOL. MONITOR

7630	N/U/B	TRANS MAIN CLUTCH PRESSURE SWITCH
7640	B/LN	DIAGNOSTIC PLUG RS232 IN
7650	W/LN	DIAGNOSTIC PLUG RS232 OUT
7660	R/U/B	TRANS CLUTCH DISCONNECT
7700	LN/N/B	TRANS SHUTTLE DUMP SWITCH
7710	LN/O/B	TRANS OIL TEMPERATURE SWITCH
7735	LN/P/B	TRANS MID SPEED SIGNAL +
7740	LN/R/B	TRANS MID SPEED SIGNAL -
7750	R/B/S	TCM TO DOG 30/40 KPH SELECT
7760	W/N/B	TORQUE SENSOR
7810	K/N/B	TRANS PWM SOLENOID C1
7815	K/O/B	TRANS PWM SOLENOID C1 RETURN
7820	K/P/B	TRANS PWM SOLENOID C2
7825	K/R/B	TRANS PWM SOLENOID C2 RETURN
7830	K/S/B	TRANS PWM SOLENOID C3
7835	K/U/B	TRANS PWM SOLENOID C3 RETURN
7840	K/W/B	TRANS PWM SOLENOID C4
7845	K/Y/B	TRANS PWM SOLENOID C4 RETURN
7850	G/P/S	TRANS DIAGNOSTIC PROGRAM VOLTAGE
7855	G/R/S	TRANS DIAGNOSTIC EA
7860	G/U/S	TRANS DIAGNOSTIC RCV
7865	G/W/S	TRANS DIAGNOSTIC XMT
7870	G/Y/S	TRANS DIAGNOSTIC RTS
7875	K/B/S	TRANS DIAGNOSTIC CTS
7880	B	T C M SIGNAL GROUND
7900	TQ/K/B	CLUTCH 'A' SIGNAL
7910	TQ/N/B	CLUTCH 'B' SIGNAL
7915	P/O/S	TCM CLUTCH B RETURN
7920	TQ/O/B	CLUTCH 'C' SIGNAL
7925	P/R/S	TCM CLUTCH C RETURN
7930	TQ/R/B	CLUTCH 'D' SIGNAL
7935	P/N/S	TCM CLUTCH D RETURN
7940	TQ/S/B	CLUTCH 'E' SIGNAL
7945	P/TQ/S	TCM CLUTCH E RETURN
7950	TQ/Y/B	CLUTCH SUPPLY
7960	P/K/B	TRANS SLOW/FAST
7965	P/K/S	HI/LO SYNCHRO SIGNAL
7970	P/TQ/B	TRANS MED/REV
7980	K/LG/B	TRANS MED RANGE
7982	W/P/B	TRANS MED RANGE RET
7985	G/O/S	TRANS REVERSE RANGE
7990	K/R/B	TRANS BRAKE

8000	N/TQ/B	TRAILER BRAKE SOLENOID
8010	LN/W/B	TRAILER BRAKE PRESSURE
8020	LN/K/B	TRAILER BRAKE PRESSURE
8030	LG/O/S	TRANS FWD SOLENIOD
8035	P/LG/S	TRANS FWD SOL RET
8040	LG/P/S	TRANS REV SOLENIOD
8045	P/LN/S	TRANS REV SOL RET
9000	LN/S/B	DIVERTER VALVE
9010	LN/U/B	DIVERTER VALVE SUPPLY
9020	LN/Y/B	HYDRAULIC REMOTE VALVE SOL
9025	LN/G/B	HYDRAULIC REMOTE VALVE SWITCH

NOTES PAGE

ELECTRICAL SYSTEM DIAGRAMS

POWER SHUTTLE ELECTROSHIFT AND DUAL COMMAND MODELS

Fold out for Key to Electroshift Electrical System Diagram.

ELECTROSHIFT ELECTRICAL SYSTEM DIAGRAM

1. BATTERY
2. MAXI FUSES
3. IGNITION SWITCH
4. IGNITION RELAY
5. CREEPER SWITCH
6. SHUT DOWN RELAY
7. FUEL SHUT OFF SOLENOID
8. POWER TAKE OFF MODULE
9. PTO SWITCH
10. SEAT SWITCH
11. STARTER RELAY
12. SHUTTLE NEUTRAL SWITCH
13. CLUTCH PEDAL SWITCH
14. GEAR DISPLAY MODULE
15. DIFFERENTIAL LOCK SWITCH
16. BRAKE PEDAL SWITCHES
17. RAISE/WORK/LOWER SWITCH
18. EDC FENDER SWITCHES
19. EDC CONTROL PANEL
20. SENSOR SIGNAL GROUND
21. CHASSIS GROUND
22. POWER GROUND
23. SYSTEM DIAGNOSTICS CONNECTOR
24. EDC/TRANS PROCESSOR
25. DIGITAL INSTRUMENT CLUSTER

INSTRUMENT CLUSTER - TERMINALS

C079 - 1. TRAILER 2
2. ENGINE OIL PRESSURE
3. TRAILER 1
4. NOT USED
5. LEFT TURN
6. BATTERY VOLTAGE INPUT SWITCHED - FUSE 9
7. SIGNAL GROUND
8. ENGINE COOLANT TEMPERATURE
9. ALTERNATOR CHARGING
10. MAIN BEAM
11. AIR FILTER
12. THERMOSTART
13. NOT USED ON 16 X 16
14. BACKLIGHT POWER
15. BATTERY VOLTAGE INPUT CONTINUOUS - FUSE 20
16. FUEL LEVEL

C080 - 1. TRANSMISSION OIL PRESSURE AND STEERING PRESSURE
2. DIFFERENTIAL LOCK
3. 4WD 'ON'
4. HYDRAULIC OIL TEMPERATURE
5. -
6. TRANSMISSION OIL TEMPERATURE
7. NOT USED ON 16 X 16
8. BRAKE FLUID LEVEL AND HANDBRAKE SWITCHES
9. PARK BRAKE +12V.
10. ENGINE RPM
11. PTO 1000
12. EARTH / GROUND
13. EARTH / GROUND
14. RIGHT TURN
15. LOW HYDRAULIC CHARGE PRESSURE
16. EARTH / GROUND
17. ALARM - EXTERNAL TRIGGER
18. EARTH / GROUND
19. SERIAL DATA IN
20. SERIAL DATA OUT

C081 - 1, WHEEL SPEED
2. IMPLEMENT STATUS
3. RADAR SENSE
4. RADAR
5. +5V REF
6. ENGINE OIL PRESSURE
7. ENGINE SHUT DOWN (+V OUT)
8. ENGINE SHUT DOWN (RETURN)
9. FUEL LEVEL GROUND
10. EARTH / GROUND
11. ENGINE OIL PRESSURE GROUND
12. EARTH / GROUND

PROCESSOR TERMINALS (C127=Red connector / C128=Black connector / C242=Red Connector, rear)

C127 - 1. SENSOR EARTH / GROUND
2. DIFFERENTIAL LOCK - AUTO
3. CREEPER SWITCH LAMP
4. -
5. +5 VOLT REFERENCE LINE
6. WHEEL SPEED SENSOR
7. IMPLEMENT STATUS
8. WHEEL SPEED - OUT
9. CASE EARTH / GROUND
10. 4WD SOLENOID
11. PWM 1 - (C1)
12. PWM 4 - RETURN
13. PWM 2 - RETURN
14. PWM 2 (C2)
15. CREEPER SOLENOID
16. DIFFERENTIAL LOCK SOLENOID
17. PWM 4 (C4)
18. PWM 3 (C3)
19. LOWER PWM
20. RAISE PWM
21. GEAR DISPLAY - 2
22. GEAR DISPLAY - 1
23. SLIP LAMP
24. STATUS LAMP
25. + 8.5 VOLTS FOR DRAFT PINS
26. PWM 3 - RETURN
27. -
28. -
29. FUSE 14 - INPUT
30. FUSE 12 - + 12V INPUT
31. FUSE 20 (CONTINUOUS + 12v SUPPLY)
32. EARTH / GROUND
33. EARTH / GROUND
34. FUSE 13 - +12v INPUT
35. FUSE 13 - +12V INPUT
36. PWM 1 - RETURN

C128 - 1. HIGH RANGE SWITCH
2. LOW RANGE SWITCH
3. 1 - 4 GEAR RANGE SWITCH
4. 5 - 8 GEAR RANGE SWITCH
5. UPSHIFT SWITCH
6. FUSE 12 SENSE
7. BRAKE SWITCH - LEFT
8. ROCK SHAFT POT
9. DROP RATE CONTROL
10. DRAFT / POSITION CONTROL
11. RIGHT HAND DRAFT PIN
12. PROGRAMME ENABLE
13. RS232 OUT
14. SERIAL IN
15. RADAR
16. SLIP CONTROL
17. SYNCHRO POSITION POTENTIOMETER
18. TRANSMISSION OIL TEMPERATURE
19. CLUTCH PEDAL POT.
20. RIGHT BRAKE SWITCH
21. EXTERNAL UP
22. SERVICE
23. SHUTTLE DUMP SWITCH
24. DOWN SHIFT SWITCH
25. DIFFERENTIAL LOCK MANUAL
26. RAISE SWITCH
27. NEUTRAL SWITCH INPUT
28. EXTERNAL DOWN
29. WORK SWITCH
30. QUADRANT LEVER POT.
31. HEIGHT LIMIT CONTROL
32. OIL TEMPERATURE SWITCH
33. LEFT HAND DRAFT PIN
34. ENGINE RPM
35. SERIAL OUT
36. RS232 IN

C242 - 1. EDC RAISE PWM RETURN
4. HANDBRAKE SWITCH
13. SEAT SWITCH
18. LOUD WARNING BUZZER
22. FORWARD PWM RETURN
23. REVERSE PWM RETURN
24. EDC LOWER PWM RETURN
27. REVERSE PWM VALVE
28. FORWARD PWM VALVE
32. FORWARD SHUTTLE SWITCH
33. REVERSE SHUTTLE SWITCH

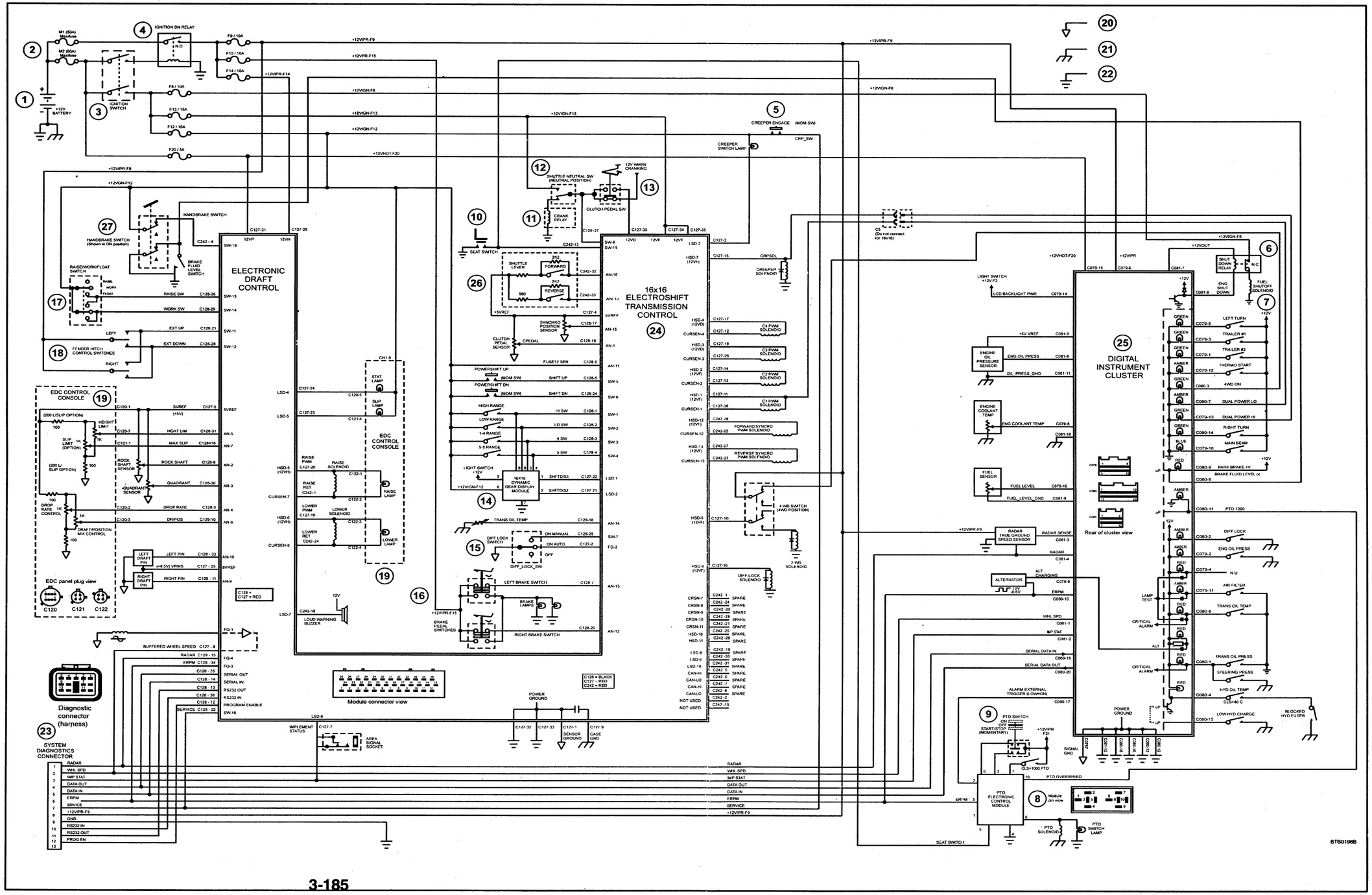
ELECTRONIC DRAFT CONTROL
16x16 ELECTROSHIFT TRANSMISSION CONTROL
DIGITAL INSTRUMENT CLUSTER
EDC CONTROL CONSOLE
EDC panel plug view
Diagnostic connector (harness)
SYSTEM DIAGNOSTICS CONNECTOR
Module connector view
Rear of cluster view
PTO ELECTRONIC CONTROL MODULE
IGNITION ON RELAY
IGNITION SWITCH
CREEPER ENGAGE (MOM SW)
CLUTCH PEDAL SW
HANDBRAKE SWITCH
SEAT SWITCH
LEFT BRAKE SWITCH
RIGHT BRAKE SWITCH
LOUD WARNING BUZZER
BTB0196B

DUAL COMMAND ELECTRICAL SYSTEM DIAGRAM

1. BATTERY
2. MAXI FUSES
3. IGNITION SWITCH
4. IGNITION RELAY
5. P.T.O. SWITCH
6. SHUT DOWN RELAY
7. FUEL SHUT OFF SOLENOID
8. POWER TAKE OFF MODULE
9. SEAT SWITCH
10. STARTER SOLENOID
11. STARTER RELAY
12. START INHIBITOR SWITCH
13. CLUTCH PEDAL SWITCH
14. BRAKE LAMPS
15. DIFFERENTIAL LOCK SWITCH
16. BRAKE PEDAL SWITCHES
17. RAISE/WORK/LOWER SWITCH
18. EDC FENDER SWITCHES
19. EDC CONTROL PANEL
20. SENSOR SIGNAL GROUND
21. CHASSIS GROUND
22. POWER GROUND
23. SYSTEM DIAGNOSTICS CONNECTOR
24. EDC/TRANS PROCESSOR
25. DIGITAL INSTRUMENT CLUSTER

INSTRUMENT CLUSTER - TERMINALS

C079 - 1. TRAILER 2
2. ENGINE OIL PRESSURE
3. TRAILER 1
4. NOT USED
5. LEFT TURN
6. BATTERY VOLTAGE INPUT SWITCHED - FUSE 9
7. SIGNAL GROUND
8. ENGINE COOLANT TEMPERATURE
9. ALTERNATOR CHARGING
10. MAIN BEAM
11. AIR FILTER
12. THERMOSTART
13. DUAL COMMAND - HI
14. BACKLIGHT POWER
15. BATTERY VOLTAGE INPUT CONTINUOUS - FUSE 20
16. FUEL LEVEL

C080 - 1. TRANSMISSION OIL PRESSURE AND STEERING PRESSURE
2. DIFFERENTIAL LOCK
3. 4WD 'ON'
4. HYDRAULIC OIL TEMPERATURE
5. -
6. TRANSMISSION OIL TEMPERATURE
7. DUAL COMMAND - LO
8. BRAKE FLUID LEVEL AND HANDBRAKE SWITCHES
9. PARK BRAKE +12V.
10. ENGINE RPM
11. PTO 1000
12. EARTH / GROUND
13. EARTH / GROUND
14. RIGHT TURN
15. LOW HYDRAULIC CHARGE PRESSURE
16. EARTH / GROUND
17. ALARM - EXTERNAL TRIGGER
18. EARTH / GROUND
19. SERIAL DATA IN
20. SERIAL DATA OUT

C081 - 1, WHEEL SPEED
2. IMPLEMENT STATUS
3. RADAR SENSE
4. RADAR
5. +5V REF
6. ENGINE OIL PRESSURE
7. ENGINE SHUT DOWN (+V OUT)
8. ENGINE SHUT DOWN (RETURN)
9. FUEL LEVEL GROUND
10. EARTH / GROUND
11. ENGINE OIL PRESSURE GROUND
12. EARTH / GROUND

PROCESSOR TERMINALS (C127=Red connector / C128=Black connector)

C127 - 1. SENSOR EARTH / GROUND
2. DIFFERENTIAL LOCK - AUTO
3. NOT USED
4. -
5. +5 VOLT REFERENCE LINE
6. WHEEL SPEED SENSOR
7. IMPLEMENT STATUS
8. WHEEL SPEED - OUT
9. CASE EARTH / GROUND
10. 4WD SOLENOID
11. DUAL COMMAND LO LAMP
12. HIGH PWM RETURN
13. DUMP SOLENOID RETURN
14. DUMP SOLENOID
15. DUAL COMMAND HI LAMP
16. DIFFERENTIAL LOCK SOLENOID
17. HIGH PWM
18. LOW PWM
19. LOWER PWM
20. RAISE PWM
21. NOT USED
22. NOT USED
23. SLIP LAMP
24. STATUS LAMP
25. + 8.5 VOLTS FOR DRAFT PINS
26. LOW PWM RETURN
27. LOWER PWM RETURN
28. RAISE PWM RETURN
29. FUSE 14 - INPUT
30. FUSE 12 - + 12V INPUT
31. FUSE 20 (CONTINUOUS + 12v SUPPLY)
32. EARTH / GROUND
33. EARTH / GROUND
34. FUSE 13 - +12v INPUT
35. FUSE 13 - +12V INPUT
36. NOT USED

C128 - 1. NOT USED
2. 1-2 / 3-4 SWITCHES
3. HI / MED / NEUTRAL SWITCH
4. NOT USED
5. UPSHIFT SWITCH
6. FUSE 12 SENSE
7. BRAKE SWITCH - LEFT
8. ROCK SHAFT POT.
9. DROP RATE CONTROL
10. DRAFT / POSITION CONTROL
11. RIGHT HAND DRAFT PIN
12. PROGRAMME ENABLE
13. RS232 OUT
14. SERIAL IN
15. RADAR
16. SLIP CONTROL
17. 2ND CLUTCH PEDAL SENSOR (IF FITTED)
18. TRANSMISSION OIL TEMPERATURE
19. CLUTCH PEDAL POT.
20. RIGHT BRAKE SWITCH
21. EXTERNAL UP
22. SERVICE
23. SHUTTLE DUMP SWITCH
24. DOWN SHIFT SWITCH
25. DIFFERENTIAL LOCK MANUAL
26. RAISE SWITCH
27. START SWITCH INPUT
28. EXTERNAL DOWN
29. WORK SWITCH
30. QUADRANT LEVER POT.
31. HEIGHT LIMIT CONTROL
32. OIL TEMPERATURE SWITCH
33. LEFT HAND DRAFT PIN
34. ENGINE RPM
35. SERIAL OUT
36. RS232 IN

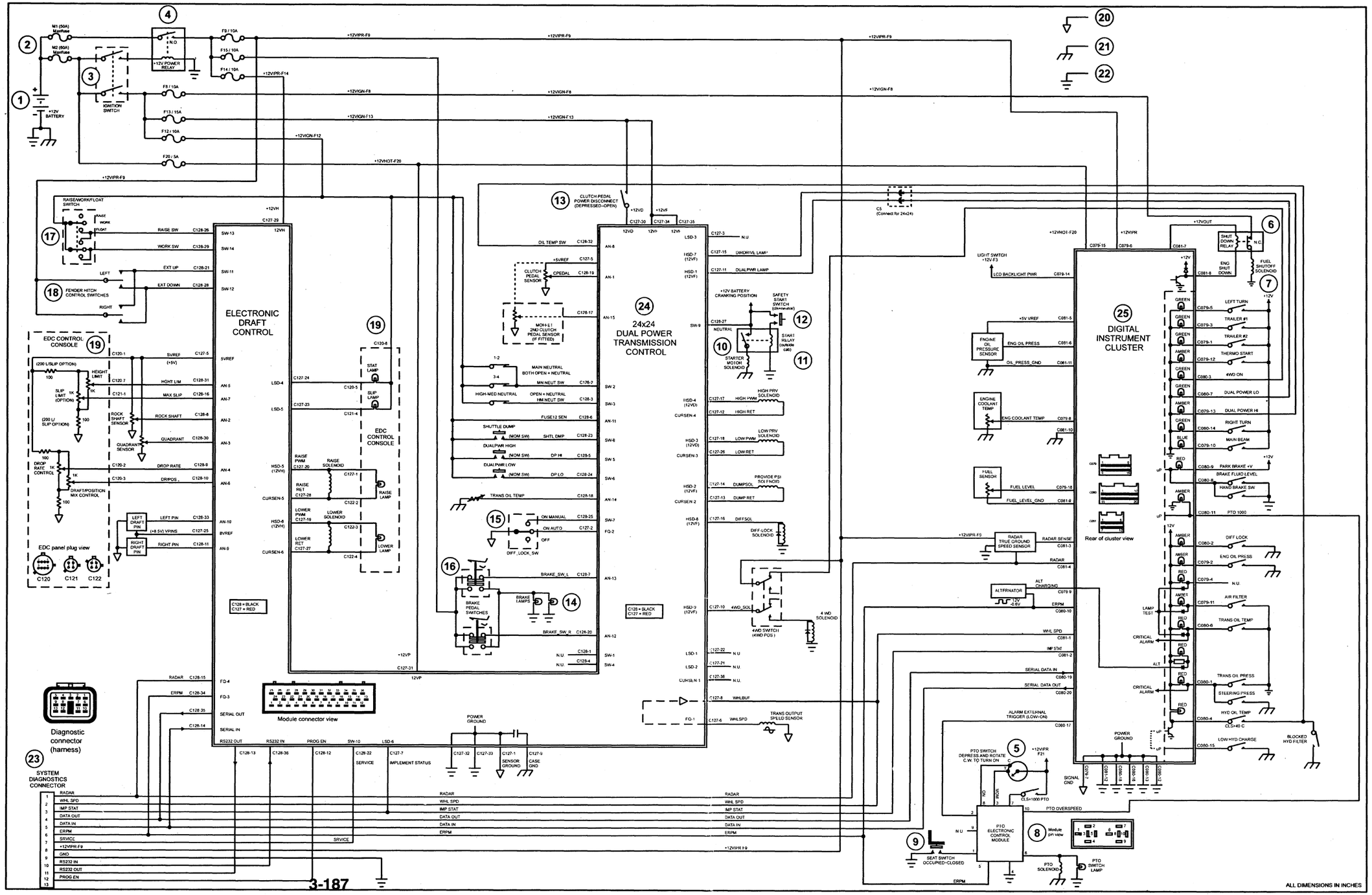
ELECTRONIC DRAFT CONTROL
24x24 DUAL POWER TRANSMISSION CONTROL
DIGITAL INSTRUMENT CLUSTER
EDC CONTROL CONSOLE
EDC panel plug view
C120
C121
C122
Diagnostic connector (harness)
Module connector view
SYSTEM DIAGNOSTICS CONNECTOR
Rear of cluster view
PTO ELECTRONIC CONTROL MODULE
SEAT SWITCH OCCUPIED-CLOSED
PTO SWITCH DEPRESS AND ROTATE C.W. TO TURN ON
PTO OVERSPEED
PTO SOLENOID
PTO SWITCH LAMP
M1 (50A) Maxifuse
M2 (60A) Maxifuse
+12V POWER RELAY
IGNITION SWITCH
+12V BATTERY
RAISE/WORK/FLOAT SWITCH
FENDER HITCH CONTROL SWITCHES
CLUTCH PEDAL POWER DISCONNECT (DEPRESSED=OPEN)
CLUTCH PEDAL SENSOR
MOHELI 2ND CLUTCH PEDAL SENSOR (IF FITTED)
BRAKE PEDAL SWITCHES
BRAKE LAMPS
DIFF_LOCK_SW
4WD SWITCH (4WD POS.)
4 WD SOLENOID
DIFF LOCK SOLENOID
PROVIDE PSI SOLENOID
HIGH PRV SOLENOID
LOW PRV SOLENOID
STARTER MOTOR SOLENOID
START RELAY (Shown de-energized)
SAFETY START SWITCH (Shown de-energized)
TRANS OUTPUT SPEED SENSOR
SHUT DOWN RELAY
FUEL SHUTOFF SOLENOID
ENGINE OIL PRESSURE SENSOR
ENGINE COOLANT TEMP
FUEL SENSOR
RADAR TRUE GROUND SPEED SENSOR
ALTERNATOR
LIGHT SWITCH +12V-F3
LCD BACKLIGHT PWR
ENG OIL PRESS
OIL_PRESS_GND
ENG COOLANT TEMP
FUEL LEVEL
FUEL_LEVEL_GND
ALT CHARGING
ERPM
WHL SPD
IMP STAT
SERIAL DATA IN
SERIAL DATA OUT
ALARM EXTERNAL TRIGGER (LOW=ON)
SIGNAL GND
POWER GROUND
BLOCKED HYD FILTER
LEFT TURN
TRAILER #1
TRAILER #2
THERMO START
4WD ON
DUAL POWER LO
DUAL POWER HI
RIGHT TURN
MAIN BEAM
PARK BRAKE +V
BRAKE FLUID LEVEL
HAND BRAKE SW
PTO 1000
DIFF LOCK
ENG OIL PRESS
AIR FILTER
TRANS OIL TEMP
TRANS OIL PRESS
STEERING PRESS
HYD OIL TEMP
LOW HYD CHARGE
+12V BATTERY CRANKING POSITION
+12VIPR-F9
+12VIGN-F8
+12VIGN-F13
+12VIGN-F12
+12VHOT-F20
+12VHOT1-F20
+12VOUT
+12VIPR
+12VIPR-F5
+12VIPR F9
+12VIGN F8
ALL DIMENSIONS IN INCHES

ELECTRICAL SYSTEM DIAGRAM

DUAL COMMAND MODEL

NOTES PAGE

Diagnostic 'H' Routines
Electroshift Transmission (16x16 Power Shuttle) From Serial No.139307B

INTRODUCTION

The TS range of tractors has a built in diagnostic system.

To gain access to the diagnostic 'H' menu mode routine it is necessary to use the diagnostic test switch, Tool No. 4FT 950, in the tractor diagnostic connector (C125), located behind the right-hand Instrument Control Panel.

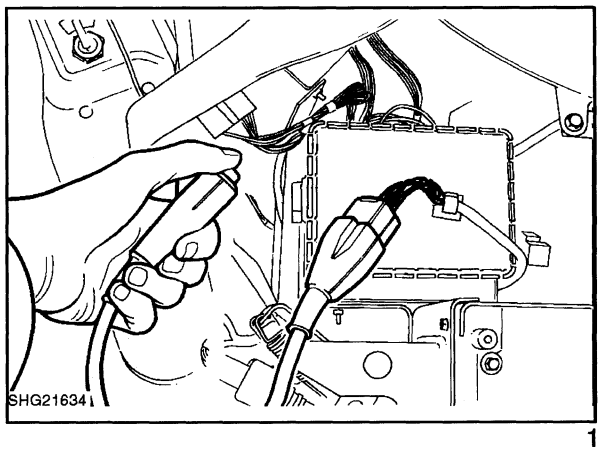

1

The Instrument Cluster, either EIC (A) or AEIC (B), is used to display the information.

Connect Tool No. 4FT 950 to the diagnostic connector and turn the key start switch ON.

The display will show 'HH' to indicate that the 'H' menu has been activated.

1. Transmission display
2. Electronic Draft Control display

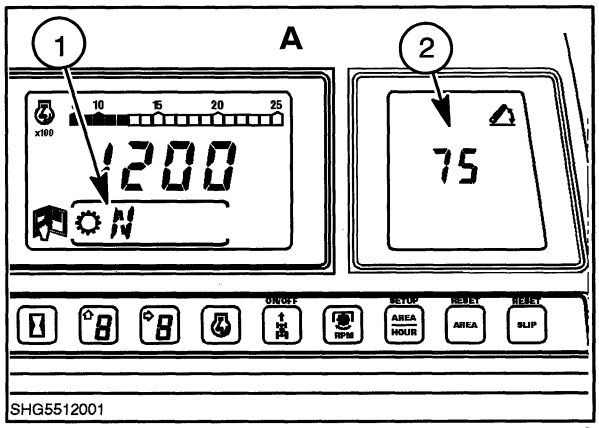

2

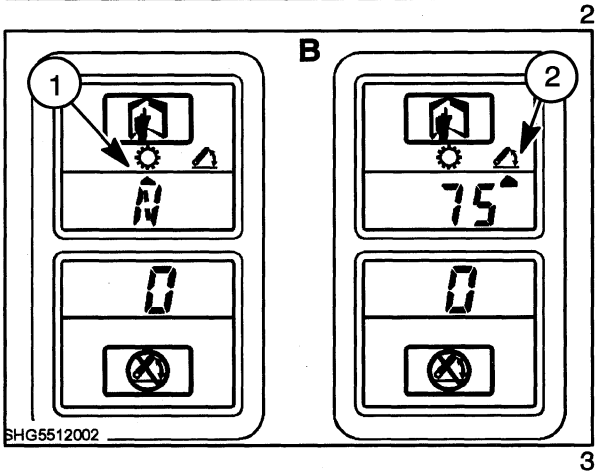

3

Electroshift (16x16 Power Shuttle)
Transmission 'H' Routines

The 'H' routine consists of the following H menu codes:

HH	Service Menu	Page
H1	Transmission clutch spring pressure and synchroniser calibration	191
H2	Transmission clutch spring pressure and synchroniser calibration review and C3/C4 clutches manual calibration adjustment	195
H3	(EDC valve calibration values)	196
H4	Software revision level	196
H5	Switch test	197
H6	Select rear tyre rolling radius	198
H7	Auto radius calibration (400 Foot/122m Dash)	200
H8	Non volatile memory reset (Erase Calibrations)	201
H9	Vehicle sensor operation display	202
HA	Clutch pedal position display and oil temperature	205
HB	View stored error codes	205
HC	Clear stored error codes	208
HD	View live error codes	208
HE	Clutch Quick fill time adjustment	209
HF	4WD Braking - Engagement speed adjustment	211
HJ	Hand brake loud buzzer control	212

H1 MENU MODE-
Spring Pressure And Synchroniser Calibration

Entering the calibration mode :

Install diagnostic tool 4FT950 into the Black diagnostic connector, located by the fuse box.

Start the tractor.

Enter mode H1.

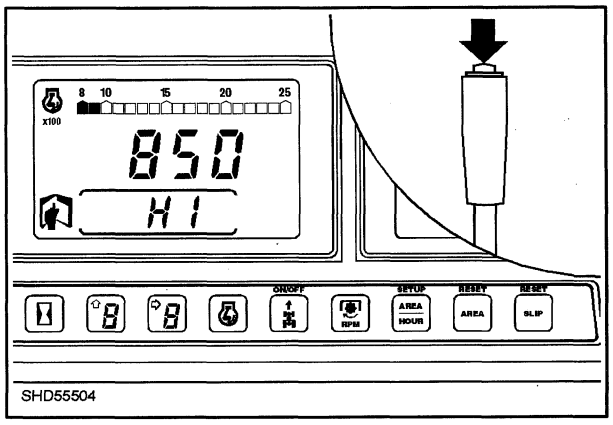

4

The word CAL should appear on the instrument cluster display. This will be replaced after a few seconds by the oil temperature, in degrees Celsius.

Set the engine speed to 1200 +/- 100 rpm.

NOTE: *The engine RPM must be stable with no noticeable surging. If necessary, adjust the throttle position to achieve this, still remaining within the 1200 +/- 100 rpm range.*

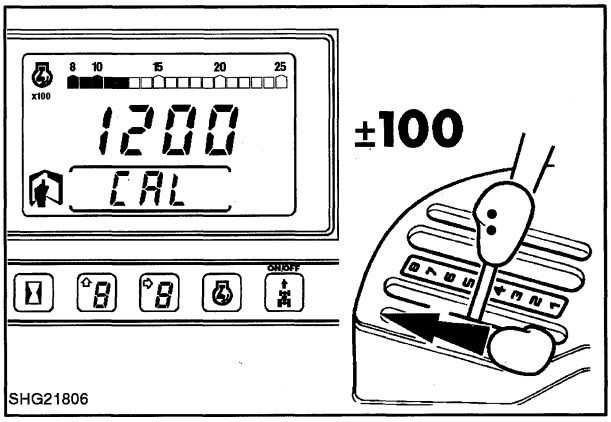

5

C3 and C4 Calibration

Place the two gear levers in the forward position.

NOTE: *No need to use the clutch pedal.*

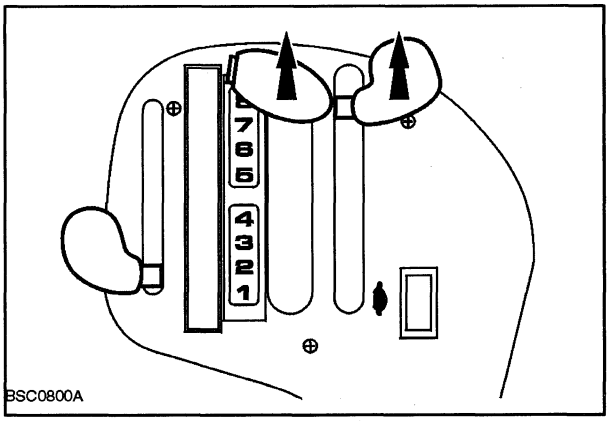

6

Move the shuttle lever into the forward drive position.

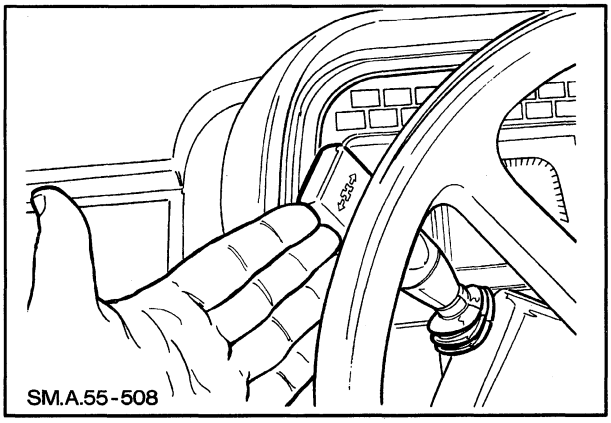

7

IMPORTANT: *The shuttle synchroniser* ***must*** *be calibrated before further calibration of the transmission is attempted. Failure to observe this procedure will result in error code U36 showing in the gearshift display.*

Press and hold the upshift and downshift switches, the display will show 'Soc'. Continue to hold the upshift and downshift buttons.

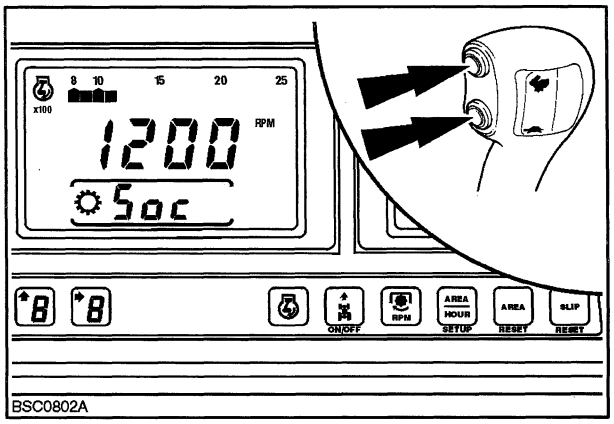

8

The gearshift display will now sequence through figures '1', '2', '3' and '4'. When the display reads 'End', calibration of the transmission synchronisers has been completed, release the upshift and downshift buttons.

The display then returns to CAL then temperature display.

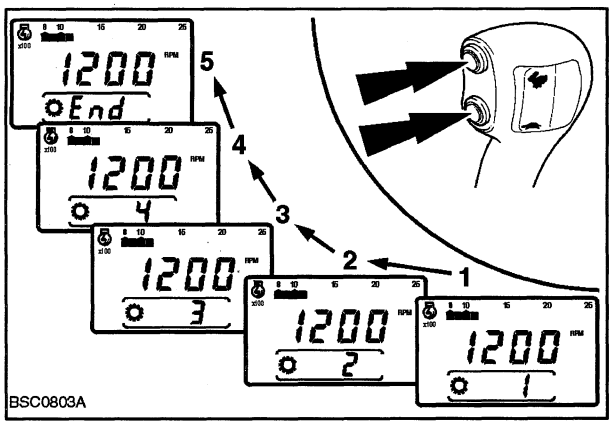

9

C3 calibration :

Press and hold the Upshift button.
If the start up procedure was incorrect, a U code will be displayed (see page 6).

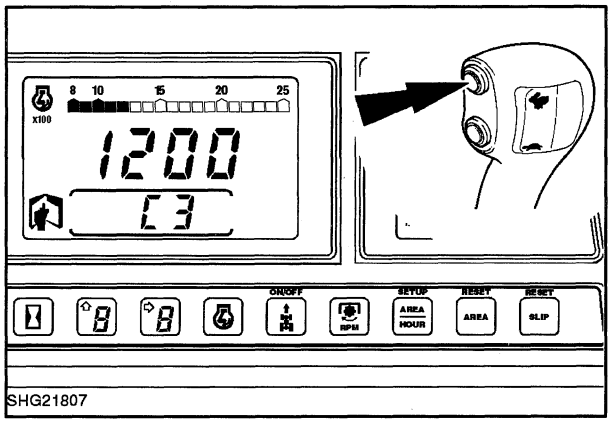

10

The display will change to show a number.
This number will flash and begin to scroll up, as the clutch is calibrated.
When the processor detects a decrease in engine rpm of 30, the calibration stops. This is indicated by a fixed, non flashing number.
Release the Upshift button.

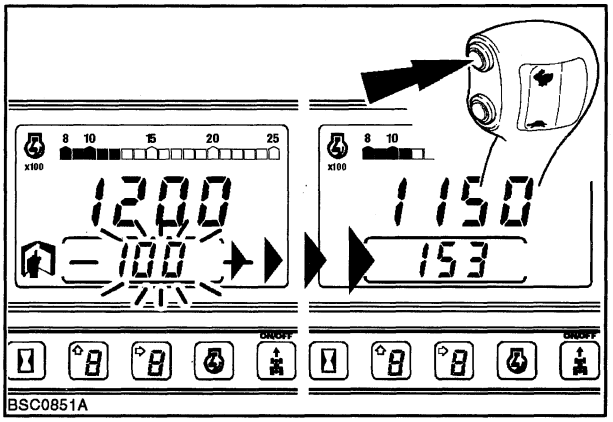

11

C4 calibration :

Use the downshift button to calibrate the C4 clutch in the same manor as the C3 clutch.

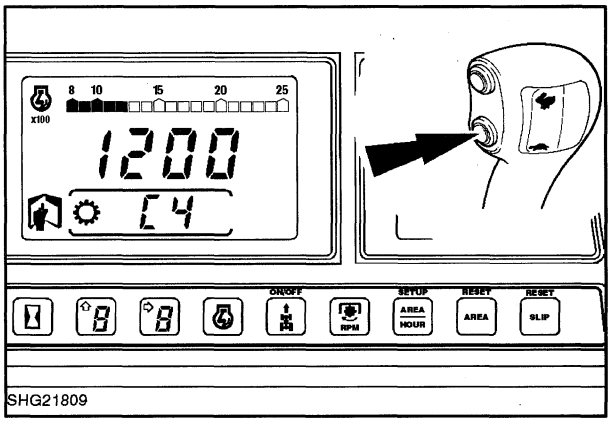

12

The display is similar to the C3 calibration.

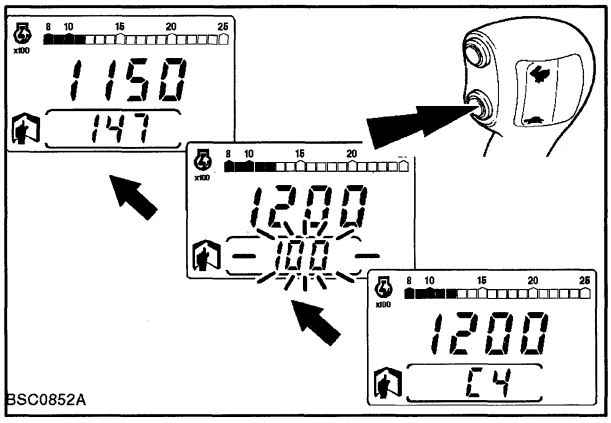

13

C1 and C2 calibration :

Place the range lever in neutral, leaving the main lever in the forward position. Leave the shuttle lever in the forward drive position.

Set the engine speed to 1200 +/- 100 rpm.

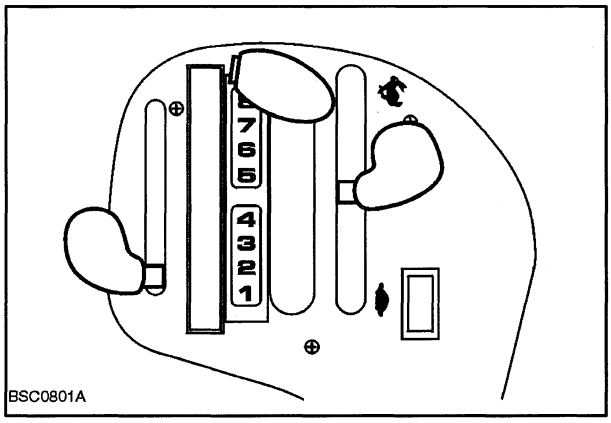

14

Press and hold the Upshift button to calibrate the C1 clutch.
Press and hold the Downshift button to calibrate the C2 clutch.
The procedure is the same as that for the C3 and C4 clutches.

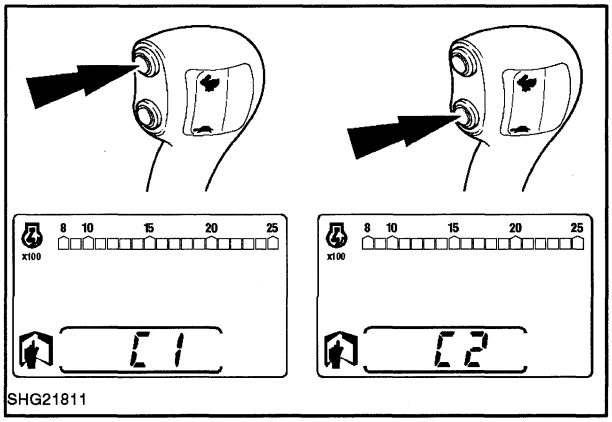

15

Clutch Spring Pressure Calibration Error Codes

U20	Handbrake not applied	
U21	Engine rev/min is too low (1200 rpm ± 100 rpm)	
U22	Engine rev/min is too high (1200 rpm ± 100 rpm)	
U23	Forward/Reverse shuttle lever is not in forward.	
U24	Main lever is not in 5-8 range.	
U25	Range lever in low range	
U26	Clutch pedal is not fully released.	
U27	C3 calibration is too low -	The initial test pressure was sufficient to lug the engine.
U28	C3 calibration is too high -	The maximum test pressure was reached without causing the engine speed to decrease 50 rpm.
U29	C4 calibration is too low -	The initial test pressure was sufficient to lug the engine.
U30	C4 calibration is too high -	The maximum test pressure was reached without causing the engine speed to decrease 50 rpm.
U31	Wheel motion detected during calibration -	Handbrake was not fully applied or the calibration threshold was too low such that initial test pressure was enough to cause slight wheel motion prior to lugging the engine.
U32	C1 calibration is too low -	The initial test pressure was sufficient to lug the engine.
U33	C1 calibration is too high -	The maximum test pressure was reached without causing the engine speed to decrease 50 rpm.
U34	C2 calibration is too low -	The initial test pressure was sufficient to lug the engine.
U35	C2 calibration is too high -	The maximum test pressure was reached without causing the engine speed to decrease 50 rpm.
U36	Synchroniser not calibrated	Must calibrate synchroniser first
U37	Synchroniser reverse position outside limits	
U38	Synchroniser forward position outside limits	
U39	Reverse synchroniser, no movement at maximum pressure	Full hydraulic pressure reached with no synchroniser movement detected
U40	Forward synchroniser, no movement at maximum pressure	Full hydraulic pressure reached with no synchroniser movement detected

H2 MENU MODE -
Display of Clutch/synchroniser calibration values and C3/C4 manual adjustment

NOTE: *The tractor is driveable in this mode.*

Install the diagnostic switch, Tool No. 4FT 950, and start the engine.

Select mode H2 using the diagnostic switch.

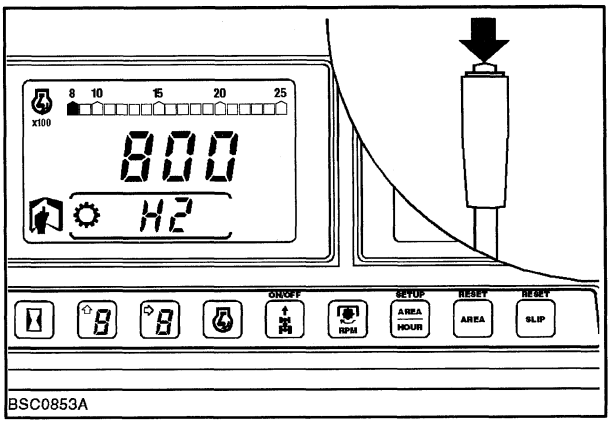

16

The calibration values are displayed in the following sequence:

	Range of Values
Clutch 1	101-240
Clutch 2	101-240
Clutch 3	101-240
Clutch 4	101-240
Synchro position signal reverse	655-963
Synchro position signal forward	61-376

Display then returns to Oil temperature.

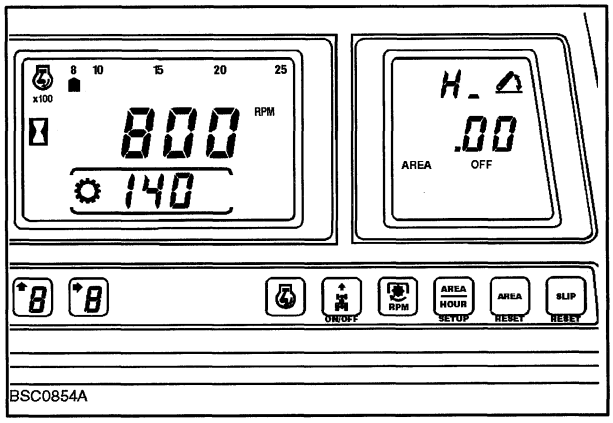

17

After the values have been displayed it is possible to adjust the C3 and C4 clutches.

The transmission oil temperature should be at least 40°C.

Depress the clutch, select either gear 7L (C4 is used) or 8L (C3 is used), with the shuttle lever in forward, release the clutch and perform shuttle shifts driving the tractor at between 1500-1800 rpm.

NOTE: *The tractor can be driven in all gears but Powershifts are not possible. The tests are performed in the low range because this is more sensitive to calibration changes.*

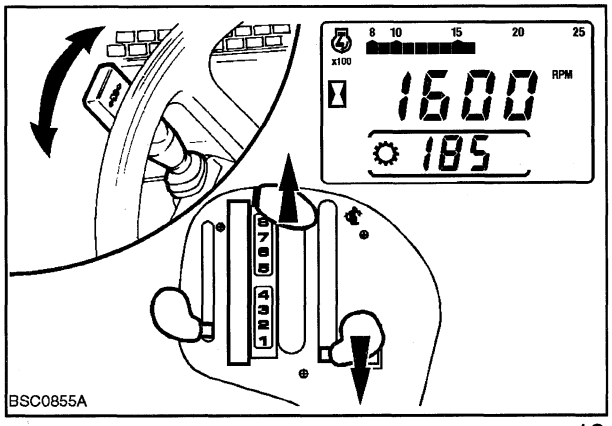

18

If the shuttle shifts require fine tuning:-

While driving the tractor, with the clutch pedal fully released, the clutch value is displayed and may be adjusted using the up and down powershift switches. Make only small adjustments and shuttle to test the performance.

⚠ WARNING ⚠

Take care to remain observant to the ouside surroundings during these adjustments.

NOTE: *If the shuttle lever is moved to neutral the display will show either C3 or C4 depending on the gear selected.*

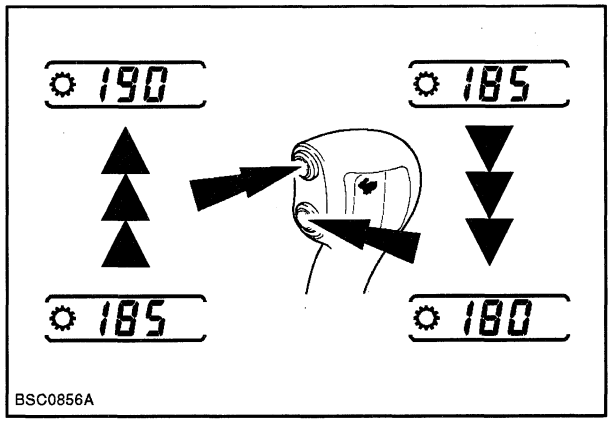

19

H3 See Electronic Draft Control 'H' Menus

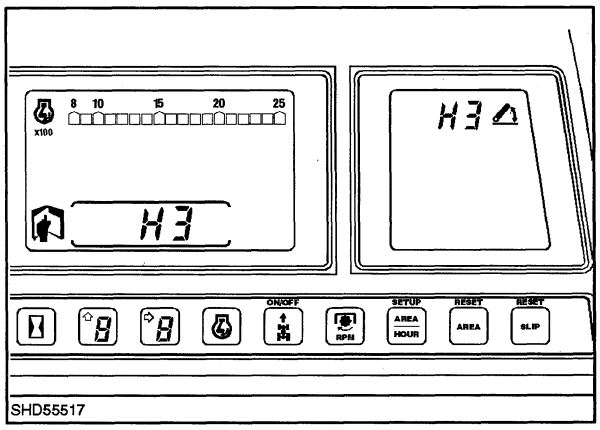

20

H4 MENU MODE -
Software Revision Level

Select H4 with the test switch.

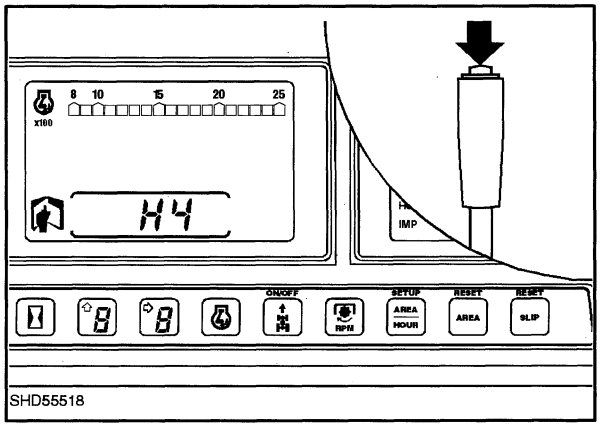

21

The display will automatically show software information:

CC	16x16 Power Shuttle transmission
03	Software level

and then return to "HH" screen.

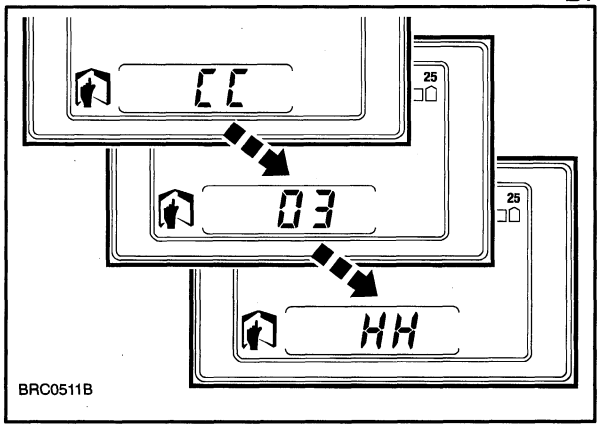

22

H5 MENU MODE -
Transmission/EDC Switch Test

Select H5 with the test switch.

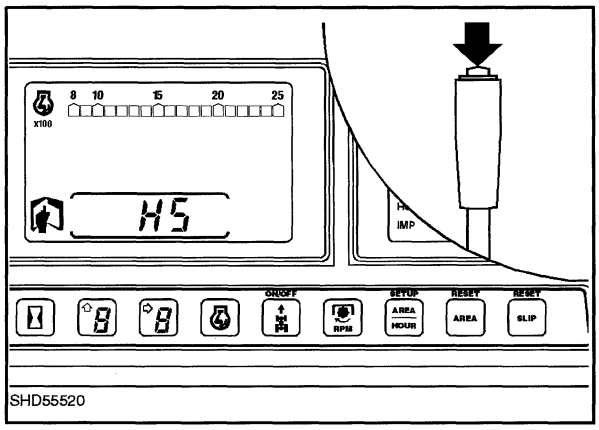

23

The display will then show "d0".

If a transmission or EDC switch is operated the display will show a code number and an audible tone will be heard to indicate correct operation.

If the code and tone do not operate, the switch or wiring could be at fault.

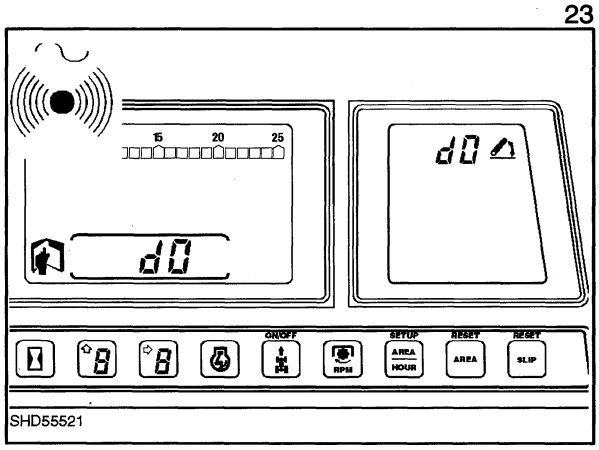

24

16x16 Switch Diagnostics

Code	Switch Operated
d22	Forward Switch
d23	Reverse Switch
d71	Clutch Pedal Switch
d72	Seat Switch
d73	Handbrake Switch
d74	Downshift Switch
d75	Upshift Switch
d77	5-8 Range Switch
d81	1-4 Range Switch
d82	Low Range Switch
d83	High Range Switch
d85	Neutral Switch (FNR Switch)
d92	40°C Oil Temperature Switch
d93	Fuse No. 12 Sense
d94	Manual differential lock switch position
d95	Left Foot brake switch
d96	Right Foot brake switch
d99	Auto differential lock switch

Notes:

d71 Select Forward or Reverse then operate clutch.

d85 Clutch pedal needs to be depressed and the shuttle lever cycled.

d92 Remove switch connector and bridge to cause transition

d93 Cause a transition by removing and replacing the fuse.

H6 MENU MODE -
Select rear tyre rolling radius

Using a diagnostic lead, select H6 in the diagnostic menu.

The current radius will be displayed (in millimetres). On a new vehicle this will be the basic build tyre radius and will not need changing unless different size tyres are fitted.

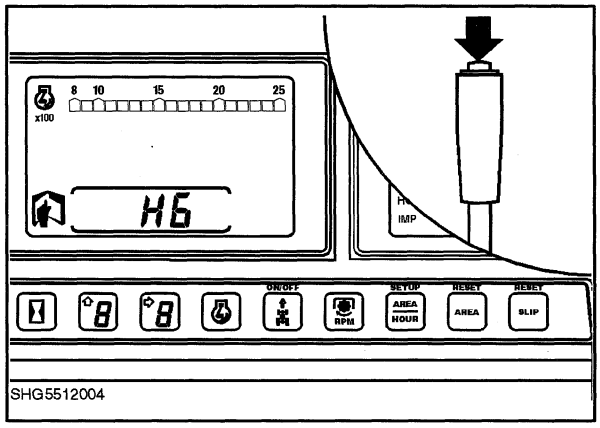

25

By pressing the Transmission Upshift button a larger radius may be selected and Downshift button selects a smaller radius. Use the buttons to select the value closest to the actual radius.

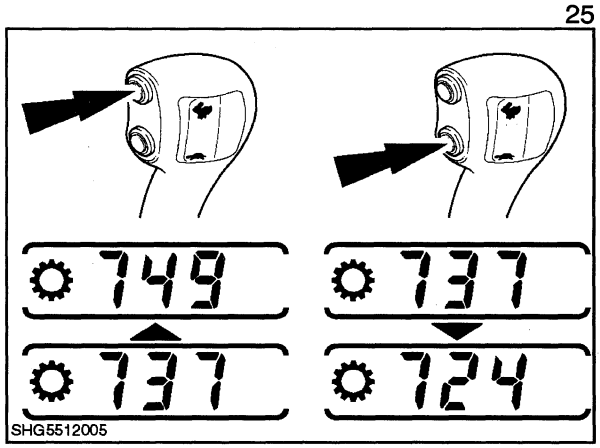

26

TYRE RADIUS INDEX FOR ROAD SPEED CALCULATION

Tyre Size Designation				Radius Index
8.3	-	24		470
	-	32		570
	-	36		620
	-	38		645
	-	44		720
9.5	-	20		445
	-	24		495
	-	28		545
	-	36		645
	-	38		670
	-	44		745
	-	48		795
11.2	-	20		465
	-	24		515
	-	28		565
	-	36		665
	-	38		690
12.4	-	20		490
	-	24		540
	-	28		590
	-	32		640
	-	36		690
	-	38		720
	-	46		820
13.6	-	24		560
	-	26		585
	-	28		610
	-	36		715
	-	38		740
14.9	-	24		590
	-	24	IND	580
	-	26		615
	-	28		640
	-	28	IND	630
	-	30		665
	-	38		765
15.5	-	38		745
16.9	-	24		620
	-	24	IND	610
	-	26		645
	-	28		670
	-	28	IND	660
	-	30		695
	-	34		745
	-	34	IND	730
	-	38		795
	-	42		845
17.5L	-	24	IND	580
18.4	-	24	IND	635
	-	26		670
	-	26	IND	665

Tyre Size Designation				Radius Index
18.4	-	28	IND	685
	-	30		720
	-	30	IND	715
	-	34		770
	-	38		820
	-	42		870
19.5L	-	24	IND	610
20.8	-	34		805
	-	38		855
	-	42		905
21L	-	24	IND	635
	-	30		720
23.1	-	26		760
	-	26	IND	750
	-	30		810
	-	34		860
24.5	-	32		855
28L	-	26		720
	30.5L		R32	860
	1050 / 50		R32	855
	800 / 60		R32	820
	440 / 65		R24	560
			R28	610
	480 / 65		R24	590
			R28	640
	540 / 65		R24	620
			R26	645
			R28	670
			R30	695
			R34	745
			R38	795
	600 / 65		R28	695
			R32	745
			R34	770
			R38	820
	650 / 65		R38	855
			R42	905
	750 / 65		R26	770
	800 / 65		R32	870
	260 / 70		R16	360
			R18	390
			R20	415
	280 / 70		R16	375
			R18	400
	300 / 70		R16	375
			R18	405
			R20	445
	320 / 70		R20	465
			R24	515
			R28	565
	360 / 70		R20	490

Tyre Size Designation			Radius Index
360 / 70	R24		540
	R28		590
380 / 70	R20		510
	R24		560
	R28		610
400 / 70	R20		520
	R24		560
420 / 70	R24		590
	R28		640
	R30		665
460 / 70	R24		590
480 / 70	R24		620
	R26		645
	R28		670
	R30		695
	R34		745
	R38		795
500 / 70	R34		745
520 / 70	R26		650
	R30		720
	R34		770
	R38		820
540 / 70	R34		770
580 / 70	R26		670
	R38		855
	R42		905
600 / 70	R30		745
620 / 70	R26		720
	R38		855
	R42		905
650 / 70	R26		745
	R30		795
680 / 70	R32		820
	R34		855
710 / 70	R38		905
340 / 75	R20		480
380 / 75	R20		500
620 / 75	R26		760
	R30		810
	R34		860
650 / 75	R32		835
	R34		855
680 / 75	R32		870
710 / 75	R34		905
210 / 80	R16		345
250 / 80	R16		385
	R18		410
260 / 80	R20		445
320 / 80	R18	IND	475

Find the rolling radius of the rear tyres of the vehicle using the table provided on the previous page or if the tractor is fully built and tyres at the correct pressure the radius can be measured (in millimetres) from centre of rear axle to ground.

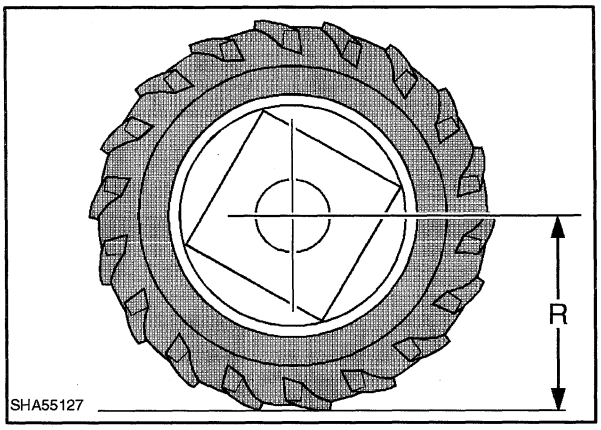

27

On AEIC panels only the Upshift and Downshift buttons pressed together will toggle the groundspeed display between Kph and Mph units. The default setting is Mph.

Once you have the radius and display units selected, key off and disconnect the diagnostic lead. This will store the details in Non-Volatile Memory (i.e. values will not be lost if battery is disconnected).

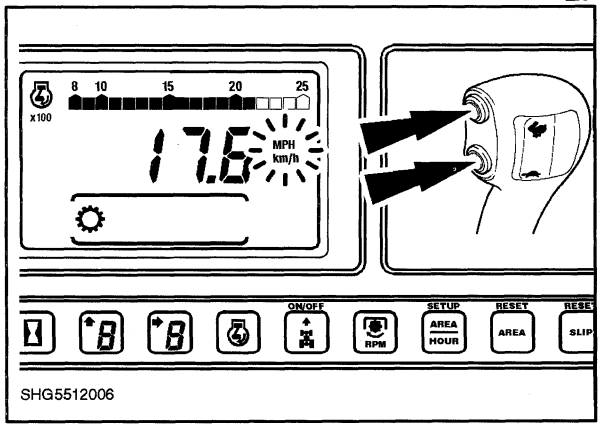

28

H7 MENU MODE -
Auto Radius Calibration

(400 foot / 122m dash)

Mark out a 400 foot / 122 metre distance on level ground.

Install the Test Switch and start the engine.

Select H7 with the test switch.

NOTE: *This mode can also be entered by starting the engine with either the upshift or downshift button depressed.*

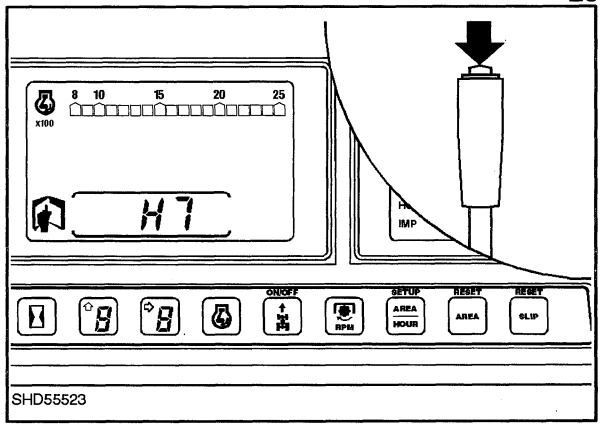

29

The display will change to show the current radius (in millimetres). On a new vehicle this will be the basic build tyre radius and will not need changing unless different size tyres are fitted.

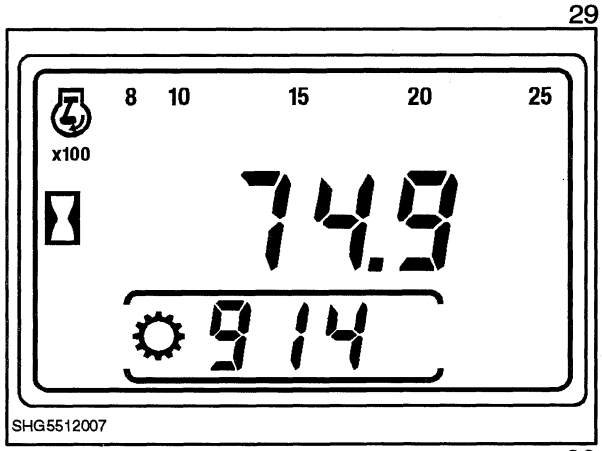

30

With the transmission in high range (hare) and gear lever in 1-4 group.

Drive the tractor towards Start Line, as the front wheels cross the line press the Upshift button. The display will now show "Run". Continue to the End line and as the front wheels cross, press the Downshift button.

The radius of the rear wheels will now be displayed.

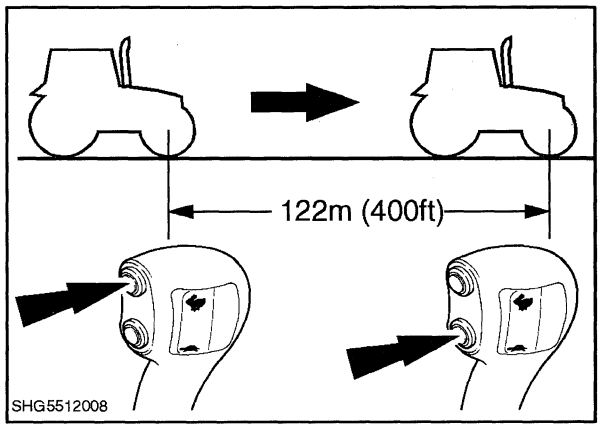

31

On AEIC panels only further presses of the Downshift button will toggle the groundspeed display between Kph and Mph units. The default setting is Mph.

Once you have the radius and display units selected, key off to store the settings.

H8 MENU MODE -
Non Volatile Memory Reset

Select H8 with the test switch.

WARNING!
H8 WILL CLEAR ALL CALIBRATION VALUES AND STORED ERROR CODES

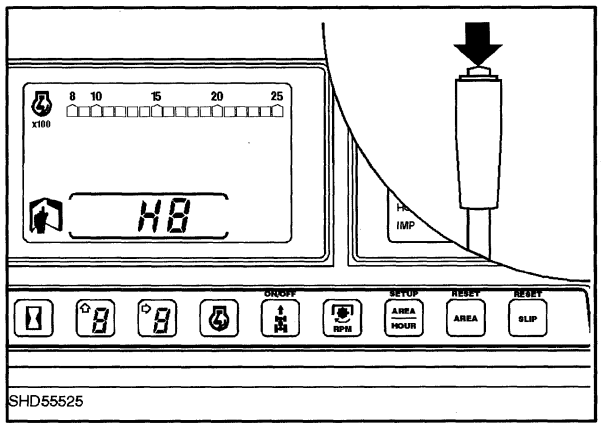

32

After selecting H8 the display will change to "EE" (Erase EPROM) automatically.

The display will then return to the "HH" screen.

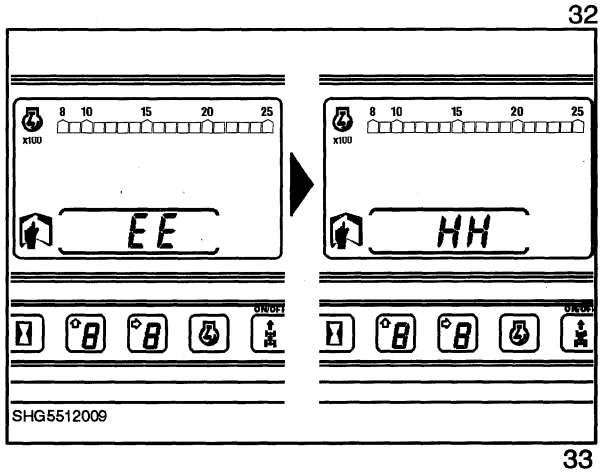

33

H9 Vehicle Sensor Operation Display

Select H9 with the test switch.

H9 allows various signals to and from solenoids, potentiometers etc. to be checked for both transmission and EDC systems.

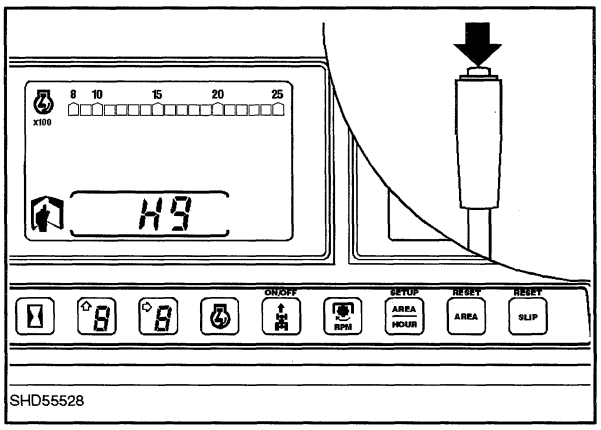

34

The required channel can be selected by using the up/downshift switches.

NOTE: 4 seconds after selecting a channel, the channel number will be replaced by a value for that channel.

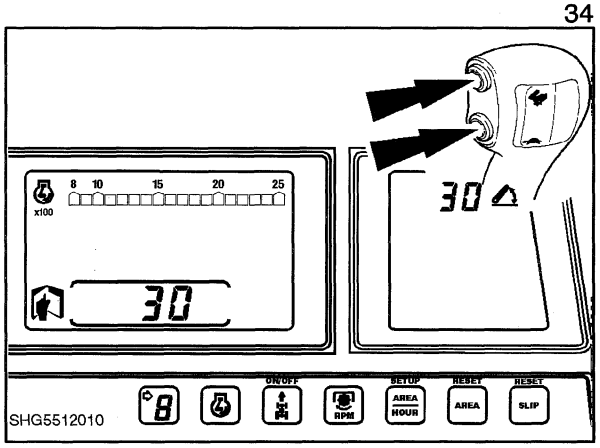

35

Channel Number	Description	Typical Approximate Values
0	Clutch Pedal position	91 Released, 26 Depressed
1	Transmission Oil Temperature	71@0°C, 46@30°C, 26@60°C, 14@90°C
2	Not Used	-
3	Fuse 12 Sense	99, (zero if blown)
4	Not used	-
5	5 Volt Reference (sensor supply)	50
6	12 Volt Vf Input (Fuse 13)	48
7	12 Volt Vd Input (Clutch Switch)	47 Clutch pedal up and FNR in F or R 0 clutch pedal down or FNR in Neutral
8	12 Volt Vh Input (Fuse 14)	48
9	8 Volt Reference (EDC Control)	80
10	Not applicable to service	-
11	Not applicable to service	-
12	Not applicable to service	-
13	Not applicable to service	-
14	C1 Valve Current Sense	85+ Engaged, 0 Not Engaged
15	C2 Valve Current Sense	85+ Engaged, 0 Not Engaged
16	C3 Valve Current Sense	85+ Engaged, 0 Not Engaged
17	C4 Valve Current Sense	85+ Engaged, 0 Not Engaged

Channel Number	Description	Typical Approximate Values
18	EDC Valve Raise Solenoid Current	0-73
19	EDC Valve Lower Solenoid Current	0-73
20	Ground Speed Signal	60 when tractor stopped
21	Not used	-
22	Not applicable to service	
23	Not applicable to service	
24	Forward synchroniser solenoid current	0 except when shifting (45 approx. when shifting)
25	Reverse synchroniser solenoid curent	0 except when shifting (45 approx. when shifting)
26	Not used	
27	Synchroniser Potentiometer	20 in forward, 80 in reverse
28	Lift Arm Position Sensing Potentiometer	33 Lift Lowered 83 Lift Raised
29	Lift Control Lever Potentiometer	27 Fully Lowered 83 Fully Raised
30	Drop Rate Control Potentiometer	84 Turned Fully Clockwise 14 Turned Fully Counter Clockwise
31	Height Limit Control Potentiometer	84 Turned Fully Clockwise 14 Turned Fully Counter Clockwise
32	Position/Draft Sensitivity Potentiometer	84 Turned Fully Clockwise 14 Turned Fully Counter Clockwise
33	Slip Limit Control Potentiometer	84 Turned Fully Clockwise 14 Turned Fully Counter Clockwise
34	Right Hand Load Sensing Pin	48 When Implement not being used
35	Left Hand Load Sensing Pin	48 When Implement not being used
36	Left Brake Pedal Switch	0 with brakes on, 99 with brakes off
37	Right Brake Pedal Switch	0 with brakes on, 99 with brakes off
38	Not used	
39	Forward Switch (shuttle lever)	30 in neutral, 67 in forward
40	Reverse Switch (shuttle lever)	30in neutral, 67 in reverse
41	not used	
42	not used	
43	Wheel Speed Frequency	99 = approximately 50Kph 50 = approximately 25 Kph
44	Not used	
45	Engine rev/min. Alternator Signal	99 = approximately 3000 rev/min. 50 = approximately 1500 rev/min.
46	RADAR Speed	99 = approximately 50Kph 50 = approximately 25 Kph

NOTE: To observe the values for channels 14, 15, 16 17 and 24 and 25 the engine needs to be running and the appropriate gear selected. For channels 14 and 16 select 1-4 range, for channels 15 and 17 select 5-8 range).

The values quoted are approximate typical values and these may vary slightly from tractor to tractor. Allow up to 10% on the figures quoted.

Explanations:

Vf Input: This is the input voltage into the microprocessor to transmission components not directly affected by the clutch pedal switch, i.e. PWM solenoids C1 and C2 and the Creeper solenoid.

Vd Input: This is the input voltage into the microprocessor to transmission components which are affected by the clutch pedal switch, i.e. PWM solenoids C3 and C4.

Vh Input: This is the input voltage into the microprocessor for EDC components, i.e. Raise and Lower solenoids.

HA MENU MODE -
Clutch Pedal Position Display and Oil Temperature

Select HA with the test switch.

This selection allows the tractor to be driven while displaying the clutch pedal position.

The value is displayed as a percentage, 99 clutch released and 0 clutch fully depressed.

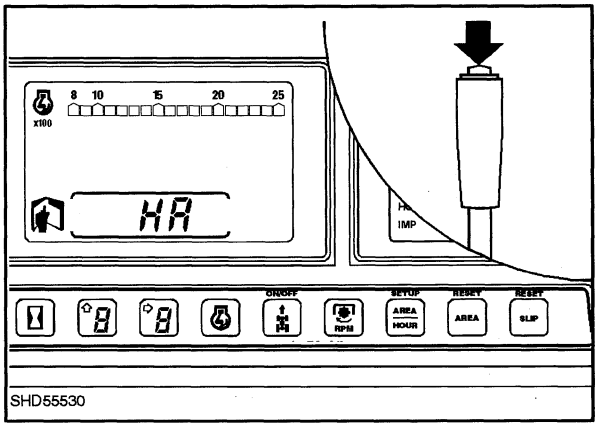

36

The position of the clutch pedal can then be monitored.

Use this mode to correctly set up the clutch pedal switch. The switch should operate between 8 (down click) and 14 (upwards click).

When the clutch switch is closed, 'C' is displayed and when the clutch switch is open 'O' is displayed on the left hand display digit, when forward or reverse is selected.

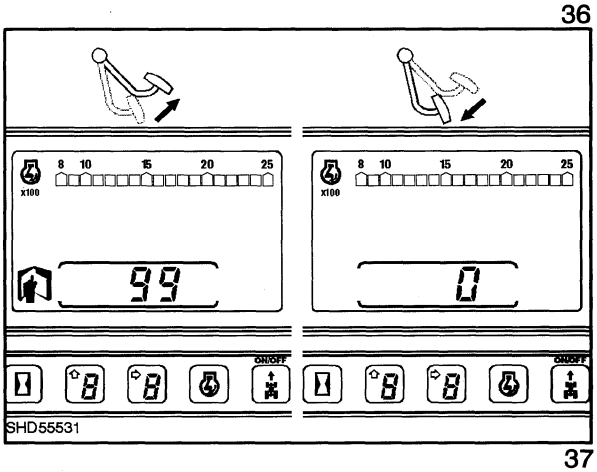

37

The OIl temperature is displayed when the clutch pedal is released for more than 5 seconds.

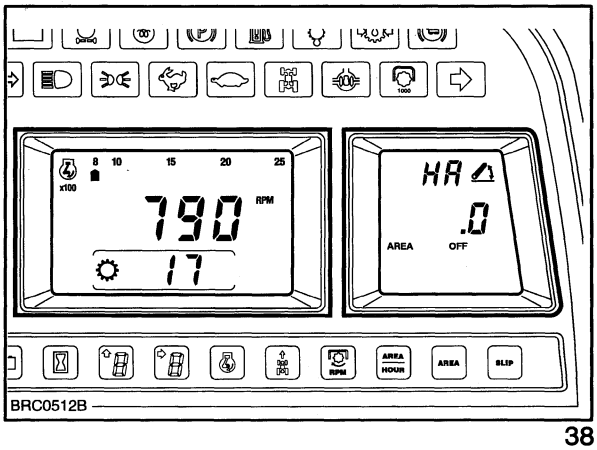

38

HB View Stored Error Codes

Select HB with the test switch.

This mode displays the error codes stored in the memory of the transmission processor.

Up to 10 transmission error codes and 10 EDC error codes can be stored. The display mode sorts the error codes so that the error codes which occurred most recently are displayed first.

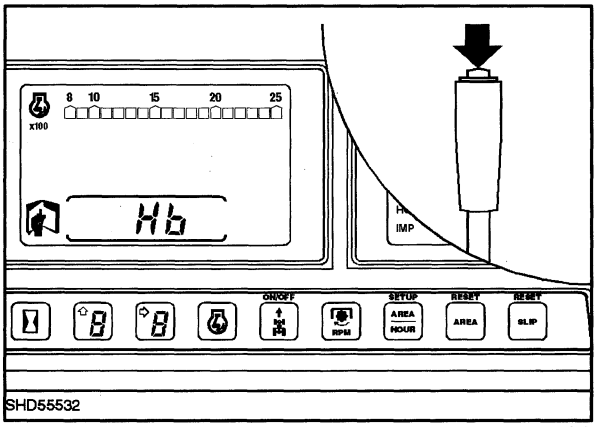

39

Whilst in this mode the transmission upshift and downshift switches and the EDC raise/lower switch is used to control the display.

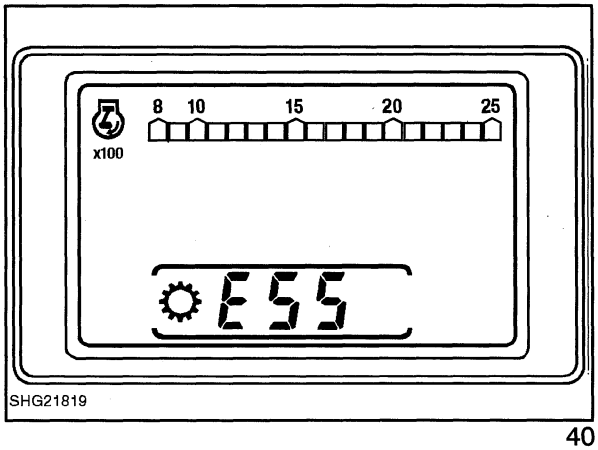

40

EDC error codes are displayed first, if there are any. The transmission LCD is blank.

Momentarily press the EDC raise/lower switch to view the next EDC error code.

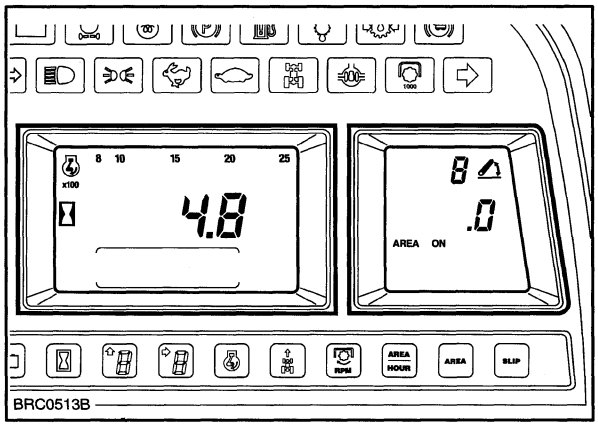

41

To view transmission errors, momentarily push the up or down shift buttons. The EDC display will go blank.

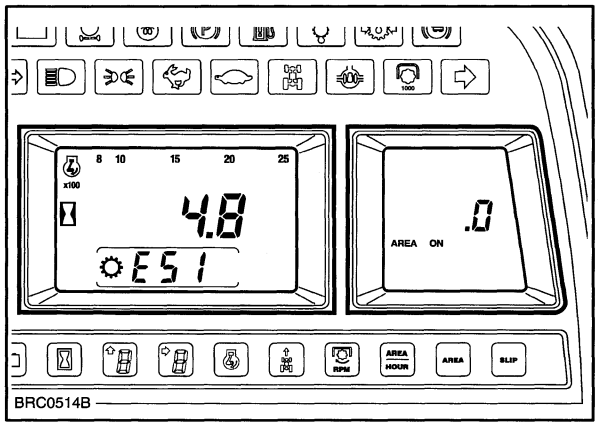

42

To select the next stored error code, press either the up or down shift switch.

To return to EDC error codes, momentarily depress the raise/lower switch.

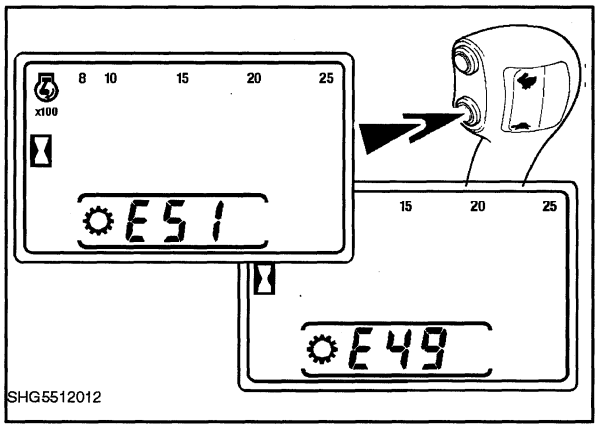

43

Transmission - hours / occurences

To view the hours since the error last occurred, press and hold the upshift switch. The hours will be displayed for up to two seconds.

NOTE: *Hours are counted whenever the engine is running.*

To view the number of times the error has occurred (i.e. how many times the fault has been detected, ongoing errors will be stored everytime the keyswitch is turned on), continue to hold the upshift switch after the hours have been displayed.

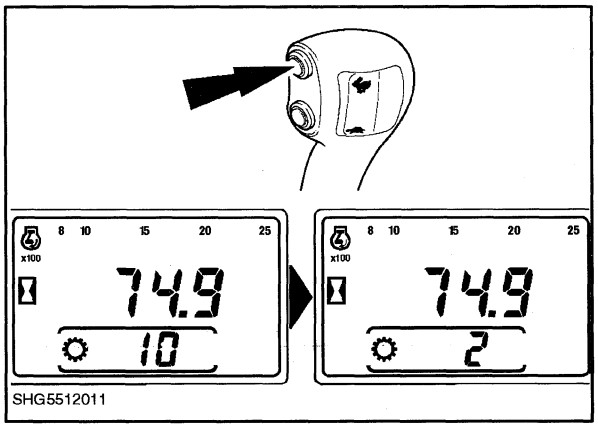

SHG5512011

44

To return to the top of the list, at any time, press both the upshift and downshift buttons together.

When there are no errors to display or the end of the last has been reached, the display will show " _ _ ".

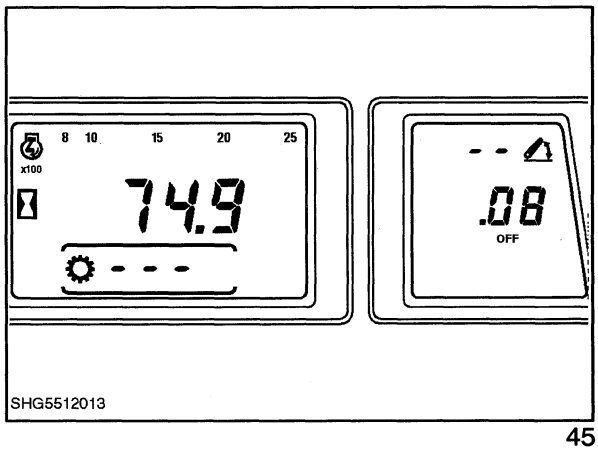

SHG5512013

45

EDC - hours / occurences

To view the hours since the error last occurred, press and hold the raise/lower switch in the lowering position.

Due to the EDC display only capable of displaying 2 digits, the display will show the hours in 2 stages and the occurences in 2 stages.

The display will show a digit for approximately 0.8 of a second followed by 2 more digits for a further 2 seconds, this is the hours since the error last occured.

NOTE: *Hours are counted whenever the engine is running.*

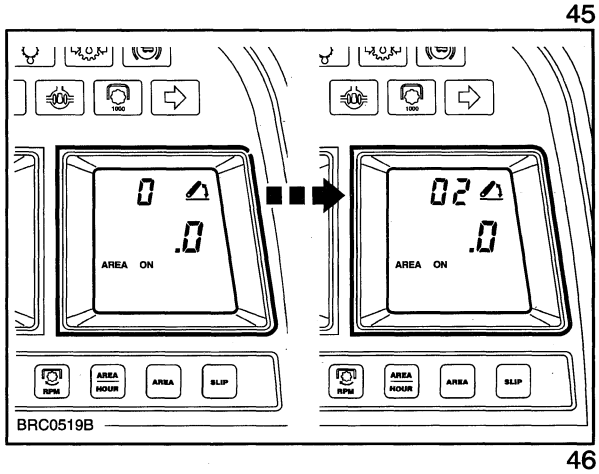

BRC0519B

46

Continuing to hold the lowering button will then show the number of occurences, again a digit is displayed for approximately 0.8 of a second followed by 2 more digits.

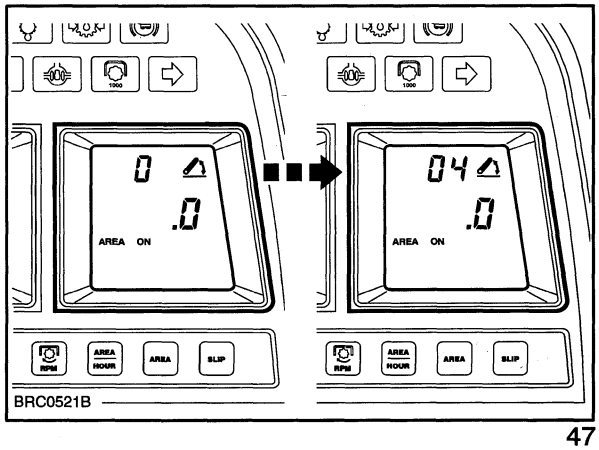

BRC0521B

47

HC MENU MODE -
Clear Stored Error Codes

This mode functions like 'H8' but only clears stored error codes. Calibration values are not affected.

Select HC with the test switch.

The dispaly will go blank, show 'EE' go blank again and then return to 'HH'.

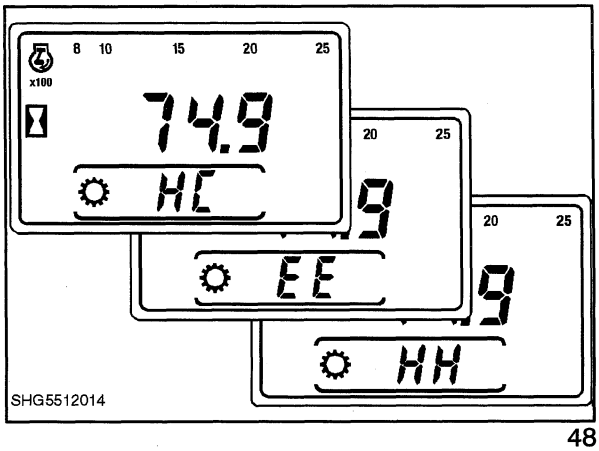

48

HD MENU MODE -
View Live Error Codes

Select HD with the test switch.

After a few seconds the display will revert to normal operating mode.

This mode allows normal tractor operation, but any detected errors will cause an error code to be displayed, whether they are disabling or not.

Key off, then on, to reset system to normal operation, i.e. only disabling error codes displaying.

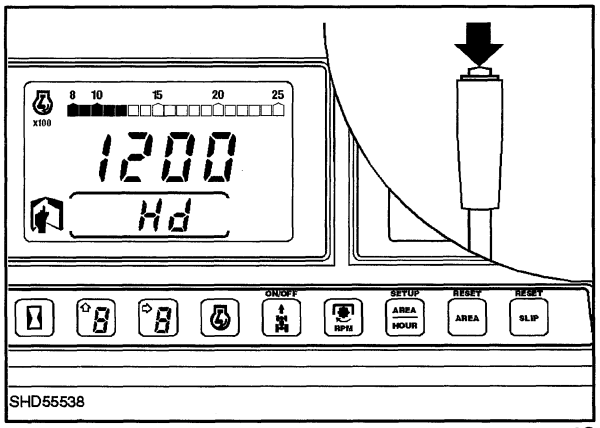

49

HE MENU MODE - CLUTCH FILL TIME CALIBRATION

Set up procedure:

- Warm the oil to normal operating temperature, at least 60°C.
- Park the tractor on a level surface.
- with a diagnostic tool installed, depress the clutch, start the engine and set engine speed to 1200 +/- 100 rpm.

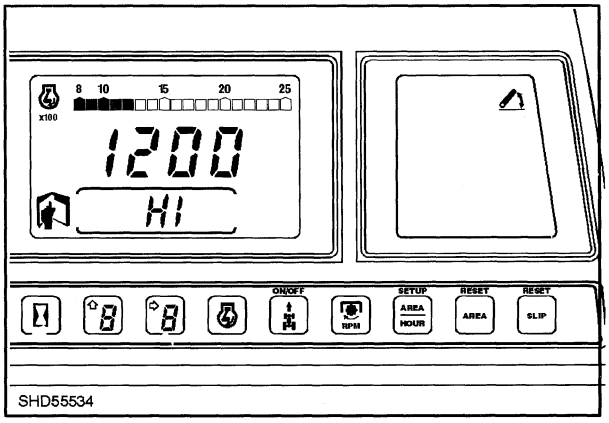

50

Entering the calibration mode :

Using diagnostic tool 4FT950 select mode **HE.**

Place the 4-5 (main) and range levers in neutral, place the shuttle lever in forward and release the clutch pedal.

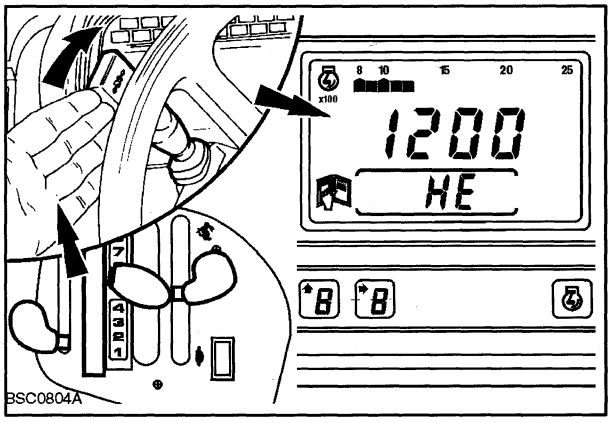

51

If the oil temperature is less than 60°C '**F1**' will be displayed, alternating with the display of oil temperature. This will NOT stop until the oil reaches 60°C.

CLUTCH SELECTION:
While the 4-5 lever is in neutral, the display will indicate which clutch is selected.

To select C1 or C2 the range lever must be in neutral.
To select C3 or C4 the range lever must be in the high range

To switch between C1 and C2 or C3 and C4, press the upshift or downshift switch while the 4-5 lever is in neutral.

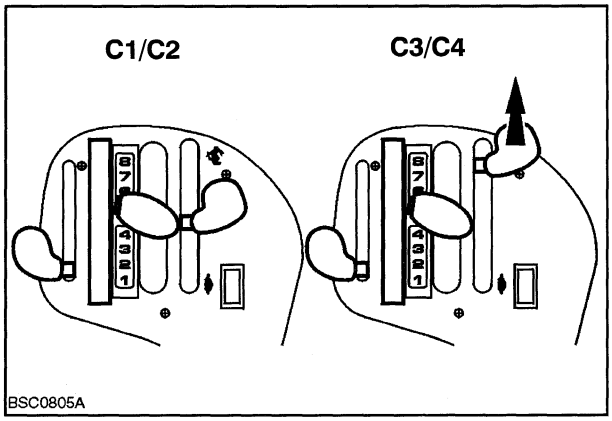

52

ADJUST AND TEST C1 OR C2
Shift the 4-5 lever into 5 (forward).
This display will show C1 or C2 and to the left of this a sequence of horizontal lines will appear to indicate a ramping up of pressure on the C3 and C4 clutches to prevent output rotation of the C1 and C2 clutches.

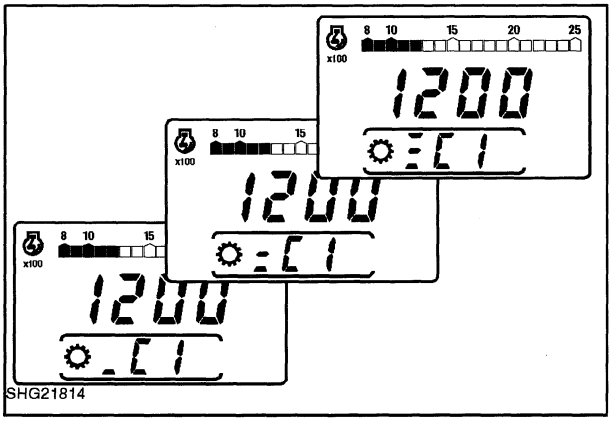

53

The display will then change to a single digit number which is indicating the quickfill time in 10 millisecond units.

This can be adjusted using the upshift and downshift switches.

The factory default setting is 3.

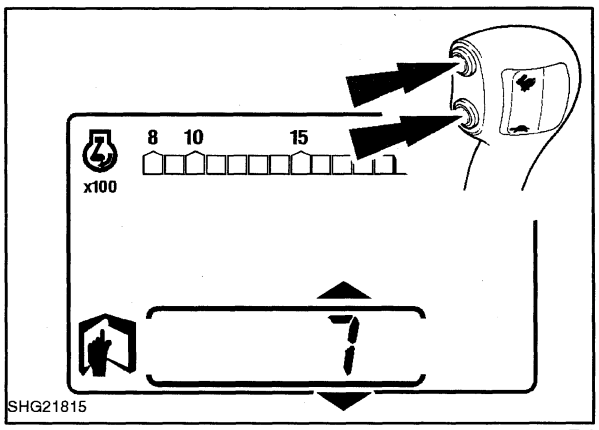

54

To test the quickfill setting, press and hold both the upshift and downshift buttons. The display will show 'FILL' The transmission will automatically engage and release appropriate clutches.

NOTE: *If nothing appears to happen depress the clutch, cycle the shuttle lever and release the clutch to re-enable the transmission.*

To adjust, reduce the value until no 'clunk' is evident, then increase the value until there is a distinct 'clunk' evident.

Then reduce the value by 2.

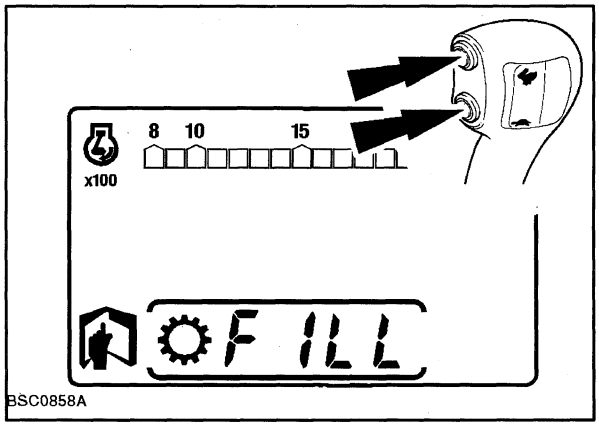

55

ADJUST AND TEST C3 OR C4

Ensure that the handbrake is OFF.

If coming from C1/C2 testing, shift both the 4-5 and range levers to neutral.

Shift the range lever into the high range.

Shift the 1-4/5-8 lever into 5-8 range.

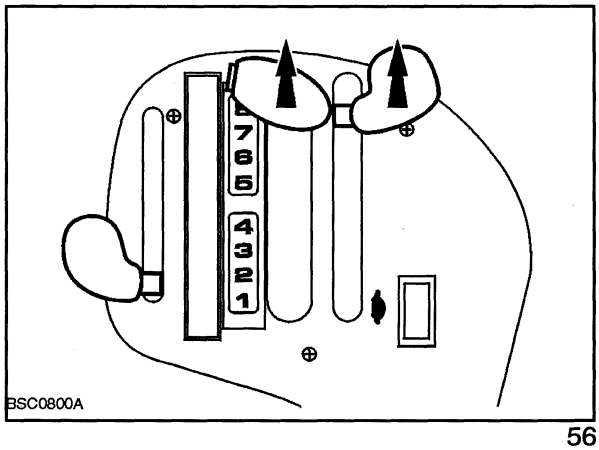

56

This display will show C3 or C4 and to the left of this a sequence of horizontal lines will appear to indicate a ramping up of pressure on C1 clutch to connect C3 and C4 to the engine.

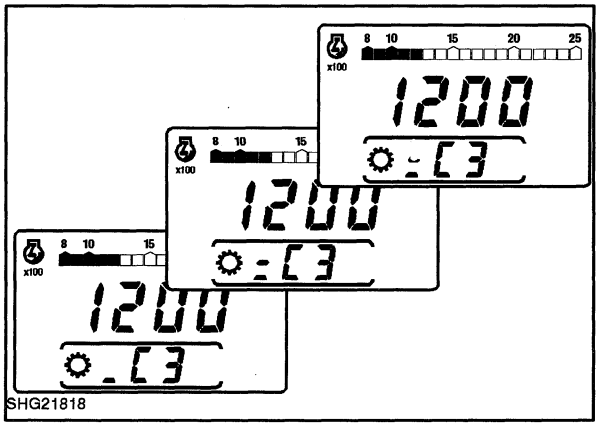

57

The display will then change to a single digit number which is indicating the quickfill time in 10 millisecond units.This can be adjusted using the upshift and downshift switches.

The factory default setting is 4.

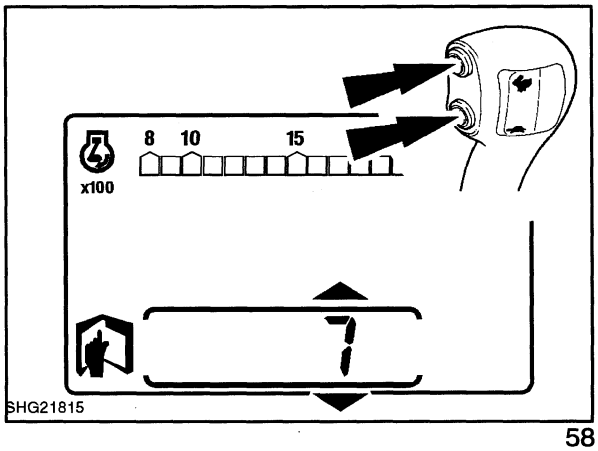

58

To test the quickfill setting, press and hold both the upshift and downshift buttons.

The display will show 'FILL' while C3 or C4 is engaged briefly. The display will then show the clutch selected followed by the quickfill value.

NOTE: *If nothing appears to happen depress the clutch, cycle the shuttle lever and release the clutch to re-enable the transmission.*

To adjust, decrease the value until the tractor does not move, then increase the quickfill just enough to cause the tractor to move.

Then reduce the value by 2.

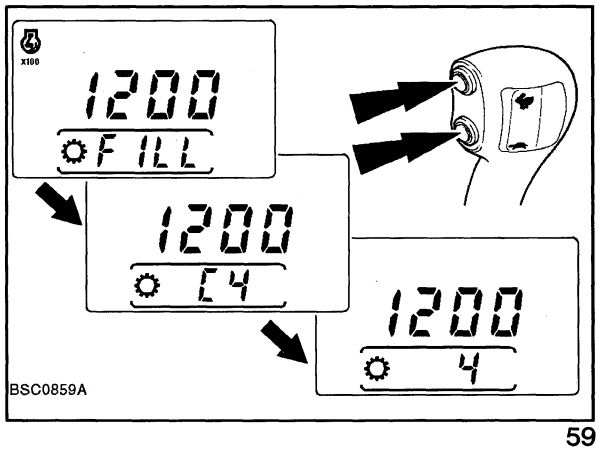

59

HF MENU MODE -
4WD Braking, engagement speed adjustment

Select HF with the test switch.

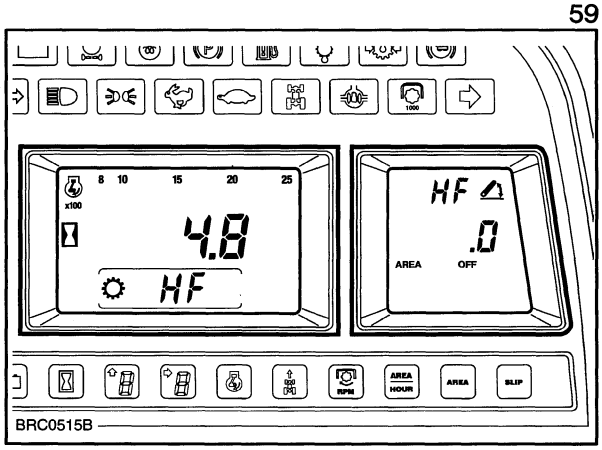

60

The display will change to show a value between 0 to 4.

The value corresponds to the approximate ground speed, in mph, below which the 4WD will not engage.

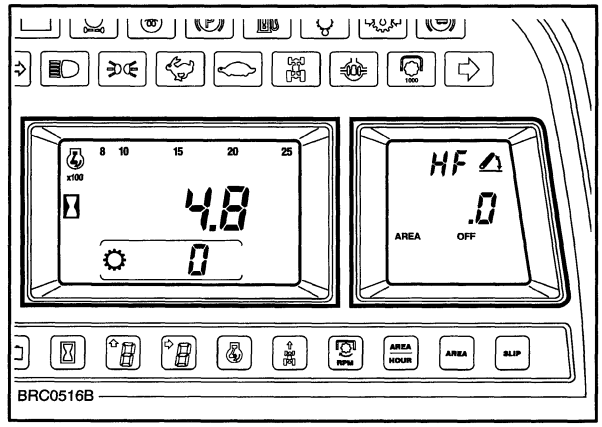

61

The value is adjusted by depressing the upshift to raise the value and the downshift to lower the value.

The factory default setting is 4.

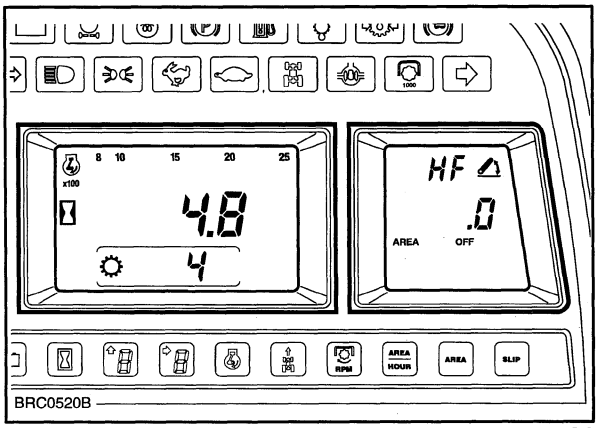

62

HJ MENU MODE -
Handbrake Loud Buzzer Control

This mode is used to switch ON/OFF the external loud buzzer.

Useful for where a DIC panel is installed which has its own internal buzzer.

Select HJ with the test switch.

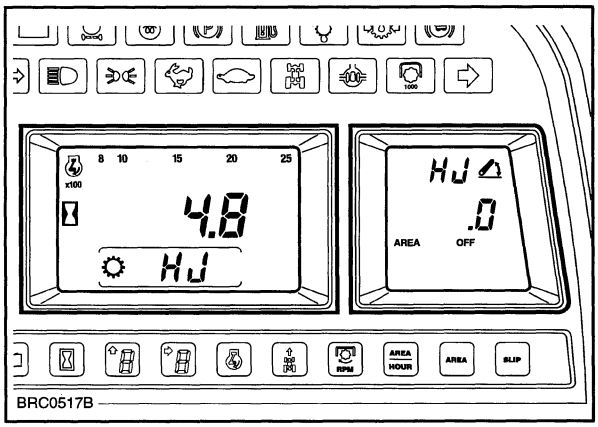

63

0 = Buzzer off

1 = Buzzer on

Use the up/downshift buttons to change the selection.

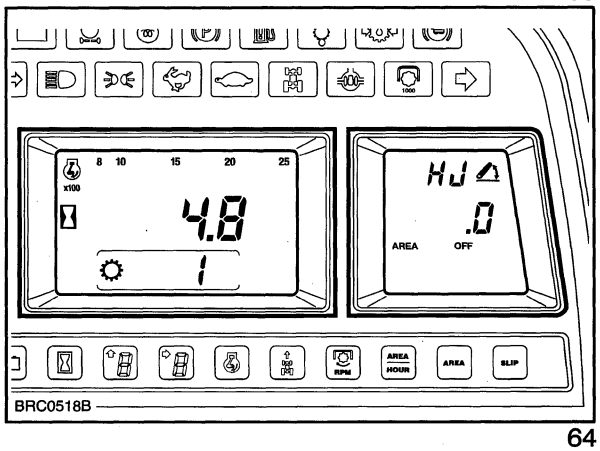

64

SECTION 4
HYDRAULIC SYSTEMS
CONTENTS

INTRODUCTION 4-2

HYDRAULIC CIRCUIT DESCRIPTION 4-5

8 X 2 ECONOSHIFT LOW PRESSURE HYDRAULIC OIL FLOW 4-14

12 X 12 SYNCHRO COMMAND LOW PRESSURE HYDRAULIC OIL FLOW ... 4-16

24 X 24 DUAL COMMAND LOW PRESSURE HYDRAULIC OIL FLOW 4-18

16 X 16 ELECTROSHIFT LOW PRESSURE HYDRAULIC OIL FLOW 4-20

HYDRAULIC PUMP ASSEMBLY WITH VARIABLE DISPLACEMENT CLOSED CENTRE LOAD SENSING (CCLS) 4-22

HYDRAULIC LIFT ASSEMBLY WITH ELECTROLINK™ FOR TRACTORS WITH VARIABLE DISPLACEMENT CLOSED CENTRE LOAD SENSING HYDRAULIC PUMP 4-81

HYDRAULIC LIFT ASSEMBLY WITH TOP LINK SENSING 4-163

FIXED DISPLACEMENT GEAR TYPE PUMPS 4-209

REMOTE CONTROL VALVES 4-247

ASSIST RAMS 4-281

HYDRAULIC LIFT ASSEMBLY WITH ELECTRONIC DRAFT CONTROL FOR TRACTORS WITH FIXED DISPLACEMENT HYDRAULIC PUMP 4-287

INDEX 4-378

INTRODUCTION

The function of the hydraulic system on TS Series tractors is to provide hydraulic oil flow at regulated pressure for the various hydraulic circuits within the tractor.

The major hydraulically operated or lubricated components fall into the following categories of tractor build:–

- Tractors installed with a 16 x 16 transmission, hydraulic lift assembly with Electrolink™ (electronic draft control) and hydraulic pump assembly incorporating a variable displacement closed centre load sensing (CCLS) piston pump and integral fixed displacement charge and steering pumps.

- Tractors installed with a 16 x 16 transmission, top link sensing hydraulic lift assembly and hydraulic pump assembly incorporating a variable displacement closed centre load sensing piston pump and integral fixed displacement charge and steering pumps.

- Tractors installed with a 12 × 12 transmission, hydraulic lift assembly with Electrolink™ and a fixed displacement tandem gear type pump incorporating a hydraulic lift pump and steering system/low pressure circuit pump.

- Tractors installed with a 12 x 12 transmission, top link sensing hydraulic system and hydraulic pump assembly incorporating a fixed displacement tandem gear type pump incorporating a hydraulic lift pump and steering system/low pressure circuit pump.

- Tractors installed with a 12 x 12, 8 x 2 or 16 x 4 transmission, with top link sensing hydraulic lift assembly and a fixed displacement tandem gear type pump incorporating a hydraulic lift pump and steering system/low pressure circuit pump.

Additional options such as trailer brakes, where fitted and remote control valves are available on all model builds. An optional engine mounted hydraulic pump is available on all tractors installed with the fixed displacement tandem gear type pump.

To assist in identifying the hydraulic system installed on the tractor refer to the following illustrations.

The hydraulic pump with closed centre load sensing (CCLS) variable displacement piston pump can be identified by the two vertical intake filters and horizontal charge pressure filter, Figure 1.

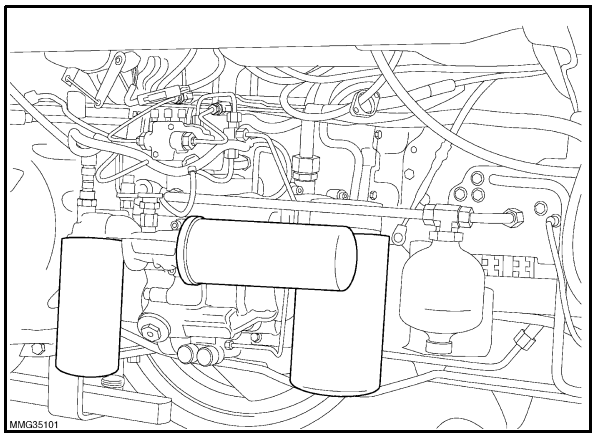

1

Tractors installed with electronic draft control (EDC) utilise a unique solenoid operated control valve situated on top of the hydraulic lift cover, Figure 2.

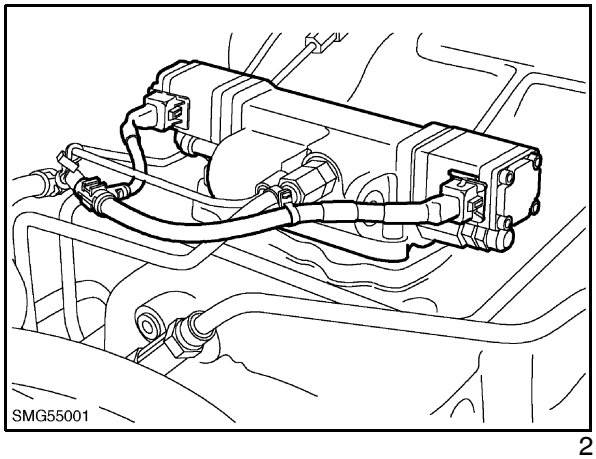

2

The EDC system can also be identified by the unique operators control panel, Figure 3.

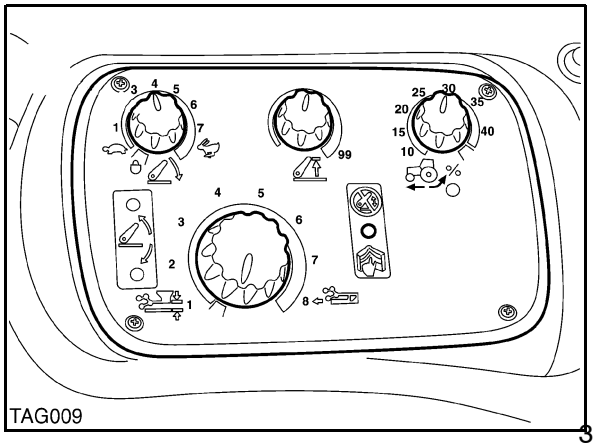

3

Tractors installed with the variable displacement hydraulic pump and top link sensing hydraulic system use an unload valve, installed on top of the hydraulic lift cover, Figure 4.

The unload valve used with top link sensing replaces the solenoid operated hydraulic control valve installed on tractors with electronic draft control.

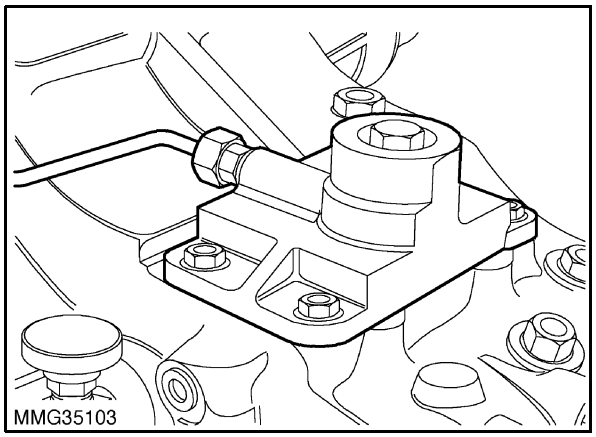

4

The Fixed displacement tandem gear type pump is located on the right hand side of the rear axle centre housing and incorporates a single inlet filter, Figure 5.

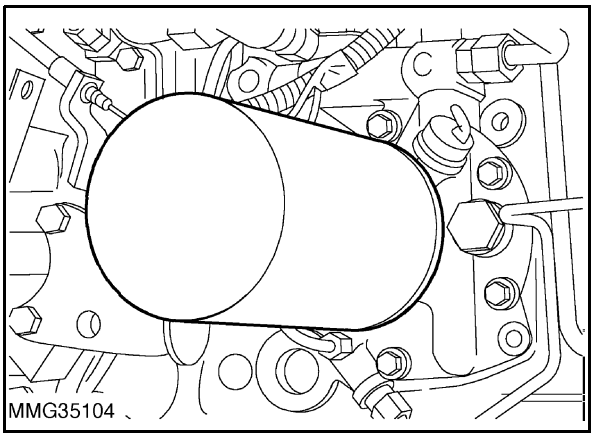

5

The auxiliary engine mounted hydraulic pump, where fitted, is installed on the front left hand side of the tractor and is driven by the camshaft drive gear, Figure 6.

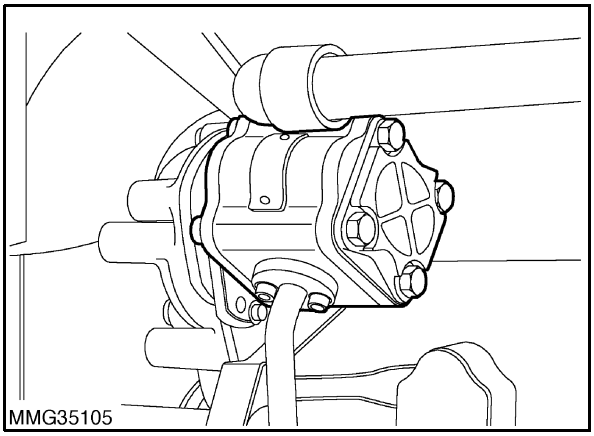

6

HYDRAULIC CIRCUIT DESCRIPTION

The circuits provided with oil by the transmission mounted hydraulic pumps can be separated into the following categories:-

Tractors With Closed Centre Load Sensing Variable Displacement Hydraulic Pump:

- High pressure circuit oil up to a maximum pressure of 2800 lbf/in^2 (193 bar) for operation of the hydraulic lift assembly, remote control valves and auxiliary hydraulic equipment, where fitted.
- Low pressure circuit oil for operation of the 16 x 16 transmission control circuits, PTO, differential lock, electronic draft control valve pilot pressure and four wheel drive circuits, where fitted.
- Hydrostatic steering system oil up to a maximum pressure of 2500 lbf/in^2 (172 bar) which is then regulated to provide low pressure oil for lubrication of the PTO and 16 x 16 transmission.

Tractors With Fixed Displacement Tandem Gear Type Pump:

- High pressure oil up to a maximum pressure of 2650 lbf/in^2 (183 bar) for operation of the hydraulic lift assembly, remote control valves and auxiliary hydraulic equipment, where fitted.
- Hydrostatic steering system oil up to a maximum pressure of 2500 lbf/in^2 (172 bar) which is then regulated to provide low pressure oil for operation of the PTO, four wheel drive disengagement system, differential lock and lubrication of 12 x 12 transmission synchronisers, bearings, output shaft and PTO.

The basic hydraulic circuits for each type of installation are shown in schematic format in Figure 7, Figure 8 and Figure 9 of this Chapter.

For a detailed description and operation of the high pressure hydraulic lift circuits refer to the following Chapters in this Part of the Repair Manual.

For tractors installed with the variable displacement hydraulic pump and electronic draft control, refer to Chapters 2 and 3.

For tractors installed with the variable displacement hydraulic pump and top link sensing, refer to Chapters 2 and 4.

For tractors installed with fixed displacement gear type hydraulic pumps, refer to Chapter 5.

For the hydraulic operation of the transmission, PTO, differential lock, steering and four wheel drive disengagement systems, refer to the appropriate Part and Chapters of this Repair Manual which describe the operation of the component.

Figure 7
Hydraulic Circuit for Tractor with CCLS Variable Displacement Piston Pump and Electronic Draft Control

1. Electronic Draft Control Valve
2. Load Sensing Line from Electronic Draft Control Valve
3. Load Sensing Line from Remote Valves
4. Shuttle Valves
5. Flow Compensating Valve
6. Pressure Compensating Valve
7. Charge Pressure Bypass Valve
8. Charge Pressure Filter
9. Charge Pressure Filter Dump Valve
10. Low Charge Pressure Switch
11. Oil Supply to Power Steering Motor, Oil Cooler, Transmission and PTO Lubrication Circuits
12. Steering Pump
13. High Oil Temperature Switch
14. Steering Pump Inlet Filter
15. Steering Filter Low Temperature Switch
    (Prevents Blocked Steering Filter Light Working when Oil Temperature Below 40°C, 104°F)
16. Blocked Steering Filter Vacuum Switch
17. Charge Pump Inlet Filter
18. Charge Pump
19. Pump Gear Drive Train
20. Variable Displacement Piston Pump
21. Trailer Brake Valve (where fitted)
22. Pressure Regulating Valve
23. Low Pressure Circuit Safety Valve
24. Low Transmission Oil Pressure Switch
25. Low Pressure Circuit Oil Supply to PTO, Differential Lock, Transmission Control Circuits and Four Wheel Drive
26. To Hydraulic Lift Cylinder
27. To Remote Valves
28. Load Sensing Line from Trailer Brake Valve

A Load Sensing Line from Hydraulic Lift, Trailer Brake and Remote Control Valve Circuits
B Return to Sump Gallery from Flow and Pressure Compensating Valves
C Gallery to Swash Plate Servo Piston from Flow and Pressure Compensating Valves
D System Pressure Sensing Gallery to Flow and Pressure Compensating Valves

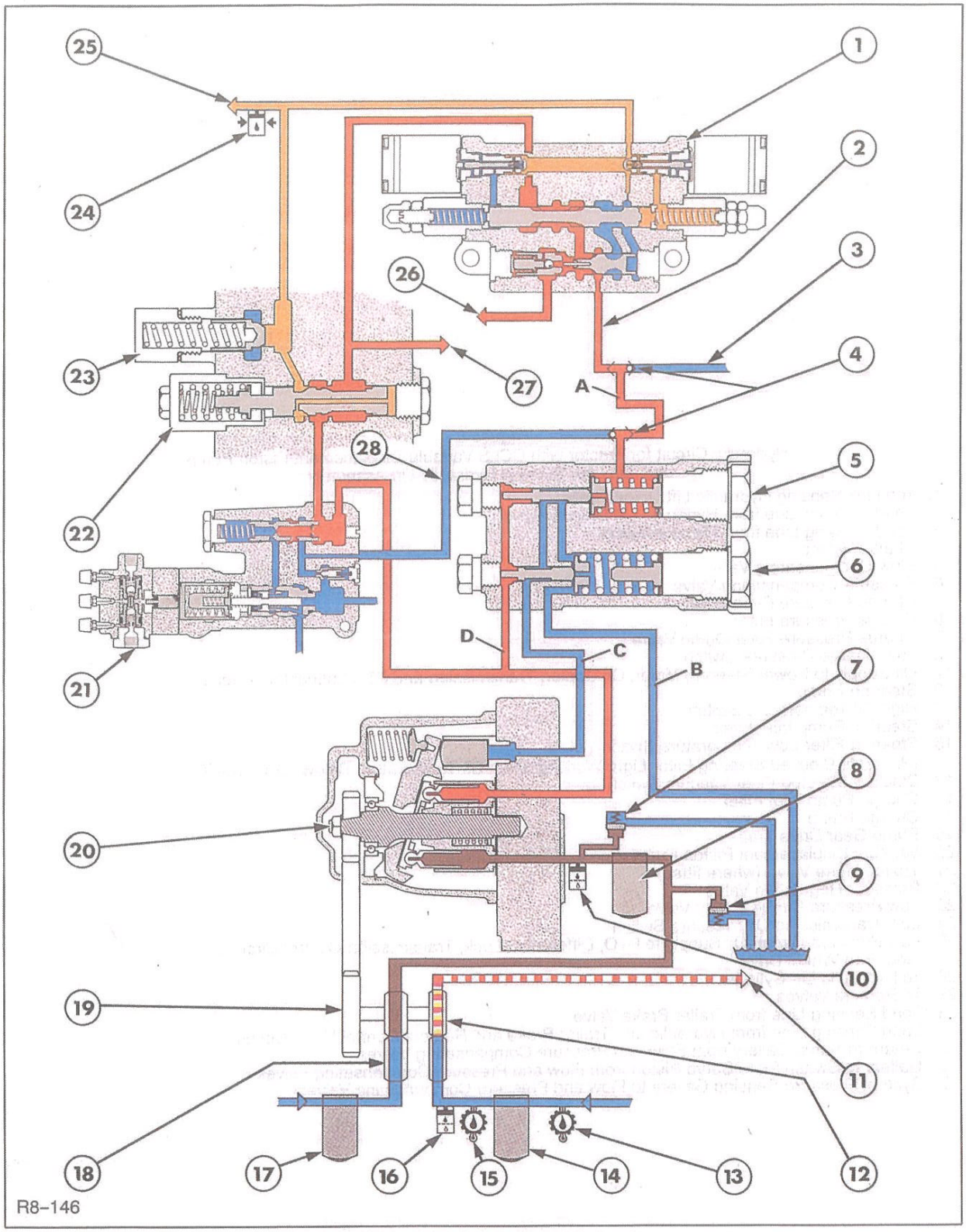

Hydraulic Circuit for Tractor with CCLS Variable Displacement Piston Pump and Electronic Draft Control 7

- Steering System Oil
- Low Pressure Circuit Oil @ 250–280 lbf/in^2 (17–19 bar)
- System Pressure Oil
- Charge Pressure Oil @ 23–50 lbf/in^2 (1.6–3.4 bar)
- Suction/Return to Reservoir Oil

Figure 8
Hydraulic Circuit for Tractor with CCLS Variable Displacement Piston Pump and Top Link Sensing Hydraulic Lift Assembly

1. Top Link Sensing Hydraulic Lift Unload Valve
2. Load Sensing Line from Hydraulic Lift Unload Valve
3. Load Sensing Line from Remote Valves
4. Shuttle Valves
5. Flow Compensating Valve
6. Pressure Compensating Valve
7. Charge Pressure Bypass Valve
8. Charge Pressure Filter
9. Charge Pressure Filter Dump Valve
10. Low Charge Pressure Switch
11. Oil Supply to Power Steering Motor, Oil Cooler, Transmission and PTO Lubrication Circuits
12. Steering Pump
13. High Oil Temperature Switch
14. Steering Pump Inlet Filter
15. Steering Filter Low Temperature Switch
    (Prevents Blocked Steering Filter Light Working when Oil Temperature Below 40°C, 104°F)
16. Blocked Steering Filter Vacuum Switch
17. Charge Pump Inlet Filter
18. Charge Pump
19. Pump Gear Drive Train
20. Variable Displacement Piston Pump
21. Trailer Brake Valve (where fitted)
22. Pressure Regulating Valve
23. Low Pressure Circuit Safety Valve
24. Low Transmission Oil Pressure Switch
25. Low Pressure Circuit Oil Supply to PTO, Differential Lock, Transmission Control Circuits and Four Wheel Drive
26. To Hydraulic Lift Cylinder
27. To Remote Valves
28. Load Sensing Line from Trailer Brake Valve

A Load Sensing Line from Hydraulic Lift, Trailer Brake and Remote Control Valve Circuits
B Return to Sump Gallery from Flow and Pressure Compensating Valves
C Gallery to Swash Plate Servo Piston from Flow and Pressure Compensating Valves
D System Pressure Sensing Gallery to Flow and Pressure Compensating Valves

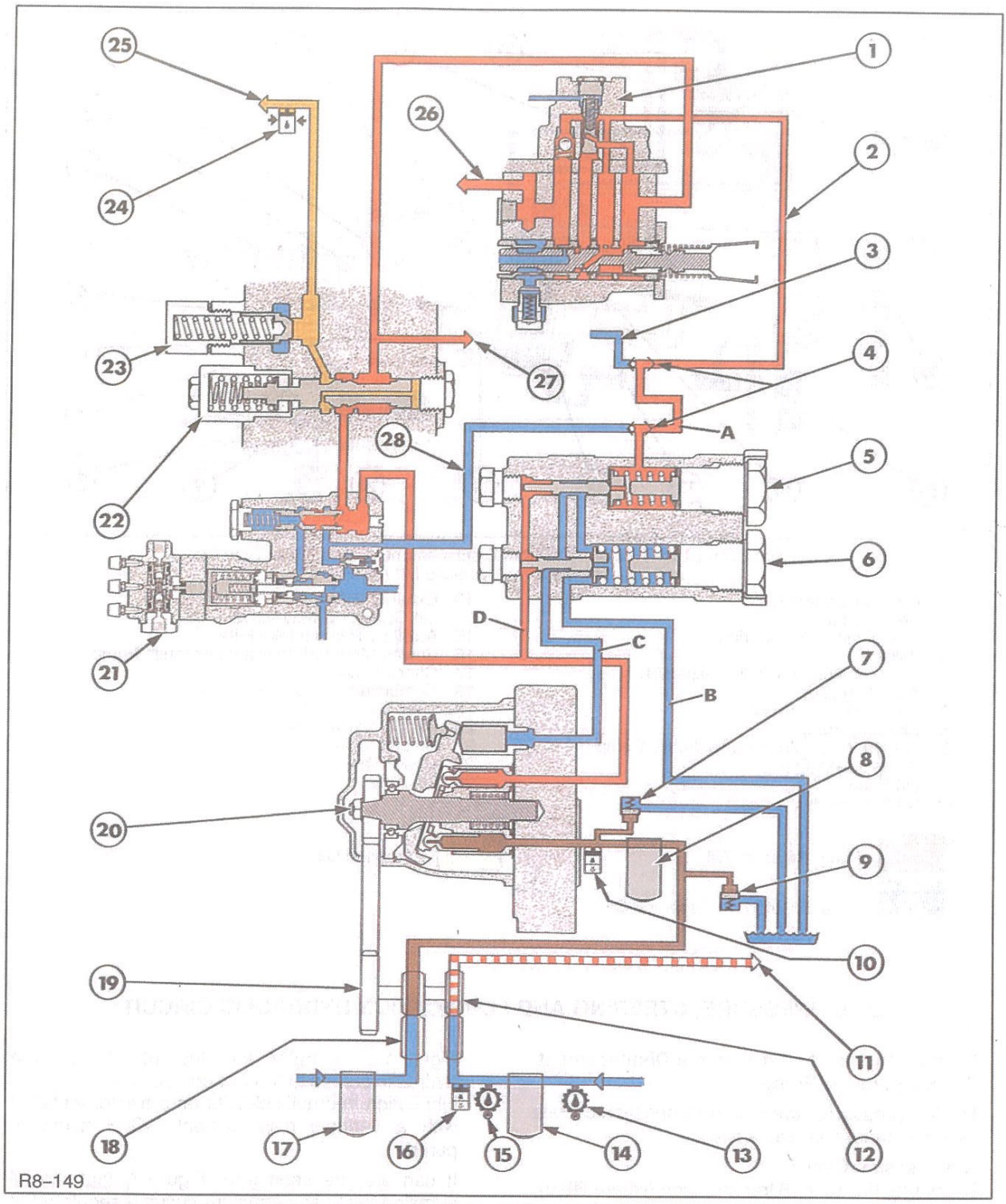

Hydraulic Circuit for Tractor with CCLS Variable Displacement Piston Pump and Top Link Sensing Hydraulic Lift Assembly 8

Steering System Oil

Low Pressure Circuit Oil @ 250–280 lbf/in^2 (17–19 bar)

System Pressure Oil

Charge Pressure Oil @ 23–50 lbf/in^2 (1.6–3.4 bar)

Suction/Return to Reservoir Oil

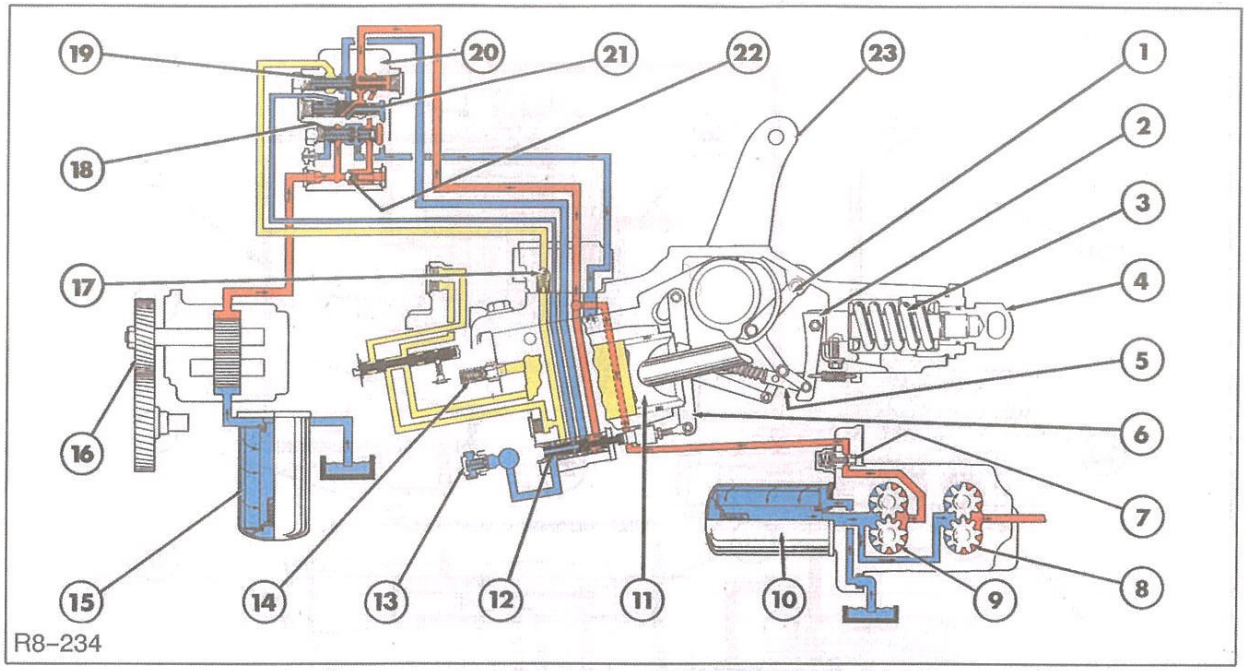

Hydraulic Circuit for Tractor with Fixed Displacement Tandem Gear Type Pump and Top Link Sensing Hydraulic Lift Assembly 9

1. Position Control Link
2. Selector Link
3. Draft Control Mainspring
4. Yoke
5. Selector Rod and Roller Assembly
6. Actuating Link
7. Pressure Relief Valve
8. Steering Pump
9. Transmission Mounted Hydraulic Pump
10. Pump Intake Filter
11. Lift Piston
12. Control Valve
13. Exhaust Valve
14. Lift Cylinder Safety Valve
15. Auxiliary Pump Intake Filter
16. Engine Mounted Auxiliary Hydraulic Pump
17. Check Valve
18. Combining (Sequencing) Valve
19. Flow Control Valve
20. Priority Valve Pack
21. Unload Valve
22. Check Valve
23. Lift Arms

Pump Pressure Oil

Trapped Oil

Suction/Return to Reservoir Oil

LOW PRESSURE, STEERING AND LUBRICATION HYDRAULIC CIRCUITS

Tractors Installed with Variable Displacement CCLS Hydraulic Pump

The low pressure, steering and lubrication circuits have two functions respectively:–

Low Pressure Circuit:
To operate the 16 x 16 transmission (where fitted), PTO, differential lock and four wheel drive disengagement system with regulated low pressure oil supplied by the variable displacement CCLS piston pump.

Steering and Lubrication Circuit:
To operate the hydrostatic steering system and lubricate the PTO clutch assembly, transmission clutches, bearings and shafts with oil supplied by the integral fixed displacement steering pump.

Figure 10, illustrates the flow of oil from the hydraulic pumps to the low pressure, steering and lubrication hydraulic circuits on a tractor installed with a variable displacement CCLS hydraulic pump.

It can also be seen from Figure 7, that the oil supplied to the low pressure circuit is regulated at a pressure of 250–280 lbf/in^2 (17–19 bar) by the low pressure regulating valve housed on top of the pump. When this low pressure oil is directed to the transmission clutch control circuits, the pressure is further regulated within the transmission control valve. Refer to Section 6, for the description and operation of the hydraulic circuits within the 16 x 16 transmission.

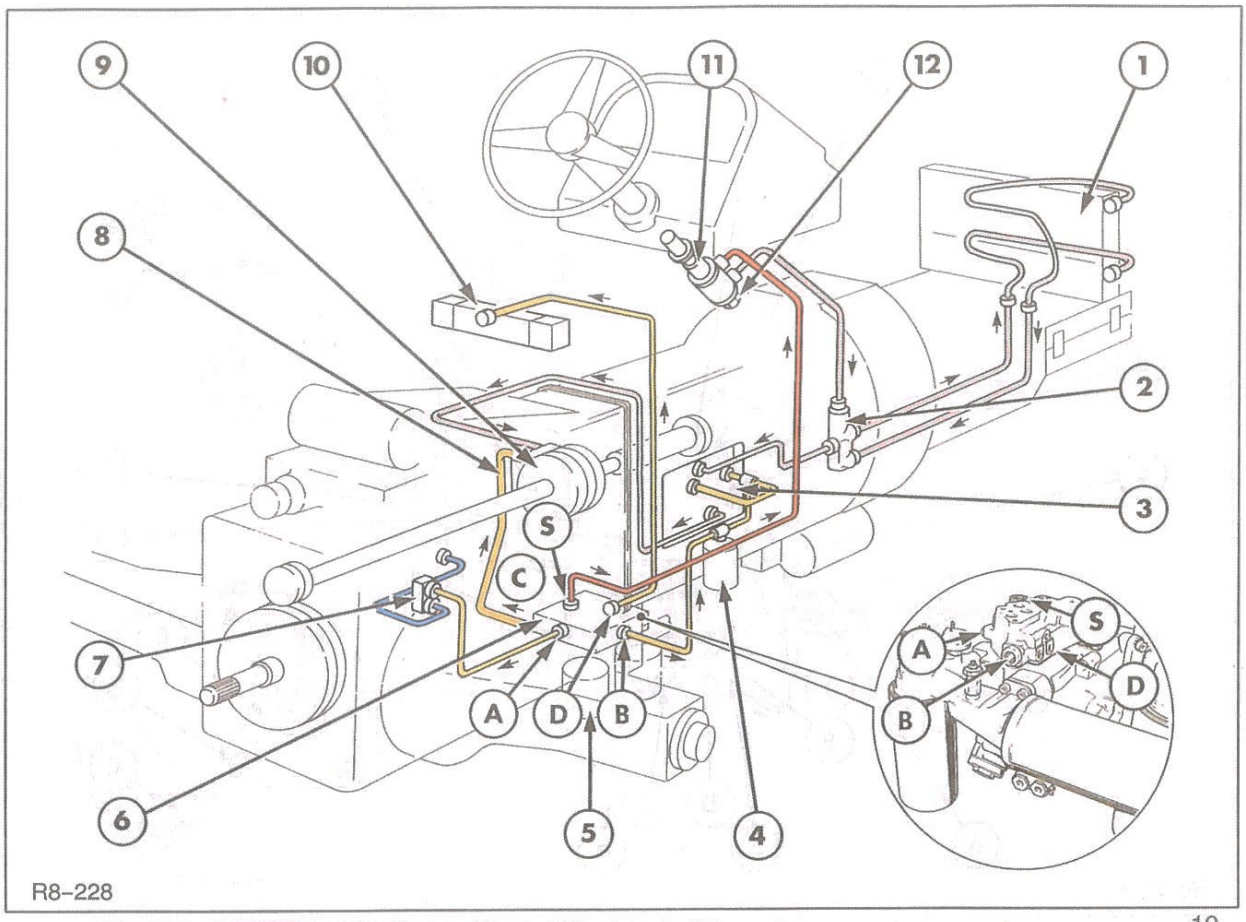

10

Low Pressure Steering and Lubrication Hydraulic System Layout
(Tractors Installed with Variable Displacement CCLS Hydraulic Pump and 16 x 16 Transmission)

1. Transmission Oil Cooler
2. Cooler Bypass Valve
3. 16 x 16 Transmission Control Valve
4. Transmission Accumulator
5. Steering Pump Filter
6. Low Pressure Regulating Valve
7. Differential Lock Solenoid Valve
8. PTO Valve Supply Tube
9. PTO Clutch
10. EDC Hydraulic Control Valve
11. Steering Motor
12. Steering Motor Relief Valve

A. Differential Lock Supply (17–19 bar)
B. 16 x 16 Transmission Supply (17–19 bar) and FWD Drive Clutch Supply
C. Internal Supply to PTO Clutch
D. EDC Pilot Supply (17–19 bar)
S. Output to Steering and Lubrication Circuits

Steering Pump Pressure Oil

Low Pressure Circuit Oil

Lubrication Circuit Oil

Return to Reservoir

When the hydrostatic steering system is in operation, the pressure of oil supplied by the steering pump to the steering motor, can rise towards the maximum setting of the steering motor relief valve, which is 2100–2500 lbf/in^2 (145–172 bar) depending on tractor model.

The pressure of oil, however, on leaving the steering motor and returning via the oil cooler to the 16 x 16 transmission and PTO clutch lubrication circuits, is limited to a maximum pressure of 100 lbf/in^2 (7 bar) by the lubrication circuit relief valve, located within the transmission control valve.

Should the oil cooler become restricted, which would cause oil starvation to the lubrication circuits, the cooler bypass valve will operate, diverting oil directly to the lubrication circuit and bypassing the cooler.

The operating pressure of the bypass valve should the cooler become restricted is 100 lbf/in^2 (7 bar).

The cooler bypass valve is also thermostatically controlled enabling a proportion of the cold oil during initial start up to bypass the cooler until the nominal operating temperature of 68°C (155°F) has been reached. This feature enables a faster warm up cycle of the hydraulic oil.

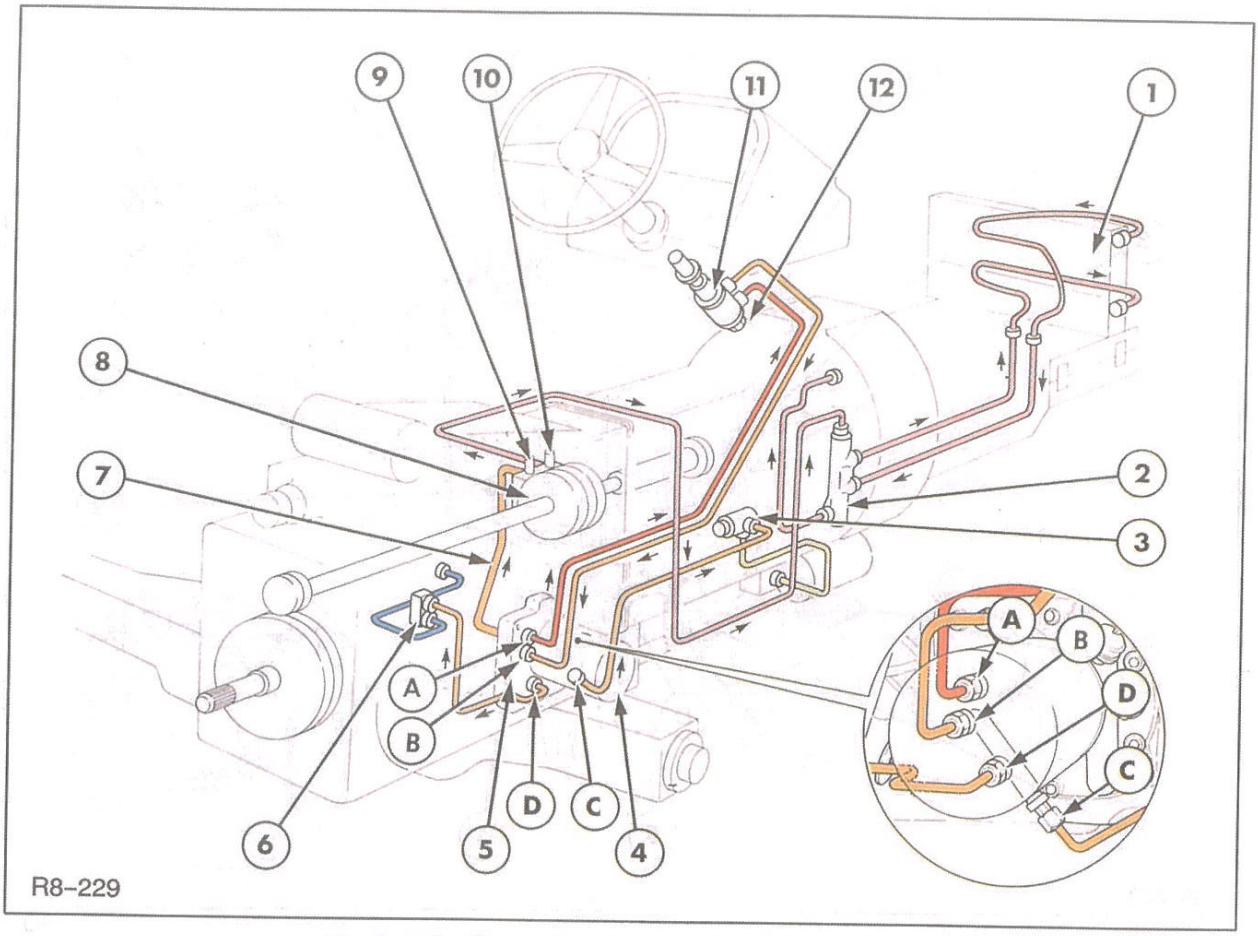

Steering, Low Pressure and Lubrication Hydraulic System Layout 11
(Tractors Installed with Fixed Displacement Tandem Gear Type Pump and 12 x 12 Transmission)

1. Transmission Oil Cooler
2. Cooler Bypass Valve
3. FWD Solenoid Valve
4. Tandem Pump Filter
5. Tandem Pump Body
6. Differential Lock Solenoid Valve
7. PTO Supply Tube (Internal)
8. PTO Clutch
9. Low Pressure Regulating Valve
10. Lubrication Relief Valve
11. Steering Motor
12. Steering Motor Relief Valve

A. Outlet to Steering Motor
B. Return from Steering Motor
C. Supply to Four Wheel Drive Valve
D. Supply to Differential Lock Valve

Steering Pump Pressure Oil

Low Pressure Circuit Oil

Lubrication Circuit Oil

Return to Reservoir

Tractors Installed with Fixed Displacement Tandem Gear Type Pumps

On tractors installed with the fixed displacement tandem gear type pump the oil supply for the steering, low pressure and lubrication circuits is only supplied by the steering pump within the tandem pump assembly.

Figure 11, illustrates the flow of oil from the steering pump to the steering motor, low pressure and lubrication circuits on tractors installed with the 12 x 12 transmission.

Figure 12, illustrates the flow of oil from the steering pump to the steering motor, low pressure and lubrication circuits on tractors installed with the 16 x 4 transmission.

As with tractors installed with the variable displacement CCLS hydraulic pump, the maximum pressure of oil supplied by the pump to the hydrostatic steering circuit, during steering operations, is regulated by the steering motor relief valve. This valve operates at 2100 lbf/in^2 (145 bar) on two wheel drive tractors and 2500 lbf/in^2 (172 bar) on all other models.

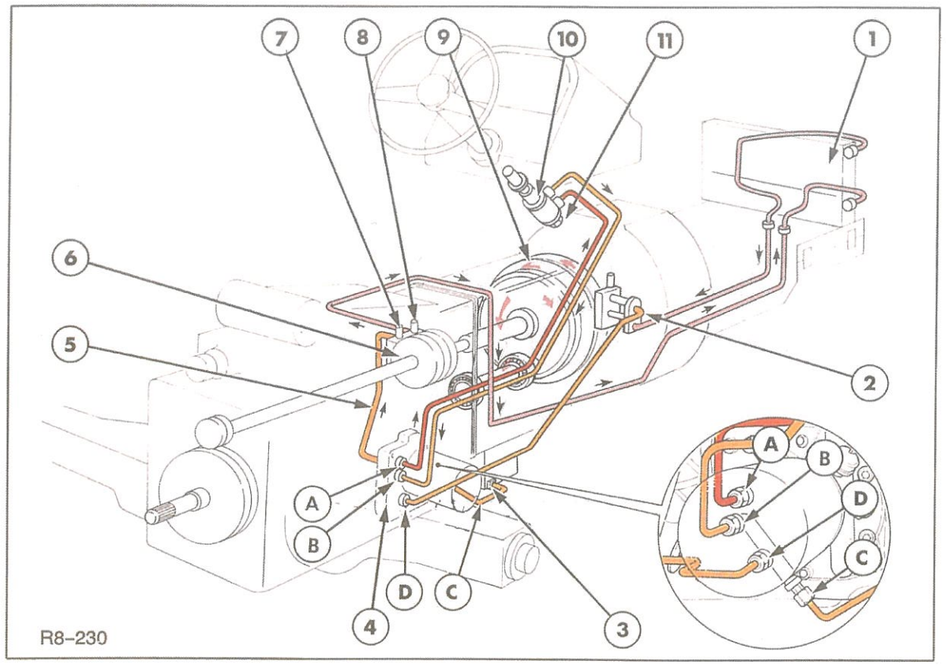

Steering, Low Pressure and Lubrication Hydraulic System Layout 12
(Tractors Installed with Fixed Displacement Tandem Gear Type Pump and 16 x 4 Transmission)

1. Transmission Oil Cooler
2. Dual Power Control Valve
3. FWD Solenoid Valve
4. Tandem Pump Body
5. PTO Supply Tube (Internal)
6. PTO Clutch
7. Low Pressure Regulating Valve
8. Lubrication Relief Valve
9. Dual Power Housing
10. Steering Motor
11. Steering Motor Relief Valve

A. Outlet to Steering Motor
B. Return from Steering Motor
C. Supply to Four Wheel Drive Valve
D. Supply to Dual Power Control Valve

Steering Pump Pressure Oil

Lubrication Circuit Oil

Low Pressure Circuit Oil

The flow of oil on leaving the steering motor returns to the pump body for distribution to the low pressure and lubrication circuits. The pressure of oil returning from the steering motor is regulated at a pressure of 220–240 lbf/in^2 (15.2– 16.6 bar) by the low pressure regulating valve in the PTO clutch assembly. As the pressure is regulated, excess oil in the low pressure circuit flows through the regulating valve, into an adjacent lubrication circuit relief valve which limits the pressure of oil in the lubrication circuit to 77 lbf/in^2 (5.3 bar).

The low pressure circuit provides oil for operation of the PTO clutch, electro hydraulic differential lock and transmission clutches and four wheel drive disengagement (where fitted).

The lubrication circuit on 12x12 transmission tractors provides oil to the PTO clutch, transmission synchronisers, bearing and output shaft.

On 16 x 4 transmission tractors lubrication is provided to the dual power, transmission output shaft and PTO clutch. This is also similar to that for tractors with the 8 x 2 transmission, except that the dual power assembly is not fitted.

It will be noted in Figure 12 that the cooler bypass valve is not fitted on tractors with the 16 x 4 or 8 x 2 transmission. This valve, however, is installed on tractors with the 12 x 12 transmission and improves the oil temperature warm up in exactly the same way as described for tractors with the 16 x 16 transmission.

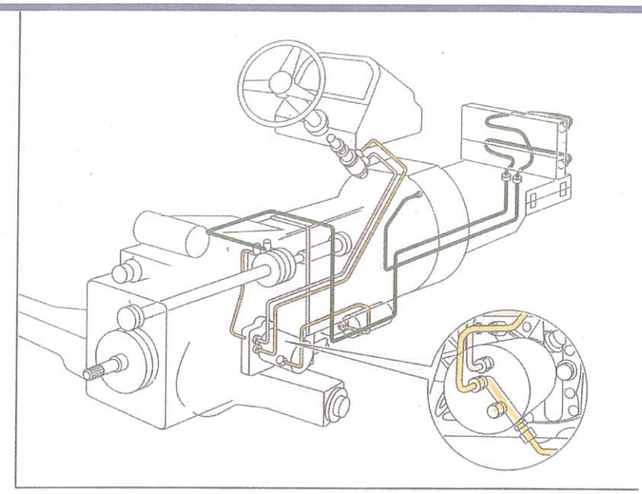

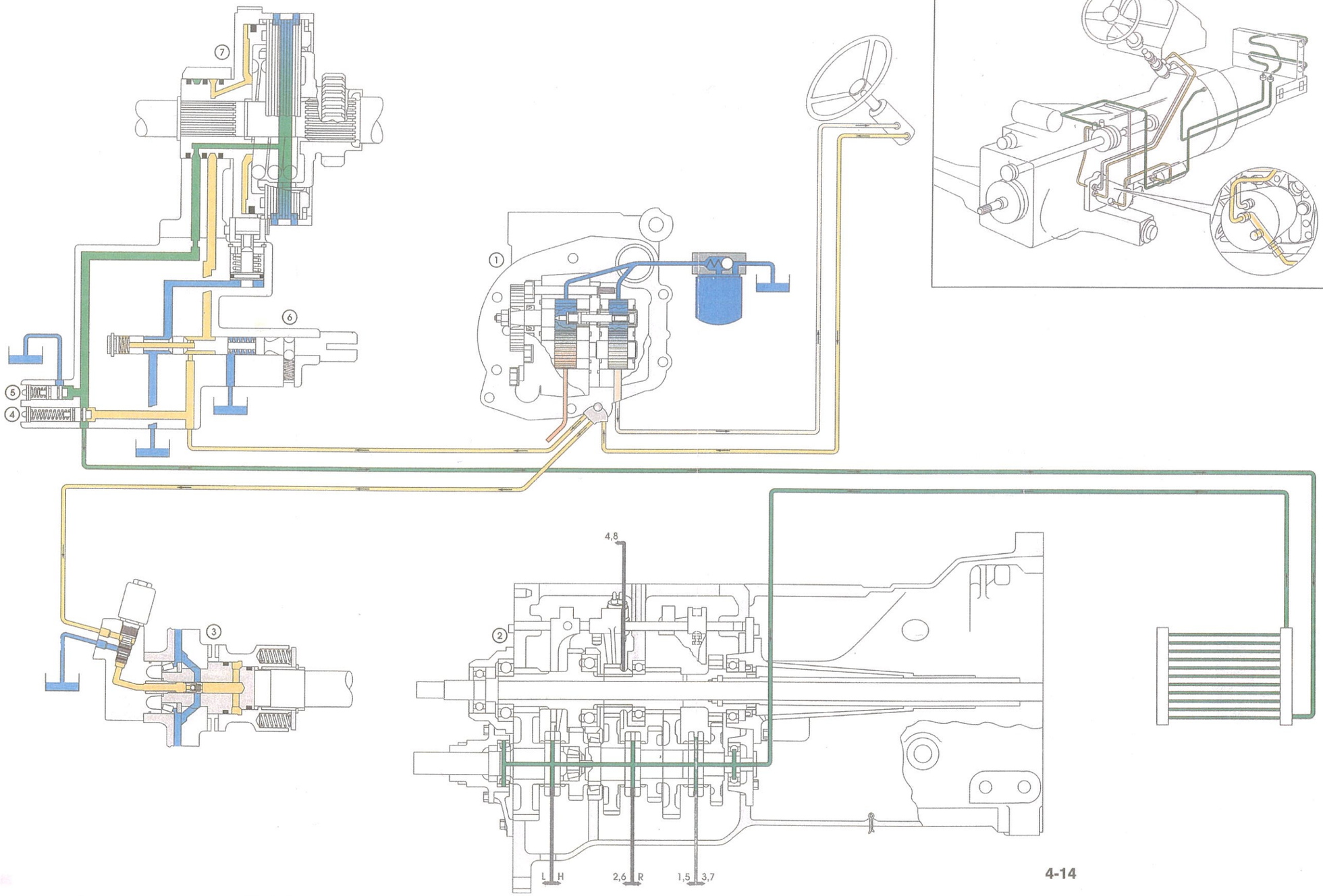
7
6
5
4
1
3
2
4,8
L
H
2,6
R
1,5
3,7
A
B
C
D
E

TS SERIES 8x2 ECONOSHIFT
LOW PRESSURE HYDRAULIC OIL FLOW

A = High Pressure Oil	180 Bar (2600 lbf.in2)
B = Steering Pressure up to	145 Bar (2100 lbf.in2) 2WD 172 Bar (2500 lbf.in2) 4WD
C = Steering Return Oil, Low Pressure Oil	12–14 Bar (170–200 ibf.in2)
D = Lubrication Oil	5.3 – 8.5 Bar (77–123 ibf.in2)
E = Suction / Return to Sump	

1. Transmission Mounted Tandem Gear Pump
2. Transmission 8x2
3. 4WD Clutch
4. Pressure Regulating Valve
5. Lubrication Relief Valve
6. PTO Control Valve – Engaged
7. PTO Clutch Assembly – Engaged

12x12 Synchro Command

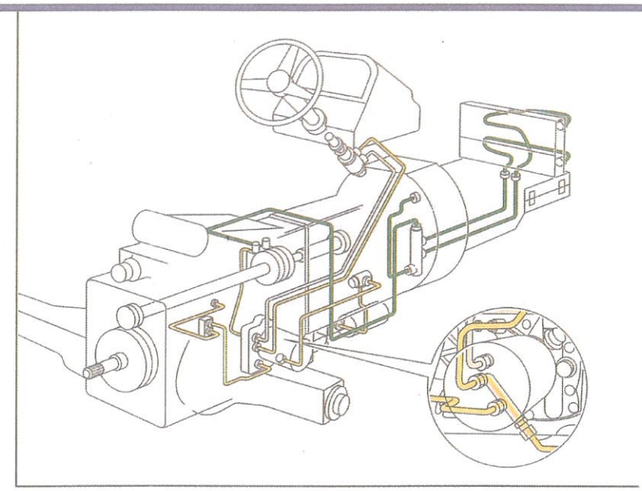

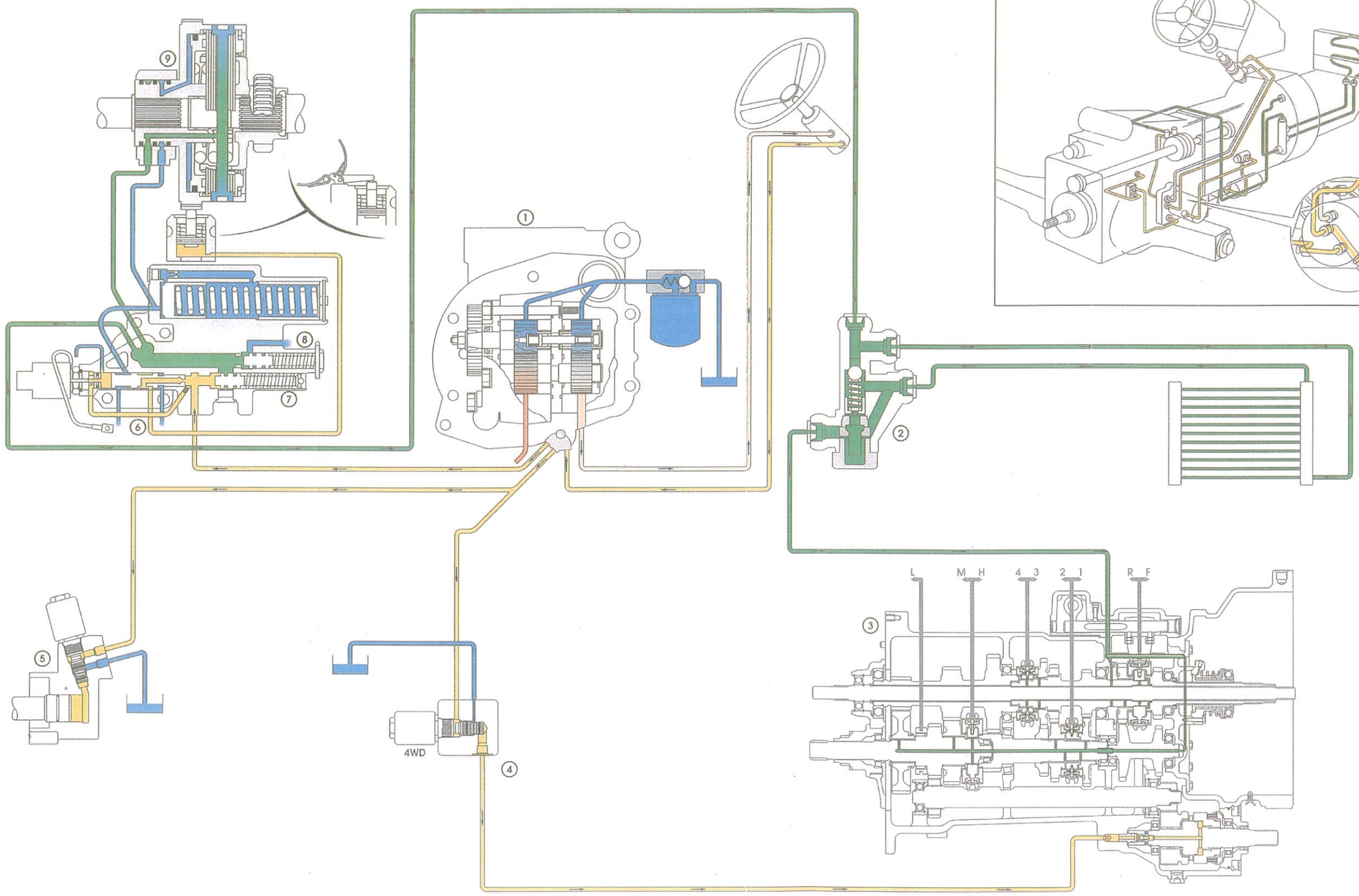

TS SERIES 12x12 SYNCHRO COMMAND
LOW PRESSURE HYDRAULIC OIL FLOW

A = High Pressure Oil	180 Bar (2600 lbf.in2)
B = Steering Pressure up to	145 Bar (2100 lbf.in2) 2WD 172 Bar (2500 lbf.in2) 4WD
C = Steering Return Oil, Low Pressure Oil	15–18 Bar (220–260 ibf.in2)
D = Lubrication Oil	5.0 Bar (70 ibf.in2)
E = Suction / Return to Sump	

1. Transmission Mounted Gear Pump
2. Oil Cooler By–pass Valve
3. Synchro Command Transmission
4. 4WD Solenoid
5. Differential Lock Solenoid Valve
6. PTO Control Valve – Engaged
7. Pressure Regulating Valve
8. Lubrication Circuit Relief Valve
9. PTO Clutch Assembly – Disengaged

24x24 Dual Command

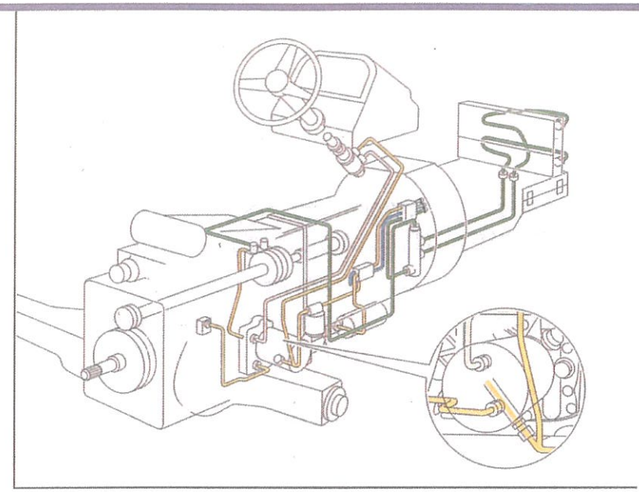

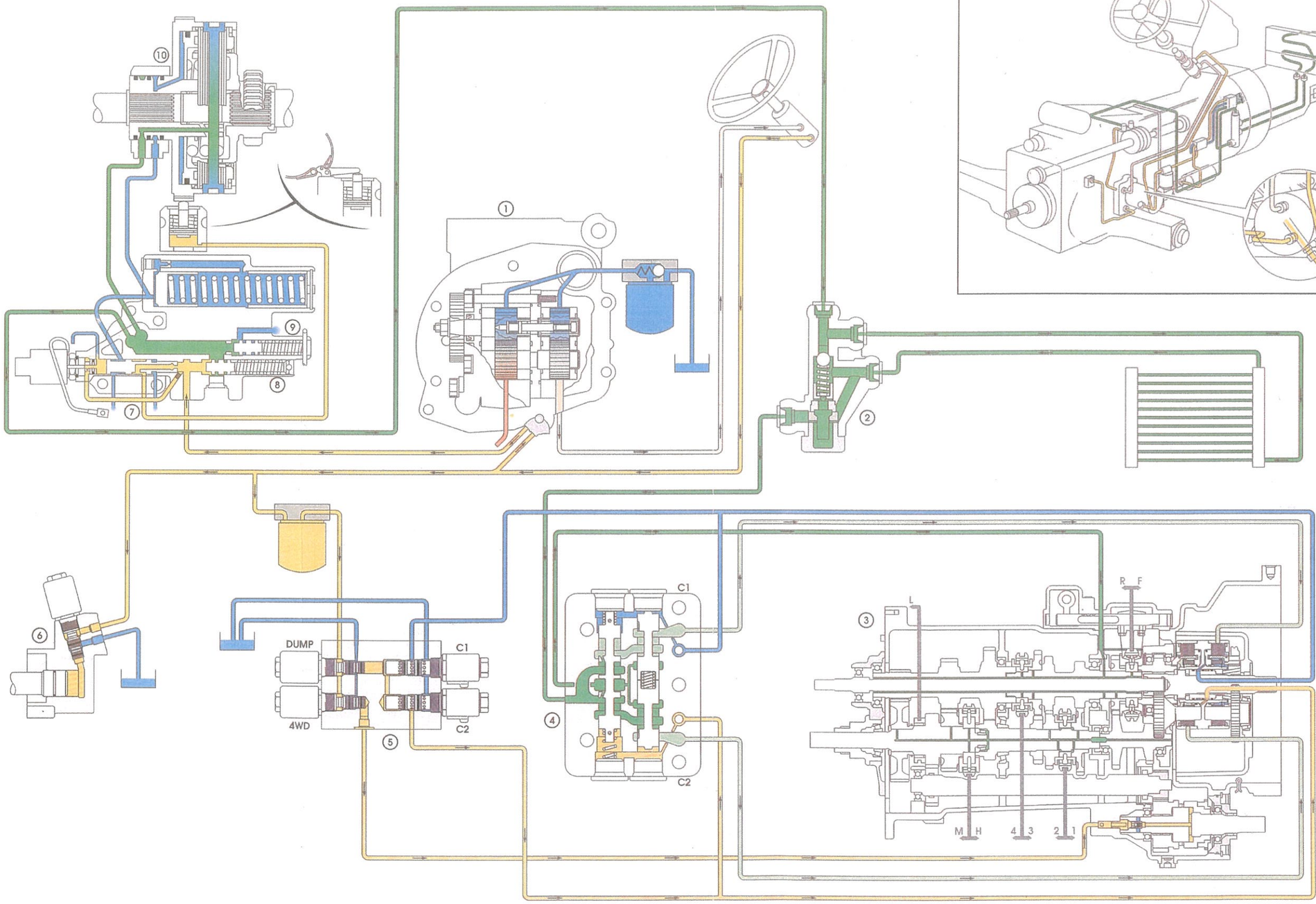

TS SERIES 24x24 DUAL COMMAND
LOW PRESSURE HYDRAULIC OIL FLOW

A = High Pressure Oil	180 Bar (2600 lbf.in2)
B = Steering Pressure up to	145 Bar (2100 lbf.in2) 2WD 172 Bar (2500 lbf.in2) 4WD
C = Steering Return Oil, Low Pressure Oil	15–18 Bar (220–260 ibf.in2)
D = Lubrication Oil	5.0 Bar (70 ibf.in2)
E = Restricted Pressure Lubrication Oil	
F = Suction / Return to Sump	

1. Transmission Mounted Gear Pump
2. Oil Cooler By–pass Valve
3. 24x24 Dual Command Transmission
4. Lubrication Control Valve
5. Transmission Control Valve Assembly
6. Differential Lock
7. PTO Control Valve
8. Pressure Regulating Valve
9. Lubrication Circuit Relief Valve
10. PTO Clutch Assembly – Disengaged

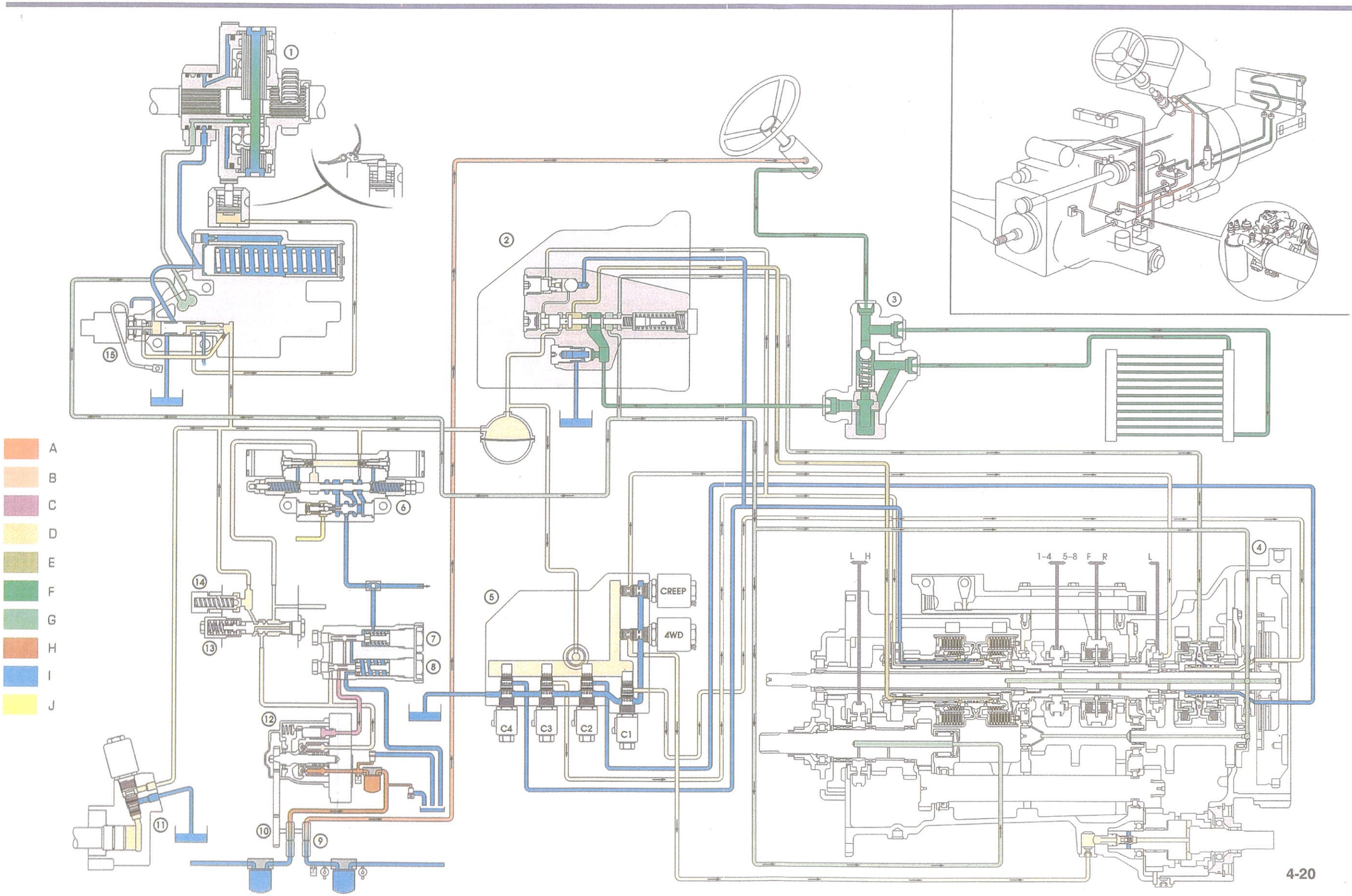
A
B
C
D
E
F
G
H
I
J
1
2
3
4
5
6
7
8
9
10
11
12
13
14
15
CREEP
4WD
C4
C3
C2
C1
L H
1-4 5-8 F R
L

TS SERIES 16x16 ELECTROSHIFT
LOW PRESSURE HYDRAULIC OIL FLOW

A = Steering Pressure up to 145 Bar (2100 lbf.in2) 2WD
172 Bar (2500 lbf.in2) 4WD

B = Standby Pressure Oil 24 Bar (350 lbf.in2)

C = Control Pressure Oil

D = Low Pressure Oil

E = Lubrication Oil Combined with Low Pressure Oil

F = Lubrication Oil 7 Bar (100 lbf.in2)

G = Restricted Lubrication Oil

H= Charge Pressure 1.6–3.4 Bar (23–50 lbf.in2)

I = Suction/Return to Sump

J = Trapped Oil

1. PTO Hub Assembly
2. Lubrication Control Valve Assembly
3. Cooler Bypass Valve
4. 16x16 Electroshift Transmission
5. Transmission Control Valve Block (engaging C3)
6. Electronic Draft Control Valve
7. Flow Compensating Valve
8. Pressure Compensating Valve
9. Steering Pump
10. Charge Pump
11. Differential Lock Solenoid Valve
12. Piston Pump
13. Pressure Regulating Valve
14. Low Pressure Safety Valve
15. PTO Control Valve

HYDRAULIC PUMP ASSEMBLY WITH VARIABLE DISPLACEMENT CLOSED CENTRE LOAD SENSING (CCLS)

SPECIFICATIONS AND SPECIAL TOOLS

Variable Displacement Closed Centre Load Sensing Swash Plate Pump with Integral Charge and Steering Pumps

Charge Pump

Type	Gear Type Pump
Minimum Output @ 2100 eng rev/min (New Pump)	24 US Galls/min, (20 Imp Galls/min, 90 ltrs/min) @ 90 lbf/in^2 (6.2 bar)
Charge Pressure Filter Dump Valve	Crack open @ 100 lbf/in^2 (6.9 bar) Fully open @ 180 lbf/in^2 (12.4 bar) Minimum 23 lbf/in^2 (1.6 bar)
Charge Pressure	@ 2100 rev/min and variable displacement pump 'On' load Maximum 50 lbf/in^2 (3.4 bar) @ 2100 rev/min and variable displacement pump 'Off' load
Charge Pressure Switch	Close @ 8–12 lbf/in^2 (0.55–0.82 bar) Making charge pressure warning light flash

Variable Displacement Closed Centre Load Sensing Pump

Type	Variable Piston Pump (Swash Plate Controlled)
Minimum Output @ 2100 eng rev/min (New Pump)	20 US Galls/min, (16.6 Imp Galls/min, 76 Ltrs/min) @ 2550 lbf/in^2 (176 bar)
Standby Pressure (Low Pressure Standby)	310–350 lbf/in^2 (21–24 bar)
Maximum System Pressure (High Pressure Standby)	2700–2800 lbf/in^2 (186–193 bar)
Low Pressure Hydraulic Circuit Pressure Regulating Valve	250–280 lbf/in^2 (17–19 bar)
Low Pressure Circuit Safety Valve	Crack open @ 290 lbf/in^2 (20 bar) Fully open @ 415 lbf/in^2 (29 bar)
Low Transmission Oil Pressure Switch (Tractors with 16 x 16 transmission only)	Close @ 210–220 lbf/in^2 (14.5–15.2 bar) making low transmission oil pressure warning light come 'On' Open @ 240–250 lbf/in^2 (16.5–17.2 bar) Making low transmission oil pressure warning light go 'Off'
Low Transmission Oil Pressure Switch (Tractors with 12 x 12 transmission only)	Close @ 80 lbf/in^2 (5.5 bar) Making low transmission oil pressure warning light come 'On' Open @ 120 lbf/in^2 (8.3 bar) Making low transmission oil pressure warning light go 'Off'
High Oil Temperature Switch	Close @ 104–110°C (219–230°F)

Steering Pump

Type	Gear Type Pump
Minimum Output @ 2100 eng rev/min (New Pump)	9.2 US Galls/min (7.7 Imp Galls/min 34.8 Ltrs/min) @ 2600 lbf/in^2 (169 bar)
Maximum Operating Pressure	2600 lbf/in^2 (179 bar)
Blocked Steering Filter Vacuum Switch	Close @ 18 in Hg. making blocked steering filter warning light come 'On' providing oil temperature 42-48°C (107-118°F)
Low Steering Oil Temperature Switch	Close @ 42-48°C (107-118°F)

THREAD SEALANT

New Holland Thread Lock & Seal, Part Number 82995773
Applied to pump driveshaft gear retaining nut.

SPECIAL TOOLS

DESCRIPTION	**TOOL NUMBER**	
	V.L. Churchill	**FNH Part No (America only)**
Pressure Gauge 0-100 lbf/in^2 (0-6.6 bar)	FT. 4096	FNH 02026
Pressure Gauge 0-600 lbf/in^2 (0-42 bar)	FT. 4100	FNH 02027
Pressure Gauge 0-6000 lbf/in^2 (0-414 bar)	FT. 8503A	FNH 02028
Pressure Gauge 0-400 lbf/in^2 (0-30 bar)	FT. 8616	FNH 06653
Elbow-Standby Pressure Test	86246-S36	
Adaptor-Pressure Test	FT. 8503-8	FNH 0705
Adaptor-By-pass Valve Pressure Test	4FT.850 ($^1/_4$"-18NPSF male-$^7/_{16}$" JIC male)	
Adaptor-Standby Pressure Test	4FT.851 (M14 x 1.5 male-$^7/_{16}$" JIC male)	
Adaptor-Steering Flow Test	4FT.852 ($^3/_4$"-18UNS female-$^3/_4$" JIC male)	
Adaptor-Steering Pressure Test	4FT.853 ($^{11}/_{16}$"-16UN to $^7/_{16}$" JIC male)	
Adaptor* -Trailer Brake Pressure Test	4FT.854 (M18-1.5 male to $^7/_{16}$" JIC male)	
Charge Pump Drive Gear Extractor	4FT.856	FNH 00880
By-pass and Dump Valve Extractor	4FT.857	FNH 00878
Flowmeter	MS. 820A or suitable equivalent	FNH 02755
Flowmeter Hoses	Procure locally to suit flowmeter used	
Adaptor-Hose to Flowmeter	Procure locally to suit flowmeter used	
Test Hose-Pressure Testing	Part No 83936707	
Test Hose-Pressure Testing	Part No 83926717	
Hose Clamp	Procure or manufacture locally	
Remote Control Valve Connectors	Procure through New Holland to suit hoses	

*Or suitable M18x1.5 male adaptor to suit test hose on pressure gauge if 83936707 not used

= Nm
= lbf ft

TORQUES

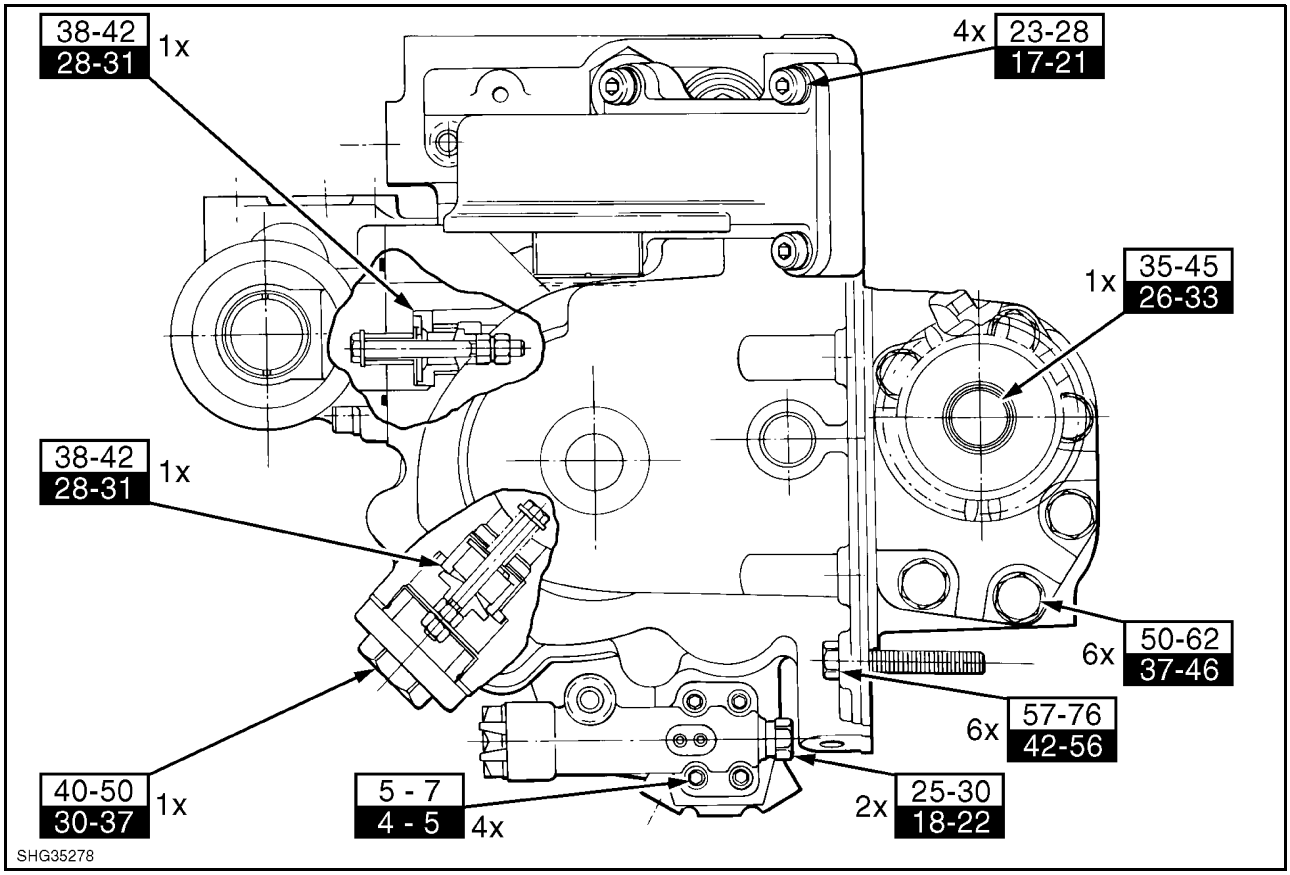

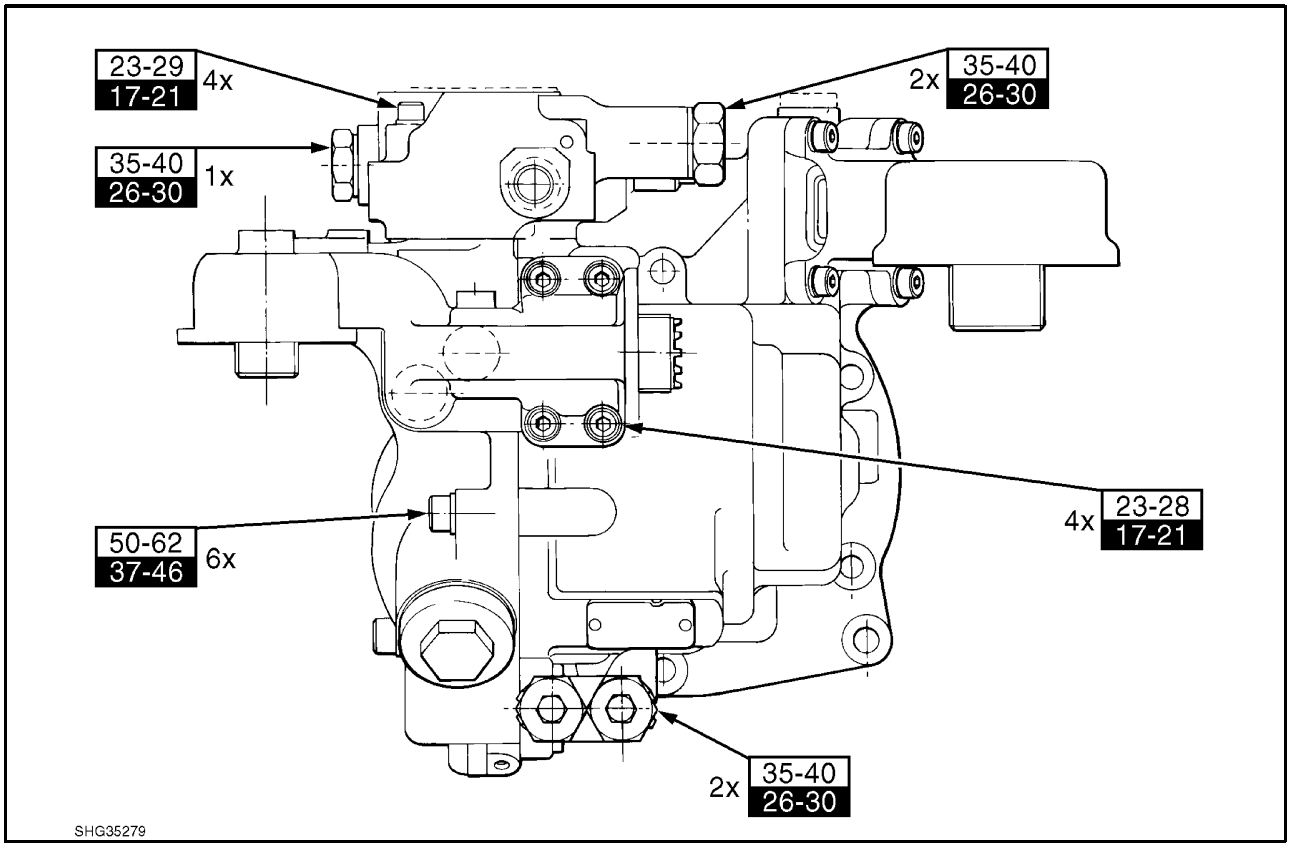

Hydraulic Connections

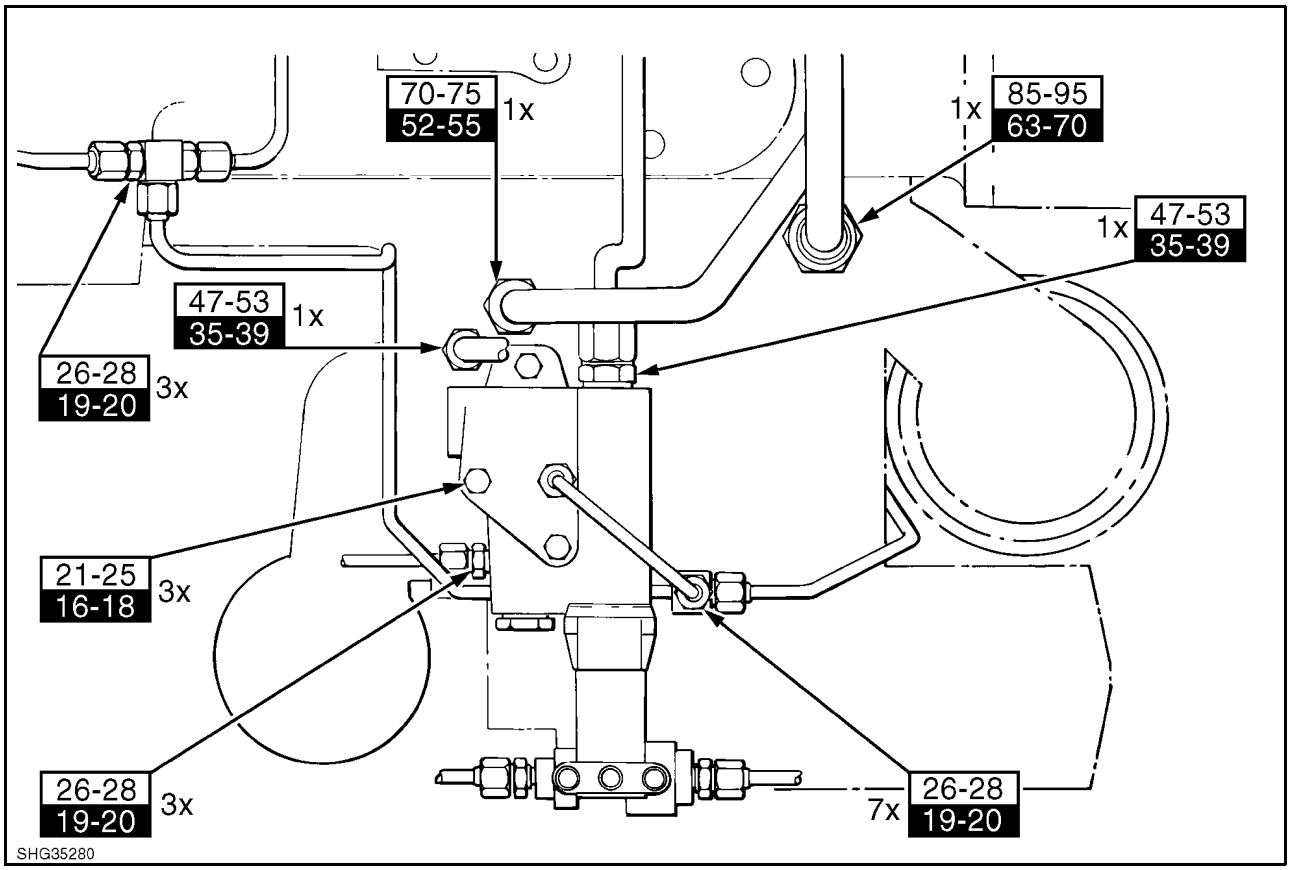

Plan View of Variable Displacement Hydraulic Pump Tube Connections

FAULT FINDING

This fault finding section is designed to assist in identifying the cause of incorrect operation of those hydraulic systems which are supplied with oil by the variable displacement hydraulic pump assembly with closed centre load sensing (CCLS) and integral charge and steering pumps.

The following fault finding diagnostic charts detailed in this section and should be referred to when analysing concerns with the hydraulic system on the tractor.

Initial Fault Finding Check

Charge Pressure Light Flashing

Transmission Pressure Warning Light 'On'

Hydraulic Lift not Working Correctly

Power Steering not Working Correctly

Trailer Brakes not Working

Remote Control Valves not Working

Differential lock, PTO, 16 x 16 Transmission and Four Wheel Drive Clutch Not Working (where fitted)

Before proceeding to the individual fault finding diagnostic charts it is important that reference is made to the initial check fault finding chart which may identify an obvious cause for the concern and prevent unnecessary component disassembly.

Where the fault finding specifies pressure or flow testing the pump or hydraulic circuit refer to Section D for the test procedure.

IMPORTANT: *If the steering is inoperative, their will be no lubrication to the transmission or PTO clutch and the tractor must not be run for more than 5 minutes at a maximum engine speed of 1000 rev/min.*

Initial Fault Finding Checks to be Performed Before Proceeding to General Diagnostic Procedure

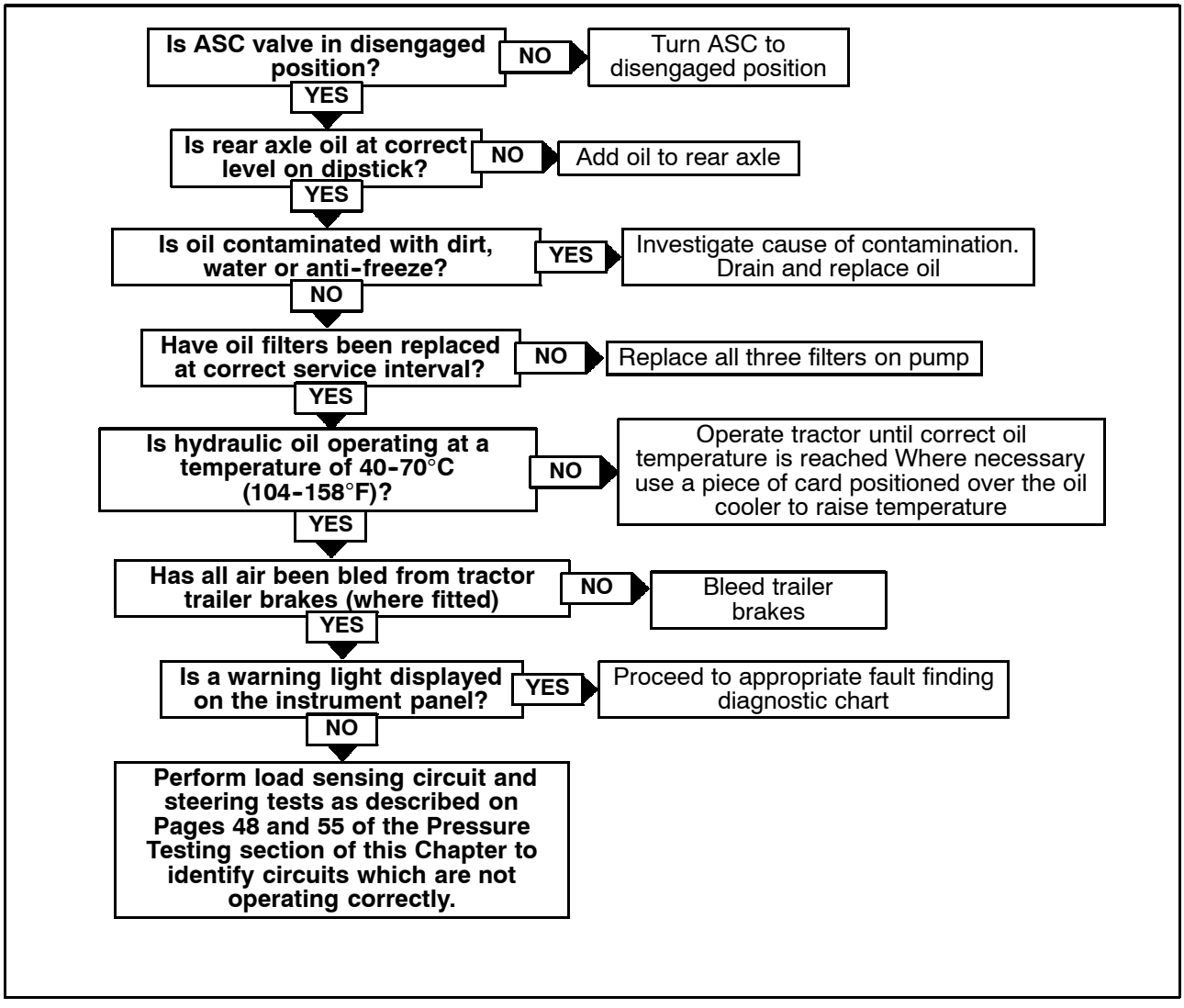

Charge Pressure Light Flashing

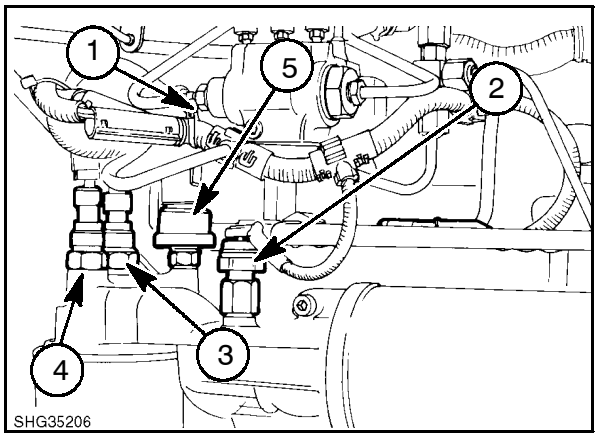

CCLS Hydraulic Pump Switch Identification 13

1. Low Transmission Oil Pressure Switch
2. Low Charge Pressure Switch
3. High Oil Temperature Switch
4. Steering Filter Low Temperature Switch
5. Blocked Steering Filter Vacuum Switch

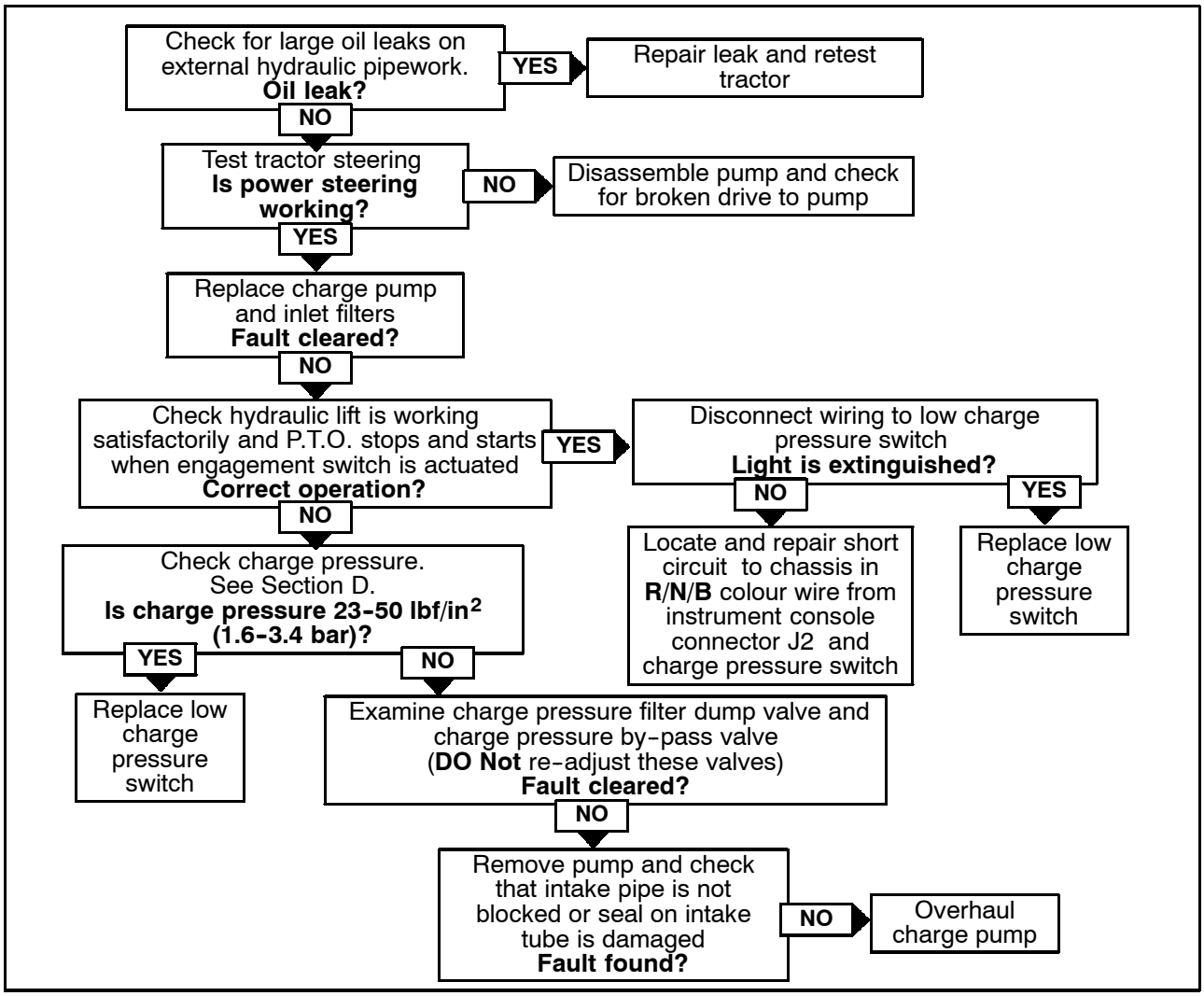

Transmission Pressure Warning Light 'ON'

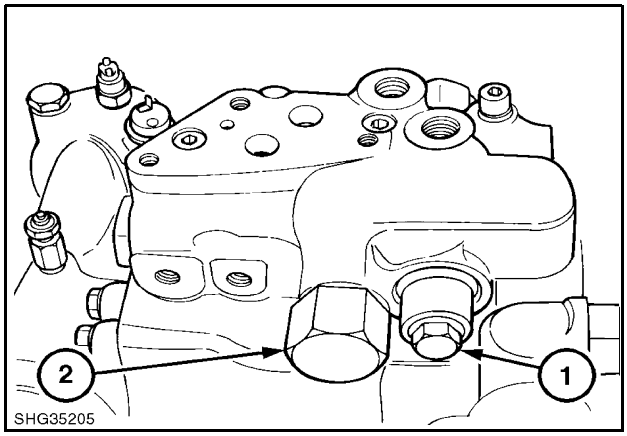

Pressure Regulating Valve 14

1. Pressure Regulating Valve
2. Low Pressure Circuit Safety Valve

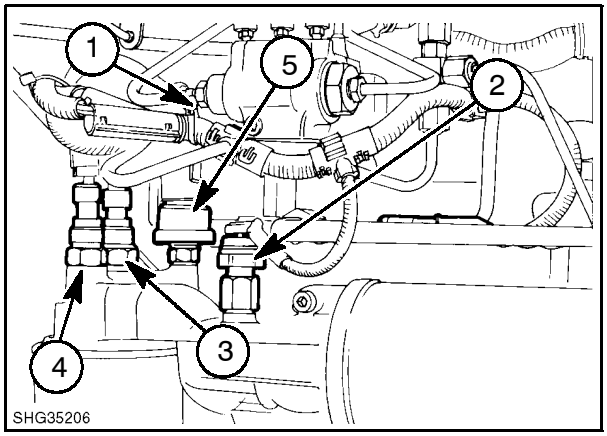

CCLS Hydraulic Pump Switch Identification 15

1. Low Transmission Oil Pressure Switch
2. Low Charge Pressure Switch
3. High Oil Temperature Switch
4. Steering Filter Low Temperature Switch
5. Blocked Steering Filter Vacuum Switch

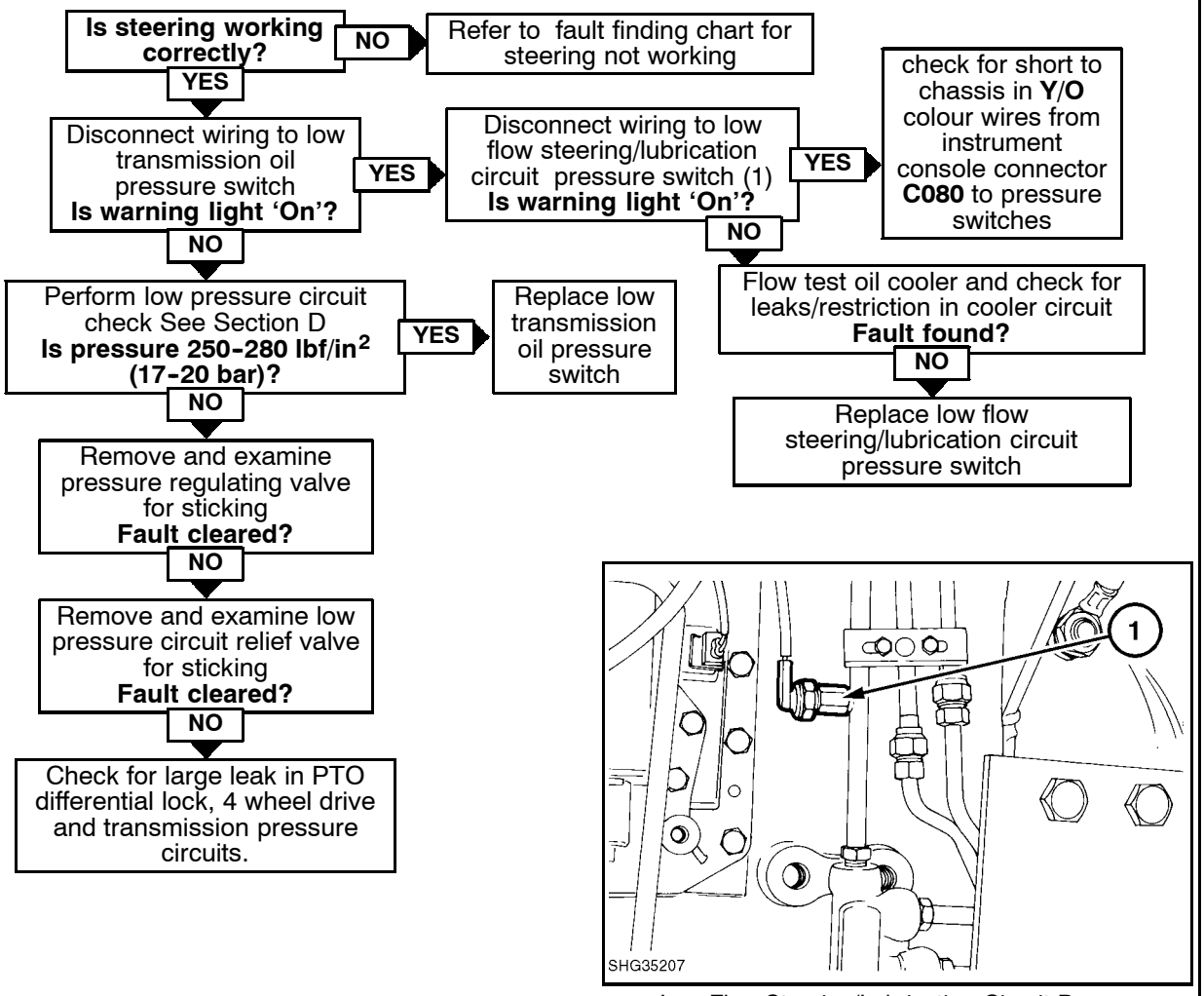

Low Flow Steering/Lubrication Circuit Pressure Switch

Hydraulic Lift Not Working Correctly

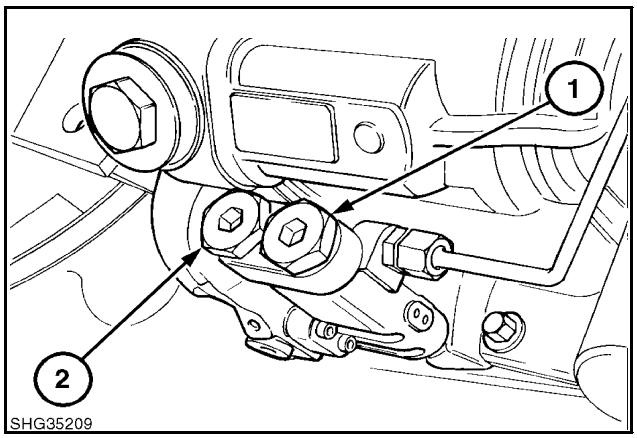

Flow and Pressure Compensating Valves 16

1. Flow Compensating Valve
2. Pressure Compensating Valve

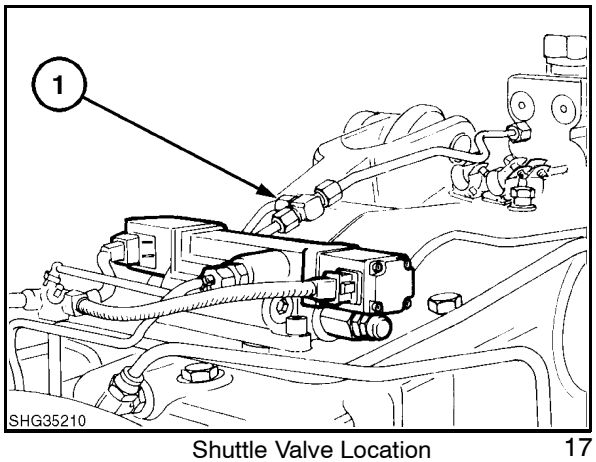

Shuttle Valve Location 17

1. Shuttle Valve to EDC/Unload Valve and Remote Control Valves

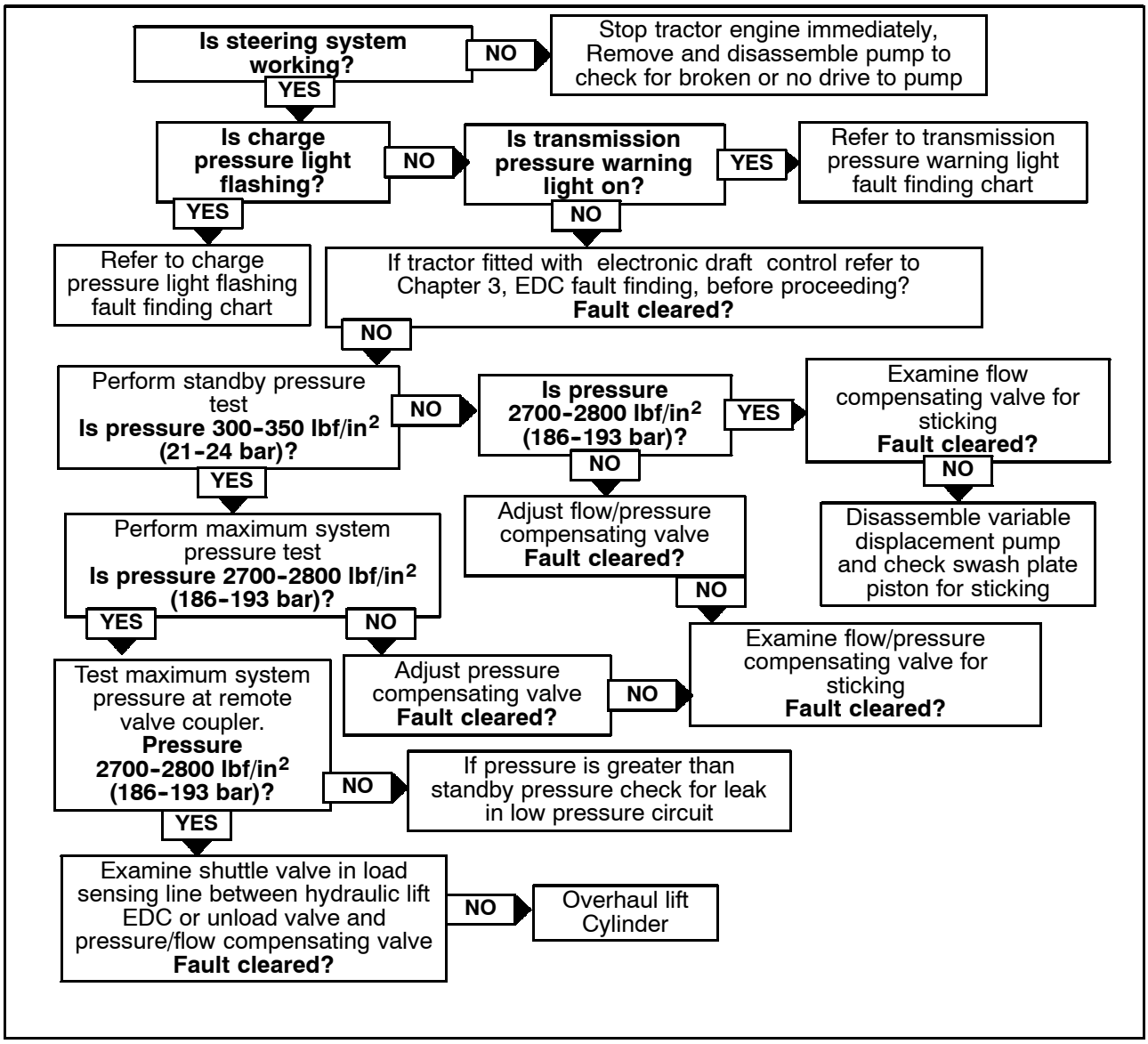

Power Steering Not Working or Working Incorrectly

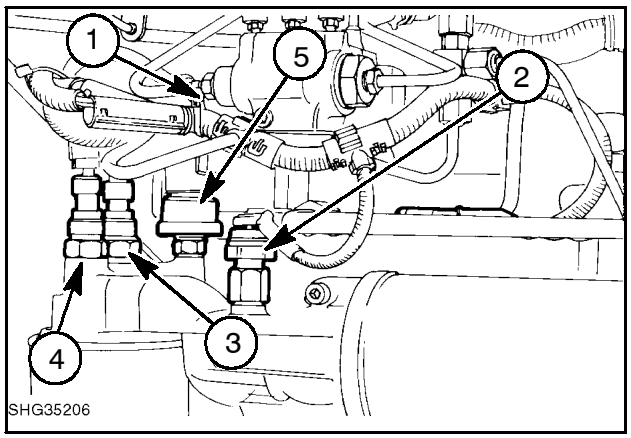

CCLS Hydraulic Pump Switch Identification 18

1. Low Transmission Oil Pressure Switch
2. Low Charge Pressure Switch
3. High Oil Temperature Switch
4. Steering Filter Low Temperature Switch
5. Blocked Steering Filter Vacuum Switch

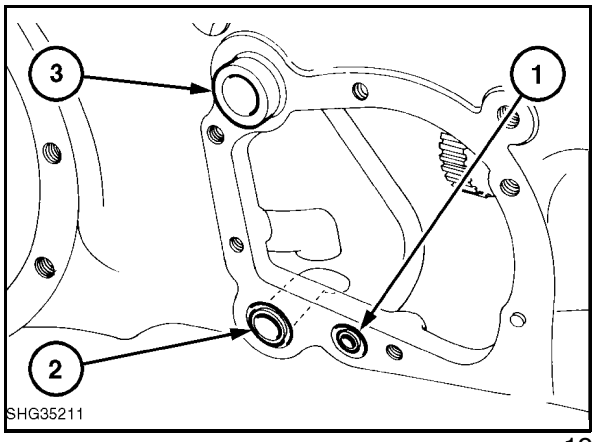

Hydraulic Pump Intake Tubes 19

1. PTO Supply Tube
2. Steering Pump Intake Tube
3. Charge Pump Intake Tube

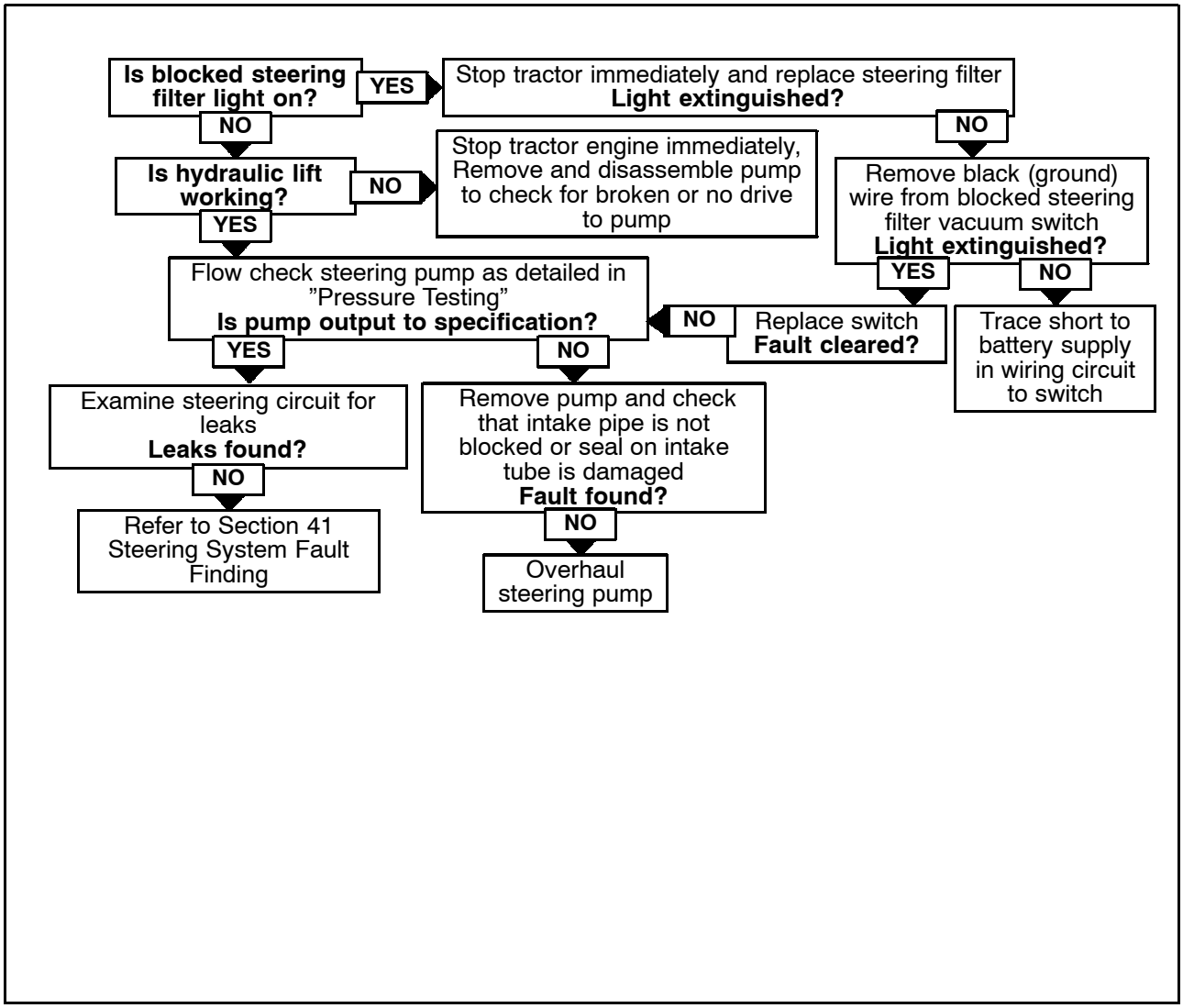

Trailer Brakes and Remote Control Valves Not Working

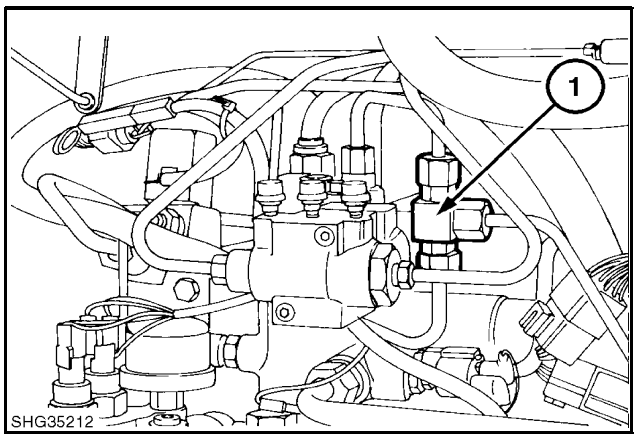

Trailer Brake Shuttle Valve Location 20

1. Trailer Brake Shuttle Valve

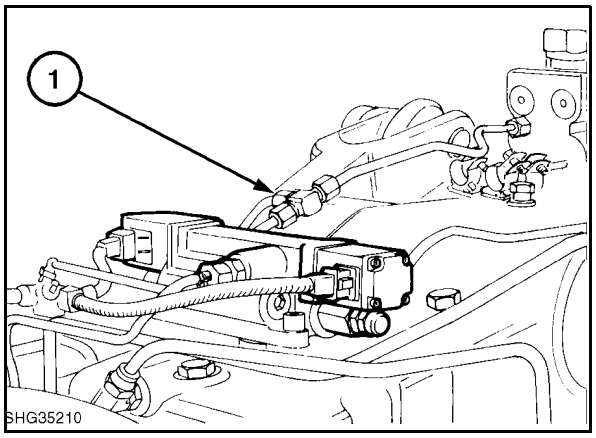

Shuttle Valve Location 21

1. Shuttle Valve to EDC/Unload Valve and Remote Control Valves

Trailer Brakes not Working

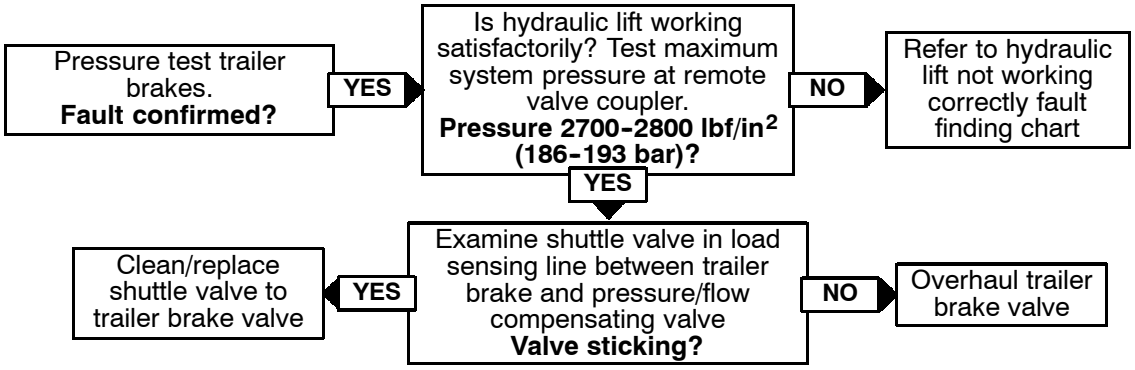

Remote Control Valves not Working

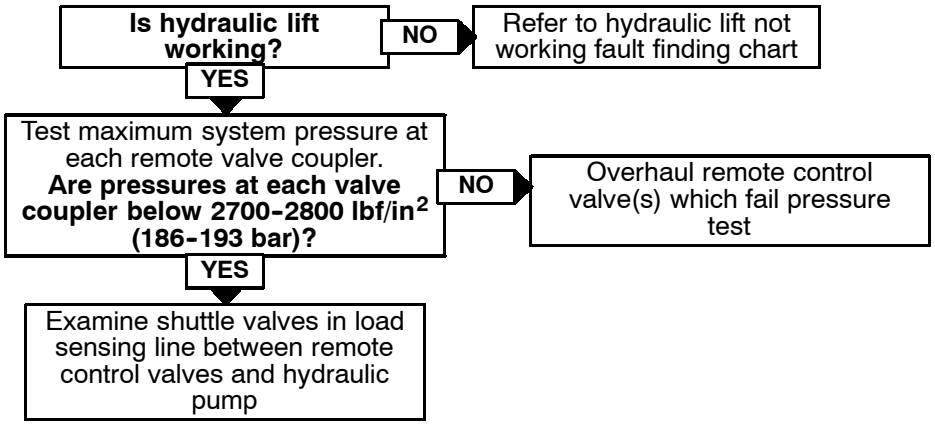

Differential Lock, PTO, 16 x 16 Transmission and Four Wheel Drive Clutch Not Working (where fitted)

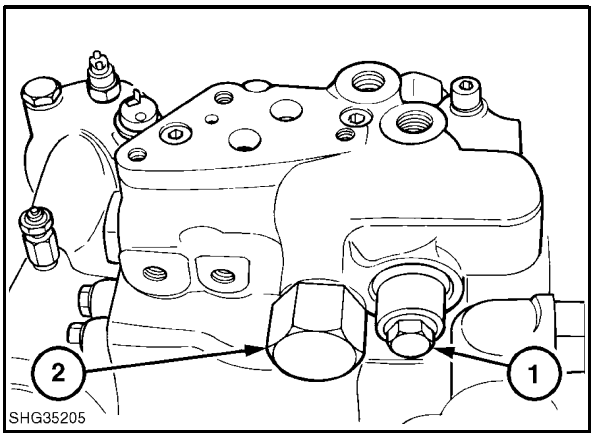

Pressure Regulating Valve 22

1. Pressure Regulating Valve
2. Low Pressure Circuit Safety Valve

NOTE: A fault in only one of the components listed above indicates that the Hydraulic pump with closed centre load sensing is not the cause of the concern but is due to a malfunction in the circuit or valves which operate the defective system. Use the following fault finding chart when all of the above functions fail to operate correctly

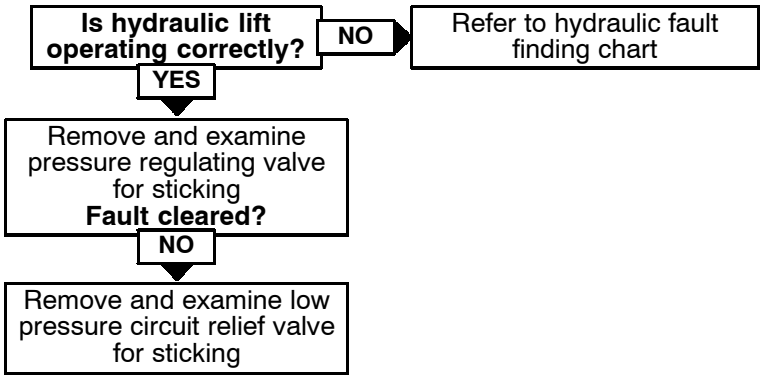

DESCRIPTION AND OPERATION

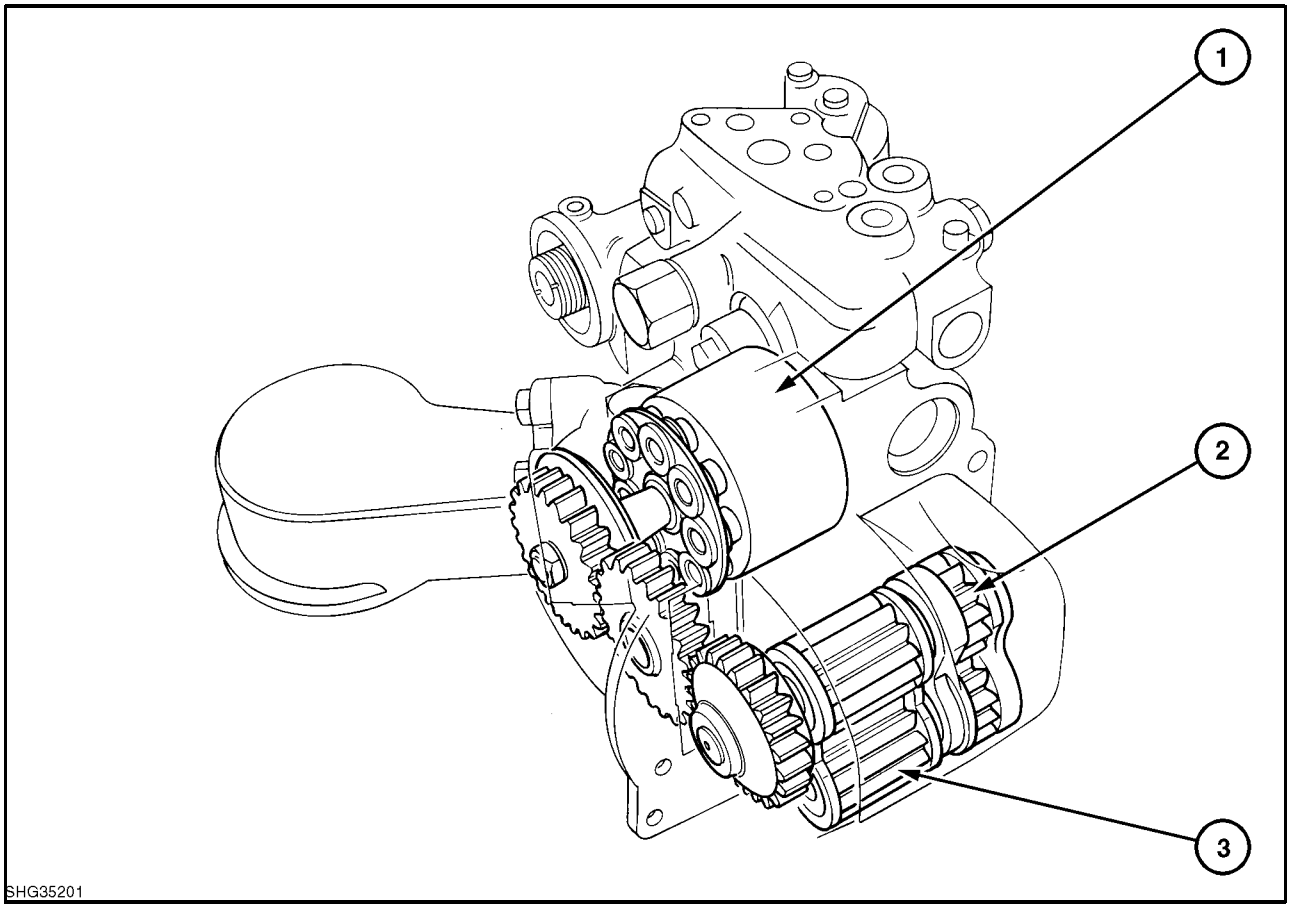

Hydraulic Pump Assembly With Variable Displacement Closed Centre Load Sensing 23

1. Variable Displacement Piston Type Pump
2. Fixed Displacement Gear Type Pump–Steering
3. Gear Type Charge Pump

The hydraulic pump assembly, Figure 23, is mounted on the right hand side of the rear axle centre housing and contains within its body three hydraulic pumps.

- A charge pump of the gear type, supplies oil at a charge pressure of 23–50 lb/in^2 (1.6–3.4 bar) to a variable displacement piston pump.

- A fixed displacement pump of the gear type, supplying oil for operation of the hydrostatic steering system and transmission and PTO lubrication circuits.

- A variable displacement piston type pump installed in a closed centre load sensing system, supplying oil for the requirements of the trailer brake system and the regulated pressure circuit for the power take off (PTO), differential lock, four wheel drive disengagement system, transmission control valves and remote and hydraulic lift valves.

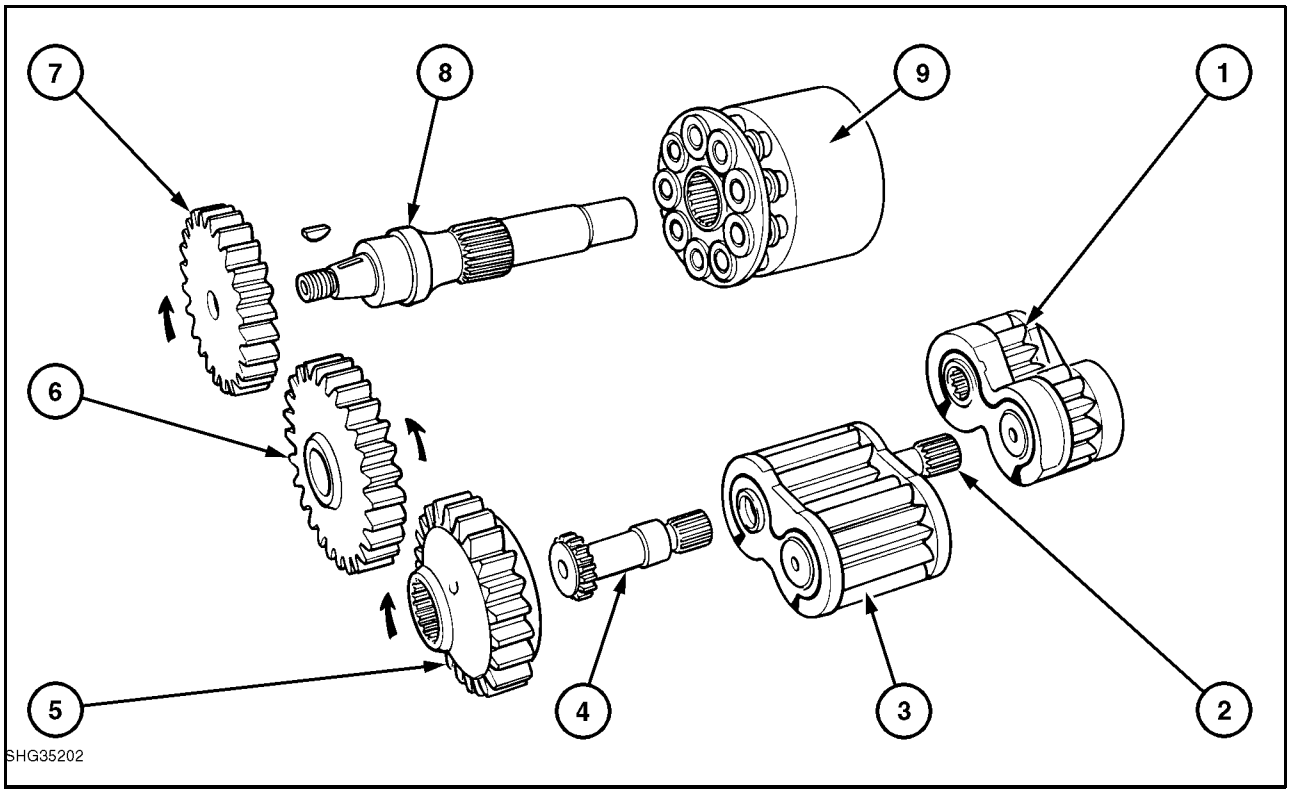

Hydraulic Pump Assembly Drive Train 24

1. Steering Pump (Gear Type)
2. Drive Link–Charge to Steering Pump
3. Charge Pump (Gear Type)
4. Drive Link–Drive Gear to Charge Pump
5. Charge and Steering Pump Drive Gear
6. Pump Idler Gear
7. Variable Displacement Pump Drive Gear
8. Variable Displacement Pump Drive Shaft
9. Variable Displacement Pump (Piston Type)

Illustrated in Figure 24, is the drive train for the charge and steering gear pumps and variable displacement piston pump. Note the mechanism which adjusts the swash of the pistons in the piston pump has been omitted for clarity.

All three pumping elements are driven through the charge and steering pump drive gear. This is in turn is driven by a gear on the independent power take off (P.T.O.) drive clutch hub and an idler gear mounted on the rear of the transmission.

Charge and Steering Pumps

The steering pump is mounted behind the charge pump and driven by a drive link directly connecting the two pumps.

The charge pump supplies oil to the variable displacement piston pump while the steering pump supplies oil to the hydrostatic steering system and transmission and P.T.O. lubrication circuit.

Oil for both the charge and steering pump circuits is drawn from the rear axle centre housing using two separate intake ports, the steering pump intake (1) and charge pump intake (2), Figure 25.

External pipework links the steering pump to the steering system.

NOTE: *The relief valve for the steering system is located within the steering motor.*

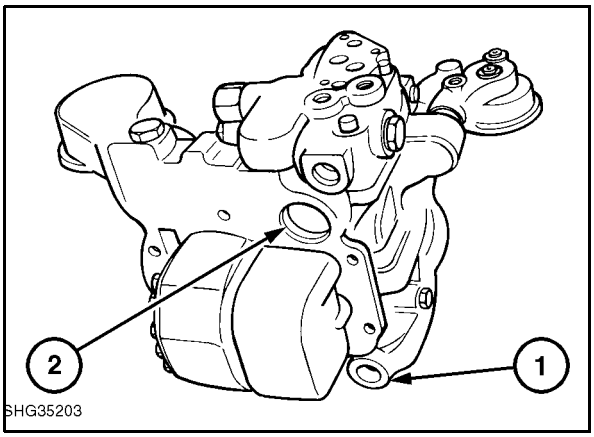

25

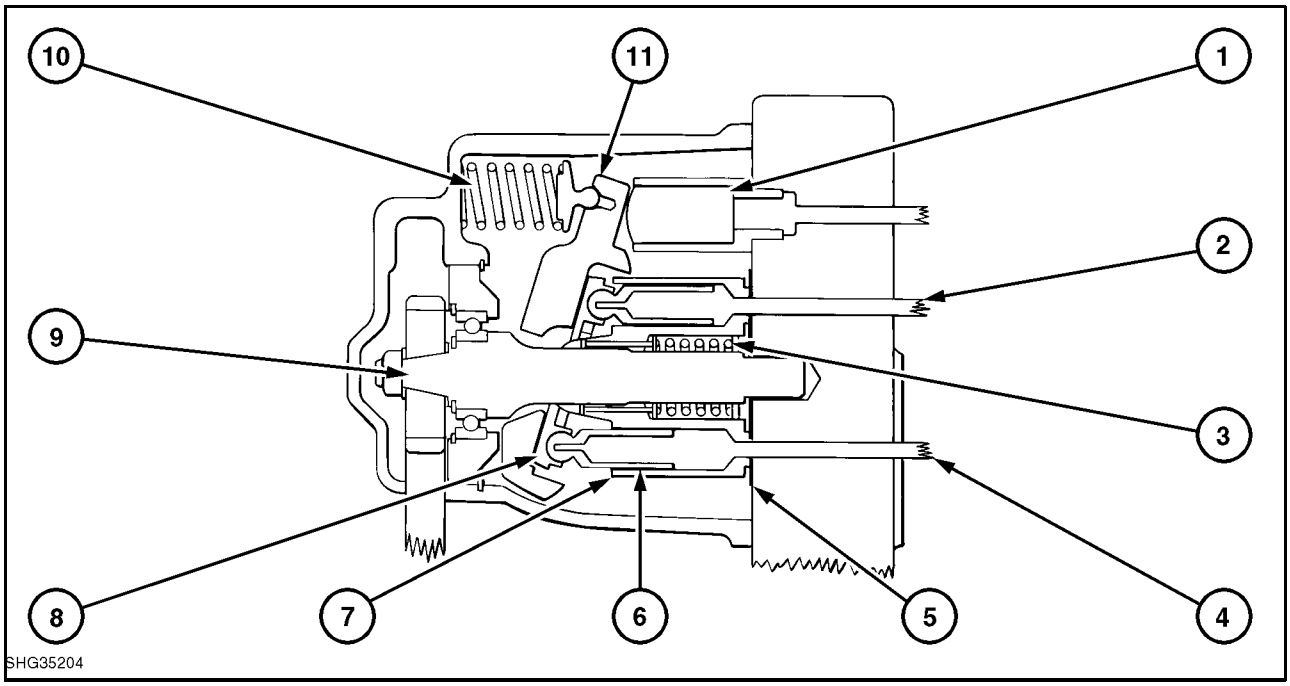

Variable Displacement Piston Pump-Sectional Drawing 26

1. Swash Plate Servo Piston
2. Outlet Pressure Port
3. Pump Head and Slipper Pre-load Spring
4. Inlet Port
5. Port Plate
6. Piston (9 off)
7. Pump Head
8. Slipper (9 off)
9. Driveshaft
10. Swash Plate Return Springs
11. Swash Plate

Variable Displacement Piston Pump

The variable displacement piston pump with closed centre load sensing consists of:-

1. A nine element pumping head.

2. A plate mechanism to adjust piston stroke and corresponding pump output. This plate will be referred to as a swash plate.

3. A load sensing valve which monitors the requirements of the hydraulic circuits and signals the pump to increase or decrease hydraulic oil flow accordingly.

A sectional drawing of the piston pump assembly is shown in Figure 26.

The nine element pumping head is cylindrical in shape and has nine barrels, into each of which, is installed a piston. On the end of each piston is pressed a slipper which always remains in contact with the face of the swash plate located at the front of the pumping head.

The drive shaft, which is driven by the pump drive gear, rotates the pumping head in a clockwise direction, viewed from the drive end of the pump.

As the pumping head rotates, the pistons move in and out of their barrels, following the contour of the swash plate. For every revolution of the drive shaft each piston completes one pumping cycle.

The swash plate, which does not rotate but pivots about the front of the pumping head, is the control mechanism that limits the stroke of each piston.

Situated between the rotating pumping head and the pump housing is a double kidney ported valve plate which allows each piston barrel to be filled with oil during the inlet stroke and to expel the oil on the exhaust or power stroke. The inlet port is forcibly fed with oil supplied by the charge pump and the exhaust port discharges oil to the hydraulic circuits.

As the pumping head rotates the barrel, each piston passes over the inlet and then the outlet ports of the pump. During the inlet cycle for each piston and barrel, oil is pumped into the barrel pushing the piston forward so that it always remains in contact with the swash plate. The stroke of each piston and volume of oil charged into its barrel is dependent on the angle of the swash plate.

After a piston and barrel has completed the inlet stroke, further rotation of the head aligns the barrel with the outlet port. Oil within the barrel is then forcibly ejected by the piston through the exhaust port to the hydraulic circuits.

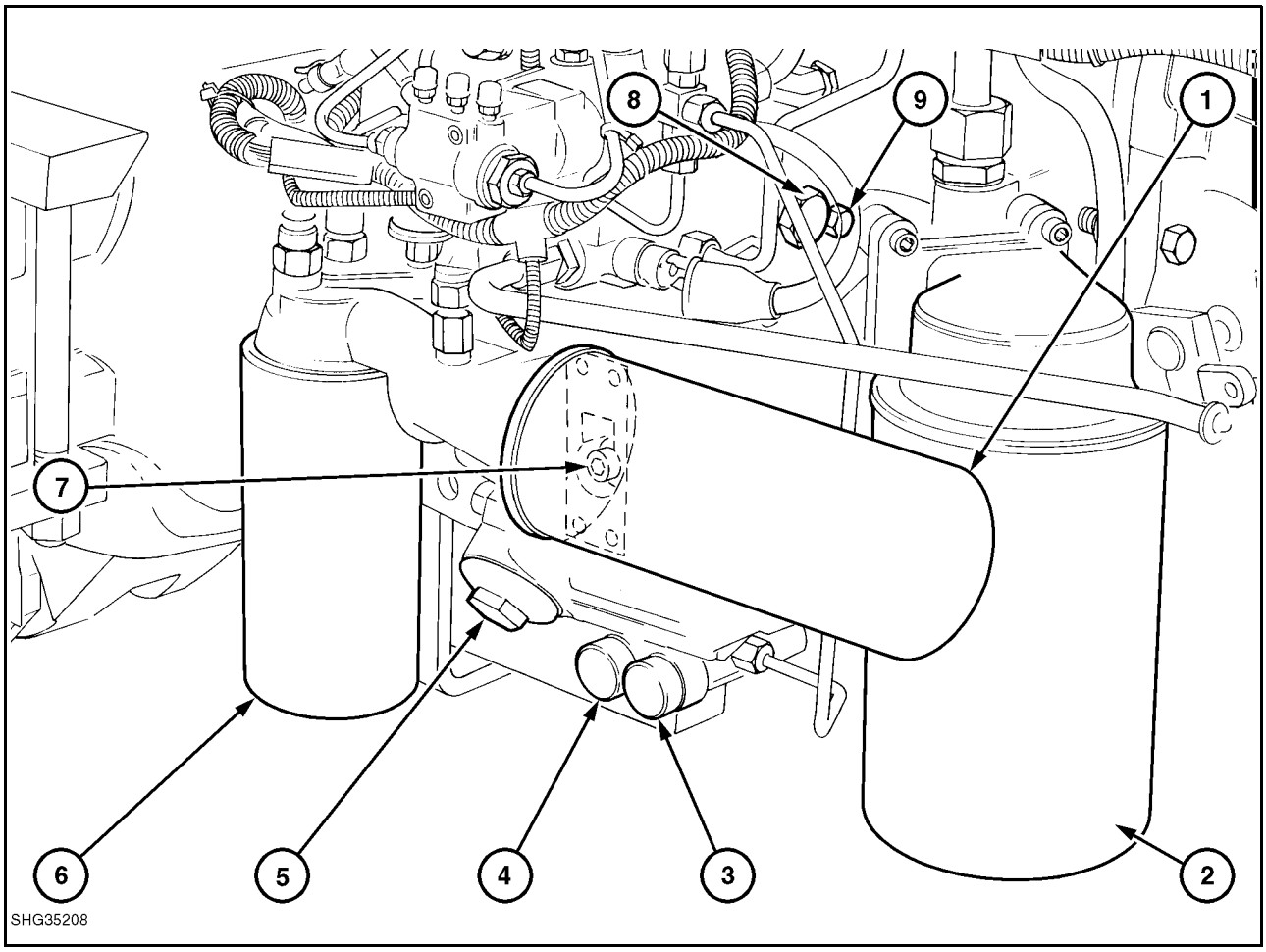

Hydraulic Pump Assembly-Filter and Valve Identification 27

1. Charge Pressure Filter
2. Charge Pump Inlet Filter
3. Flow Compensating Valve
4. Pressure Compensating Valve
5. Charge Pressure By-Pass Valve
6. Steering Pump Inlet Filter
7. Blocked charge Pressure Filter Dump Valve
8. Low Pressure Circuit Safety Valve
9. Pressure Regulating Valve

A comprehensive description and operation of the closed centre load sensing system, used to control the angle of the swash plate, is described later on in this Section using a series of hydraulic circuit diagrams.

These circuits are drawn depicting all the filters, valves and pumping elements used in the hydraulic system. To understand the circuits it is necessary to be aware of the location and principal function of each valve and filter within the pump assembly. Figure 27 illustrates the location of these items and is followed by a brief description of their principal function.

Flow Compensating Valve

The flow compensating valve controls operation of the swash plate in the variable displacement piston pump. This valve is the principal component of the load sensing system.

Pressure Compensating Valve

The pressure compensating valve works in conjunction with the flow compensating valve to restrict the maximum pressure in the variable displacement piston pump to 2700-2800 lbf/in^2 (186-193 bar).

Charge Pressure By-Pass Valve

Any excess oil supplied by the charge pump and not required by the variable displacement piston pump is returned to sump by the function of the charge pressure by-pass valve. This valve starts to operate when the pressure of oil delivered to the piston pump reaches 23 lbf/in^2 (1.6 bar). It should be noted that this is not the charge pressure but the pressure at which the by pass valve starts to 'bleed' the excess oil delivery to sump. The valve when fully open limits the charge pressure to a maximum of 50 lbf/in^2 (3.4 bar).

Charge Pressure Filter Dump Valve

The charge pressure filter dump valve is a safety relief valve for relieving excess pressure on the charge pump should the filter be restricted. This valve will begin to operate if the charge pressure exceeds 100 lbf/in^2 (7 bar).

Pressure Regulating Valve

The pressure regulating valve controls the maximum pressure of oil in the P.T.O., differential lock, four wheel drive disengagement system and transmission control circuits to 250-280 lbf/in^2 (17-19 bar) while at the same time directing high pressure system oil to the hydraulic power lift and remote valves. For detailed description and operation of this valve refer to the sub heading 'Operation of Pressure Regulating Valve' at the end of this Section.

Low Pressure Circuit Safety Valve

The low pressure circuit safety valve is a relief valve preventing pressure in the low pressure hydraulic circuit exceeding a maximum of 415 lbf/in^2 (28.6 bar).

This valve will only operate in the unlikely event that the pressure regulating valve fails to function correctly.

HYDRAULIC CIRCUIT OPERATION

The following hydraulic circuit diagrams in this Section are illustrated with the hydraulic lift assembly and lower link sensing electronic draft control system. The principal of operation of the variable displacement piston pump is, however, the same if a mechanical top link sensing hydraulic system is fitted as shown in Figure 33.

With reference to Figure 28.

The charge pressure pump draws oil through the charge pump inlet filter and passes it through the charge pressure filter. The oil then enters the variable displacement piston pump.

It should be noted that the inlet filter incorporates a by-pass valve, which is an integral part of the replaceable filter. It is, therefore, essential that the correct filter is installed at every filter change.

When the hydraulic lift and remote valves are not operating, demand by the hydraulic circuits is minimal and the only requirement of the pump is to supply oil at standby pressure, sufficient to operate the low pressure hydraulic system.

Because output of the variable displacement piston pump is always less than that of the charge pump delivery, excess oil flow supplied by the charge pump is returned to sump through the charge pressure by-pass valve.

If the charge pressure filter becomes restricted and the pressure on the inlet side of the filter reaches 100 lbf/in^2 (7 bar), the blocked filter dump valve will start to operate allowing oil to be returned directly to sump. If the charge pressure filter is fully restricted and 'full charge pump flow' has to pass over the dump valve, the pressure at the filter will be limited to a maximum of 180 lbf/in^2 (12.5 bar). provided the oil is at an operating temperature of 170°F (77°C).

Should the charge pressure at the inlet of the piston pump fall to 8-12 lbf//in^2 (0.55-0.82 bar), a warning light on the instrument panel will 'flash' indicating a low charge pressure.

The original equipment charge pressure filter contains a high performance synthetic media which results in high efficiency with low pressure drop to give maximum protection to the piston pump and hydraulic valves and to allow the required service life. It is, therefore, essential that the correct element is installed at every filter change and that the only the specific filter is used.

The steering pump similarly draws oil through an inlet filter which contains a by–pass valve which is an integral part of the replaceable filter. It is, therefore, essential that the correct filter is installed at every filter change. A dump valve, as used in the charge pump circuit is not, however, required as total output from the steering pump is directed to the steering system and transmission lubrication circuits. Should the steering filter become restricted and providing the oil temperature is above 40°C (104°F), a warning light on the instrument panel will be illuminated and a continuous audible alarm will sound.

For details of the steering and transmission lubrication circuits refer to the appropriate Steering and Transmission Sections of this Repair Manual.

Control of Variable Displacement Piston Pump when Generating Standby Pressure

With reference to Figure 28 and Figure 29.

Control of the swash plate, which regulates the output of the variable displacement piston pump, is achieved by the flow and pressure compensating valves located at the base of the pump.

When the engine is first started, the swash plate return spring positions the swash plate for maximum output of the pump, Figure 28. During engine start up, standby pressure has not yet been generated by the pump and the flow compensating valve spool is held to the left by spring pressure. The position of the spool prevents oil pressure generated by the pump, being applied through gallery **D** to the swash plate servo piston through gallery **C**. The swash plate consequently remains in the maximum flow position until the piston pump has developed standby pressure.

Figure 28
Control of Variable Displacement Piston Pump with CCLS when Generating Standby Pressure

1. Electronic Draft Control Valve
2. Load Sensing Line from Electronic Draft Control Valve (or Unload Valve if Tractor Fitted with Top Link Sensing)
3. Load Sensing Line from Remote Valves
4. Shuttle Valves
5. Flow Compensating Valve
6. Pressure Compensating Valve
7. Charge Pressure By–Pass Valve
8. Charge Pressure Filter
9. Charge Pressure Filter Dump Valve
10. Low Charge Pressure Switch
11. Oil Supply to Power Steering Motor, Oil Cooler, Transmission and P.T.O. Lubrication Circuits
12. Steering Pump
13. High Oil Temperature Switch
14. Steering Pump Inlet Filter
15. Steering Filter Low Temperature Switch (Prevents Blocked Steering Filter Light Working when Oil Temperature Below 40°C, 104°F)
16. Blocked Steering Filter Vacuum Switch
17. Charge Pump Inlet Filter
18. Charge Pump
19. Pump Gear Drive Train
20. Variable Displacement Piston Pump
21. Trailer Brake Valve (where fitted)
22. Pressure Regulating Valve
23. Low Pressure Circuit Safety Valve
24. Low Transmission Oil Pressure Switch
25. Low Pressure Circuit Oil Supply to PTO, Differential Lock, Transmission Control Circuits and Four Wheel Drive
26. To Hydraulic Lift Cylinder
27. To Remote Valves
28. Load Sensing Line from Trailer Brake Valve

A Load Sensing Line from Hydraulic Lift, Trailer Brake and Remote Control Valve Circuits
B Return to Sump Gallery from Flow and Pressure Compensating Valves
C Gallery to Swash Plate Servo Piston from Flow and Pressure Compensating Valves
D System Pressure Sensing Gallery to Flow and Pressure Compensating Valves

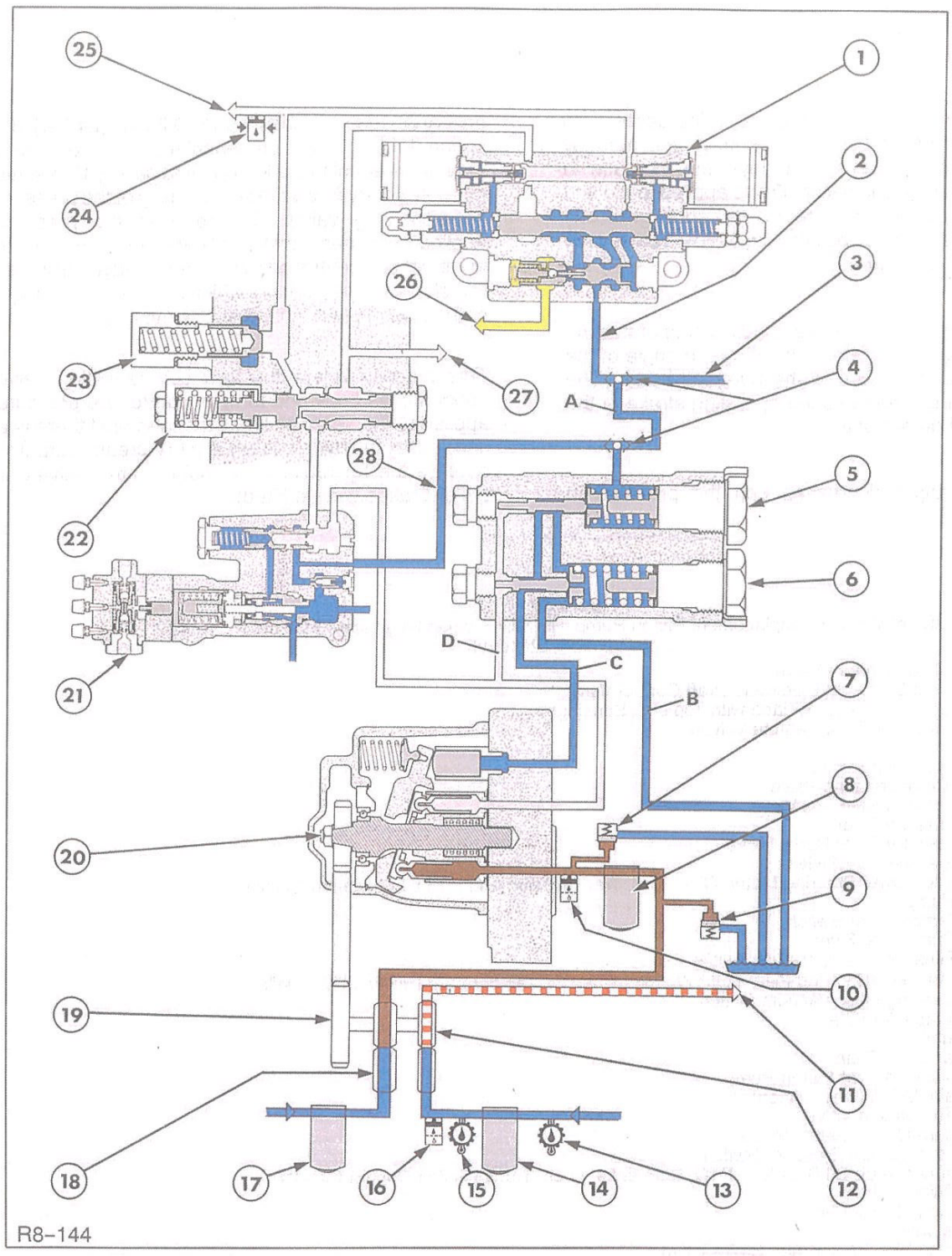

Control of Variable Displacement Piston Pump with CCLS when Generating Standby Pressure 28

Steering System Oil

Standby Pressure Oil @ Less Than 250 lbf/in^2 (17 bar)

Charge Pressure Oil @ 23–50 lbf/in^2 (1.6–3.4 bar)

Suction, Return to Reservoir and Zero Pressure Oil

Trapped Oil

As pump output pressure increases to 310–350 lbf/in^2 (21–24 bar), known as standby pressure (low pressure standby), the increase in pressure is sensed in gallery **D** and applied to the end of the flow compensator spool. The spool gradually moves against the spring allowing oil flow from gallery **D** to gallery **C**, Figure 29.

The controlled pressure rise in gallery **C** operates the swash plate servo piston, changing the angle of the swash plate in relation to the pumping head. The change in angle reduces the operating stroke of the pistons and output of the pump.

As pump output decreases and the pressure in gallery **D** reduces to less than 350 lbf/in^2 (24 bar), the spring in the flow compensating valve gradually moves the spool to the left opening gallery **C** to sump through gallery **B**, via the spring cavity of the pressure compensating valve. This reduces the pressure applied to the servo piston, allowing the servo piston to retract at a controlled rate under pressure from the swash plate return spring, which re–adjusts the angle of the swash plate to increase pump output.

This process where the flow compensating valve spool moves back and forth to control the pressure applied to the servo piston, continues until there is a demand by the hydraulic system to increase output to operate the hydraulic lift, remote control valves or trailer brakes (where fitted).

Figure 29
Control of Variable Displacement Piston Pump with CCLS when Regulating Standby Pressure (Low Pressure Standby)

1. Electronic Draft Control Valve
2. Load Sensing Line from Electronic Draft Control Valve (or Unload Valve if Tractor Fitted with Top Link Sensing)
3. Load Sensing Line from Remote Valves
4. Shuttle Valves
5. Flow Compensating Valve
6. Pressure Compensating Valve
7. Charge Pressure By–Pass Valve
8. Charge Pressure Filter
9. Charge Pressure Filter Dump Valve
10. Low Charge Pressure Switch
11. Oil Supply to Power Steering Motor, Oil Cooler, Transmission and P.T.O. Lubrication Circuits
12. Steering Pump
13. High Oil Temperature Switch
14. Steering Pump Inlet Filter
15. Steering Filter Low Temperature Switch (Prevents Blocked Steering Filter Light Working when Oil Temperature Below 40°C, 104°F)
16. Blocked Steering Filter Vacuum Switch
17. Charge Pump Inlet Filter
18. Charge Pump
19. Pump Gear Drive Train
20. Variable Displacement Piston Pump
21. Trailer Brake Valve (where fitted)
22. Pressure Regulating Valve
23. Low Pressure Circuit Safety Valve
24. Low Transmission Oil Pressure Switch
25. Low Pressure Circuit Oil Supply to PTO, Differential Lock, Transmission Control Circuits and Four Wheel Drive
26. To Hydraulic Lift Cylinder
27. To Remote Valves
28. Load Sensing Line from Trailer Brake Valve

A Load Sensing Line from Hydraulic Lift, Trailer Brake and Remote Control Valve Circuits
B Return to Sump Gallery from Flow and Pressure Compensating Valves
C Gallery to Swash Plate Servo Piston from Flow and Pressure Compensating Valves
D System Pressure Sensing Gallery to Flow and Pressure Compensating Valves

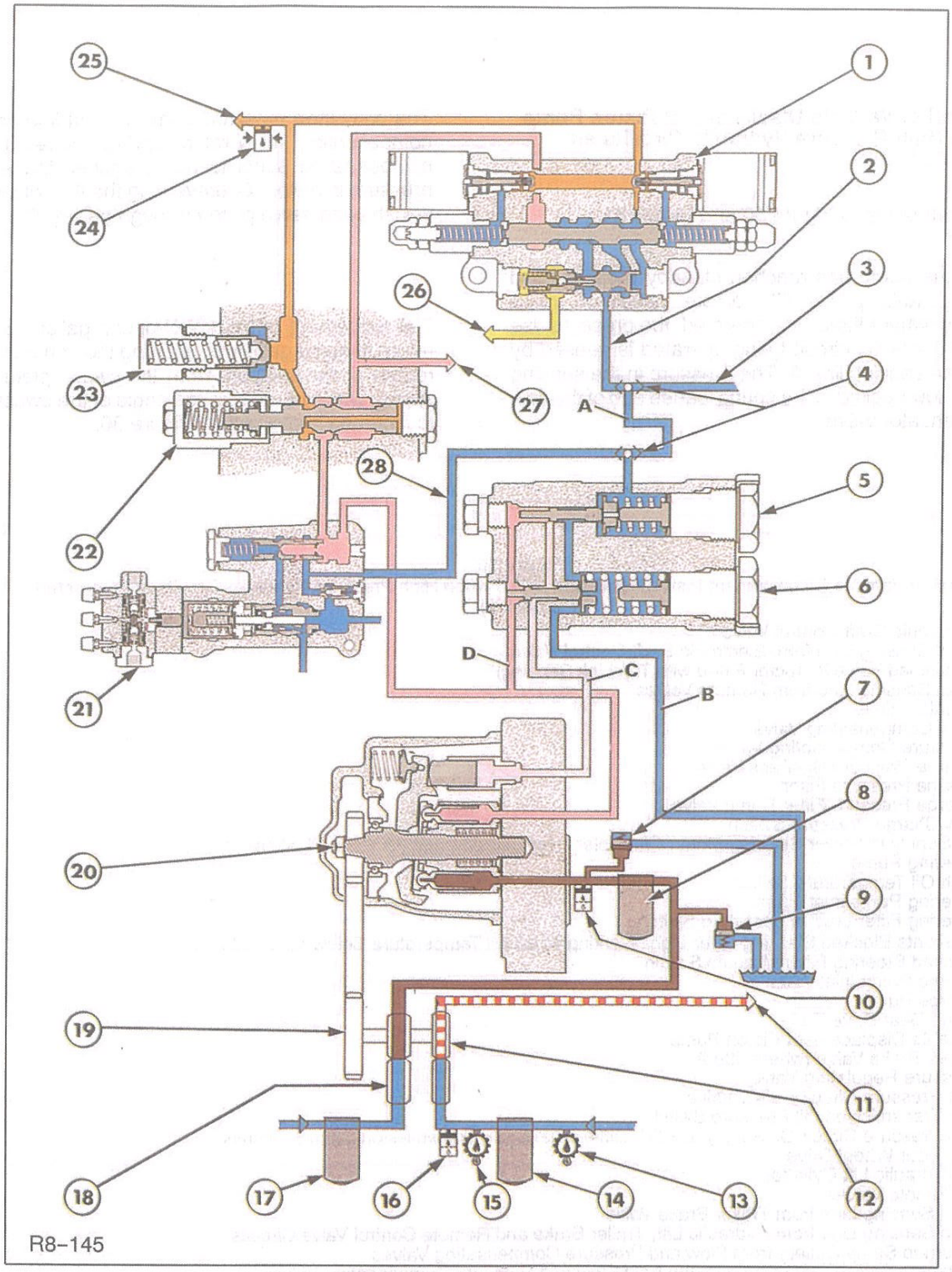

Control of Variable Displacement Piston Pump with CCLS when Regulating Standby Pressure (Low Pressure Standby) 29

Steering System Oil

Standby Pressure Oil @ 310–350 lbf/in^2 (21–24 bar)

Low Pressure Circuit Oil @ 250–280 lbf/in^2 (17–19 bar)

Charge Pressure Oil @ 23–50 lbf/in^2 (1.6–3.4 bar)

Suction/Return to Reservoir Oil

Trapped Oil

Control Pressure Oil

Control of Variable Displacement Piston Pump when High Pressure Hydraulic Circuits are Operated

With reference to Figure 30 and Figure 31.

After the pump has reached standby pressure and the hydraulic power lift, remote valves or trailer brakes (where fitted) are operated, the pressure rise in the hydraulic circuit being operated is sensed by the load sensing line **A**. The pressure in the sensing line is now applied to the spring loaded end of the flow compensator valve.

The combined pressure from the pilot line and flow compensating valve return spring causes the flow compensating spool to move against the standby pressure in gallery **D**, preventing the flow of oil to the swash plate servo piston through gallery **C**.

The movement of the spool opens gallery **C** to the return to sump gallery **B**, allowing the servo piston to retract under pressure from the swash plate return spring, which re-adjusts the angle of the swash plate to increase pump output, Figure 30.

Figure 30
Control of Variable Displacement Piston Pump with CCLS when High Pressure Hydraulic Circuits are Operated (Fast Lift)

1. Electronic Draft Control Valve
2. Load Sensing Line from Electronic Draft Control Valve (or Unload Valve if Tractor Fitted with Top Link Sensing)
3. Load Sensing Line from Remote Valves
4. Shuttle Valves
5. Flow Compensating Valve
6. Pressure Compensating Valve
7. Charge Pressure By-Pass Valve
8. Charge Pressure Filter
9. Charge Pressure Filter Dump Valve
10. Low Charge Pressure Switch
11. Oil Supply to Power Steering Motor, Oil Cooler, Transmission and P.T.O. Lubrication Circuits
12. Steering Pump
13. High Oil Temperature Switch
14. Steering Pump Inlet Filter
15. Steering Filter Low Temperature Switch (Prevents Blocked Steering Filter Light Working when Oil Temperature Below 40°C, 104°F)
16. Blocked Steering Filter Vacuum Switch
17. Charge Pump Inlet Filter
18. Charge Pump
19. Pump Gear Drive Train
20. Variable Displacement Piston Pump
21. Trailer Brake Valve (where fitted)
22. Pressure Regulating Valve
23. Low Pressure Circuit Safety Valve
24. Low Transmission Oil Pressure Switch
25. Low Pressure Circuit Oil Supply to PTO, Differential Lock, Transmission Control Circuits and Four Wheel Drive
26. To Hydraulic Lift Cylinder
27. To Remote Valves
28. Load Sensing Line from Trailer Brake Valve

A Load Sensing Line from Hydraulic Lift, Trailer Brake and Remote Control Valve Circuits
B Return to Sump Gallery from Flow and Pressure Compensating Valves
C Gallery to Swash Plate Servo Piston from Flow and Pressure Compensating Valves
D System Pressure Sensing Gallery to Flow and Pressure Compensating Valves

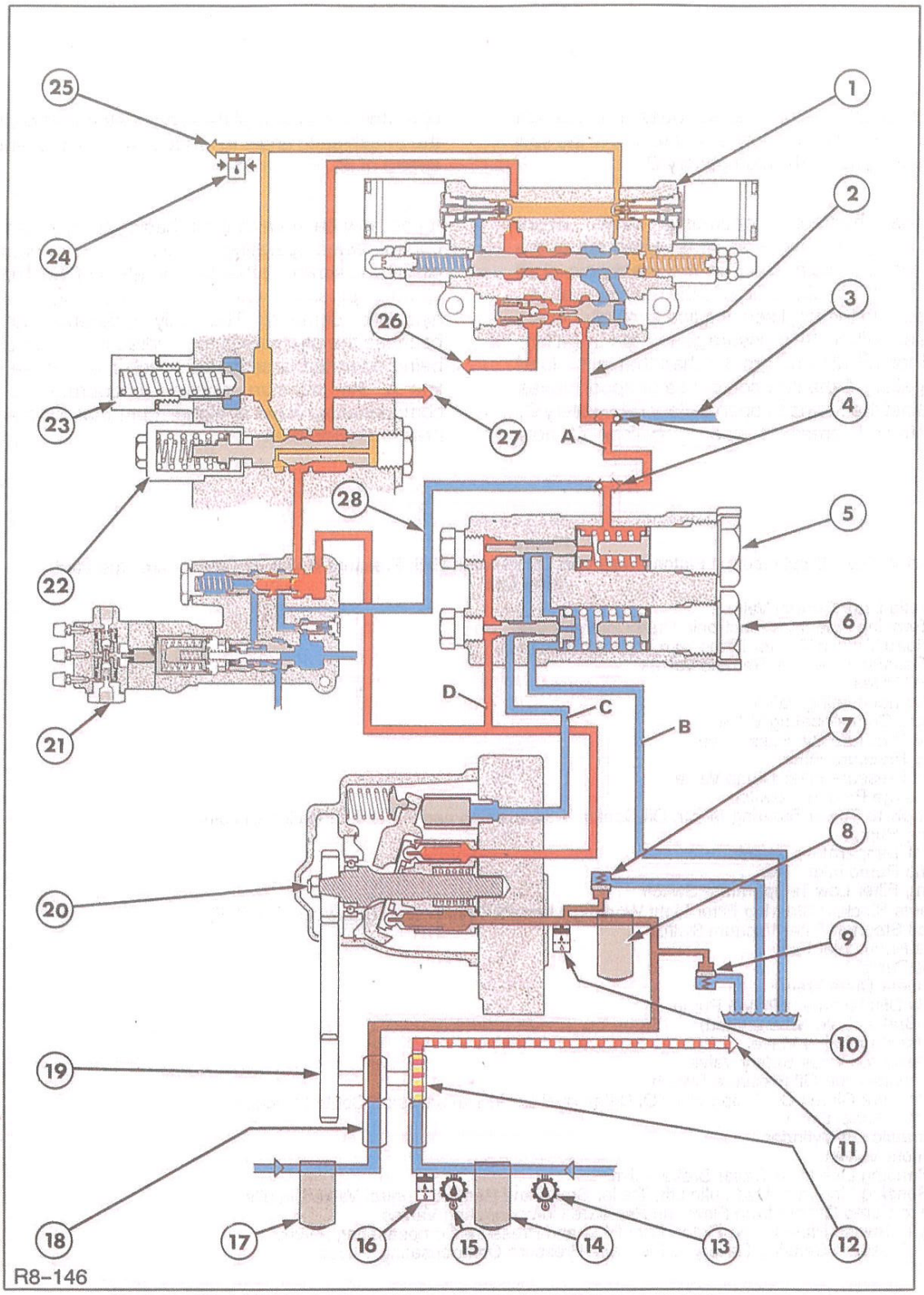

Control of Variable Displacement Piston Pump with CCLS when High Pressure Hydraulic Circuits are Operated (Fast Lift) 30

Steering System Oil

Low Pressure Circuit Oil @ 250–280 lbf/in^2 (17–19 bar)

System Pressure Oil

Charge Pressure Oil @ 23–50 lbf/in^2 (1.6–3.4 bar)

Suction/Return to Reservoir Oil

As pump output increases so does the system pressure generated and applied to the end of the flow compensating spool through gallery **D**.

When the hydraulic operating cycle nears completion, eg. the hydraulic lift is raised out of the ground and the main spool in the electronic draft control valve gradually returns to the neutral position, the pressure in the load sensing line similarly begins to decrease. When the pressure generated in gallery **D** is 300 lbf/in^2 (21 bar) greater than that in the load sensing gallery **A** the flow compensator spool moves back against the spring to open gallery **D** to gallery **C**. The controlled pressure rise in gallery **C** now operates the swash plate servo piston and changes the swash plate angle to reduce pump output and the speed of lift, Figure 31.

It can now be seen that the basic principle of pump control, when operating the hydraulic high pressure circuits, is similar to that for operation of the pump at standby pressure when there is no high pressure hydraulic demand. The only difference is that because the pressure in the hydraulic system circuit being operated is sensed through the load sensing line **A**, the pressure required to operate the flow compensating valve is higher than that for standby pressure operation.

Figure 31
Control of Variable Displacement Piston Pump with CCLS when High Pressure Hydraulic Circuits are Operated (Slow Lift)

1. Electronic Draft Control Valve
2. Load Sensing Line from Electronic Draft Control Valve (or Unload Valve if Tractor Fitted with Top Link Sensing)
3. Load Sensing Line from Remote Valves
4. Shuttle Valves
5. Flow Compensating Valve
6. Pressure Compensating Valve
7. Charge Pressure By–Pass Valve
8. Charge Pressure Filter
9. Charge Pressure Filter Dump Valve
10. Low Charge Pressure Switch
11. Oil Supply to Power Steering Motor, Oil Cooler, Transmission and P.T.O. Lubrication Circuits
12. Steering Pump
13. High Oil Temperature Switch
14. Steering Pump Inlet Filter
15. Steering Filter Low Temperature Switch (Prevents Blocked Steering Filter Light Working when Oil Temperature Below 40°C, 104°F)
16. Blocked Steering Filter Vacuum Switch
17. Charge Pump Inlet Filter
18. Charge Pump
19. Pump Gear Drive Train
20. Variable Displacement Piston Pump
21. Trailer Brake Valve (where fitted)
22. Pressure Regulating Valve
23. Low Pressure Circuit Safety Valve
24. Low Transmission Oil Pressure Switch
25. Low Pressure Circuit Oil Supply to PTO, Differential Lock, Transmission Control Circuits and Four Wheel Drive
26. To Hydraulic Lift Cylinder
27. To Remote Valves
28. Load Sensing Line from Trailer Brake Valve

A Load Sensing Line from Hydraulic Lift, Trailer Brake and Remote Control Valve Circuits
B Return to Sump Gallery from Flow and Pressure Compensating Valves
C Gallery to Swash Plate Servo Piston from Flow and Pressure Compensating Valves
D System Pressure Sensing Gallery to Flow and Pressure Compensating Valves

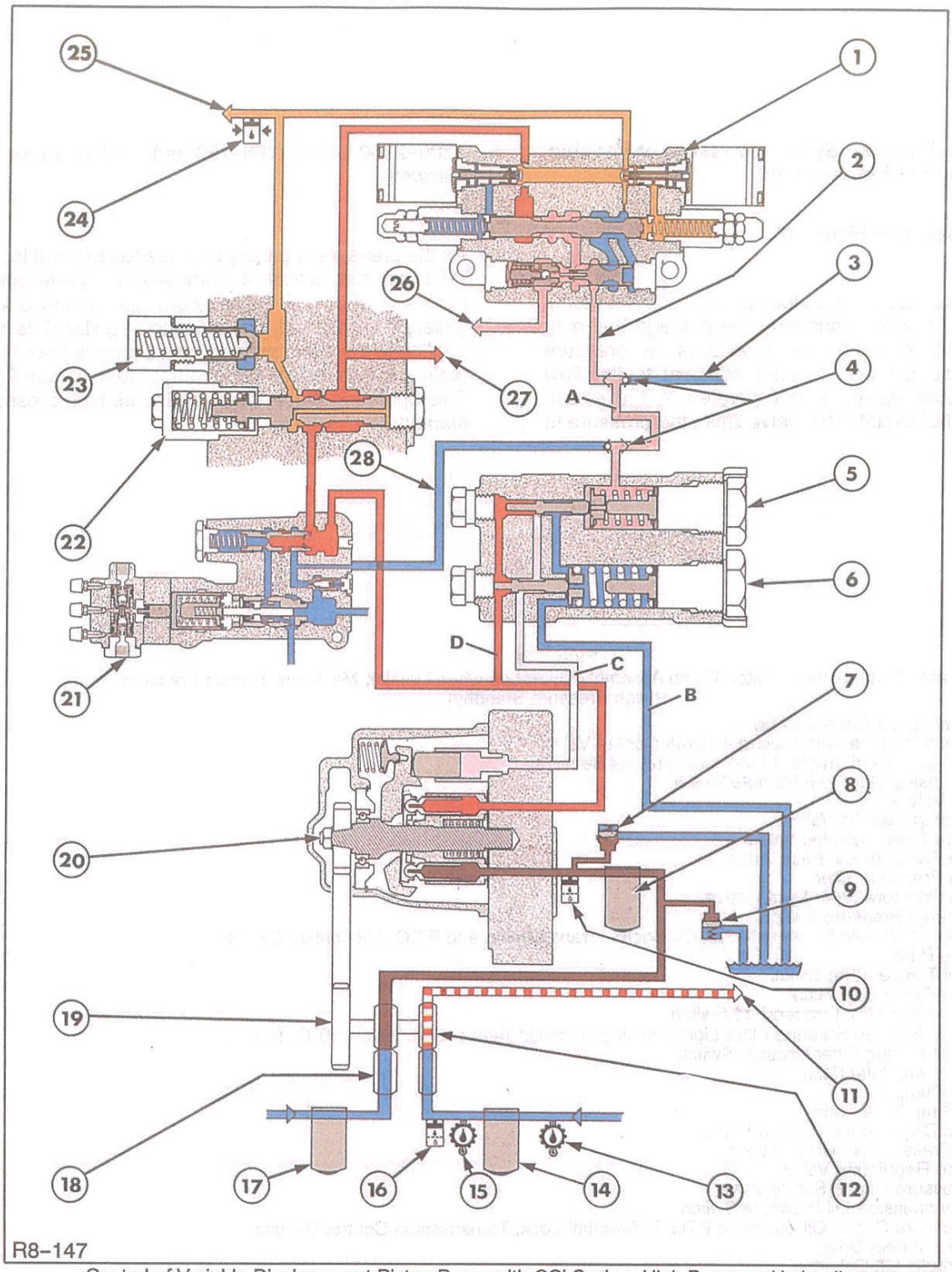

Control of Variable Displacement Piston Pump with CCLS when High Pressure Hydraulic Circuits are Operated (Slow Lift) 31

Steering System Oil

System Pressure Oil

Control Pressure Oil

Charge Pressure Oil @ 23–50 lbf/in^2 (1.6–3.4 bar)

Suction/Return to Reservoir Oil

Low Pressure Circuit Oil @ 250–280 lbf/in^2 (17–19 bar)

Limiting Maximum System Pressure of Variable Displacement Piston Pump

With reference to Figure 32.

To limit the maximum output pressure of the piston pump and prevent consequential damage that may occur due to excessive pressures, a pressure compensating valve, located adjacent to the flow compensator valve, is incorporated in the swash plate control circuit. This valve limits the pressure to 2700–2800 lbf/in^2 (186–193 bar) and operates as follows:–

As the pressure in gallery **D** increases to 2800 lbf/in^2 (193 bar) the pressure compensator valve spool moves against the valve return spring and opens gallery **D** to gallery **C**. The pressure in gallery **D** is now applied to the servo piston which changes the swash plate angle to reduce pump output to minimum flow. This operating mode is referred to as high pressure standby.

Figure 32
Variable Displacement Piston Pump Assembly Operation when Limiting Maximum System Pressure (High Pressure Standby)

1. Electronic Draft Control Valve
2. Load Sensing Line from Electronic Draft Control Valve (or Unload Valve if Tractor Fitted with Top Link Sensing)
3. Load Sensing Line from Remote Valves
4. Shuttle Valves
5. Flow Compensating Valve
6. Pressure Compensating Valve
7. Charge Pressure By–Pass Valve
8. Charge Pressure Filter
9. Charge Pressure Filter Dump Valve
10. Low Charge Pressure Switch
11. Oil Supply to Power Steering Motor, Oil Cooler, Transmission and P.T.O. Lubrication Circuits
12. Steering Pump
13. High Oil Temperature Switch
14. Steering Pump Inlet Filter
15. Steering Filter Low Temperature Switch (Prevents Blocked Steering Filter Light Working when Oil Temperature Below 40°C, 104°F)
16. Blocked Steering Filter Vacuum Switch
17. Charge Pump Inlet Filter
18. Charge Pump
19. Pump Gear Drive Train
20. Variable Displacement Piston Pump
21. Trailer Brake Valve (where fitted)
22. Pressure Regulating Valve
23. Low Pressure Circuit Safety Valve
24. Low Transmission Oil Pressure Switch
25. Low Pressure Circuit Oil Supply to PTO, Differential Lock, Transmission Control Circuits and Four Wheel Drive
26. To Hydraulic Lift Cylinder
27. To Remote Valves
28. Load Sensing Line from Trailer Brake Valve

A Load Sensing Line from Hydraulic Lift, Trailer Brake and Remote Control Valve Circuits
B Return to Sump Gallery from Flow and Pressure Compensating Valves
C Gallery to Swash Plate Servo Piston from Flow and Pressure Compensating Valves
D System Pressure Sensing Gallery to Flow and Pressure Compensating Valves

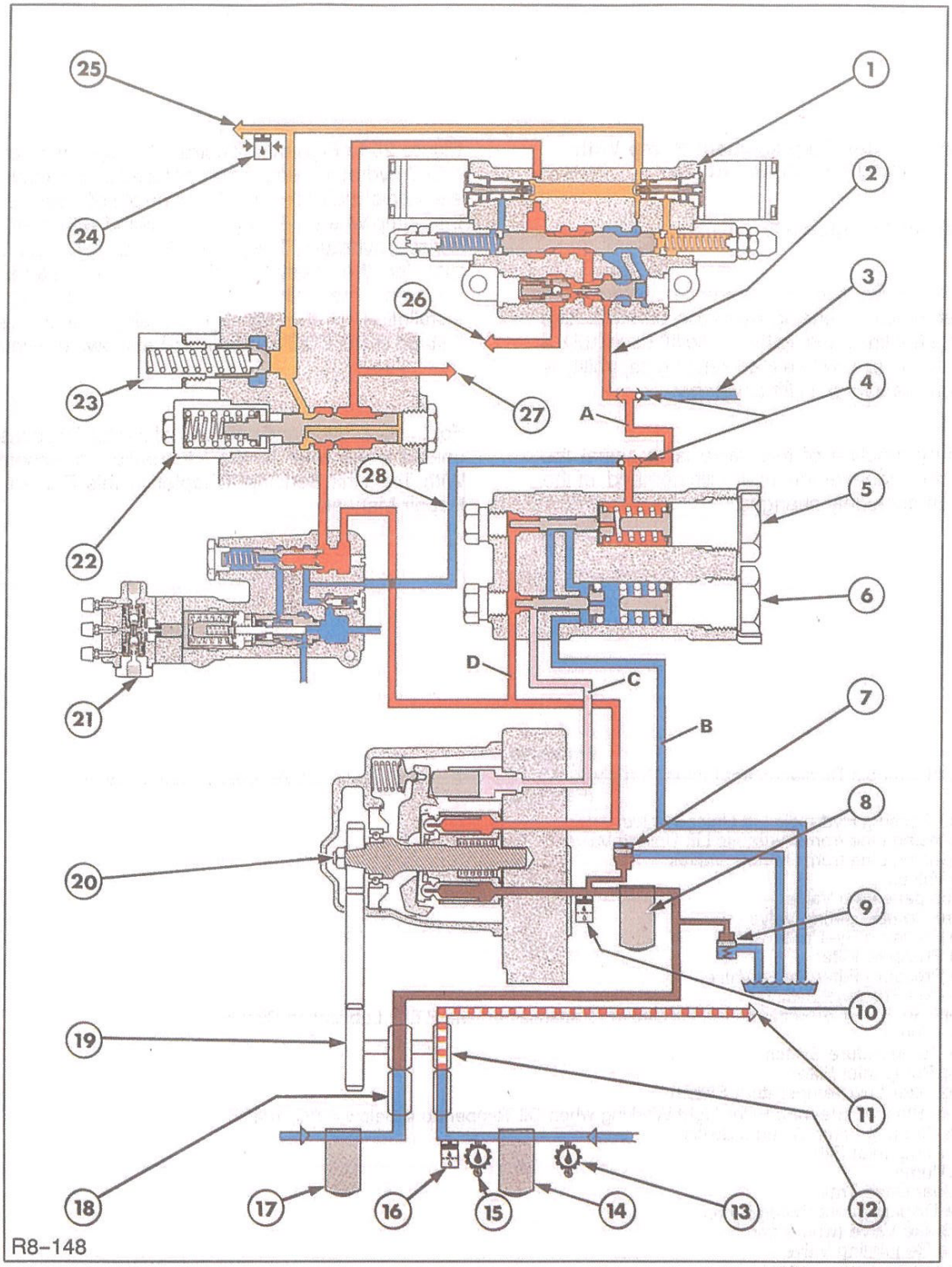

Variable Displacement Piston Pump Assembly Operation when Limiting Maximum System Pressure (High Pressure Standby) 32

- Steering System Oil
- System Pressure Oil @ 2800 lbf/in^2 (193 bar)
- Control Pressure Oil
- Charge Pressure Oil @ 23–50 lbf/in^2 (1.6–3.4 bar)
- Suction/Return to Reservoir Oil
- Low Pressure Circuit Oil @ 250–280 lbf/in^2 (17–19 bar)

Control of Variable Displacement Pump With Top Link Sensing Hydraulic Lift

With reference to Figure 33.

When a tractor installed with a variable displacement closed centre load sensing hydraulic pump is also fitted with a top link sensing hydraulic lift assembly, a special unload valve with a load sensing capability is installed on the hydraulic lift assembly.

This primary function of this valve is to signal the CCLS pump whenever the hydraulic demand of the hydraulic lift assembly changes.

Figure 28 to Figure 32 illustrate the operation of the CCLS hydraulic pump when installed on a tractor with electronic draft control. The principle of operation of the pump when the tractor is installed with a top link sensing hydraulic lift assembly is exactly the same as that for the electronic draft control system. To illustrate the similarity Figure 33 shows the installation of the top link sensing unload valve instead of the EDC hydraulic valve shown previously.

For the operation and overhaul of the top link sensing unload valve refer to the 'Hydraulic Lift Assembly With Top Link Sensing' Chapter in this Part of the Repair Manual.

Figure 33
Control of Variable Displacement Piston Pump with Top Link Sensing Hydraulic Lift Assembly Unload Valve (Fast Lift)

1. Top Link Sensing Hydraulic Lift Unload Valve
2. Load Sensing Line from Hydraulic Lift Unload Valve
3. Load Sensing Line from Remote Valves
4. Shuttle Valves
5. Flow Compensating Valve
6. Pressure Compensating Valve
7. Charge Pressure By–Pass Valve
8. Charge Pressure Filter
9. Charge Pressure Filter Dump Valve
10. Low Charge Pressure Switch
11. Oil Supply to Power Steering Motor, Oil Cooler, Transmission and P.T.O. Lubrication Circuits
12. Steering Pump
13. High Oil Temperature Switch
14. Steering Pump Inlet Filter
15. Steering Filter Low Temperature Switch
    (Prevents Blocked Steering Filter Light Working when Oil Temperature Below 40°C, 104°F)
16. Blocked Steering Filter Vacuum Switch
17. Charge Pump Inlet Filter
18. Charge Pump
19. Pump Gear Drive Train
20. Variable Displacement Piston Pump
21. Trailer Brake Valve (where fitted)
22. Pressure Regulating Valve
23. Low Pressure Circuit Safety Valve
24. Low Transmission Oil Pressure Switch
25. Low Pressure Circuit Oil Supply to PTO, Differential Lock, Transmission Control Circuits and Four Wheel Drive
26. To Hydraulic Lift Cylinder
27. To Remote Valves
28. Load Sensing Line from Trailer Brake Valve

A Load Sensing Line from Hydraulic Lift, Trailer Brake and Remote Control Valve Circuits
B Return to Sump Gallery from Flow and Pressure Compensating Valves
C Gallery to Swash Plate Servo Piston from Flow and Pressure Compensating Valves
D System Pressure Sensing Gallery to flow and Pressure Compensating Valves

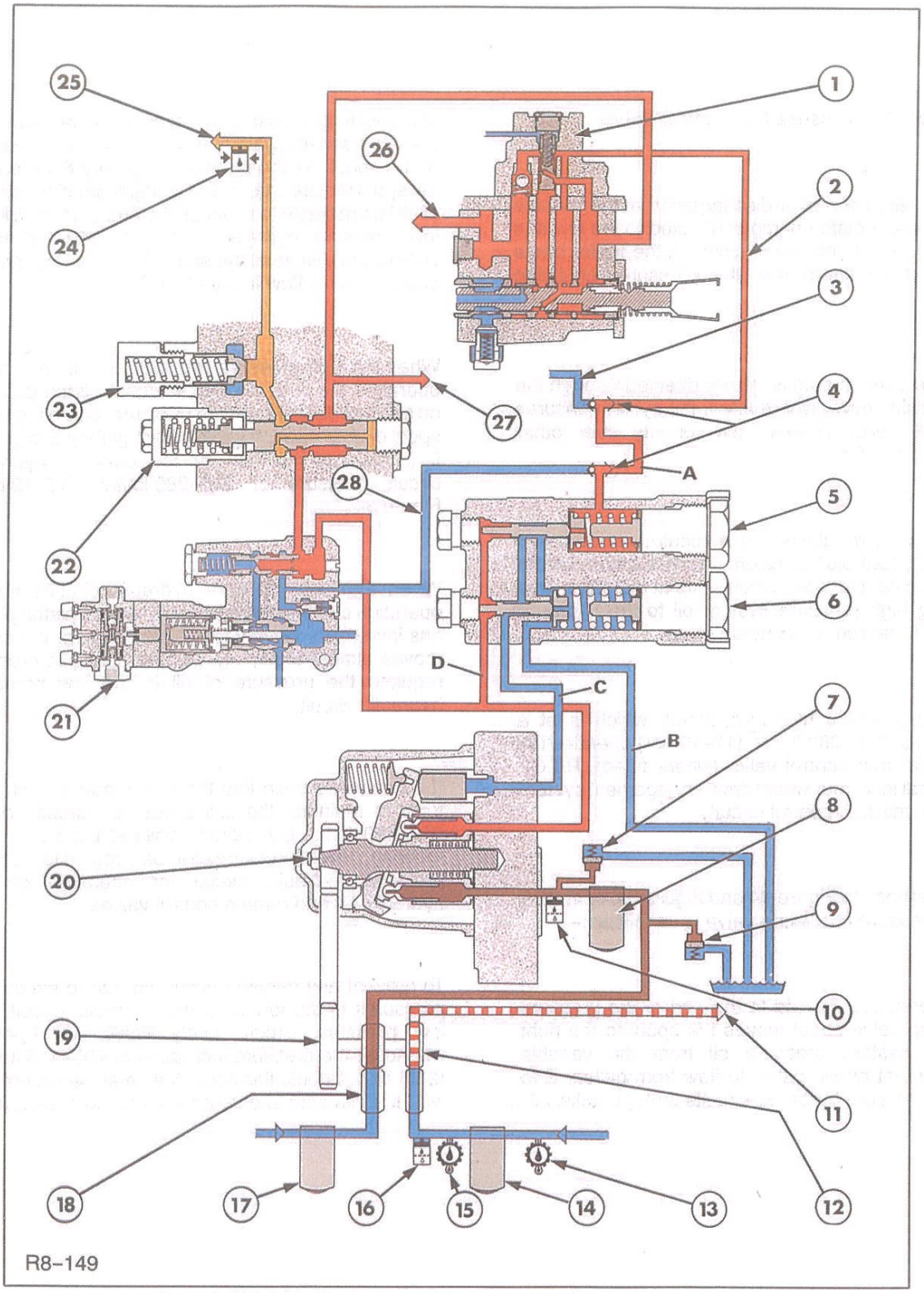

Control of Variable Displacement Piston Pump with Top Link Sensing Hydraulic Lift Assembly Unload Valve (Fast Lift) 33

Steering System Oil

System Pressure Oil

Low Pressure Circuit Oil @ 250–280 lbf/in^2 (17–19 bar)

Charge Pressure Oil @ 23–50 lbf/in^2 (1.6–3.4 bar)

Suction/Return to Reservoir Oil

Operation Of Pressure Regulating Valve

The regulated flow of oil discharged from the variable displacement piston pump is directed to the low and high pressure hydraulic circuits via the trailer brake valve (where fitted) and the pressure regulating valve.

Because pump output is initially directed through the trailer brake valve, where fitted, the system ensures that the trailer brakes have priority over other hydraulic circuits.

The pressure regulating valve, located on the top of the pump, controls the maximum pressure of oil in the low pressure hydraulic circuit while at the same time directing high pressure system oil to the hydraulic power lift and remote control valves.

The low pressure hydraulic circuit, which is at a pressure of 250–280 lbf/in^2 (17–19 bar) operates the electronic draft control valve (where fitted), P.T.O., differential lock, four wheel drive engagement system and transmission control circuits.

With reference to Figure 34 and Figure 35, operation of the pressure regulating valve is as follows:–

Spring pressure applied to the end of the pressure regulating valve spool moves the spool to the right allowing system pressure oil from the variable displacement piston pump to flow from gallery **E** to the low pressure hydraulic circuits through gallery **F**.

The resulting pressure in gallery **F** is sensed in the pressure sensing gallery **H** drilled through the centre of the spool. As the pressure in gallery **F** increases, the spool moves against the spring restricting the flow of oil into gallery **F** to maintain the pressure of oil in the low pressure hydraulic circuit at 250–280 lbf/in^2 (17–19 bar), while at the same time allowing system pressure oil to flow into gallery **G**.

When the high pressure hydraulic circuits are not in operation the variable displacement piston pump is on minimal delivery and the pressure regulating valve spool directs most of the flow from gallery **E** to gallery **F**, in order to maintain the low pressure hydraulic circuit pressure of 250–280 lbf/in^2 (17–19 bar), Figure 34.

When the high pressure hydraulic circuits are in operation and the variable displacement piston pump has increased delivery to satisfy demand, the spool moves almost totally against the spring in order to regulate the pressure of oil in the low pressure hydraulic circuit, .

It can now be seen that the spool moves back and forth to maintain the low pressure circuit oil at 250–280 lbf/in^2 (17–19 bar) while at the same time allowing system pressure oil to be directed to the high pressure hydraulic circuit for operation of the hydraulic lift and remote control valves.

To prevent any damage occurring due to excessive pressures in the low pressure hydraulic circuit, the low pressure circuit safety valve will operate whenever the pressure increases to 400–415 lbf/in^2 (28.6 bar). Should this occur the safety valve poppet will lift off its seat and vent the circuit to reservoir.

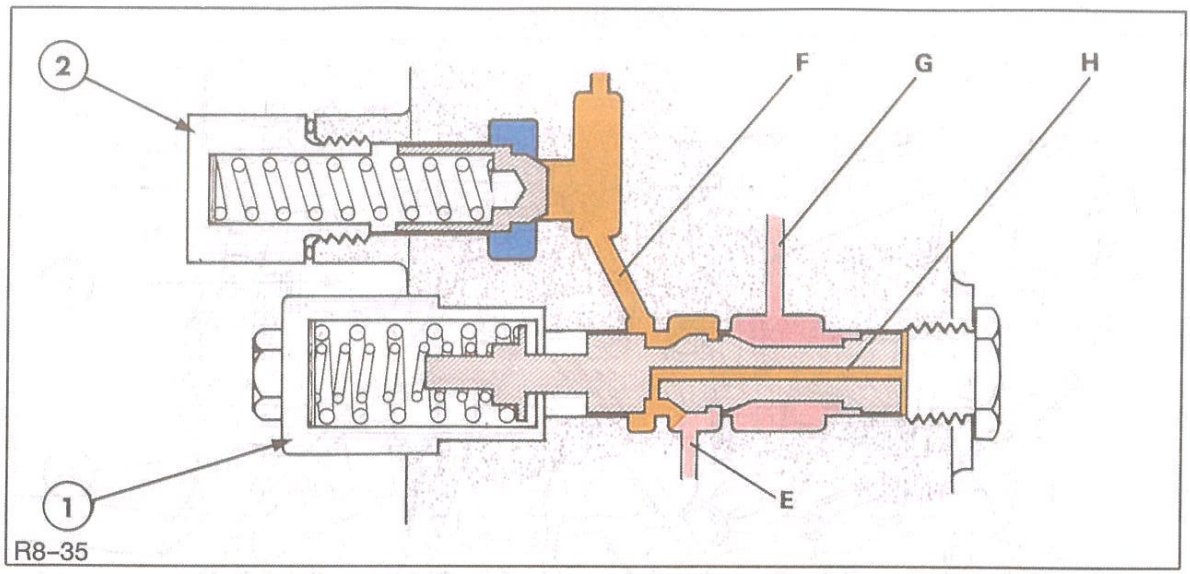

Pressure Regulating Valve and Low Pressure Circuit Safety Valve (Low Pressure Circuit Operation) 34

1. Pressure Regulating Valve
2. Low Pressure Circuit Safety Valve

E System Pressure Oil from Variable Displacement Piston Pump
F To Low Pressure Hydraulic Circuit
G To High Pressure Hydraulic Circuit
H Low Pressure Circuit Sensing Gallery

System Pressure Oil | Low Pressure Circuit Oil | Return to Reservoir

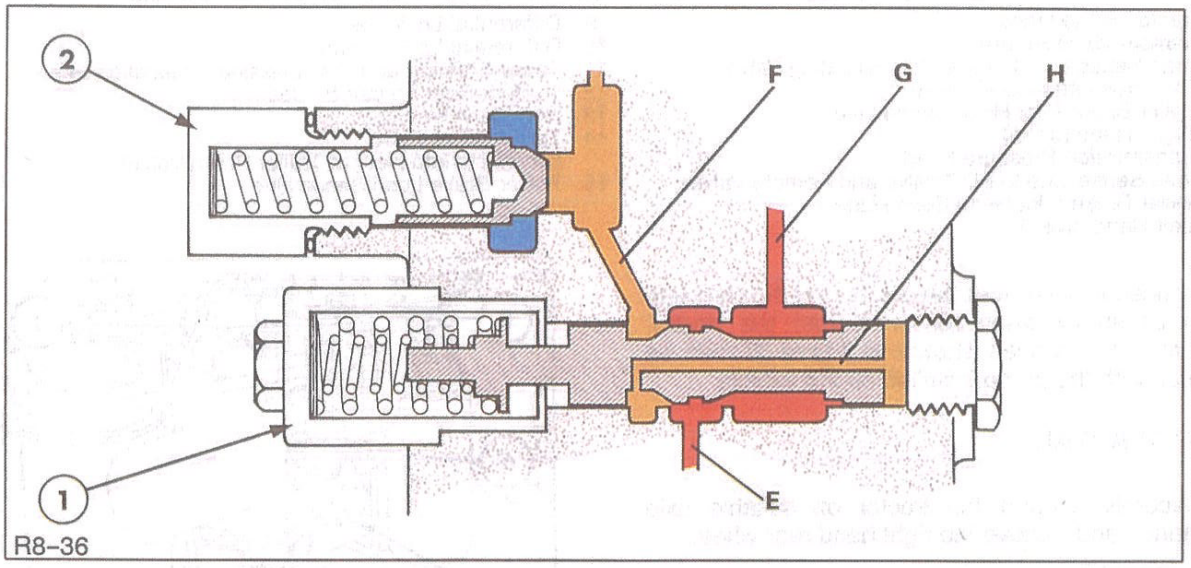

Pressure Regulating Valve and Low Pressure Circuit Safety Valve (Low and High Pressure Circuit Operation) 35

1. Pressure Regulating Valve
2. Low Pressure Circuit Safety Valve

E System Pressure Oil from Variable Displacement Pump
F To Low Pressure Hydraulic Circuit
G To High Pressure Hydraulic Circuit
H Low Pressure Circuit Sensing Gallery

System Pressure Oil | Low Pressure Circuit Oil | Return to Reservoir

OVERHAUL

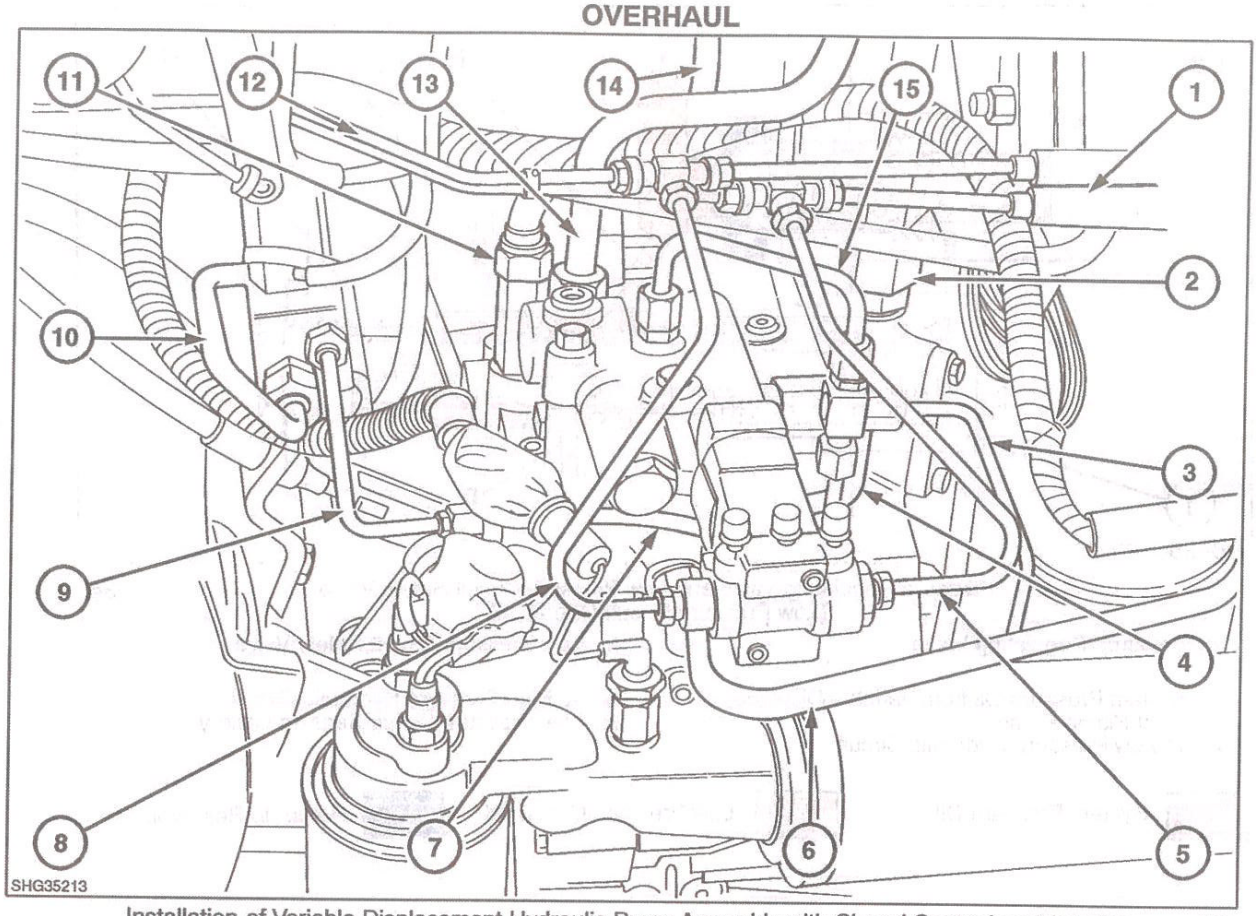

Installation of Variable Displacement Hydraulic Pump Assembly with Closed Centre Load Sensing 36

1. Tractor Brake Lines
2. Remote Valve Return
3. Load Sense Line to Flow Compensating Valve
4. Pilot Pressure to EDC Valve
5. Trailer Brake Pilot Head Sense Line (Right Hand Brake)
6. Transmission Pressure Feed
7. Load Sense Line to EDC Valve and Remote Valves
8. Trailer Brake Pilot Head Sense Line (Left Hand Brake)
9. Differential Lock Feed
10. Differential Lock Return
11. Power Steering and Transmission Lubrication Feed
12. To Rear Rear Tractor Brakes
13. Remote Valve Feed
14. Trailer Brake Feed (Connects Into Rear of Trailer Brake Valve)
15. Trailer Brake Load Sense Line

This procedure describes the overhaul of the complete pump assembly when removed from the tractor, however, the valves shown in Figure 37 can be serviced with the pump installed on the vehicle.

PUMP REMOVAL

1. Securely support the tractor on suitable axle stands and remove the right hand rear wheel.
2. Drain oil through rear axle.
3. Disconnect all electrical and hydraulic connections to pump. Refer to Figure 36.
4. Where fitted, remove trailer brake valve retaining bolts and separate valve from pump body. This will avoid the necessity to disconnect the tractor brake lines.

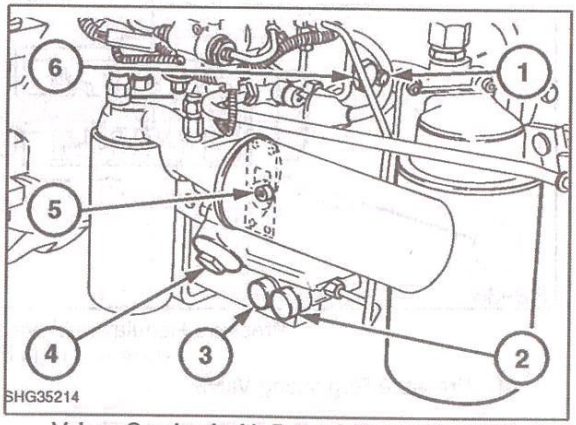

Valves Serviced with Pump Installed on Tractor 37

1. Pressure Regulating Valve
2. Flow Compensating Valve
3. Pressure Compensating Valve
4. Charge Pressure By–pass Valve
5. Charge Pressure Filter Dump Valve
6. Low Pressure Circuit Safety Valve

5. Remove hydraulic filters, support pump on suitable lift or trolley jack and remove from tractor, Figure 38.

WARNING: *The hydraulic pump is a heavy component and weighs 88 lbf (4o kgf). It is important that it is securely supported when being removed from the tractor.*

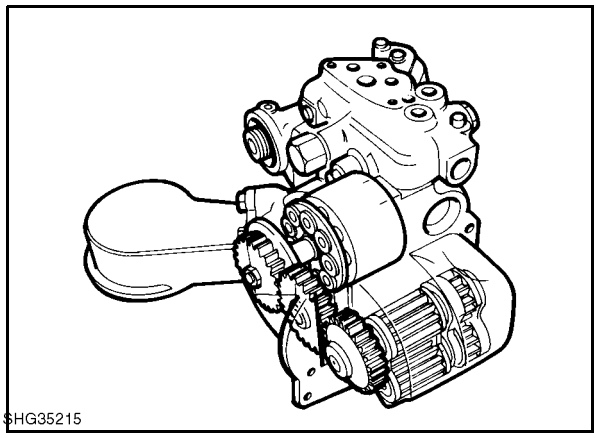

38

REMOVAL AND DISASSEMBLY OF VALVES

1. Where fitted, remove trailer brake valve. For overhaul of valve refer to trailer brake valve Section of the Repair Manual.

Charge Pressure By-pass Valve

1. Remove plug to expose charge pressure by-pass valve (1), Figure 39.

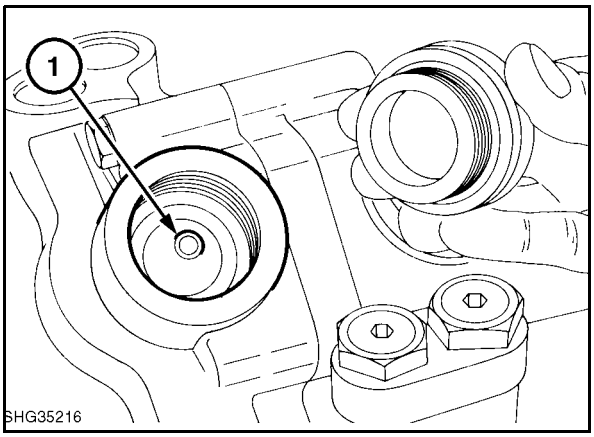

39

2. Use Tool No FNH00878 which engages in the peg locating holes of the valve, unscrew the charge pressure bypass valve from the pump body, Figure 40.

NOTE: *If during pressure testing the charge pressure reading was away from the specified value of 23-50 lbf/in^2 (1.6-3.4 bar) the bypass valve must be examined together with the charge pressure filter dump valve for faulty operation.* ***Do not*** *attempt to adjust the valve which is supplied as a pre-set assembly and should not be adjusted.*

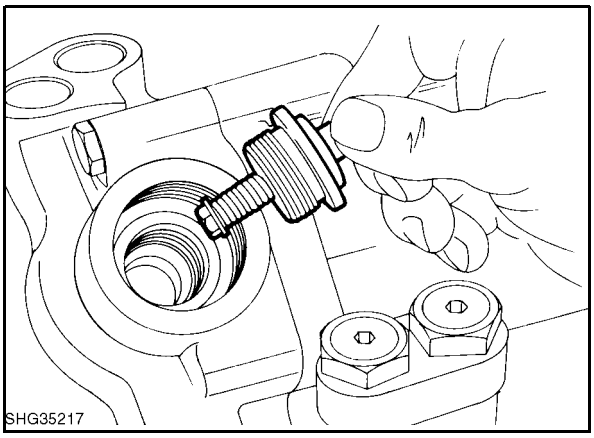

40

Pressure Regulating and Low Pressure Circuit Safety Valves

NOTE: *The pressure regulating and low pressure circuit safety valves are supplied as a pre-set assembly and should not be adjusted.*

1. Remove pressure regulating (1) and low pressure circuit safety valve (2), Figure 41.

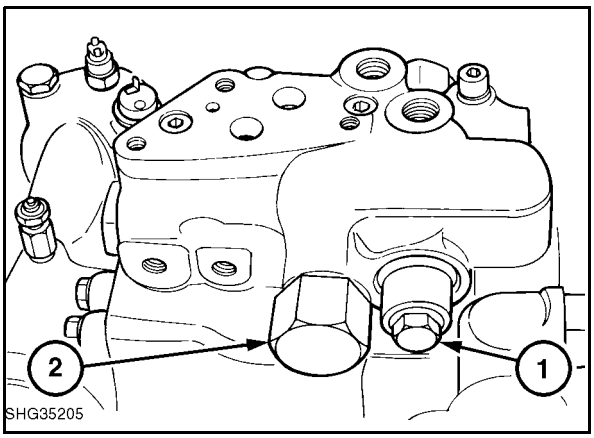

41

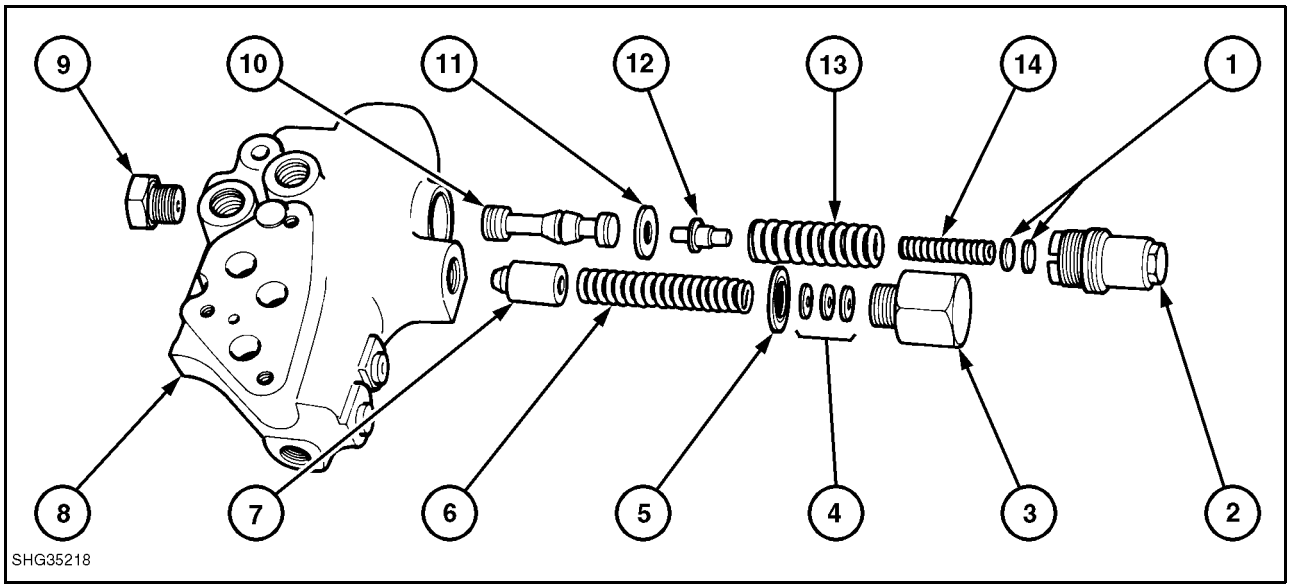

Pressure Regulating Valve and Low Pressure Circuit Safety Valve 42

1. Shims
2. Pressure Regulating Valve Cap
3. Low Pressure Circuit Safety Valve Cap
4. Shims
5. Dowty Seal
6. Spring
7. Poppet
8. Housing
9. Plug
10. Pressure Regulating Valve Spool
11. Stop (washer)
12. Spring Guide
13. Spring
14. Spring

2. Carefully remove pressure reducing and low pressure circuit safety valve caps which are under pressure from the springs within the valve. Remove the valve components, Figure 42.

3. Remove transfer tubes (1) and 'O' rings (2) from oil galleries connecting pump and valve housings, Figure 43.

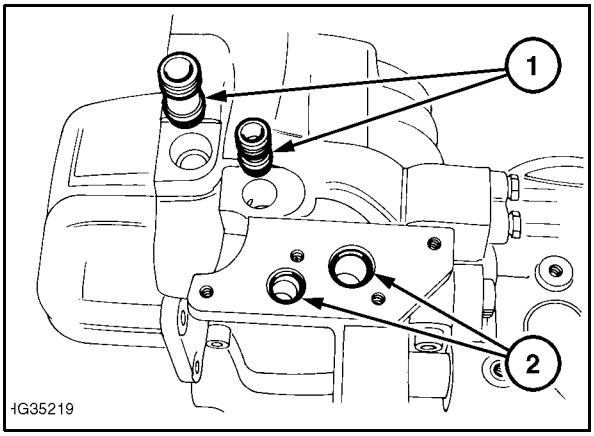

43

Charge Pressure Filter Dump Valve

NOTE: *The valve is supplied as a pre-set assembly and should not be adjusted. Install a new valve assembly whenever the valve does not operate correctly.*

1. Remove charge pressure filter manifold to expose dump valve (1), Figure 44.

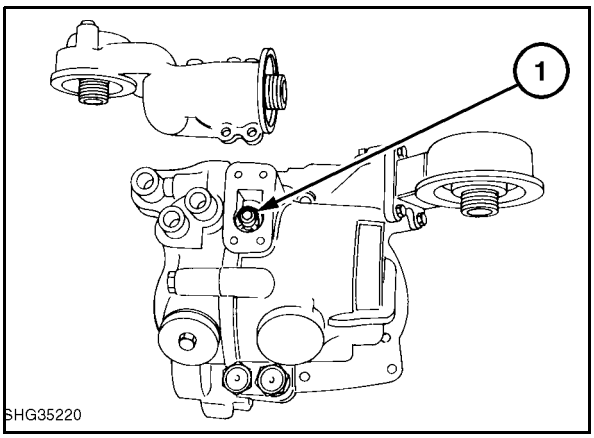

44

2. Using Tool No FNH00878 which engages in the two slots in the valve body unscrew and remove valve. Refer to Figure 45.

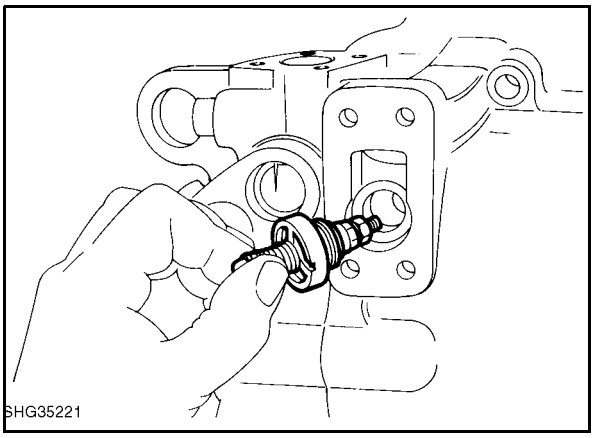

45

Pressure and Flow Compensator Valve

1. Remove housing containing pressure (2) and flow (1) compensating valves, Figure 46.

2. Remove the tamper proof caps, carefully unscrew each adjuster and remove the component parts, Figure 47.

3. To ensure correct re–assembly keep the component parts for each valve separate.

NOTE: *The stem on the flow compensating spool is longer than that on the pressure compensating spool*

IMPORTANT: *Due to extreme spring pressure within valves DO NOT remove rear plugs until the adjusters have been removed.*

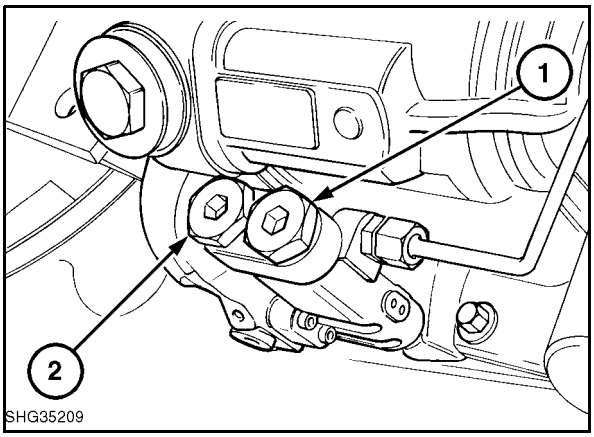

46

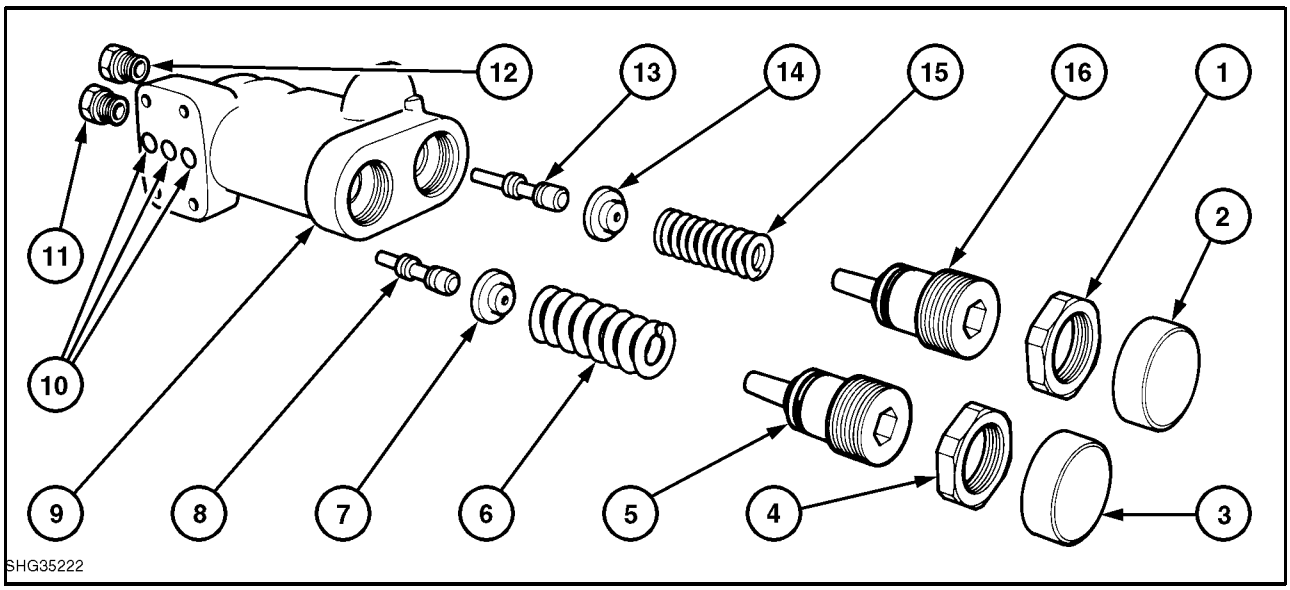

Flow and Pressure Compensating Valves 47

1. Locknut
2. Tamperproof Cap
3. Tamperproof Cap
4. Locknut
5. Adjuster and ‘O’ Ring Seal
6. Spring
7. Seat
8. Pressure Compensator Spool
9. Housing
10. ‘O’ Ring Seals
11. Plug and ‘O’ Ring
12. Plug and ‘O’ Ring
13. Flow Compensating Spool
14. Seat
15. Spring
16. Adjuster and ‘O’ Ring Seal

INSPECTION AND RE-ASSEMBLY OF VALVES

Re-assembly of the valves follows the removal procedure in reverse. On re-assembly observe the following:-

1. To aid re-assembly of pressure and flow compensating valves, the spools should be inserted into the rear of the housing, Figure 48.

- Wash all components in a suitable solvent.
- Examine all components for wear or damage. If the spools are damaged it is necessary to replace the complete valve assembly.

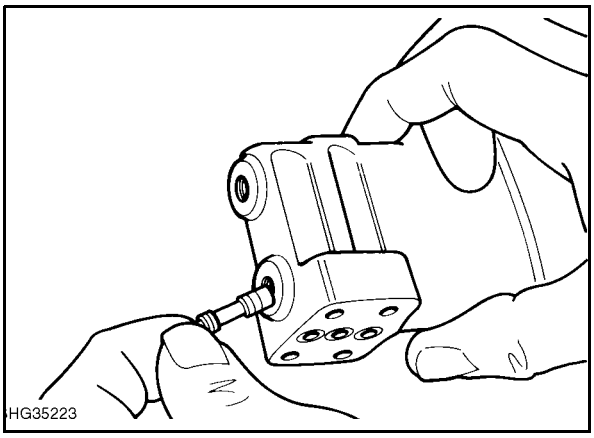

48

- Lubricate all parts with clean hydraulic oil.
- Replace all 'O' ring seals and lubricate with petroleum jelly.
- Refer to Figure 49 for installation of transfer tubes (2) in charge pressure filter manifold (1).
- Pressure test the pump and adjust the pressure and flow compensating valves to the correct specification as detailed in this Chapter.
- Tighten all plugs and locknuts to the correct torque as detailed in Specifications.

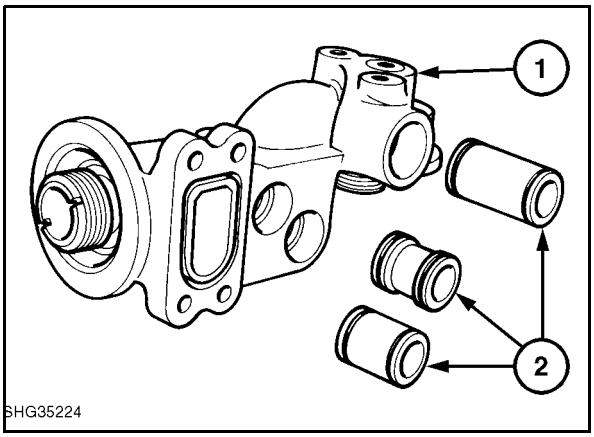

49

DISASSEMBLY OF CHARGE AND STEERING PUMPS

1. Push in driveshaft (2) to allow removal of snap ring (3). Withdraw driveshaft and small spring (1), Figure 50.

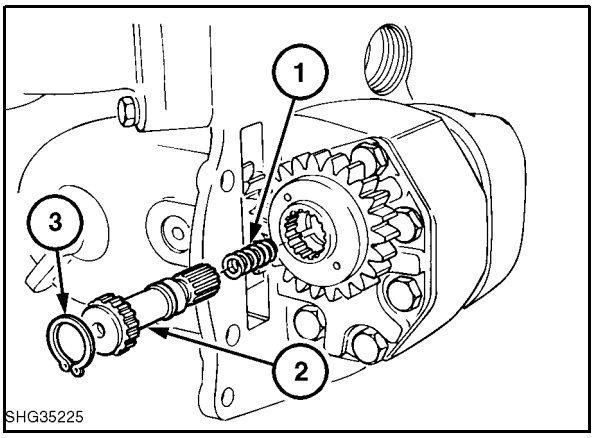

50

2. Using special Tool FNH00880 (1), engaged in slot in gear retainer and an impact wrench to break loctite seal on the retainer thread, unscrew the retainer which will at the same time 'jack' the gear (2) from the cover support plate, Figure 51.

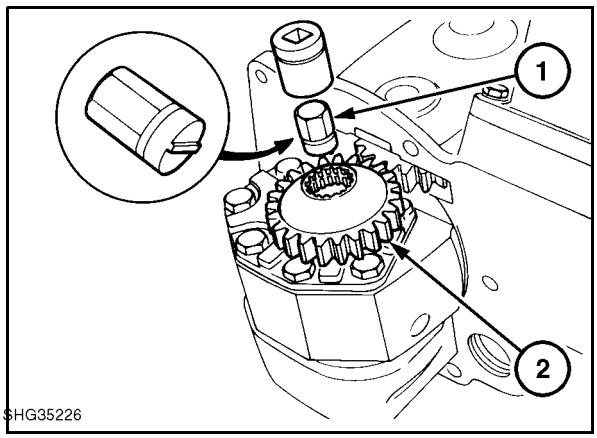

51

3. Remove idler gear shaft roll pin and using an M8 x 1.25 bolt (4), withdraw shaft (3). Figure 52.

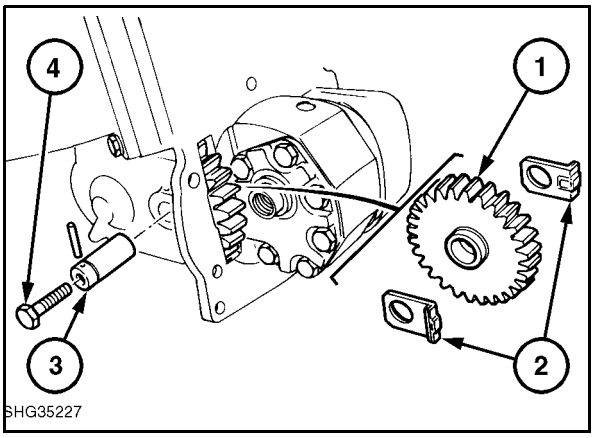

52

4. Remove the cover support plate (1), Figure 53 then withdraw idler gear (1) and thrust washers (2), Figure 52.

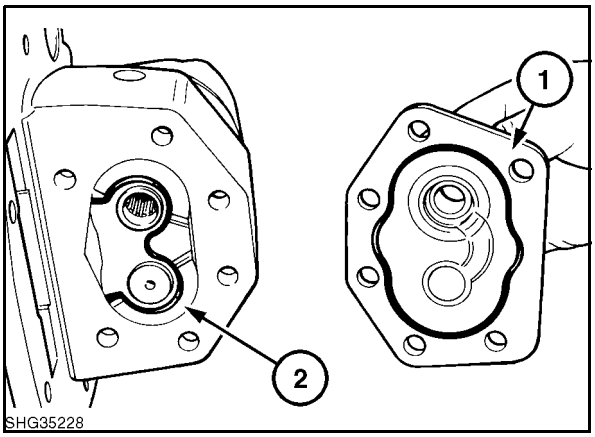

53

5. Place 15mm spacers (2) under the bolt heads of two of the cover support plate bolts (1) previously removed and use these bolts to re-clamp the steering pump to the charge pump body, Figure 54.

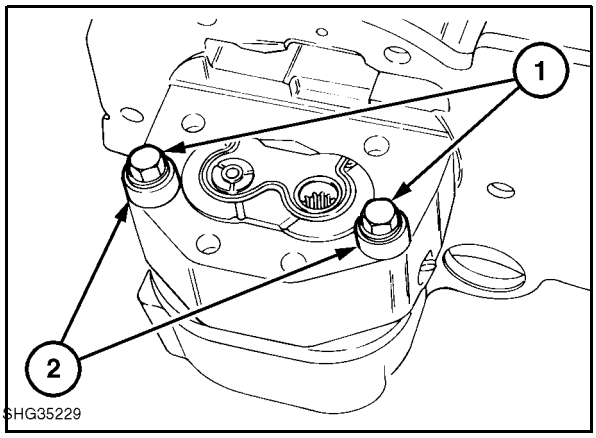

54

6. Remove charge pump gears and bearings, Figure 55.

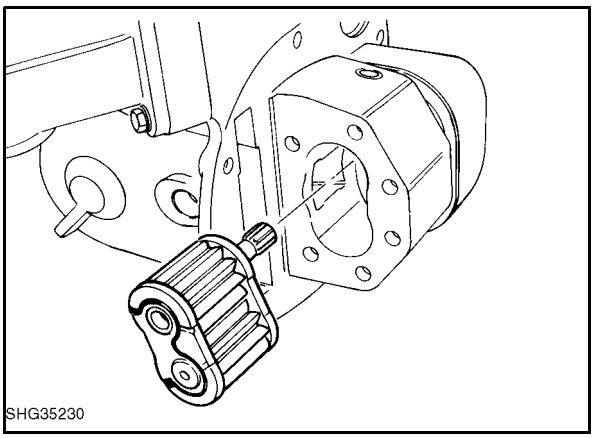

55

7. Remove clamping bolts and pull steering pump assembly from main pump housing, Figure 56

8. Prior to disassembly and to ensure correct re-assembly mark all charge and steering pump components on a non critical area with a felt pen. Separate pumps with reference to Figure 57.

The drive link is fixed in the charge pump driven gear with an internal snap ring. It is not recommended to separate these items.

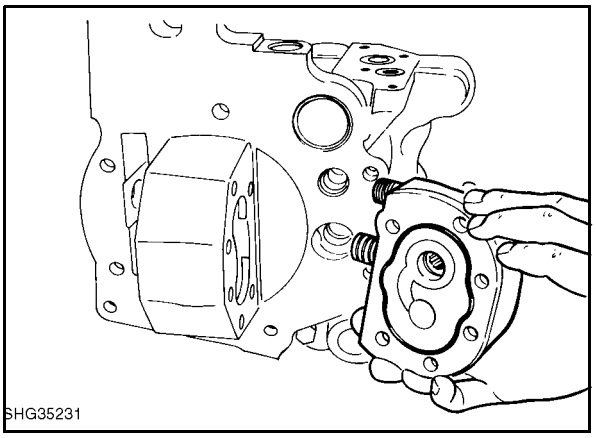

56

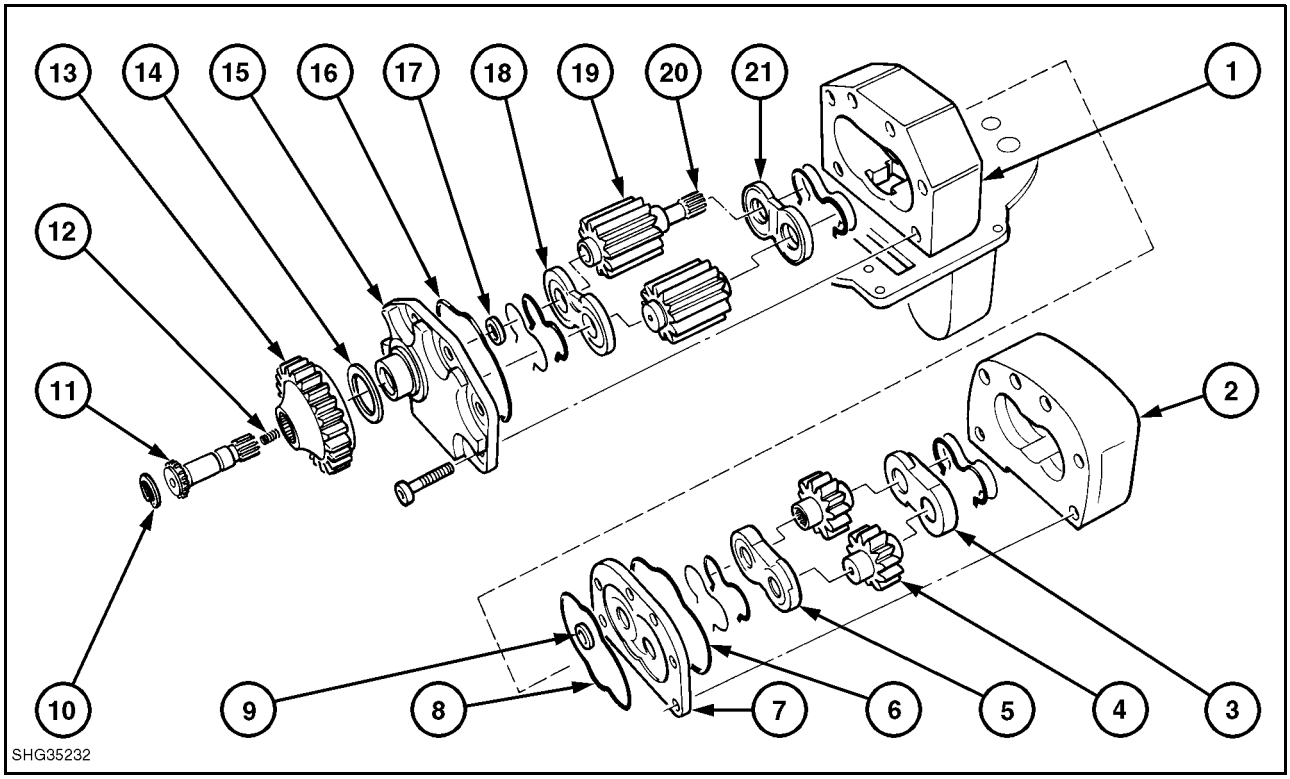

Charge and Steering Pump Assembly–Exploded View 57

1. Charge Pump Housing
2. Steering Pump Housing
3. Bearing Block and Seals
4. Steering Pump Gears
5. Bearing Block and Seals
6. Seal
7. Sandwich Plate
8. Seal
9. Oil Seal
10. Snap Ring
11. Drive Link
12. Spring
13. Drive Gear and Bearing
14. Washer
15. Cover Support Plate
16. Seal
17. Oil Seal
18. Bearing Block and Seals
19. Charge Pump Gears
20. Drive Link
21. Bearing Block and Seals

INSPECTION AND REPAIR OF CHARGE AND STEERING PUMPS

1. Pull transfer tubes from steering pump housing, Figure 58.

2. Wash all components in a suitable solvent and dry thoroughly.

3. Examine each bearing block for wear. Light score marking should be removed by placing a sheet of '0' grade emery paper, lubricated with paraffin, on a truly flat surface, then polish the bearing face using a light rotary motion. Bushes within the bearing blocks may show a bronze colour but are worn beyond acceptable limits if the bronze colour can be seen over the full length of the bush.

4. Inspect pump bodies for wear and damage. It is normal for gears to cut a light track on the inlet side of the body bore and providing the depth of the track does not exceed 0.004 in (0.10 mm), the body is re-usable. Using an internal micrometer measure the body at the bearing location and then at the track position to assess the track depth.

5. Examine pump gears for scored or worn side faces, journals and damaged teeth. Lightly scored side faces may be renovated by sandwiching emery paper between the gear face and a scrap bearing and rotating the gear.

NOTE: *If pump gears or bearing blocks are worn and require replacement the worn pumping element must be replaced as an assembly.*

IMPORTANT: *Whilst servicing the pump gears, particular attention must be paid to the following points:*

- *The width of each gear set must be within 0.0002 in. (0.005 mm) of each other to ensure satisfactory pump efficiency.*

- *Journals must be within 0.0005 in. (0.013 mm) of each other.*

- *Gear faces must be flat. This feature may be checked by blueing a bearing face and rotating against the gear. This check will also reveal any sharp edges on the teeth.*

6. Install new seals and 'O' rings.

7. Examine bearing (1) in pump drive gear (2) and replace if worn or damaged by removing retaining ring (3), Figure 59.

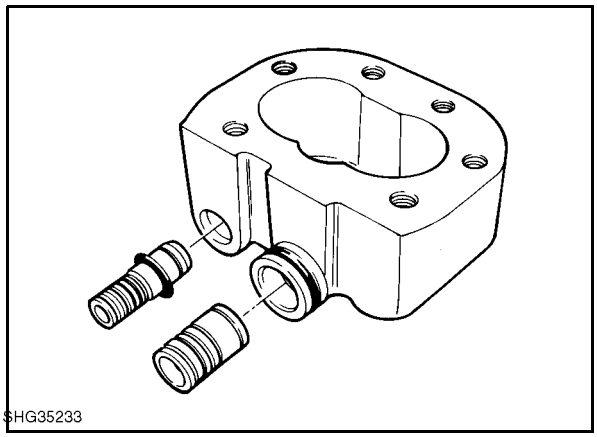

58

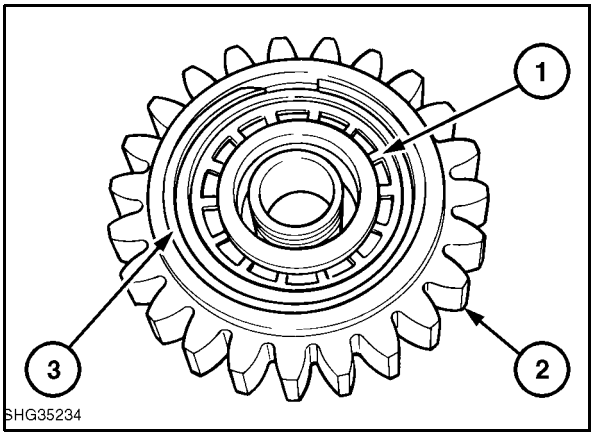

59

RE-ASSEMBLY OF CHARGE AND STEERING PUMPS

IMPORTANT: *The charge and steering pumps must be re-assembled using the following procedure. Attempts to deviate from this procedure may lead to incorrect assembly and damage of the pumps.*

When assembling the pump observe the following:-

- Lubricate all parts with hydraulic oil.
- Install new seals and 'O' rings and coat with petroleum jelly.

1. Apply petroleum jelly to the charge pump bearing block bore (2) and steering pump ports (1) & (3). Refer to Figure 60.

2. Position new seals in the charge pump bearing block and install the block in the charge pump housing, Figure 60. When installing the seals ensure that the plastic back-up seal is correctly positioned in the rubber seal.

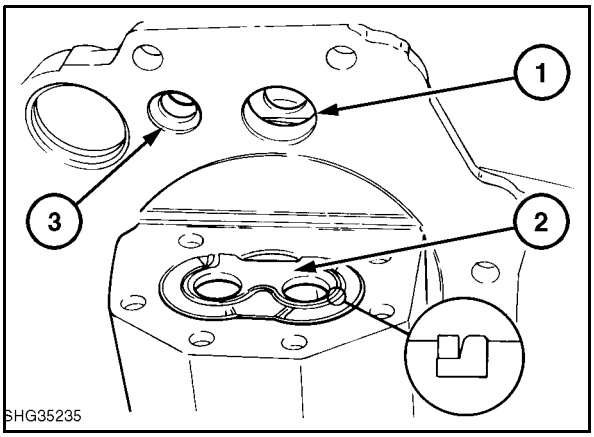

60

3. Fit the transfer tubes into the steering pump housing.

4. Install new seals into the steering pump bearing blocks and re-assemble the steering pump. **Ensure** that the bearing block with a **'radiused edge'** (1) is installed at the bottom of the steering pump body bore (2) Figure 61.

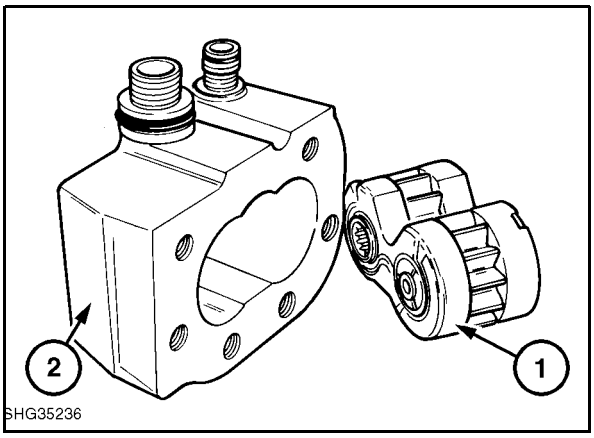

61

NOTE: *Only one of the two bearing blocks used in the steering pump is radiused on the corner edge. Installation of the sharp edged radius block at the bottom of the bore will prevent correct re-assembly and cause damage to the pump.*

5. Position the sandwich plate (2) onto the steering pump (1), Figure 62.

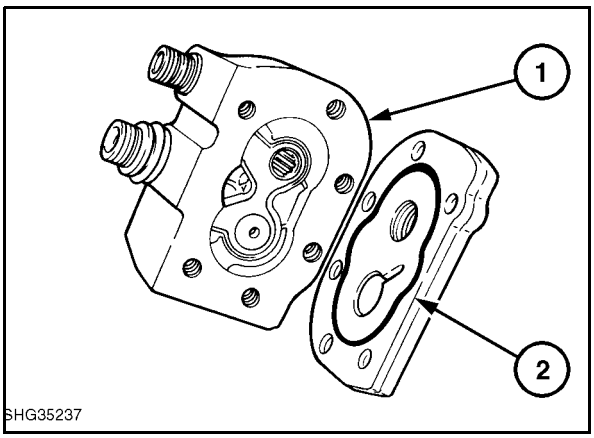

62

6. Position a tough flexible plastic sheet (2) over the face of the charge pump. (This sheet will prevent the seals in the pump assembly being displaced when installing the steering pump).

7. Place the steering pump (1) onto the charge pump housing and push the steering pump forward until the transfer tubes fully engage in the charge pump housing, Figure 63.

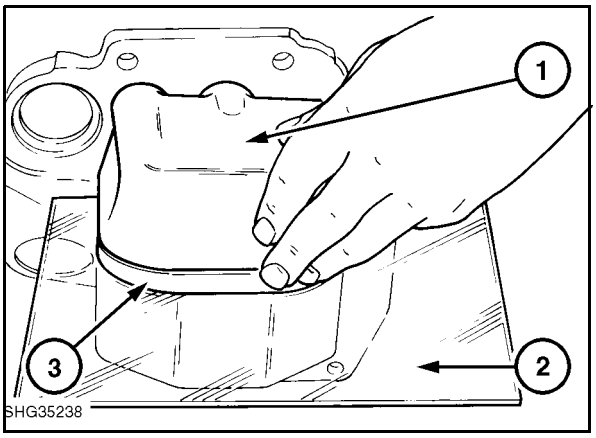

63

8. Slide the plastic sheet away from the pump.

9. Using two cover support plate bolts with 15mm spacers (1), Figure 64, placed under their heads, align and clamp the sandwich plate (3), Figure 63 and steering pump to the charge pump housing. When the pump is aligned the bolts (2) should be tightened sufficiently to clamp the pump bodies together, Figure 64.

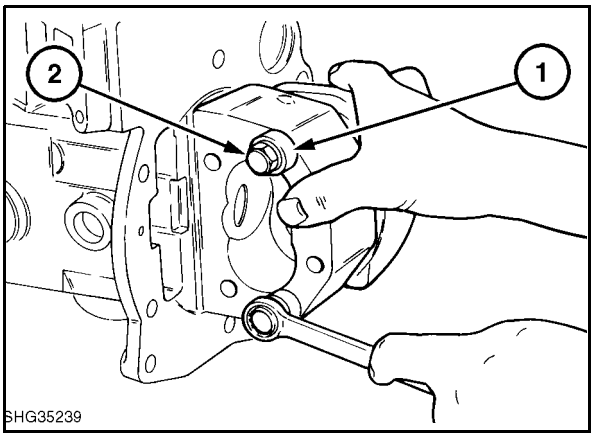

64

NOTE: *The spacers ensure the pump face is not damaged when the bolts are tightened. If difficulty is experienced in aligning the bolts to the threaded holes in the steering pump body, alignment bolts can be manufactured by turning a point onto the end of two M15 x 100mm long bolts and using these to align and clamp the pump body.*

10. Install the charge pump drive and driven gears, Figure 65 and lubricate using oil to Specification NH410B (Ambra Multi-G).

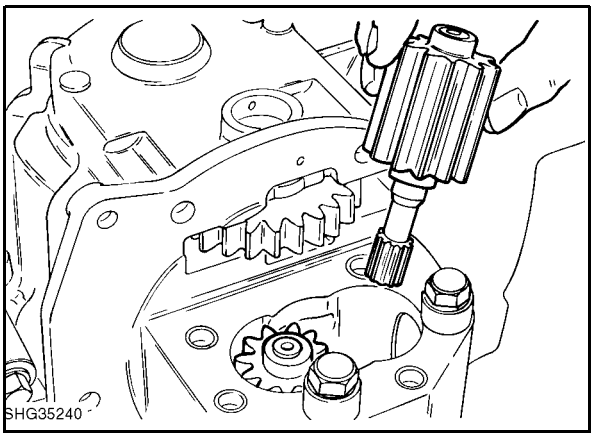

65

11. Install the charge pump bearing block (1), Figure 66.

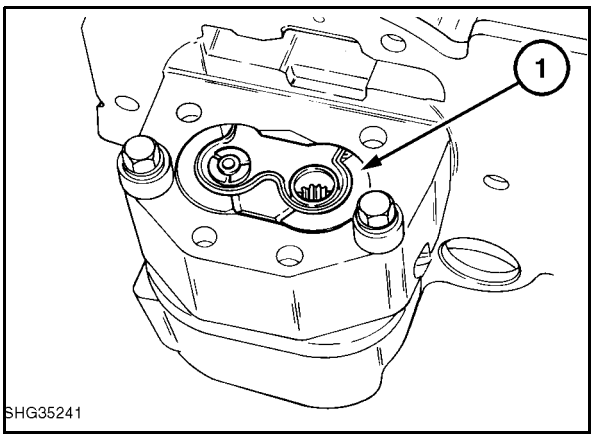

66

12. Remove cover support plate clamping bolts and install idler gear (1) and thrust plates (2), Figure 67. Do not install the idler gear shaft.

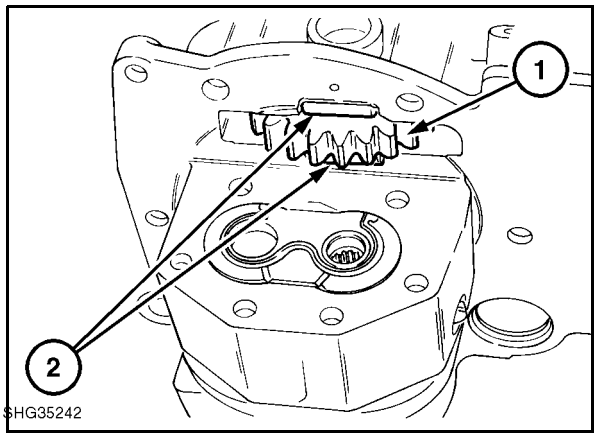

67

13. Install the cover support plate and tighten the retaining bolts to a torque of 30–37 lbf ft (40–50 Nm), Figure 68.

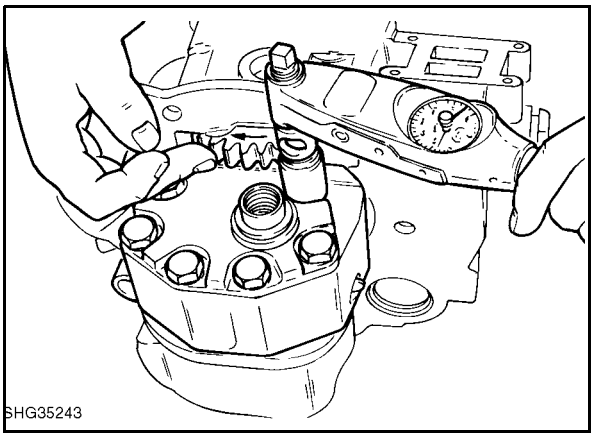

68

14. Install the idler shaft and roll pin (1). Refer to Figure 69.

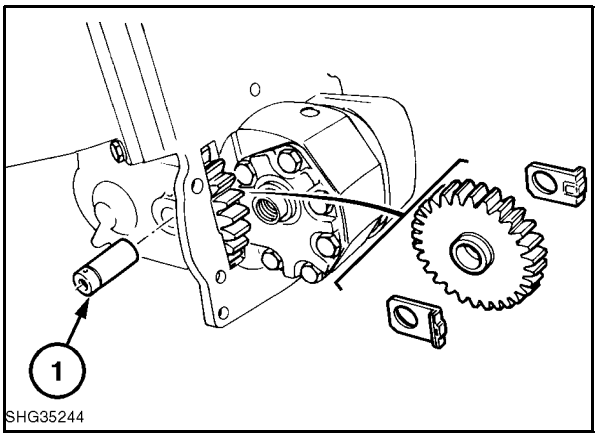

69

15. Apply one drop of New Holland Thread Lock, Part No. 82995773, to the threads in the drive gear and bearing assembly. Using drive gear tightening tool FNH00880 (1), Figure 70, tighten the gear (2) to the cover support plate until a torque of 26–33 lbf ft (35–45 Nm) is achieved.

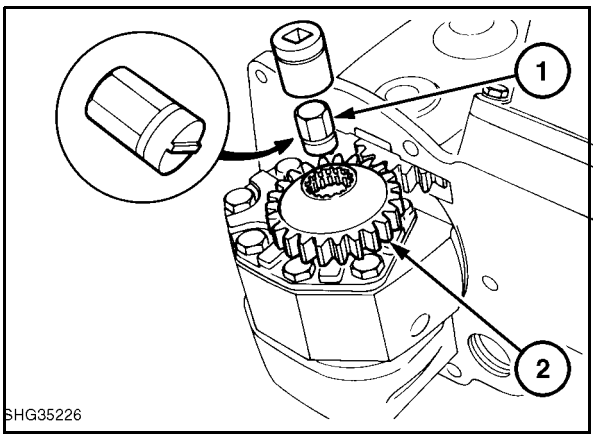

70

DISASSEMBLY OF VARIABLE DISPLACEMENT PISTON PUMP

If it is desirable to disassemble the variable displacement piston pump without removing the charge and steering pump, disconnect the steering pump oil gallery transfer tubes from the piston pump housing (2) as detailed in Step 1 below.

1. Remove the 'C' clip from the larger of the two sleeves connecting steering pump oil galleries to piston pump housing (3). Disengage sleeves from piston pump housing by using a screwdriver to ease each of the sleeves (1) toward the steering pump (4). Refer to Figure 71.

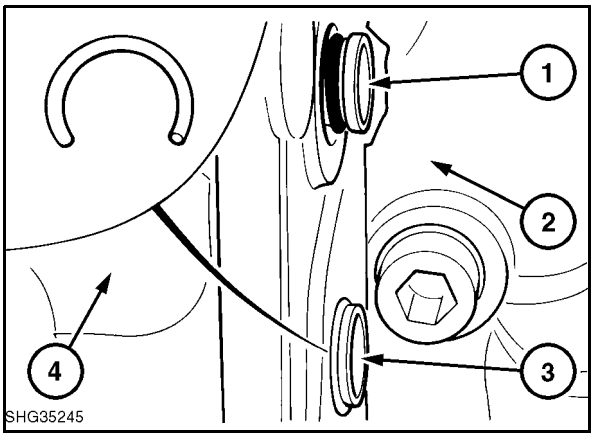

71

2. Remove pressure regulating valve housing (1), Figure 72.

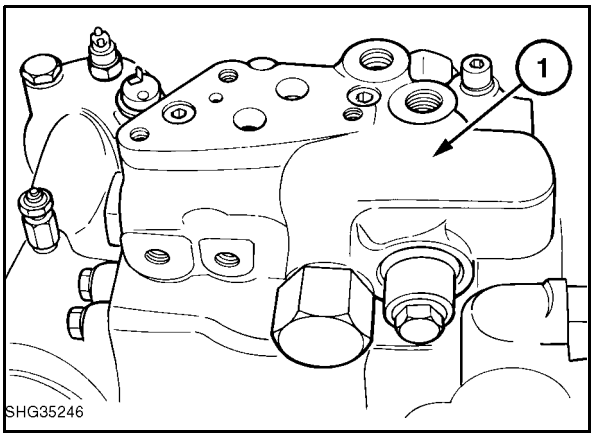

72

3. Remove four bolts and separate the two sections of variable displacement piston pump housing, Figure 73.

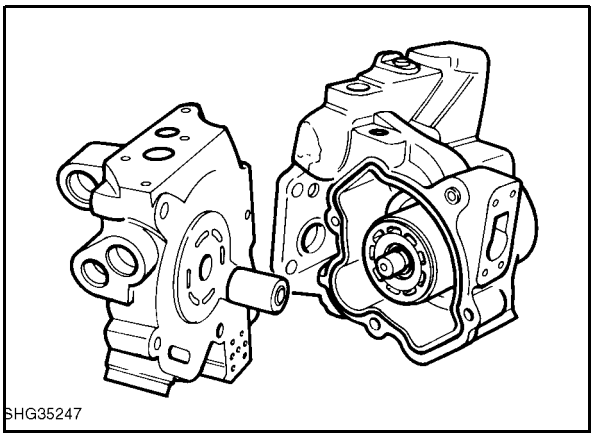

73

4. Remove pumping head assembly, Figure 74.

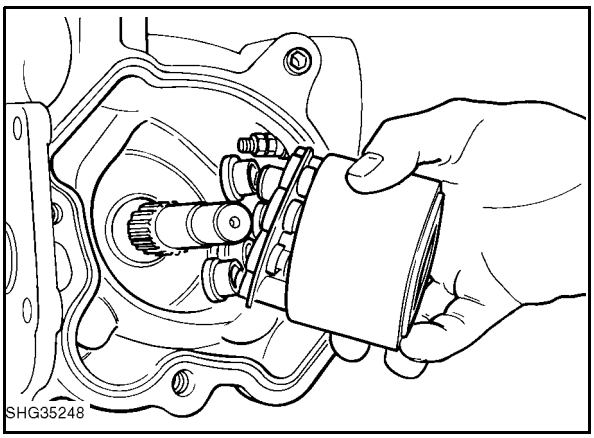

74

5. Using a suitable marker identify each piston and slipper to their corresponding barrel in the pumping head, Figure 75.

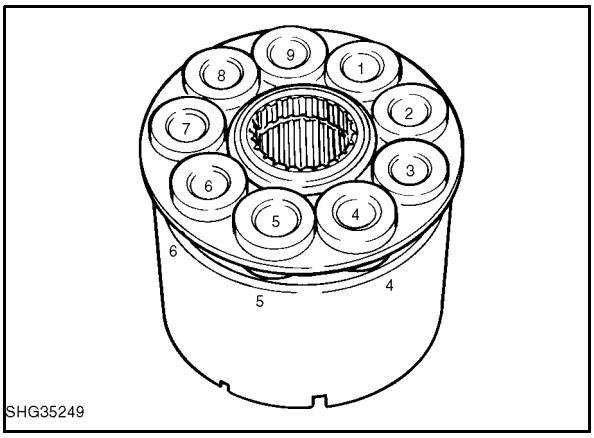

75

6. Separate pistons and slippers, Figure 76.

Pumping Head Slipper Assembly

1. Pistons and Slippers
2. Cone
3. Washer
4. Pumping Head
5. Pins (3 off)

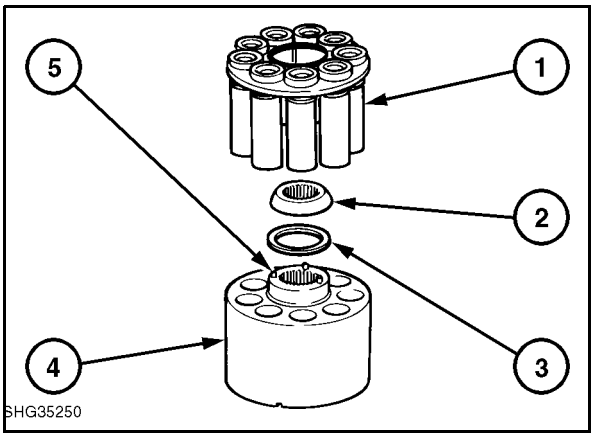

76

7. If necessary disassemble the spring assembly within the pumping head (5) by compressing the collar (2) against the spring (1) and removing the retaining ring (3) Figure 77. Note the washer behind the spring.

IMPORTANT: *Due to high spring pressure of pumping head spring assembly take care when removing retaining ring.*

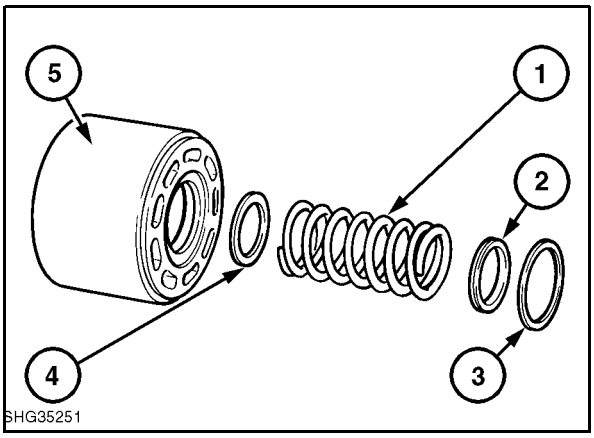

77

8. Remove swash plate (2), thrust plate (3) and return spring (1). Refer to Figure 78.

   The swash plate is removed using special tool FNH00879 and a slide hammer.

NOTE: *The bearings on the swash plate can be a tight fit in their locating bores of the pump housing. Under these circumstances it may be necessary to tap the face of the pump housing casting against a clean flat wooden bench in order to release the swash plate from the housing.*

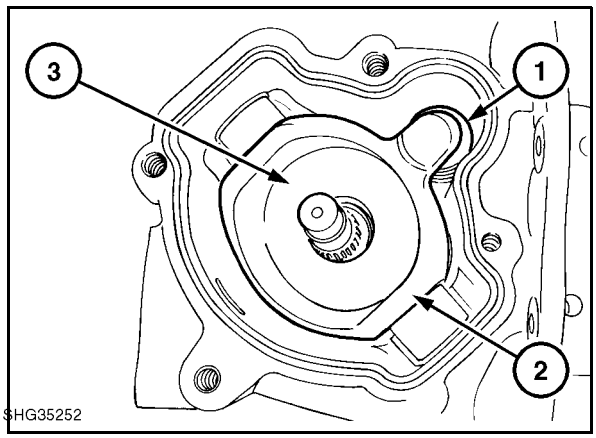

78

9. Remove snap ring and withdraw pump driveshaft assembly, Figure 79.

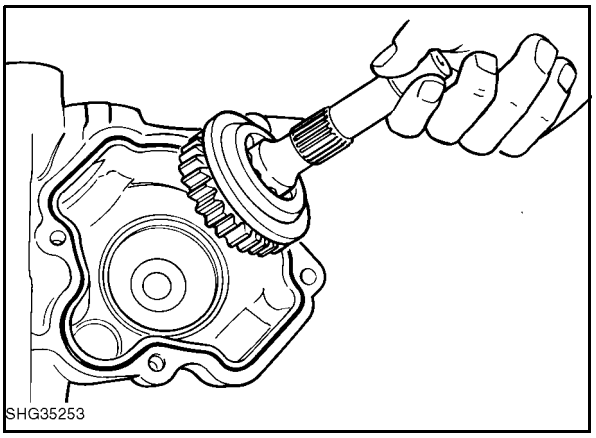

79

10. Separate the pump driveshaft and gear assembly, Figure 80.

Pump Driveshaft and Gear Assembly

1. Bearing
2. Shaft
3. Plate
4. Woodruff Key
5. Nut
6. Washer
7. Gear
8. Snap Ring
9. Snap Ring

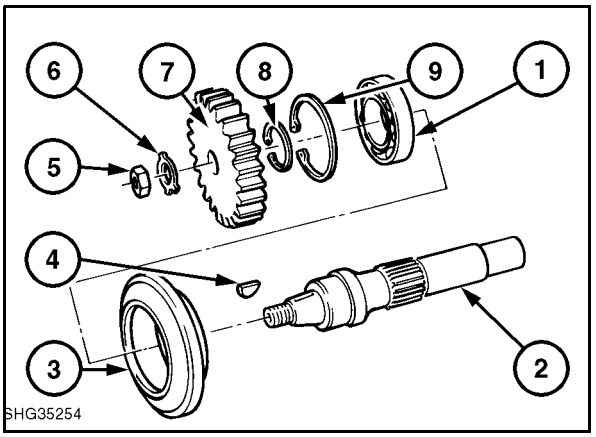

80

11. Remove swash plate servo piston (2), Figure 81.

12. Inspect the port plate (1) for damage but do not remove plate unless replacement is required.

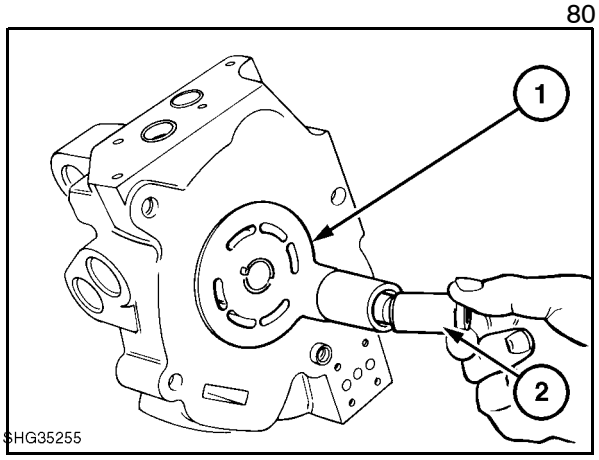

81

INSPECTION

1. Wash all components in a suitable solvent and dry thoroughly.

2. Check that the lubrication orifice in the idler gear shaft is unrestricted

3. Examine driveshaft locating bush (1) in pump cover, Figure 82. If the bush is worn or damaged the pump cover and bush must be replaced as an assembly.

4. Examine all components for wear or damage. If the pistons or slippers are worn the complete assembly should be replaced.

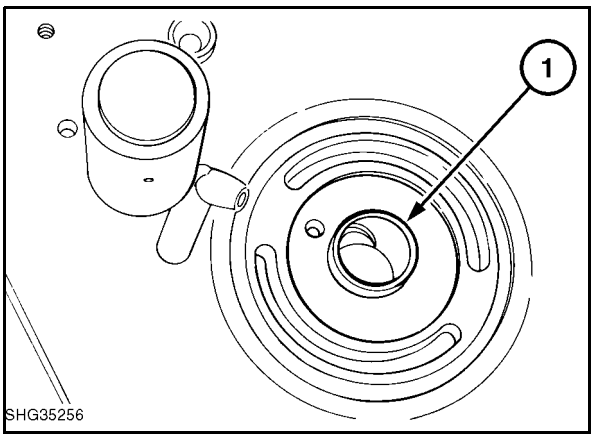

82

RE-ASSEMBLY

Re-assembly follows the disassembly procedure in reverse. On re-assembly observe the following:-

- Apply New Holland Thread Lock, Part No. 82995773, to threads of pump driveshaft gear and tighten the gear retaining nut to a torque of 86-90 lbf ft (117-123 Nm).
- Install new seals and 'O' rings.
- Lubricate all parts with hydraulic oil and coat all seals and 'O' rings with petroleum jelly.
- Refer to Figure 83 to assist in installing the driveshaft and swash plate assembly.
- To assist in re-assembly of pumping head apply petroleum jelly to the cone and washer.
- When installing pumping head onto driveshaft, ensure that splines on both the driveshaft and pumping head are aligned. Apply pressure to the base of the pumping head to ensure that the spring within the head reacts against the piston and slippers. If when applying pressure the resistance of the spring can not be felt it is an indication that the cone and washer have been displaced during assembly.
- Tighten all bolts to the correct torque. See Specifications.

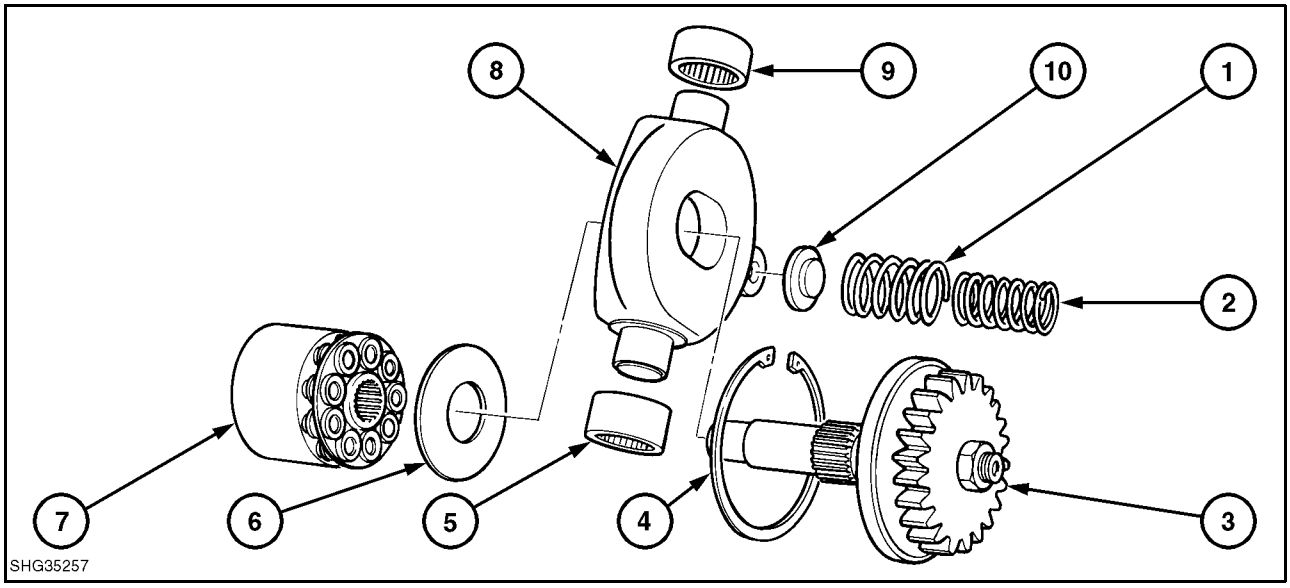

Piston Pumping Head and Swash Plate Installation 83

1. Spring
2. Spring
3. Driveshaft Assembly
4. Snap Ring
5. Bearing
6. Thrust plate
7. Pumping Head Assembly
8. Swash Plate
9. Bearing
10. Spring Seat

- When installing pressure regulating and low pressure circuit safety valve housing (1), accurately position the housing at 90° to pump mounting face (2), Figure 84. This is necessary to ensure that during installation the transfer tube (3) engages with the locating oil gallery in the transmission housing.

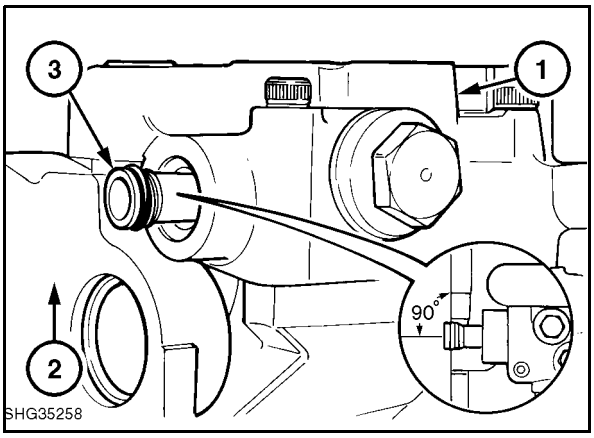

84

INSTALLATION

Installation follows the removal procedure in reverse. During installation observe the following:–

- Fit new seals (2) & (4) and washers (1) & (5) to the transfer tube Figure 85.

NOTE: *There are two designs of transfer tube. The tube shown in Figure 85 is that for tractors installed with a hydraulic lift assembly. On those special builds where a hydraulic lift assembly is not fitted the transfer tube is blanked off at one end.*

1. Washer
2. 'O' Ring
3. Tube
4. 'O' Ring
5. Washer

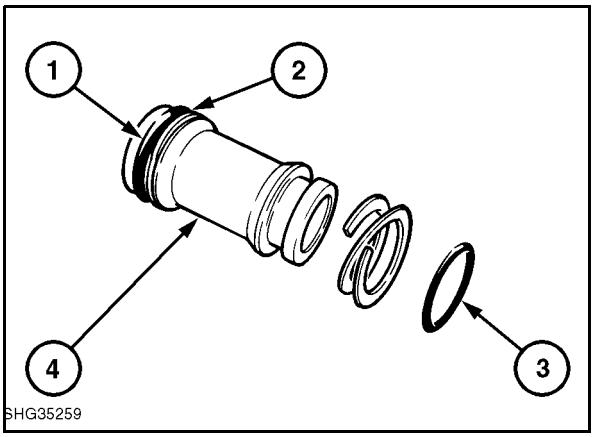

85

- Ensure seals and washers on the steering, charge pump and PTO tubes in rear axle centre housing are correctly fitted. Refer to Figure 86.

NOTE: *The charge pump intake tube is locked in position in the rear axle centre housing by a wire locking ring attached to the end of the tube.*

- Ensure steering pump intake tube is correctly located.

- Push the transfer tube into the rear axle centre housing, fit a new gasket and install the pump.

- Tighten all bolts to the correct torque. See Specifications Section 4.

- Refill the rear axle/transmission with 13.3 Imp Galls (16.0 US Galls, 60.6 Litres) of oil to New Holland specification 134 D.

Pressure test the pump after installation as described in Section D and test drive tractor for correct operation.

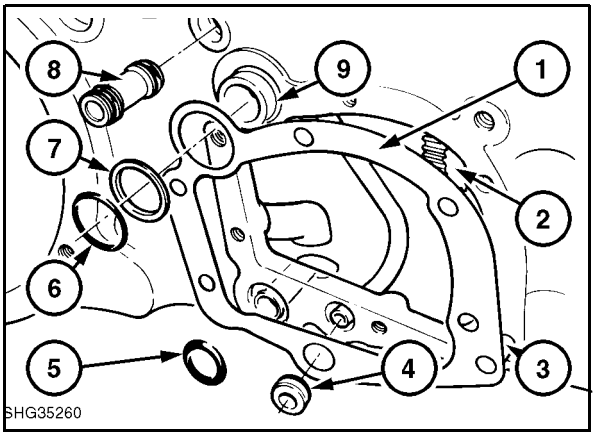

86

1. Gasket
2. Idler Gear
3. Dowel
4. Seal (PTO Feed Tube)
5. Seal (Steering Pump Intake Tube)
6. 'O' Ring
7. Washer
8. Transfer Tube
9. Charge Pump Intake Tube (Retained with a Wire Ring)

PRESSURE TESTING

This Section describes the procedure for pressure testing tractors installed with the variable displacement hydraulic pump with closed centre load sensing and integral charge and steering pumps. The procedure also includes the test procedure for checking steering relief valve, remote control valves and trailer brakes where fitted.

The pressure test values quoted in this procedure make allowances for time in service, however the values quoted in the Specifications are for new components.

Improved access to the test ports on the hydraulic pump can be achieved by supporting the tractor on suitable axle stands and removing the right hand rear wheel.

WARNING: *To prevent inadvertent movement of the tractor during pressure testing the following precautions must be taken.*

Remove fuse No 15 from the fuse panel.

If the tractor is fitted with four wheel drive disconnect the driveshaft coupling at the front axle pinion.

This precaution will prevent inadvertent movement of the tractor if the transmission gear shift levers are moved into the engaged position while performing the pressure tests.

IMPORTANT: *Before performing any flow or pressure checks it is important that the oil in the transmission or rear axle is at an operating temperature of 75°C (170°F). The method of achieving this temperature is detailed in steps 3–10 of the procedure for testing charge pressure.*

WARNING: *To avoid burning yourself with high temperature oil always warm the oil to temperature after installing all the test equipment.*

Load Sensing Circuit Test

This test should be performed before proceeding to other pressure tests, as it will help to identify any concerns related to hydraulic circuits which are not caused by a fault within the hydraulic pump assembly.

The test will check operation of the hydraulic circuits and load sensing lines to the trailer brake, hydraulic lift, remote control valves and trailer brake, where fitted.

1. Remove system and standby pressure test plug (1), Figure 87 or (1), Figure 88.

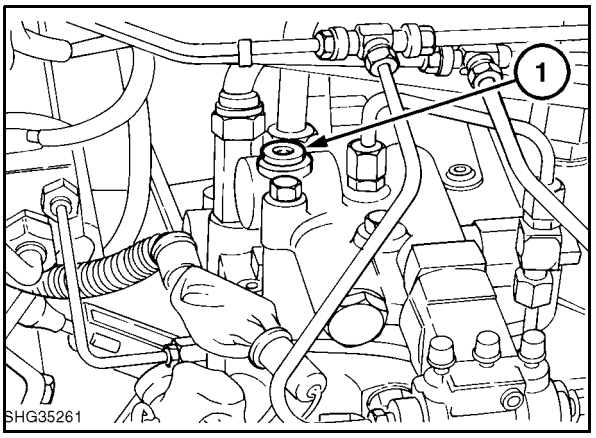

87

NOTE: *The thread size of the standby pressure test port is M14 x 1,5.*

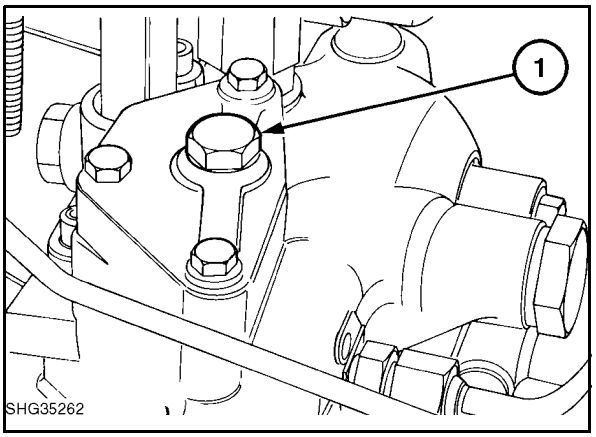

88

2. Install the 0–6000 lbf/in^2 (0–414 bar) pressure gauge FNH02028, Figure 89.

NOTE: *This test can be performed with a 0–3000 lbf/in^2 (0–207 bar) pressure gauge if available.*

3. Set the engine speed to 1500 rev/min.

4. Operate in turn the hydraulic lift, each remote control valve and the trailer brakes (where fitted). As each circuit is put under load the pressure reading should increase from 300–360 lbf/in^2 (21–25 bar) up to a maximum of 2825 lbf/in^2 (195 bar). When operating the trailer brake the pressure will rise to a maximum of 2140 lbf/in^2 (148 bar).

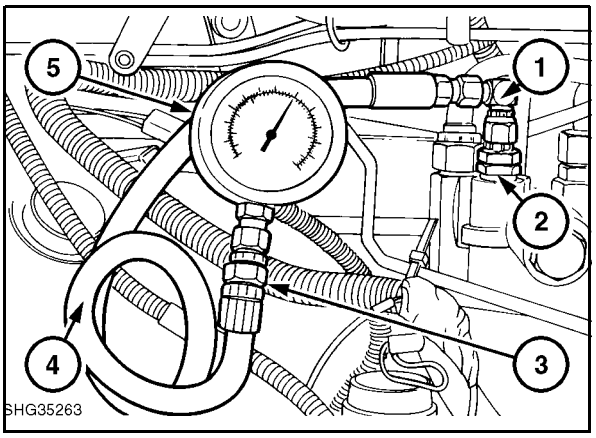

89

Load Sensing Circuit Test Gauge Installation

1. Elbow 86246–S36
2. Adaptor 4FT.851 (M14x1,5–$^7/_{16}$ JIC)
3. Adaptor FT. 8503–8 or FNH 0705
4. Test Hose 83936707
5. Pressure Gauge FT. 8503A

If the tractor is known to have a hydraulic malfunction and this test registers a pressure increases for at least one, but not all, of the hydraulic circuits being tested it is an indication that the concern is probably **not** related to the hydraulic pump.

Should this occur the shuttle valves in the load sensing line of the circuit not producing a pressure increase should be examined for sticking in an open position prior to continuing with the pump pressure test.

For the location of the shuttle valves refer to Figure 90 and Figure 91.

If the trailer brake valve pressure reading is incorrect examine the shuttle valve adjacent to the trailer brake valve (1), Figure 90.

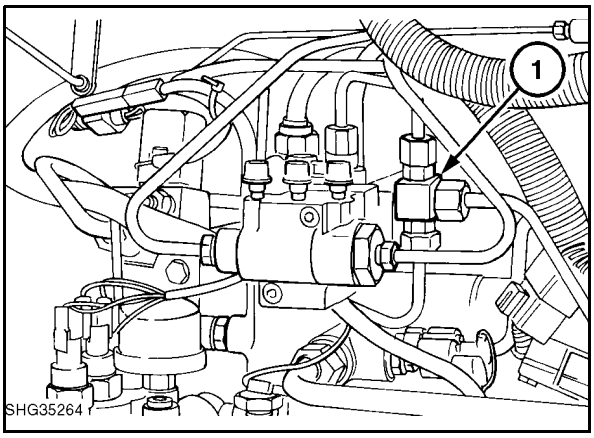

90

If the hydraulic lift pressure reading is incorrect, examine the shuttle valve leading to the hydraulic lift control valve (1), Figure 91 (EDC valve or unload valve as fitted) and the shuttle valve adjacent to the trailer brake valve, where fitted.

If the remote control valve pressure readings are incorrect examine all shuttle valves.

NOTE: *Shuttle valves are also located within each of the remote valves installed on the tractor.*

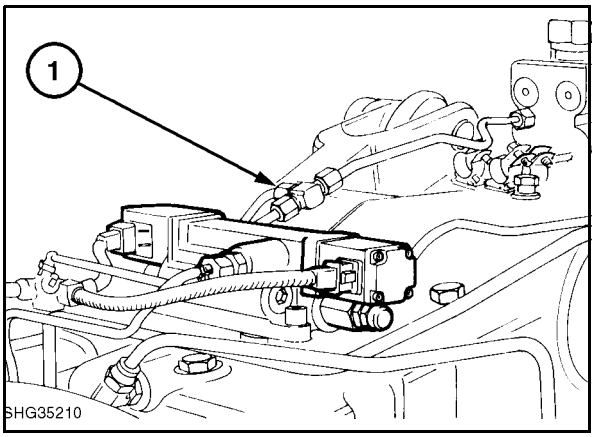

91

If the shuttle valves are not sticking, attention should also be given to the hydraulic valves and components within the circuit that does not operate correctly.

Charge and Variable Displacement Piston Pump Pressure Testing

Charge Pressure Test

1. Remove charge pressure switch (1), Figure 92.

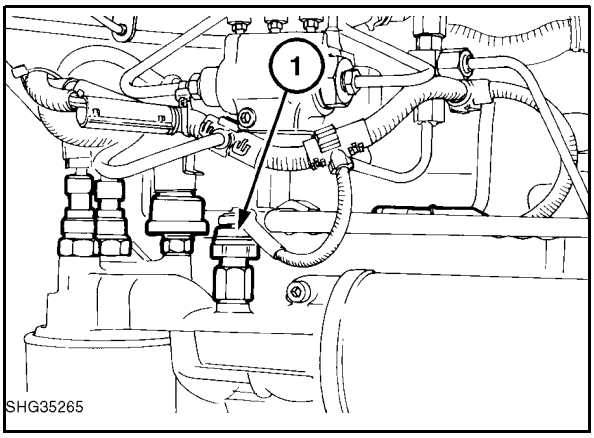

92

2. Install 0–100 lbf/in^2 (0–6.6 bar) pressure gauge FT. 4096, Figure 93.

NOTE: *The thread size of the charge pressure switch port is M10 x 1.*

Checking Charge Pressure

1. Pressure Gauge FNH02028
2. Adaptor FNH0705
3. Test Hose 83936707
4. Test Hose 83926717

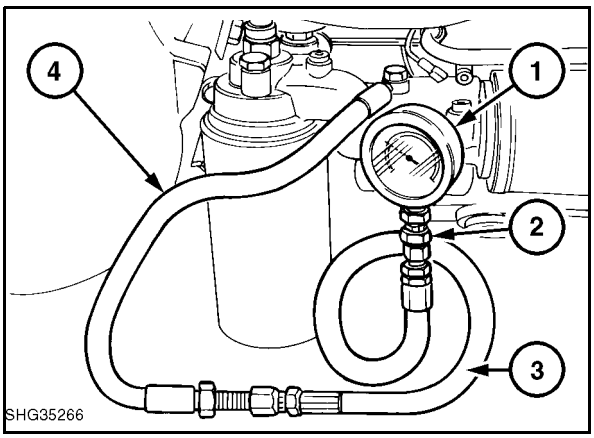

93

3. Using remote control valve couplers, install inlet hose (4) of flow meter into lift coupler of left hand side inner remote control valve. Install return hose (2) from flow meter into the rear axle oil filler tube, Figure 94.

4. Set flow control knob (1) on remote control valves to minimum flow.

5. Ensure load valve (3) on flow meter is fully open.

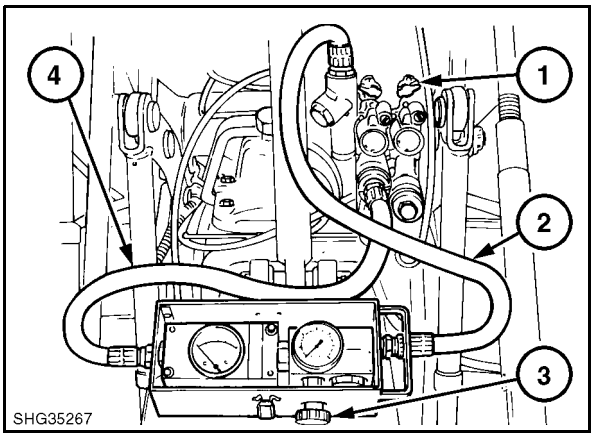

94

6. Blank oil cooler with a piece of card. Start engine and set engine speed to 2100 rev/min.

7. Move appropriate remote control valve operating lever (1) or (2) to cylinder extend position and direct the oil flow from the remote valve to the flow meter.

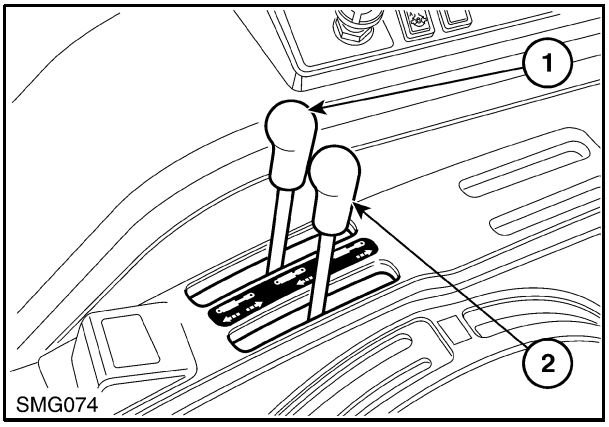

95

8. After ensuring that flow meter is measuring oil flow correctly, set remote control valve flow knobs to maximum flow.

9. Adjust load valve on flow meter until hydraulic oil is at pressure of 2000 lbf/in^2 and allow engine to run until hydraulic oil is at an operating temperature of 75°C (170°F).

10. Open load valve on flowmeter and set engine speed to 1500 rev/min.

11. Move remote control valve lever between cylinder extend and neutral positions while observing the pressure gauge readings. The pressure reading should not vary outside 23–50 lbf/in^2 (1.6–3.4 bar).

Pressure readings conforming to the specified values, confirm that the charge pump inlet filter (1), charge pump, charge pressure bypass valve (2) and charge pressure filter dump valve (3), are working correctly, Figure 96.

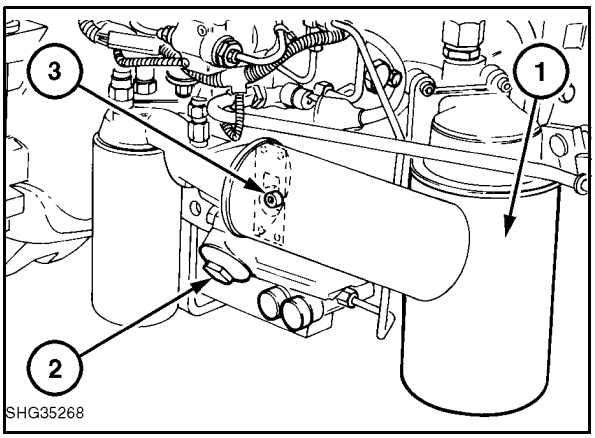

96

Maximum System Pressure Test (High Pressure Standby)

1. With flow meter installed as for the charge pressure test, set engine speed to 1500 rev/min. Using an assisstant to hold blue remote control valve lever in extend position, slowly close load valve on flow meter. Observe on the flow meter or pressure gauge installed for the load sensing circuit test, the maximum pressure recorded. The pressure reading should be between 2675–2825 lbf/in^2 (184–195 bar).

Pressure readings conforming to the specified values, confirm that the pressure compensating valve (2) is working correctly.

If the pressure reading is marginally away from specification, remove the tamperproof cap, loosen the locknut on the pressure compensating valve adjuster and adjust the pressure.

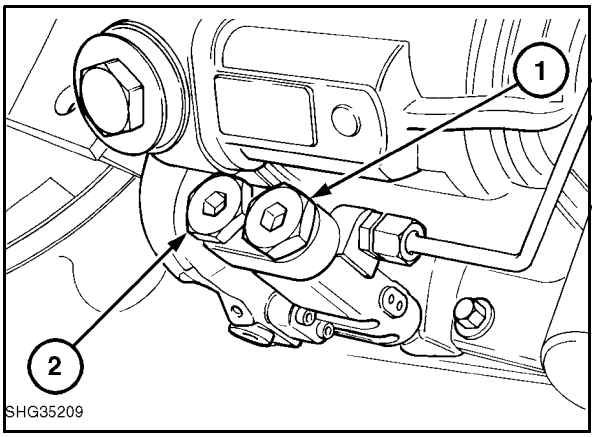

97

If a maximum system pressure of only 310–350 lbf/in^2 (21–24 bar) is recorded and the load sensing valves are not sticking, examine the flow (1) and pressure (2) compensating valves for sticking in an open position.

Fit new tamperproof cap(s) after adjustment has been completed.

Swash Plate Servo Piston Test

1. Perform maximum system pressure test then fully open the load valve on the flow meter.

2. Observe the pressure on the flowmeter or load sensing circuit test pressure gauge.

If the pressure drops from maximum system pressure to approximately 400 lbf/in^2 (27 bar) the servo piston is operating correctly. The reduction in pressure is also an indication that standby pressure is correct. Where it is necessary to accurately confirm the standby pressure value perform the Standby Pressure test using the 0–600 lbf/in^2 (0–42 bar) pressure gauge FT. 4100 as described on page 4-73.

Standby Pressure Test
(Low Pressure Standby)

This test procedure will enable an accurate reading of the standby pressure to be recorded.

1. Remove the pressure gauge installed for the load sensing circuit pressure test and install a 0–600 lbf/in^2 (0–42 bar) pressure gauge FT. 4100 in its place, Figure 98.

2. Ensure remote control valve levers are in **'Neutral'** position and tractor footbrake is not being applied.

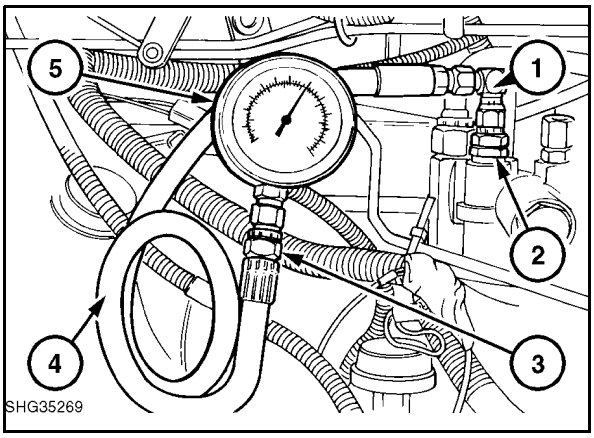

Checking Standby Pressures 98

1. Elbow 82512933
2. Adaptor 4FT.851 (M14x1,5–$^7/_{16}$ JIC)
3. Adaptor FT. 8503–8 or FNH0705
4. Test Hose 83936707
5. Pressure Gauge FNH02027

IMPORTANT: ***Do Not*** *operate the hydraulic lift, remote valves or tractor brakes. If these circuits are operated the standby pressure can increase towards the maximum system pressure of 2800 lbf/in^2, resulting in damage to the pressure gauge.*

3. Vary engine speed between 1000–2100 rev/min and observe pressure reading. The pressure recorded should be between 300–360 lbf/in^2 (21–25 bar).

If the pressure reading is marginally away from specification, remove the tamperproof cap, loosen the locknut on the flow compensating valve adjuster (1) and adjust the pressure.

If the reading is high examine the flow compensating valve spool for sticking, Figure 99.

Fit new tamper proof cap(s) after adjustment has been completed.

If the reading is low and the charge pressure is to Specification, the concern may be due to a large leak in the low pressure circuit, refer to low pressure circuit test.

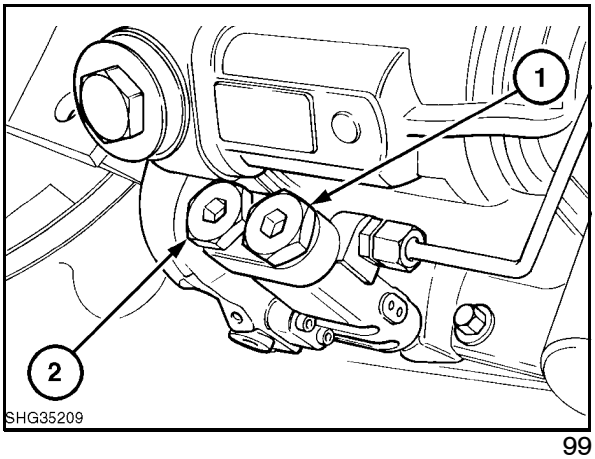

99

Variable Displacement Piston Pump Flow (Output)

1. With flow meter installed as for the charge pressure test, increase engine speed to 2100 rev/min.

2. Engage P.T.O., disengage four wheel drive and ensure transmission is in neutral and that the tractor clutch pedal is not being depressed.

3. Slowly close load valve on flow meter until a pressure of 2500 lbf/in^2 (172 bar) is observed on the flow meter pressure gauge.

4. Record pump flow (output).

If pump flow is less than 16 U.S Gals/min (13 Imp Gals/min 60 Ltrs/min) and the following low pressure circuit test is to specification the pump must be overhauled.

Low Pressure Circuit Test

This pressure test will check that oil at a minimum pressure of 250 lbf/in^2 (17 bar) is being directed by the pressure regulating valve to the low pressure circuits which operate the P.T.O., differential lock, four wheel drive disengagement system, electronic draft control valve and 16 x 6 transmission clutches, where fitted.

1. Remove transmission pressure switch, Figure 100.

2. Install 0–600 lbf/in^2 (0–42 bar) pressure gauge FT. 4100, Figure 101.

3. Set engine speed to 1500 rev/min.

4. Observe pressure reading. Pressure recorded should be between 250–280lbf/in^2 (17–19 bar).

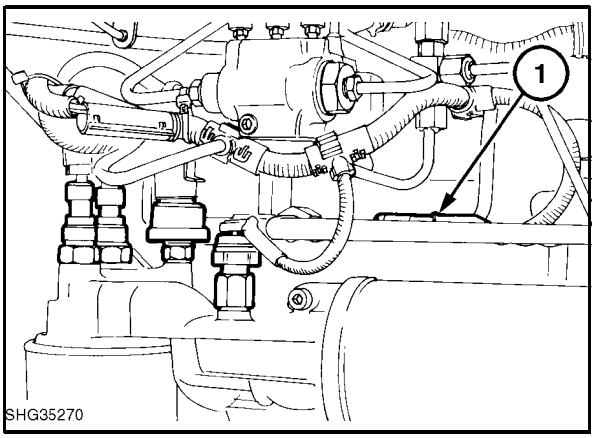

100

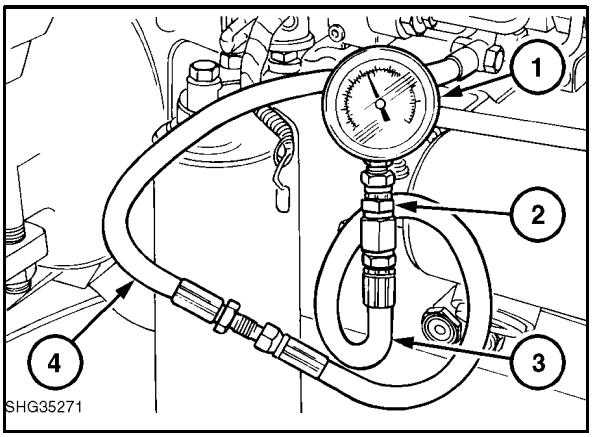

Low Pressure Circuit Test 101

1. Pressure Gauge FNH02027
2. Adaptor FT. 8503–8 or FNH00705
3. Test Hose 83936707
4. Test Hose 83926717

If the pressure reading is marginally away from specification re-shim the pressure regulating valve. One shim represents a change in pressure of 5 lbf/in^2 (0.35 bar).

If the pressure reading is considerably away from specification examine the pressure regulating valve for sticking, Figure 102.

If the pressure regulating valve (1) is functioning correctly, examine the low pressure circuit safety valve for sticking in 'Open' position.

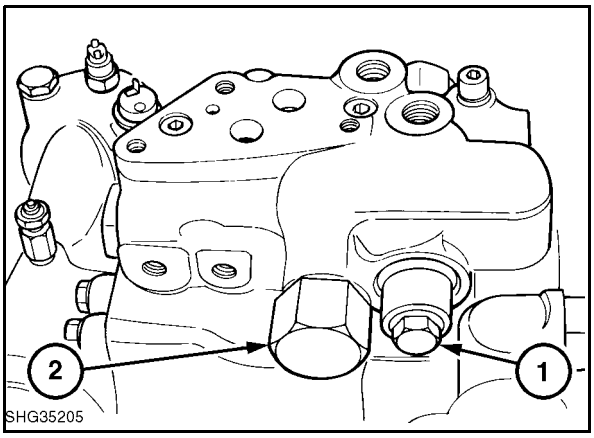

102

5. If no fault can be found, loosen the pump body and place a piece of 0.010 in (0.25mm) shim steel over the pump outlet port to the PTO clutch feed tube (1) Refer to Figure 103 and Figure 104.

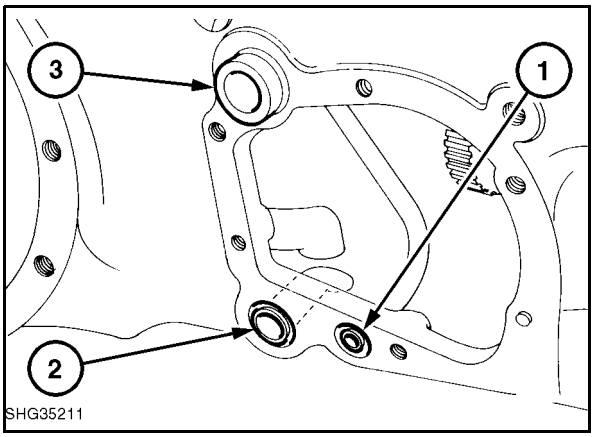

103

6. Ensure the shim steel is positioned between the pump flange and mounting face gasket (1), then tighten the pump retaining bolts sufficiently to hold the shim steel in position without a leakage of oil Figure 104. (Do Not over-tighten the bolts or damage may occur to the pump mounting flange). Re-check the pressure in the low pressure circuit.

If the reading is now correct, check for a large leak on the P.T.O. circuit which may be due to the feed pipe and sealing washer being incorrectly fitted, the wrong P.T.O. valve fitted or a large leak in the P.T.O. clutch.

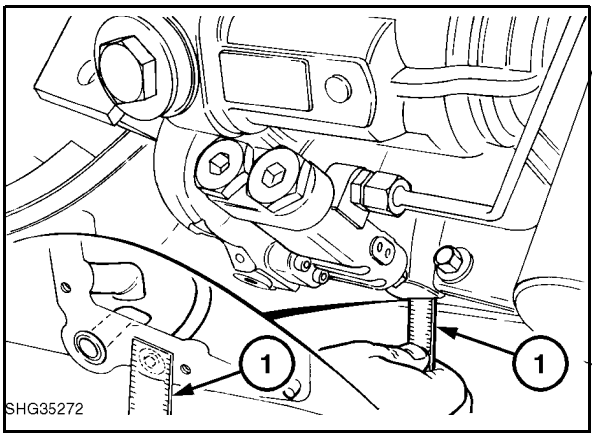

104

7. If the low pressure readings are still below specified value disconnect the feed tube to the transmission (2), Figure 105 and install a $^{11}/_{16}$ in (18 mm) blanking shim in the tube (1). Reconnect the tube and re-test the low pressure circuit.

If the reading is now to specification a leakage is occurring within the transmission clutch circuits.

If no fault can be found and standby pressure test was to specification re-shim the pressure regulating valve to the correct pressure.

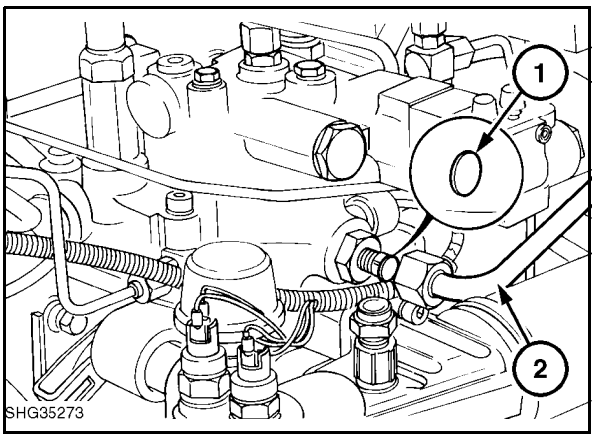

105

Trailer Brake Valve Pressure Test

1. Connect 0–6000 lbf/in^2 (0–414 bar) pressure gauge FT.8503A to trailer brake coupler, Figure 106.

2. Set engine speed to 1500 rev/min.

3. Depress right hand brake pedal. There should be no reading on the pressure gauge.

4. Depress left hand brake pedal. There should be no reading on the pressure gauge.

5. Couple together and depress both brake pedals. The reading on the pressure gauge should increase as the brake pedals are depressed harder. The pressure recorded, depending on pedal effort, should increase up, to a maximum pressure of 2140 lbf/in^2 (147 bar).

6. Release brake pedals. Pressure should reduce to zero.

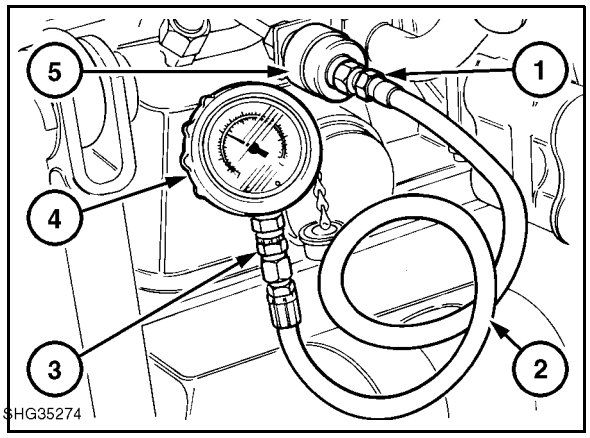

Trailer Brake Pressure Test 106

1. Adaptor 4FT.854
2. Test Hose 83936707
3. Adaptor FNH00705
4. Pressure Gauge FNH02028
5. Trailer Brake Coupler

Steering Pump

There is no relief valve in the steering pump. The following practical test will determine if steering pump output is sufficient to allow satisfactory operation of the steering system.

Steering Test

1. Set engine speed to 1000 rev/min.

2. Turn steering quickly from lock to lock. If steering is operating correctly the reaction of the steering should be immediate with no time delay between turning the steering wheel and movement of the wheels. At full lock the relief valve in the steering motor should be heard to blow and the engine speed should drop to approximately 970 rev/min.

Steering Pump Flow Test

1. Disconnect and remove oil cooler bypass valve (1), Figure 107.

2. Plug feed (2) and return (3) tubes to oil cooler to prevent contamination and loss of oil.

3. Using Adaptors 4FT.852 (1) install flowmeter between tube from steering motor (5), Figure 107 and tube to transmission/rear axle lubrication circuits (4), Figure 107.

NOTE: *Adaptors 4FT.852 are suitable for installing 3/4 in JIC hoses to flowmeter. If hoses of a different size are used with the flowmeter, suitable adaptors with a female thread size of $^{3}/_{4}$–18 UNS on one end will be required.*

4. **'Ensure'** flowmeter load valve is fully open, Figure 108.

IMPORTANT: *If the flowmeter load valve remains closed damage will occur to the steering pump.*

5. Set engine speed to 2100 rev/min and turn steering onto full left hand lock. Hold steering on full lock so that steering motor relief valve can be heard to 'blow'.

6. Record pump flow.

If pump flow is less than 8.2 U.S Galls/min (6.8 Imp Galls/min 31 Ltrs/min) the steering pump requires overhaul.

Steering Relief Valve Pressure Test

IMPORTANT: *There is no relief valve in the steering pump and the following pressure tests must only be performed as specified below. Failure to observe this precaution may result in severe damage to the steering and lubrication circuit hydraulic pump.*

1. Turn steering onto full left hand lock.

2. Disconnect left hand turn feed hose at steering cylinder.

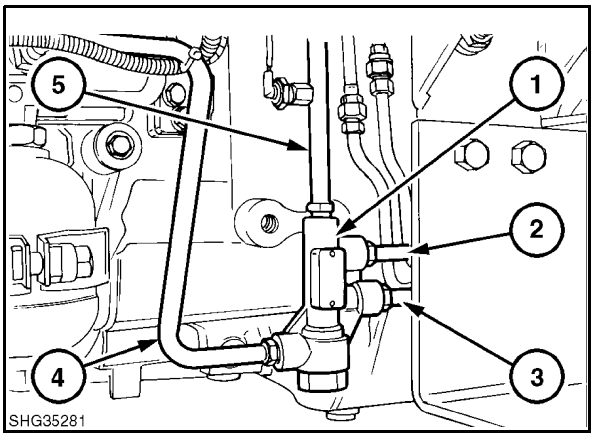

107

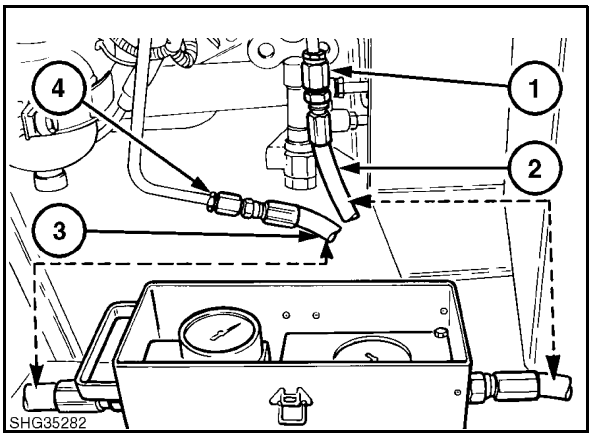

Flow Testing Steering Pump 108

1. Adaptor 4FT. 852
2. Supply Hose to Flowmeter
3. Flowmeter Return Hose
4. Adaptor 4FT. 852

3. Install a 0–6000 lbf/in^2 pressure gauge FT.8503A, (1) Figure 109, using adaptor FT5803–8, (2) Figure 109, and a locally procured 7/16 JIC male × 9/16 JIC male adaptor, (3), Figure 109.

   Using kit 292870 install adaptor 293874 and 291318 into the place of the banjo fitting of the steering hydraulic cylinder.

4. Start tractor and set engine speed to 1000 rev/min. Turn steering wheel to the left with a pull of approximately 5 lbf and observe the pressure reading.

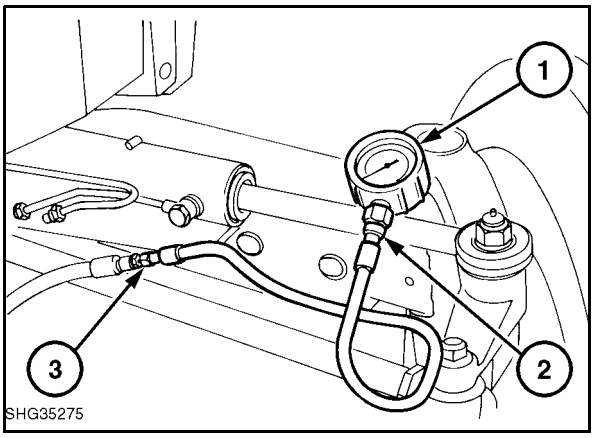

Power Steering Circuit Pressure Test 109

1. Pressure Gauge FT. 8503A
2. Adaptor FT. 8503–8 or FNH00705
3. Test Hose E1NN F493 AA Finis Code 3936707
4. Adaptor 4FT.853 (11/16 x 16UN to $^7/_{16}$ JIC)
5. Left Hand Turn Steering Hose

The pressure reading should be 186 bar (2700 ibf.in^2) for all models.

If the steering test was satisfactory but the pressure readings are away from specification the relief valve in the steering motor must be replaced or adjusted. Refer to Section 41.

Oil Cooler and Lubrication Circuit Pressure Test

IMPORTANT: *To obtain correct pressure readings in this test it is important that the temperature of the oil in the transmission/rear axle must be 75^{0}C (170^{0}F).*

1. Remove low flow steering/lubrication circuit pressure switch (1), Figure 110.

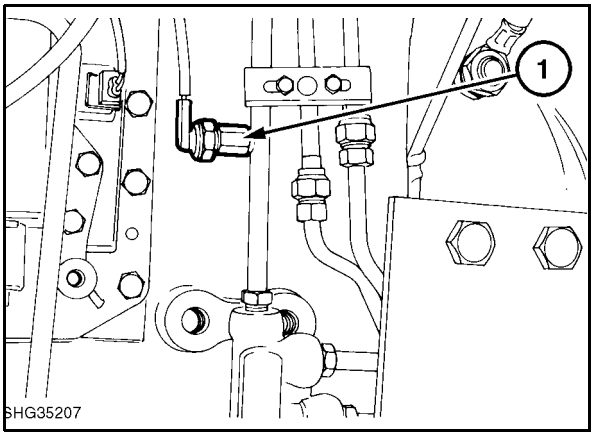

110

2. Install 0–400 lbf/in^2 pressure gauge FT. 8616, Figure 111.

3. Set engine speed to 2100 rev/min and observe pressure reading. A pressure of 5.5–7 bar (80–100 lbf/in^2) should be recorded.

IMPORTANT: *If a pressure reading was not observed stop the tractor immediately because lubrication oil is not being supplied to the transmission.*

4. Return engine speed to idle.

5. Using a hose clamp (1) restrict the flow of oil through the cooler inlet hose (2), Figure 112.

6. Set engine speed to 2100 rev/min and observe pressure reading. The pressure reading should be approximately 7 bar (100 lbf/in^2).

7. Remove hose clamp restriction from oil cooler hose and observe pressure reading. The pressure reading should decrease to approximately 5.5 bar (80 lbf/in^2).

The pressure reading of 100 lbf/in^2 followed by a reduction to approximately 80 lbf/in^2 indicates that when the oil cooler inlet hose was restricted the cooler bypass valve was operating correctly.

If the cooler bypass valve is not to specification refer to the Oil Cooler and Cooler By–pass Valve Chapter in this Part of Repair Manual.

The reduction in pressure when the cooler inlet hose restriction was removed indicates that the oil cooler is not blocked.

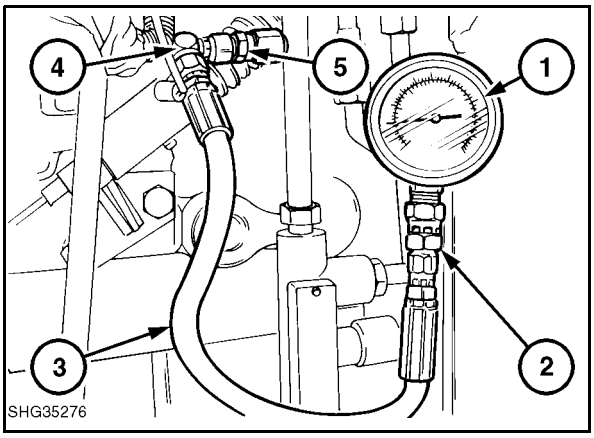

Oil Cooler and Bypass Valve Pressure Test 111

1. Pressure Gauge FT. 8616 or FNH 06653
2. Adaptor FT. 8503–8
3. Test Hose 83936707
4. Elbow 86512933
5. Adaptor 4FT. 850 ($^1/_4$–18NPSF to $^7/_{16}$–20 JIC)

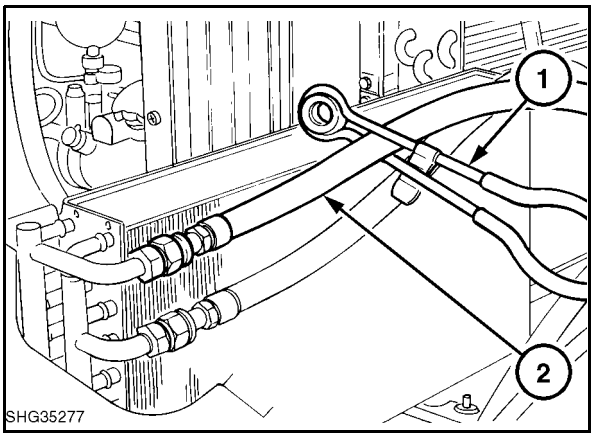

112

HYDRAULIC LIFT ASSEMBLY WITH ELECTROLINK™ FOR TRACTORS WITH VARIABLE DISPLACEMENT CLOSED CENTRE LOAD SENSING HYDRAULIC PUMP

CAUTION: *Observe the following precautions when arc welding on tractors installed with electronic draft control*

- Where possible, disconnect the part or implement to be arc welded from the tractor.
- Disconnect both battery cables from the battery. Isolate the cable ends to avoid contact with each other and the tractor.
- Position the welder earth (ground) clamp as close to the welding area as possible.
- If welding is to be carried out in close proximity to the electronic draft control Processor then the Processor should be removed from the tractor.
- Never allow welding cables to lay on, near or across any electrical wiring or electronic component while welding is in progress.

SPECIFICATIONS

MAXIMUM LIFT CAPACITY

New Holland test results to OECD criteria–links horizontal, maximum hydraulic pressure:

		TS90	TS100	TS110
Without Assist Rams				
at link ends	lb	6712	6712	n/a
	kg	3045	3045	n/a
24 in. to rear of link ends	lb	5190	5190	n/a
	kg	2354	2354	n/a
With One Assist Ram				
at link ends	lb	9904	9904	9904
	kg	4492	4492	4492
24 in. to rear of link ends	lb	7484	7484	7484
	kg	3395	3395	3395
With Two Assist Rams				
at link ends	lb	n/a	n/a	13001
	kg	n/a	n/a	5897
24 in. to rear of link ends	lb	n/a	n/a	9957
	kg	n/a	n/a	4516

VALVE SETTINGS

Lift Cylinder Relief Valve 2850–3050 lbf/in^2 (197–210 bar)

GASKET SEALER

New Holland Flexible Gasket Sealant, Part No. 82995770 (50 ml) 82995771 (300 ml)

TORQUES

= Nm

= lbf ft

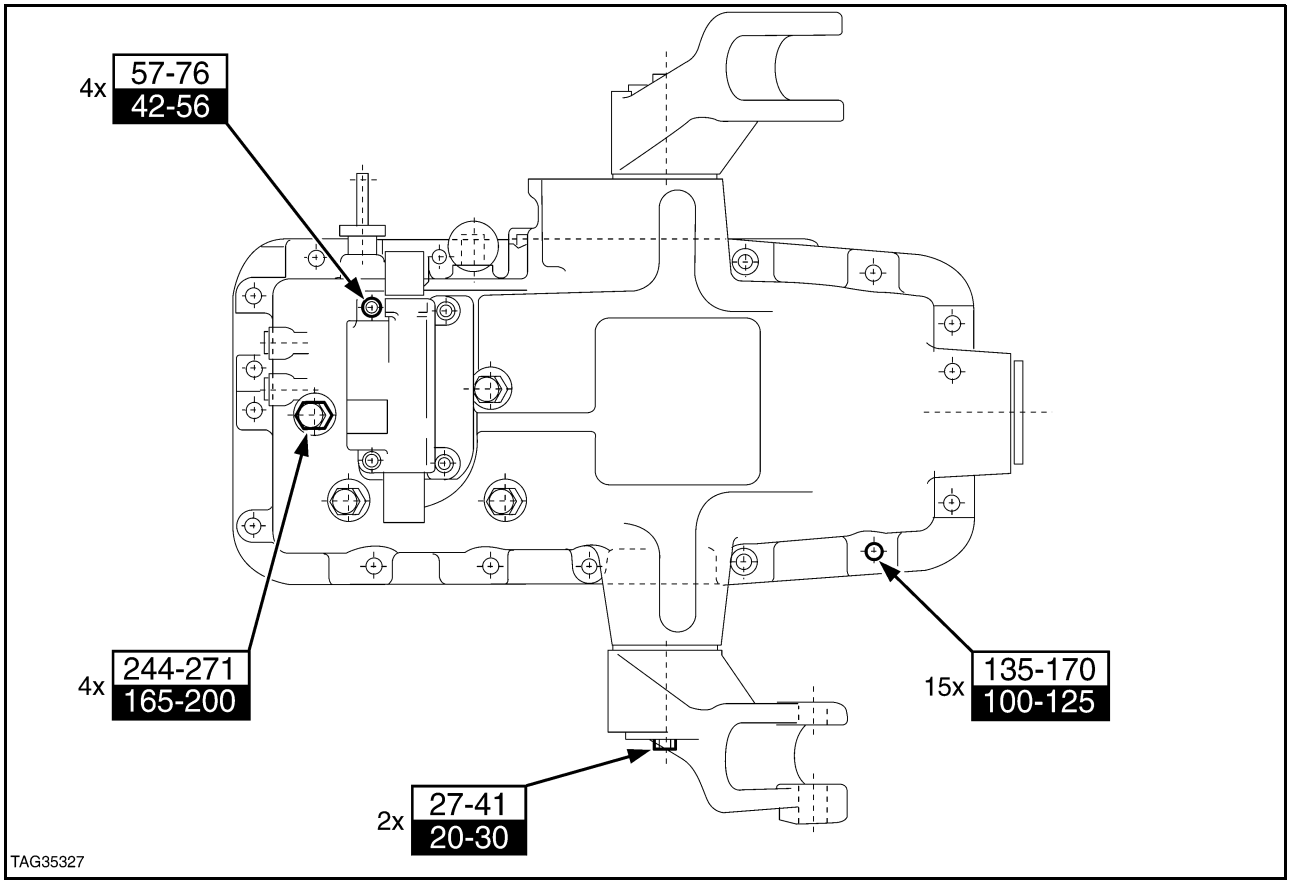

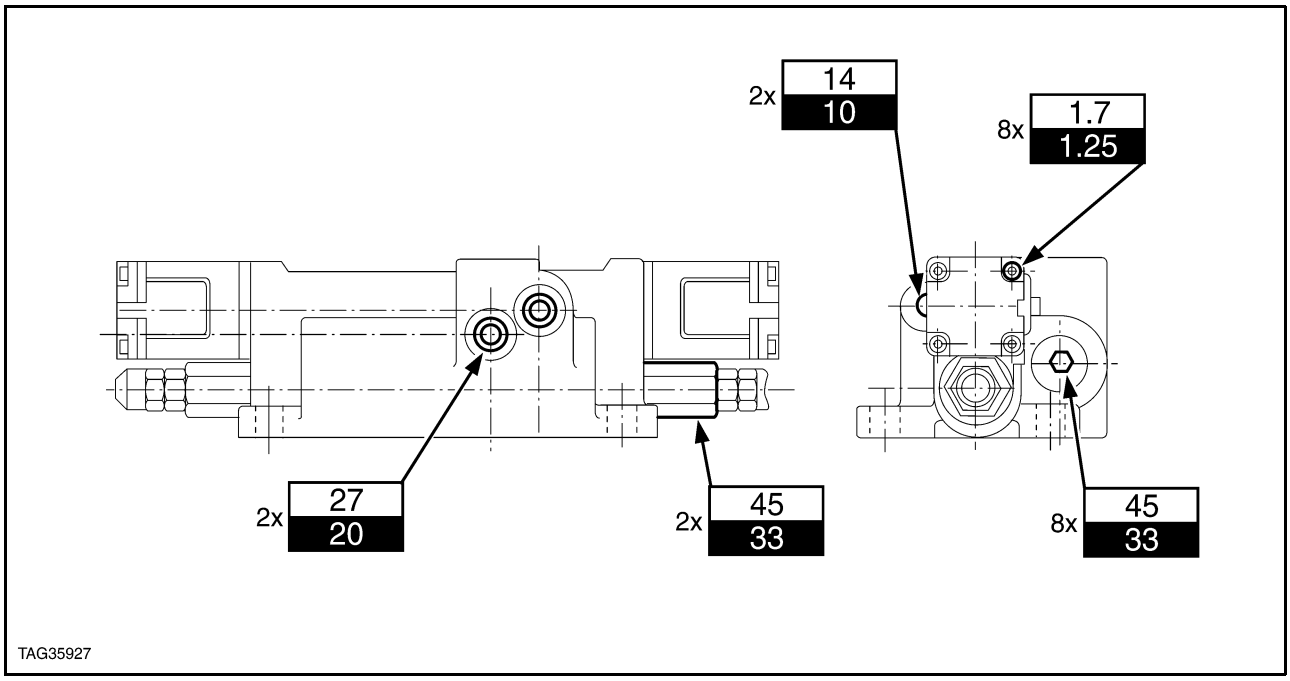

Lift Cylinder Relief Valve Torque 75-90 lbf ft (102-122Nm)

HYDRAULIC LIFT ASSEMBLY WITH ELECTROLINK (ELECTRONIC DRAFT CONTROL)-DESCRIPTION AND OPERATION

General

The objective of a tractor draft control system is to provide a means of accurately controlling the soil penetration depth of a fully or semi mounted implement. One method of providing fixed depth control is to take advantage of the fact that draft loading increases with implement depth. If a fixed implement draft is maintained a fixed implement depth will result, providing tractor speed and type of soil being worked remain constant.

In addition to providing draft control, it is also necessary to provide a system where the implement or hydraulic links can be maintained at a position relative to the tractor regardless of draft on the implement. This method of maintaining the implement position is called position control.

On TS Series tractors control of implement draft can be achieved by either mechanical or electrical means. This Chapter describes the operation of both position and draft control when controlled electronically.

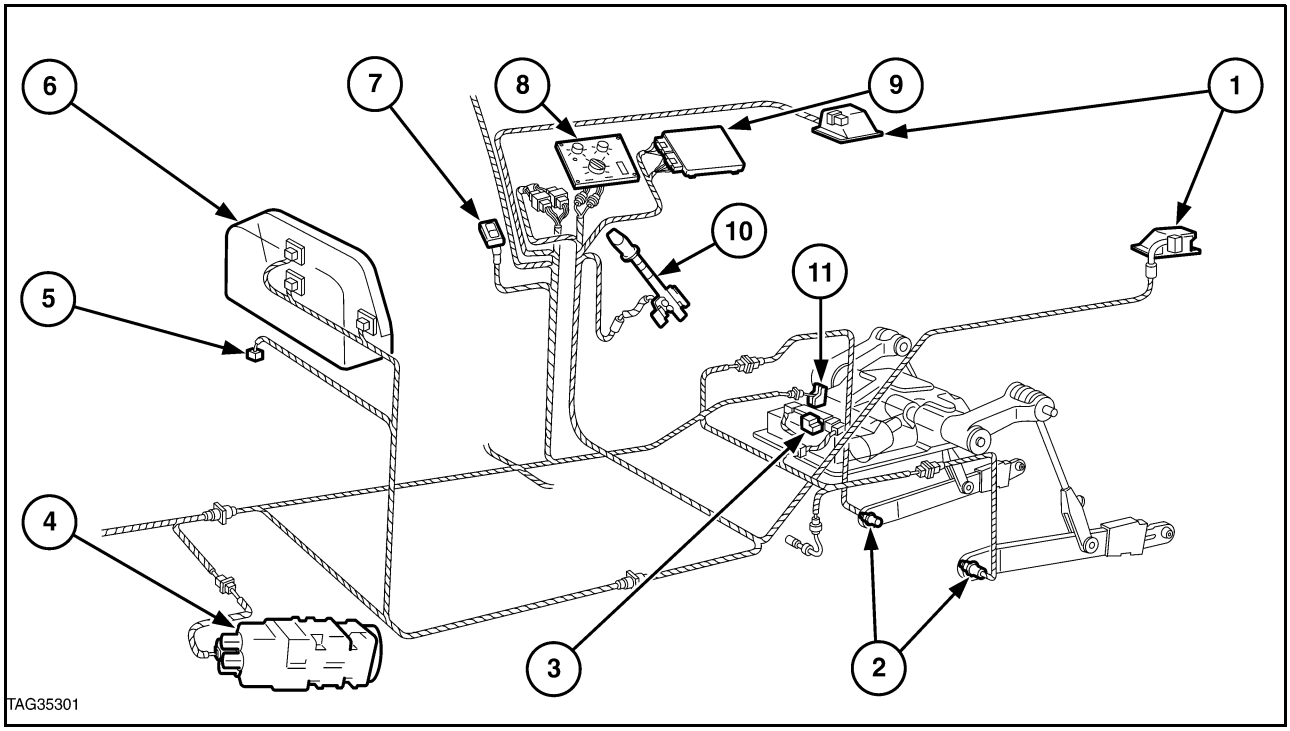

Hydraulic Lift Assembly with Electronic Draft Control 113

1. External Lift Lower Switch
2. Load Sensing Pins
3. Hydraulic Control Valve
4. Performance Monitor Radar
5. Service Diagnostic Connector
6. Instrument Panel
7. Fast Raise/Lower Switch
8. Hydraulic Control Panel
9. Processor
10. Lift Control Lever
11. Lift Arm Position Sensing Potentiometer

The principle of ElectroLink, hereinafter called electronic draft control, is to sense draft variations through two sensor pins in the lower links and using a Processor translate these variations to the hydraulic system to raise and lower the links, maintaining a constant draft loading.

The smoothness and accuracy provided during operation gives this system a clear advantage over conventional mechanical systems.

Figure 113, details the principle component parts of the hydraulic lift assembly with electronic draft control.

Processor

The micro Processor is the management system for the hydraulic lift assembly with electronic draft control and is also used to control the electronic functions of the 16 x 16 Electro Shift and 12 × 12 Dual Command transmissions.

The Processor (1), Figure 114, is housed in a protective casing in the control console and connects to the electrical harness via two multi-pin connectors. The Processor contains no serviceable parts and requires direct replacement when faulty.

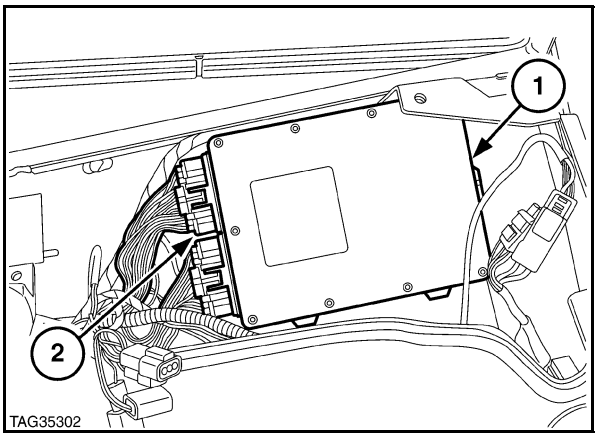

114

While the electronic draft control and 16 x 16 electro-shift transmission share the same Processor both systems operate independently. It is, therefore, possible for a tractor to be installed wiProcessorth a but not equipped for electronic draft control.

The Processor receives electronic signals from the operator controls, lift arm position sensing potentiometer and lower link load sensing pins which it then converts to an input signal to the hydraulic lift, solenoid operated control valve.

In addition to controlling the hydraulic system the Processor has a self diagnostic capability. When the Processor senses that the system is not functioning correctly an error code is generated ans tored in the Processor memory. For a full list of error codes and how to retrieve them, refer to "Fault Finding and Repair" in this Chapter.

Load Sensing Pins

The load sensing pins sense draft variations applied by an implement on the lower links.

Each load sensing pin, Figure 115, consists of a hollow metal tube (1) containing a circuit board (4) and load sensing core (2). Within the core material are three wire coils (3) supported by metal rods. The coils are energised by the 8.5 volt supply and create a stable pattern of magnetic flux within the core.

The outer casing of the pin is made from a metal with unique electromagnetic properties. When the metal is subjected to a shear force, which is centered on the waisted section of the pin (5), the natural magnetism of the pin casing changes, which distorts the magnetic flux pattern of the core and is transformed into an electrical output signal. This signal which is proportional to the draft load acting on the implement is then received by the Processor.

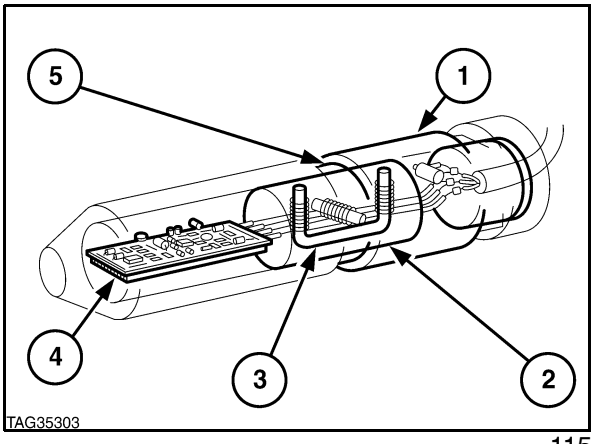

Load Sensing Pin

115

1. Metal Tube
2. Load Sensing Core
3. Wire Coil (3 off)
4. Circuit Board
5. Waisted Section

To ensure that the load sensing pins only sense draft forces and not forces due to the weight of the implement, they are designed to only react to shear forces in the horizontal plane. It is, therefore, essential that the pin (2) cannot be incorrectly fitted and this is achieved by using a special clamp (1) which ensures correct installation, Figure 116.

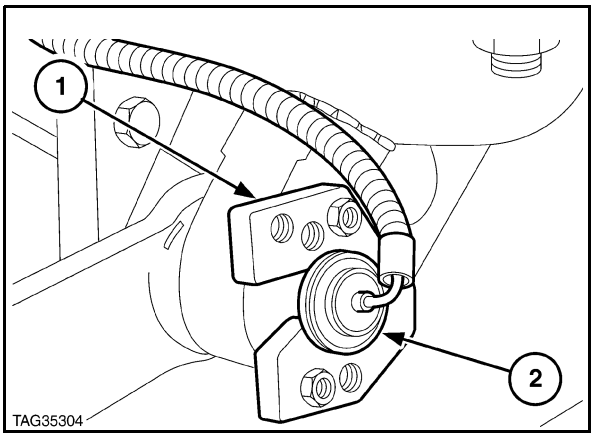

116

Hydraulic Lift Assembly Control Valve

The hydraulic lift assembly control valve (1) is a proportional solenoid operated valve located on top of the hydraulic lift assembly, Figure 117. The valve responds to pulse width modulated signals from the Processor to direct pump pressure oil, to and from the hydraulic lift cylinder, in direct proportion to the degree of lift required.

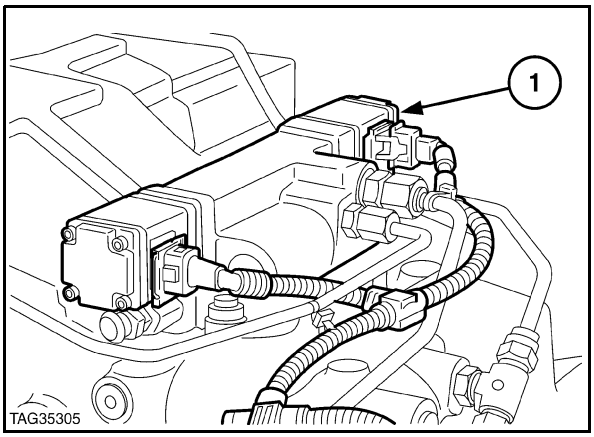

117

CONTROLS

The electronic draft and position control system is operated from a console to the right of the operator's seat, Figure 118. Each of the variably adjustable controls is directly attached to a potentiometer whose change in resistance, when operated, is sensed by the Processor and contributes to the input signal which operates the hydraulic control valve.

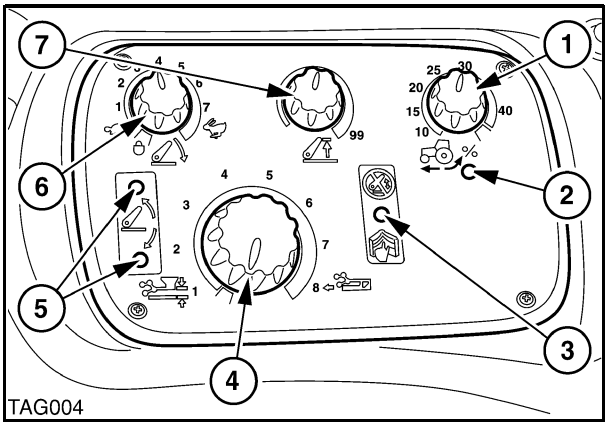

118

Hydraulic Control Panel

1. Slip Limit Control (option)
2. Slip Limit 'On' Indicator
3. Status Indicator
4. Position/Draft Sensitivity Knob
5. Control Valve Solenoid operating lamps
6. Drop Rate Control Knob
7. Height Limit Control

The function of each of the controls is as follows:–

The position/draft sensitivity knob (4) selects full position control, maximum draft control or a mixture of the two allowing selectable sensitivity in draft control according to operating needs.

The drop rate control (6) is provided to limit the rate of drop of the hitch and functions whenever the implement is raised out of the ground.

The height limit control (7) restricts the maximum height the lift arms can be raised, to prevent large implements from striking the rear of the cab or platform. This control restricts the lift height when either the lift control lever or external lift/lower switches are used.

The slip limit control (1) (where fitted) limits the amount of wheel slip. The indicator light (2) is illuminated when the lift arms are responding to an excessive slip condition.

The status indicator (3) is flashed when a malfunction identified by the Processor occurs in the system. The status indicator is continuously illuminated when the hitch is disabled.

As with mechanical draft control hydraulic systems, the raising and lowering of the lift arms is controlled by a lever in the control console to the right hand side of the operator's seat, (2) Figure 120. The lift control lever is of a low effort type having only an electronic coupling to the hydraulic system in the form of a potentiometer.

The raise/lower switch (1) Figure 120, enables the operator to rapidly raise the implement to the position set by the height limit control and to lower the implement back down to the position set by the lift control lever, without disturbing the settings. Thus, the operator is able to raise the implement at the headland and return the implement to the same operating conditions.

The switch has 3 positions. To raise the implement quickly, press the top of the switch. The implement will raise to the height set by the height limit control.

Move the switch to the central position and the implement will lower at the rate set by the drop rate control knob and stop when it reaches the depth set by the lift control lever.

Press and hold the bottom of the switch and the implement will lower at the rate set by the drop rate control knob, until it contacts the ground. The drop rate and the lift control lever settings will then be overridden and the implement will quickly penetrate the ground, rising to the pre-set depth when the switch is released. (The switch is spring-loaded to return to the central position, when released).

NOTE: *The implement will not lower if ground speed exceeds 15 MPH (24 km/h)*

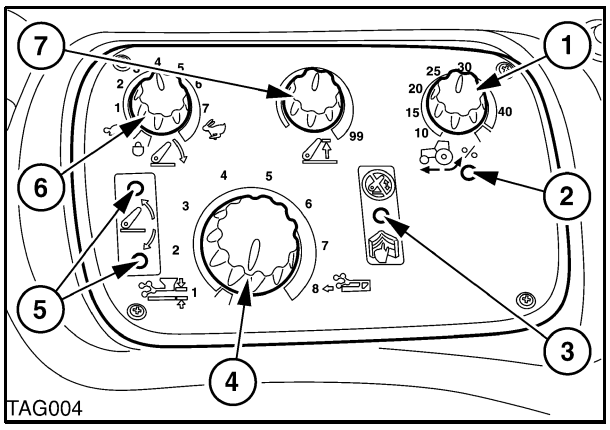

119

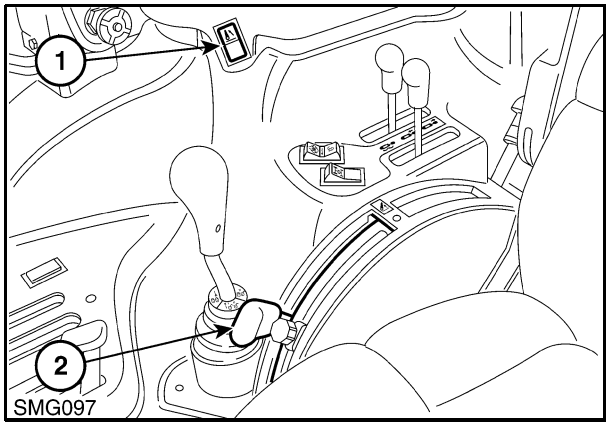

120

External Hydraulic Power Lift Controls

An external, rocker type switch (1) is provided on each rear light assembly, Figure 121. The switches are of a three-position designed, spring-loaded to return to the central, off position.

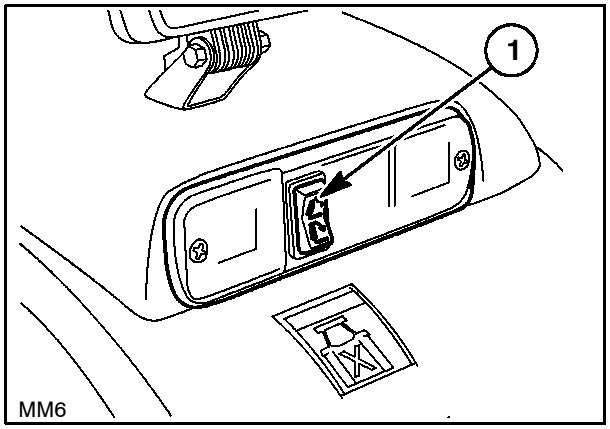

121

WARNING: *Do not stand on or near the implement or between the implement and tractor when operating the external hydraulic power lift controls.*

Before leaving the tractor to operate the external switches:

- Move the gearshift levers to neutral.
- Disengage the P.T.O.
- Apply the parking brake.

With the engine running move the hand throttle lever to the low idle position (fully rearwards) and push the hydraulic lift control lever fully forward.

WARNING: *Before using the external hydraulic power lift switches, ensure that no person or object is in the area of the implement or 3-point linkage*

Never operate the external switches while standing:

- *Directly behind the tractor or tyres.*
- *Between the lower links.*
- *On or near the implement.*

WARNING: *Never extend arms, legs, any part of the body or any object into the area near the 3-point linkage or implement while operating the external switch.*

Never have an assistant working the opposite set of controls. When moving to the opposite set of controls, move around the tractor or implement. Do **not** cross between the implement and tractor.

The operator must only activate the external switches while standing to the side of the tractor (outboard of the rear tyres) - see Figure 122

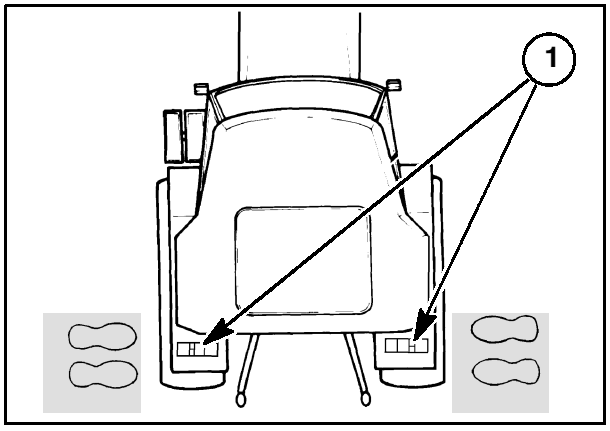

122

Pressing the upper part of the rocker switch (1), Figure 123, will cause the lift linkage to raise slowly. Pressing the lower part will cause the linkage to lower. When the lower links align with the implement, release the switch and attach the implement to the 3-point linkage in the normal way.

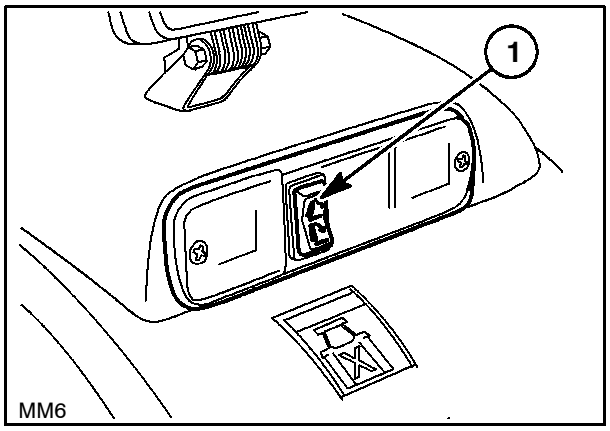

123

To transfer control of the hydraulic power lift back to the lift control lever, set the raise/lower switch to the central position, pull the lift control lever fully rearwards and push forward again, more slowly. The 'hitch enabled' symbol will display in the instrument pane, indicating that the 3-point linkage is in phase with the lift control lever.

IMPORTANT: *When control of the 3-point linkage is transferred back to the lift control lever, an attached implement may raise fully and damage the rear of the cab. Operators should be aware of this and take appropriate action to stop raising before full lift height is reached. Adjust the height limit control knob as described under* **Position Control Operation**.

Transport Lock and Dynamic Ride Control

When transporting equipment of the 3-point linkage, implement bounce can lead to lack of steering control at transport speeds. With Ride Control selected when the front wheels hit a bump, causing the front of the tractor to rise, the hydraulic system will immediately react to counter the movement and minimise implement bounce to provide a smoother ride.

To engage Ride Control, select Position Control by turning the knob (2), Figure 124, fully anti-clockwise. Fully depress the symbol end of the raise/lower switch to raise the implement to the height set by the height limit control (1).

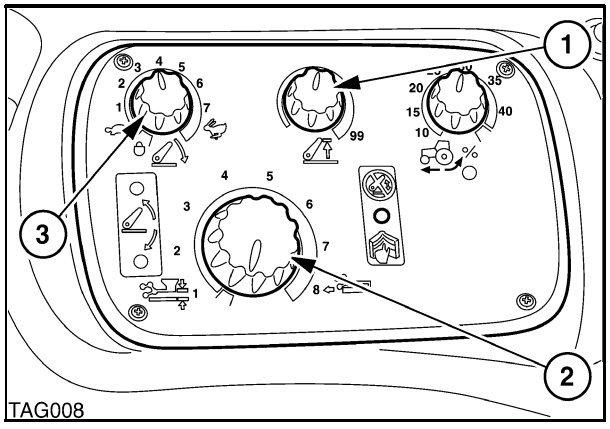

124

Turn the drop rate control knob (3) fully anti-clockwise to the transport lock position (padlock symbol).

Ride Control will only operate at speeds above 8 kph (5MPH). When tractor speed exceeds 8 kph (5MPH), the implement will drop by 4 - 5 points (as displayed on the instrument panel) as the hydraulic system makes corrections to counteract implement bounce. When tractor speed falls below 8 mph (5MPH) the implement will raise again to the height set by the height limit control and Ride Control will become inoperative.

In addition to the operator controls a series of liquid crystal displays (LCD's) or warning lights indicating the operating condition of the electronic draft control system are provided within the instrument panel.

Figure 125, illustrates the LCD displays incorporated in the fully electronic instrument panel.

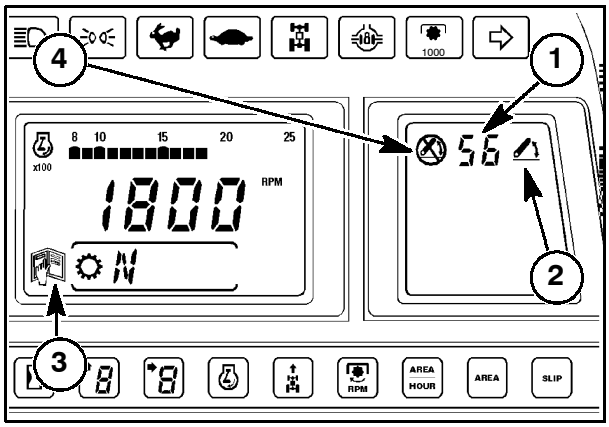

Electronic Instrument Panel 125

1. Implement Position/Diagnostic Repair Code (LCD)
2. Hitch Enabled Symbol (LCD)
3. 'Read Your Manual' Symbol (LCD)
4. Hitch Disabled Symbol (LCD)

Figure 126, illustrates the LCD/warning light displays incorporated in the analogue electronic instrument panel.

The function of these displays are as follows:-

Implement Position/Diagnostic Repair Code

The digital display on the instrument panel indicates the position of the lower links over a scale of '0' to '99'. A display of '0' indicates that the links are fully lowered and a display of '99' indicates they are fully raised. On tractors with electronic instrument panel the hitch enabled symbol will be illuminated when the hitch is in phase with the lift control lever.

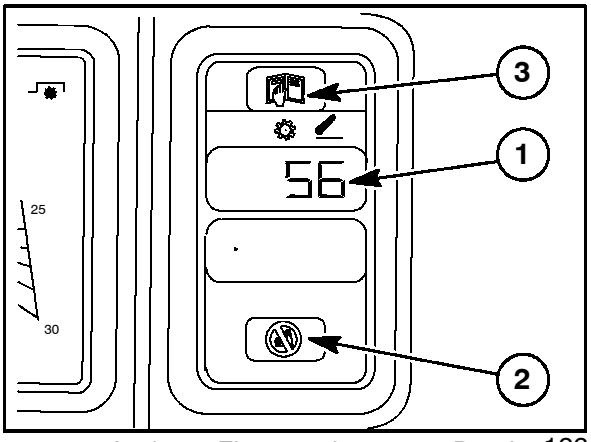

Analogue Electronic Instrument Panel 126

1. Implement Position/Diagnostic Repair Code (LCD)
2. Hitch Disabled Warning Light
3. 'Read Your Manual' Light

The 'hitch disabled' warning light/LCD symbol signifies that the lift control lever position does not correspond to the position of the lower links and that unintentional movement of the lower links cannot occur. The 'hitch disabled' warning will display if:-

- The lift control lever has been inadvertently moved with the engine stopped.
- The lift control lever has been pushed fully forward in order to transfer control of the hydraulic power lift to the external switches.

NOTE: *To put the lift control lever (2) back into phase with the lower links position, put the raise /lower' switch (1), Figure 127, in the central position, pull the lever fully rearwards and push forward again, more slowly, to allow the lift linkage to lower.*

Re-aligning the position of the lift control lever to the lift arms is termed 'capturing' the lift.

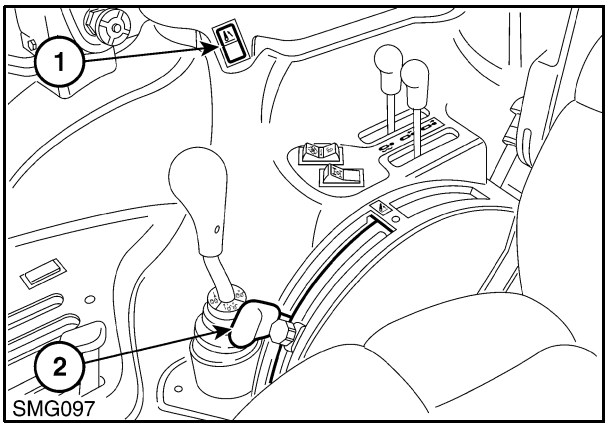

127

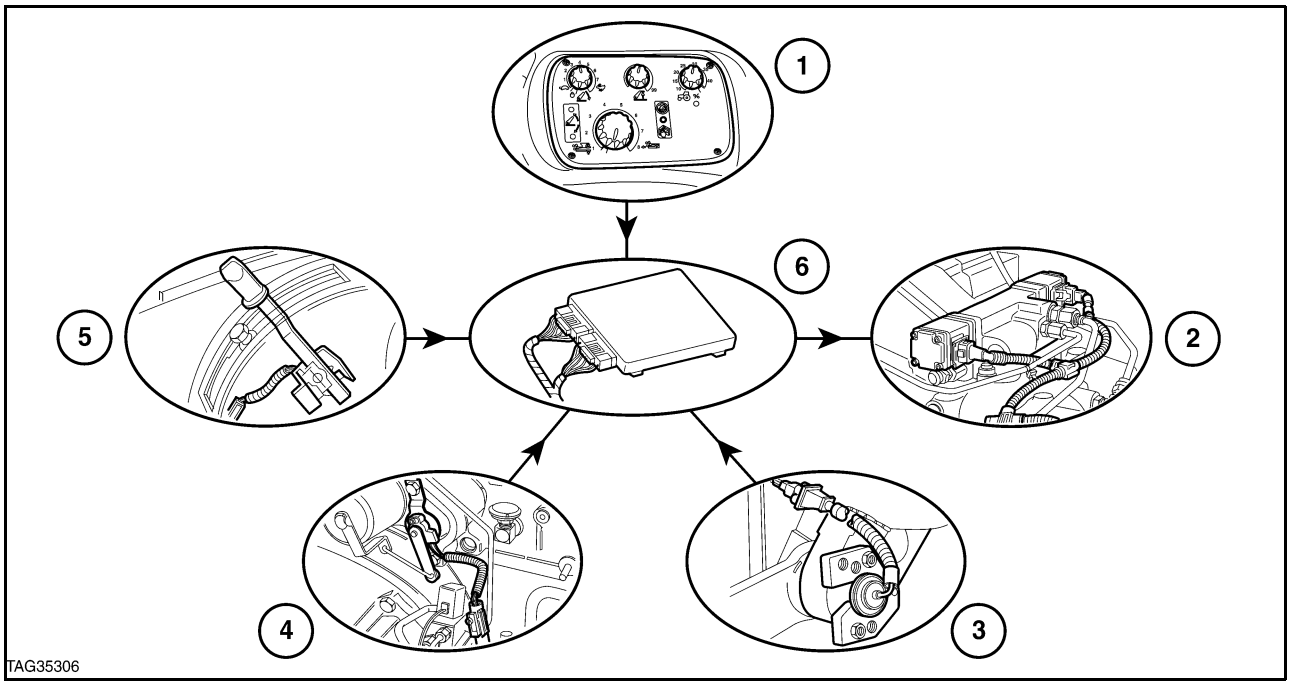

Position/Draft Control Schematic 128

1. Position/Draft Sensitivity Mix Control on Operator Control Panel
2. Solenoid Operated Hydraulic Control Valve
3. Implement Draft Feedback Signal from Load Sensing Pins
4. Hydraulic Lift Arm Position Feedback Signal from Lift Arm Position Sensing Potentiometer
5. Lift Control Lever
6. Processor (Computes Input Signal to Solenoid Operated Hydraulic Control Valve)

OPERATION

Figure 128, illustrates in a block schematic form the flow of electronic signals to and from the hydraulic system, to raise and lower the hydraulic lift in accordance with operator position and draft control requirements.

The electronic draft and position control system is operated from a console to the right of the operator's seat.

Electronic signals to the Processor for raising and lowering the hydraulic lift assembly in accordance with position and draft control requirements, are received from four main sources. These are the lift control lever, the lift arm position sensing potentiometer, the two load sensing draft control pins in the lower links and the draft/position sensitivity controls on the hydraulic control panel.

Additional signals from the drop rate and maximum lift height controls and wheel slip control (where fitted) also contribute towards the computation of the input signal.

When the lift control lever (1) is operated to raise or lower the lift arms the resistance of the potentiometer (2) at the base of the lift control lever, Figure 129, changes and is sensed by the Processor. The computer now transmits a signal to the appropriate raise or lower solenoid on the hydraulic lift control valve, which directs oil to raise or lower the hydraulic lift.

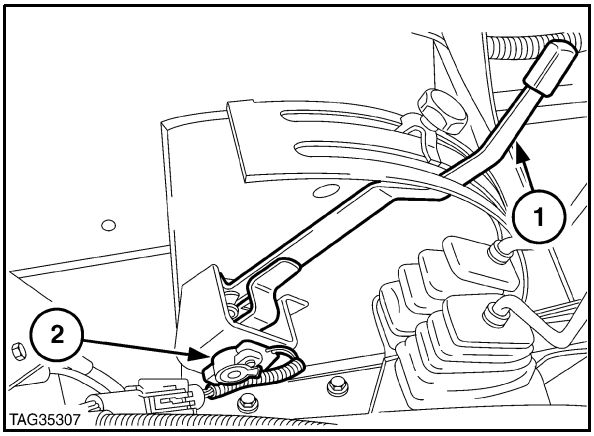

129

A position feedback signal is received from the lift arm position sensing potentiometer (1), mounted on the right hand lift arm, Figure 130. The control signal from the Processor to the appropriate raise or lower solenoid on the hydraulic lift assembly control valve is turned 'Off' when the lift arms have moved to the desired position.

In addition to raising and lowering the implement the lift control lever also automatically generates a draft command. The further forward the lever is pushed the greater the draft load which is commanded.

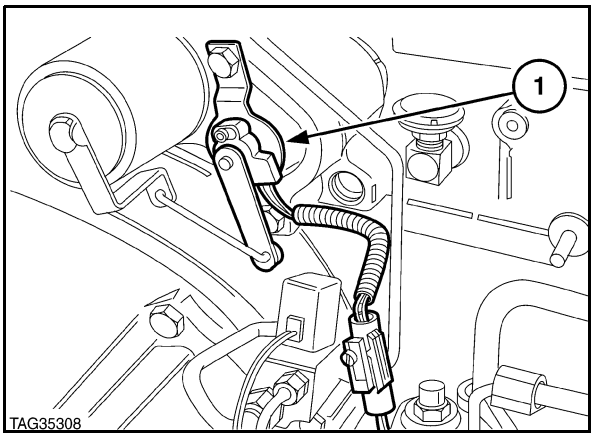

130

During operation of the tractor, assuming that draft control has been selected, draft forces imposed by the implement through the lower links are sensed by the two special load sensing pins. Dependent on these draft loadings electrical signals from each of the pins are also directed to the Processor. The computer averages the signals from both pins and transmits a revised pulse width modulated signal to the appropriate hydraulic control valve solenoid to raise or lower the hydraulic lift, maintaining the constant draft loading selected by the operator using the lift control lever.

When the position/draft selector knob is set to full position control, No 1 on the scale, full position control is selected and the draft loads on the implement, as sensed by the lift pins, have no effect on the control of the hydraulic lift. At the other extreme, when the position/draft mix knob is set to the maximum draft sensitivity setting, No. 8 on the scale, the draft loads on the implement have maximum effect on the control of the hydraulic lift. Intermediate setting of the position/draft mix varies the draft sensitivity between the maximum and minimum limits.

To increase the degree of control of the lift arms when they are being raised to the top of their travel and prevent the hitch from driving hard against the mechanical stops, the Processor automatically and gradually adjusts the draft control sensitivity from that set by the operator to maximum position control. Because the implement would be raised out of the ground at this point of lift the automatic change from draft to position control has no effect on the use of the implement.

When the hydraulic lift is being lowered the computer also takes into consideration the setting of the drop rate sensitivity knob and adjusts the value of the signal to the control valve lower solenoid accordingly to maintain the desired rate of lowering. When the implement is in the ground, the drop rate control is disabled. Thus the implement may be lowered to the ground in accordance with the drop rate setting and yet still respond properly to draft variations once the ground has been contacted.

When the lift control lever is moved to the maximum raise position the setting of the height limit control governs the maximum height to which the hydraulic lift arms can be raised.

When a tractor is operated in draft control and under poor traction conditions the situation can arise where as the tyres slip, the ground speed and draft forces on the load sensing pins also reduce. The reduction in draft forces signals the Processor to increase the implement to a depth which can ultimately stop the tractor from moving.

On tractors equipped with the 'limited slip' option this condition is overcome by the Processor comparing tractor ground speed and axle speed to calculate wheel slip. When wheel slip exceeds the pre-set limit set by the operator using the slip limit control, the Processor raises the lift arms irrespective of draft loading until the wheel slip decreases. As long as slip is less than the limit set by the operator the lift will operate in the normal Electronic Draft Control manner.

In the event of failure of either the lift control lever, lift arm position sensing potentiometer or height limit control potentiometer, the hydraulic lift can still be operated by the external switches on the rear fenders.

Operation Of Hydraulic Lift Assembly Control Valve

The following description on the operation of the hydraulic lift control valve refers to controlling the lift using the lift control lever. The same principal of valve operation, however also applies when the hydraulic lift is responding to neutral, raise or lower signals from the external fender switches or load sensing pins in the hydraulic lower links.

The solenoids on either end of the hydraulic control valve, respond to the pulse width modulated signals from the Processor and direct oil from the hydraulic pump to and from the hydraulic lift cylinder in direct proportion to the rate of lift required.

The solenoid on the left hand end of the valve causes the lift arms to raise and similarly the solenoid on the right hand end causes the arms to lower. Because the solenoids are actuated with a variable voltage drive a controlled flow of oil to the lift cylinder is provided.

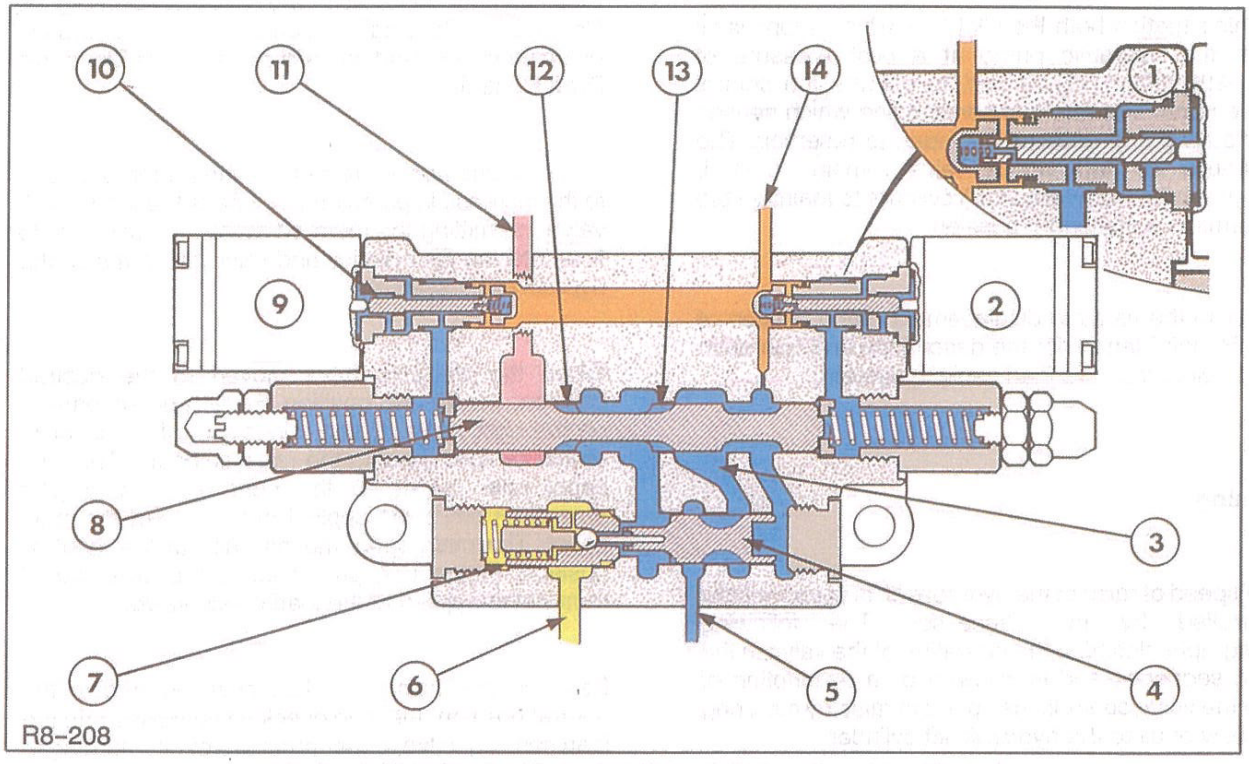

Electronic Draft Control Hydraulic Lift Control Valve Operation–Neutral 131

1. Pilot Spool
2. Solenoid (Raise)
3. Return to Reservoir Port
4. Load Sensing Valve
5. Load Sensing Line To Variable Displacement Pump
6. To Hydraulic Lift
7. Load Check Valve
8. Main Spool
9. Solenoid (Lower)
10. Pilot Spool
11. Pump system Pressure Inlet
12. Main Spool Inlet Metering Land
13. Main Spool Return To Reservoir Metering Land
14. Pilot Pressure Inlet

Pump System Pressure Oil (Variable)

Pilot Pressure Oil 265 lbf/in^2 (18 bar)

Return to Reservoir Oil

Trapped Oil

Neutral

When the hydraulic lift arms are held in a stationary position, the hydraulic lift control valve is in 'Neutral' and the Processor is not sending raise or lower signals to the control valve solenoids. In the neutral condition the spring force applied to each end of the main spool holds the spool in a central position, preventing oil flow from the pump to the hydraulic lift, Figure 131.

In this situation both the pilot line, which supplies oil from the hydraulic pump at a pilot pressure of 250–280 lbf/in^2 (17–19 bar), to operate the control valve spool and the load sensing line which senses hydraulic pump demand are open to reservoir. The hydraulic lift load check valve remains seated, trapping oil in the hydraulic lift cylinder to maintain the lift arms in a stationary position.

Refer to the variable displacement pump section of this Repair Manual for the description and operation of the closed centre load sensing system.

Raising

The speed of raise of the hydraulic lift is automatically controlled by the Processor. The following paragraphs describe the operation of the valve in the raise sequence and is followed by a description of how the valve controls the speed of raise by metering the flow of oil to the hydraulic lift cylinder.

In simple terms, when the lift control lever is moved to raise the hydraulic lift, a signal is sent to the raise solenoid on the control valve. The armature in the solenoid reacts to the signal and the pilot spool is moved to the left, allowing pilot pressure from the hydraulic pump to be applied to the end of the main spool, Figure 132.

The pilot pressure applied to the end of the main spool moves the spool to the left directing oil from the hydraulic pump, across the inlet metering land to the load check and load sensing valves. As pressure in the gallery feeding these valves increases the load sensing valve moves to the right, closing the load sensing line return to reservoir port and allowing the pressure of the metered oil flow to be sensed in the load sensing line. The pressure in the load sensing line is now applied to the flow compensating valve in the variable displacement pump which signals the pump to increase output. Refer to "Chapter 1 Variable Displacement Hydraulic Pump Assembly with Closed Centre Load Sensing" for a description and operation of the pump installed on tractors fitted with Electronic Draft Control.

The resulting rise in pressure of the metered oil due to the increase in pump output, opens the load check valve, permitting the metered system pressure oil to flow into the lift cylinder and raise the arms of the hydraulic lift assembly.

When the lift arms have moved to the desired position, the lift arm position sensing potentiometer on the right hand lift arm, signals the Processor to switch off the signal to the raise solenoid. The pilot spool now moves to the right, preventing pilot pressure from being applied to the end of the main spool. The main spool moves back to the 'neutral' position, Figure 131, preventing pump pressure oil from being applied to the load check valve.

Because the main spool has now returned to the neutral position, the load check valve closes and the load sensing valve, under pressure of oil returning to reservoir, moves to the right, opening to reservoir the load sensing line from the hydraulic pump.

The load check valve has now trapped the oil in the lift cylinder, holding the lift arms in the desired position, while the pressure in the load sensing line can 'bleed' off to reservoir, signalling the variable displacement pump to reduce output.

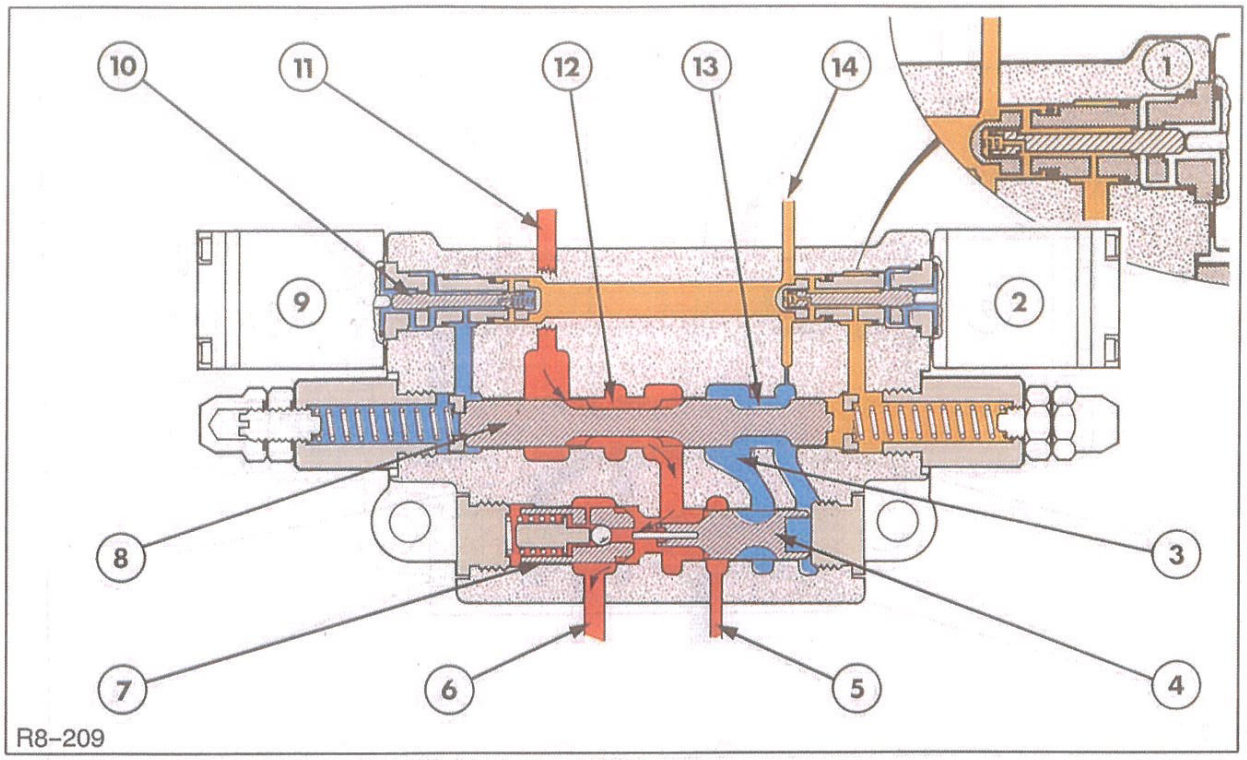

Electronic Draft Control Hydraulic Lift Control Valve Operation–Modulated Raise 132

1. Pilot Spool
2. Solenoid (Raise)
3. Return to Reservoir Port
4. Load Sensing Valve
5. Load Sensing Line to Variable Displacement Pump
6. To Hydraulic Lift
7. Load Check Valve
8. Main Spool
9. Solenoid (Lower)
10. Pilot Spool
11. Pump system Pressure Inlet
12. Main Spool Inlet Metering Land
13. Main Spool Return to Reservoir Metering Land
14. Pilot Pressure Inlet

Pump System Pressure Oil (Variable)

Pilot Pressure Oil 265 lbf/in^2 (!8 bar)

Return to Reservoir Oil

The speed of raise of the hydraulic lift is automatically controlled by the Processor which modulates the signals to the raise solenoid proportionally to the degree of raise required.

The modulated signal automatically and continually varies the raise solenoid pilot spool movement and consequently the pilot pressure applied to the end of the main spool. Because movement of the main spool is dependent on the pressure applied on its end face, it can be seen that the modulated pilot pressure causes the main spool to oscillate and continually 'meter' the flow of oil from the system pressure inlet port across the main spool inlet metering land, Figure 132.

Due to the restriction and consequential pressure drop caused by the metering land, the metered flow of oil varies the speed of lift in accordance with the size and frequency of the modulated input signals to the raise solenoid.

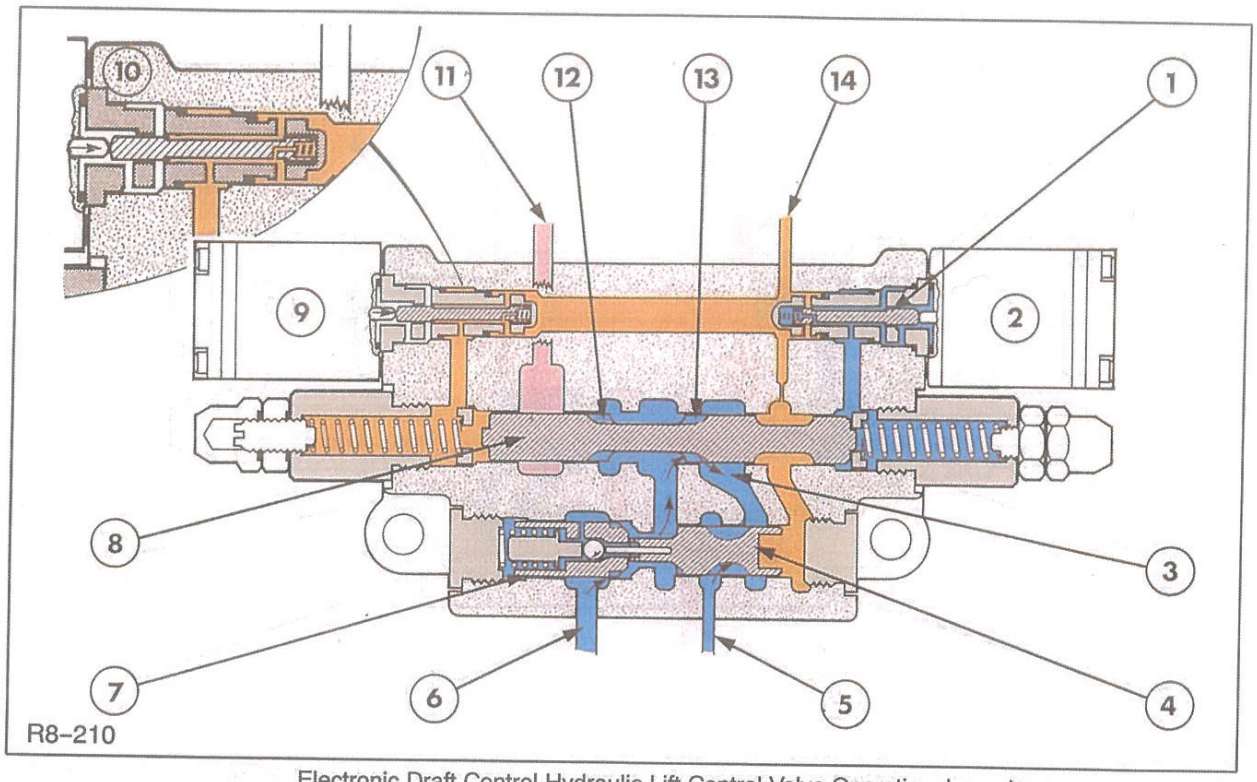

Electronic Draft Control Hydraulic Lift Control Valve Operation–Lowering 133

1. Pilot Spool
2. Solenoid (Raise)
3. Return to Reservoir Port
4. Load Sensing Valve
5. Load Sensing Line to Variable Displacement Pump
6. To Hydraulic Lift
7. Load Check Valve
8. Main Spool
9. Solenoid (Lower)
10. Pilot Spool
11. Pump system Pressure Inlet
12. Main Spool Inlet Metering Land
13. Main Spool Return to Reservoir Metering Land
14. Pilot Pressure Inlet

Pump System Pressure Oil (Variable)

Return to Reservoir Oil

Pilot Pressure Oil 265 lbf/in^2 (!8 bar)

Lowering

When the lift control lever is moved to lower the hydraulic lift, a signal is sent to the lower solenoid on the control valve. As the armature in the solenoid reacts to the signal, the pilot spool is to the right allowing pilot pressure from the hydraulic pump to be applied to the left hand end of the main spool, Figure 133. As the main spool moves towards the right, pilot pressure is applied to the right hand face of the load sensing valve, causing the valve to move to the left, unseating the ball in the load check valve.

The oil trapped behind the check valve can now vent to reservoir and the load sensing valve continues to move forward, unseating the load check valve poppet. The pressurised oil in the lift cylinder now returns to reservoir across the return to reservoir metering land on the main spool, allowing the lift arms to lower at a controlled speed.

The speed of lower on the hydraulic system is pre–set by the operator and automatically maintained by the Processor which modulates the signal to the control valve lower solenoid in accordance with the implement drop rate selected on the operator control panel. The modulated input signal continually varies the lower solenoid pilot spool movement and consequently the pressure applied to the end of the main spool. Because movement of the main spool is dependent on the pilot pressure applied on its end face, the main spool continually oscillates and meters the flow of oil from the lift cylinder, across the return to reservoir metering land of the main spool, giving a controlled rate of lowering.

TROUBLE SHOOTING AND CALIBRATIONS

The transmission / EDC electronic management system has an inbuilt self diagnostic facility which is able to store up to 30 different errors with the hours of occurence. This facility utilises the digital display of either the EIC or AEIC instrument panels to indicate, in coded format, any malfunction in the electrical and electronic circuitry and in the processor.

It should be noted that the self diagnostic capability is generally limited to diagnosis of the electrical and electronic circuitry and related components, however, there are some codes, which can be generated if pressure switch circuits are not closed because of an actual lack of hydraulic pressure.

Any malfunction of the mechanical and hydraulic components must be diagnosed using conventional techniques, performance characteristics and tooling, such as pressure testing equipment. Full guidance for both electrical self diagnosis and conventional diagnosis is contained within this section.

Trouble-shooting and fault finding should always be carried out in a logical and planned sequence, many apparent faults associated with electronic components are often hastily diagnosed and result in the replacement of expensive components. An extra few minutes confirming the apparent fault will result in a more positive and cost effective repair.

Prior to detailed fault finding, items like the earth points and Battery should be cleaned and tested to ensure that they are functioning correctly.

With the use of micro-processors it is often that this item is blamed for any malfunction but the real truth is that this item is usually sound and that the fault is due to poor contacts in the associated connectors.

Each connector illustrated and identified in the wiring diagrams in Section 3 and referred to in the following fault finding procedure, has the same identification reference. For example, the main processor connectors are referred to as Connectors C127 and C128 in the illustration and also referred to as C127 and C128 in the fault finding procedure. Often in the fault finding flow chart the connector and pin are abbreviated and will read, for example, C127-10. The C127 refers to the connector and the 10 to the pin number.

Section 3 contains complete wiring diagrams, connector identifications and a list of circuit numbers as used within the circuit diagrams.

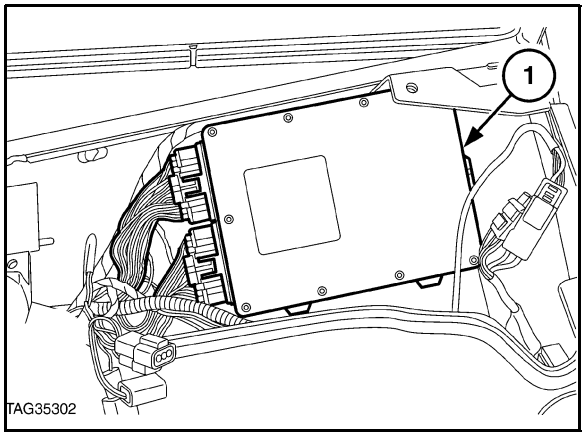

134

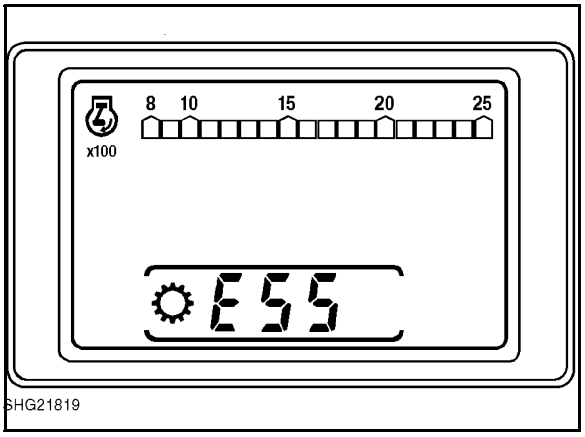

135

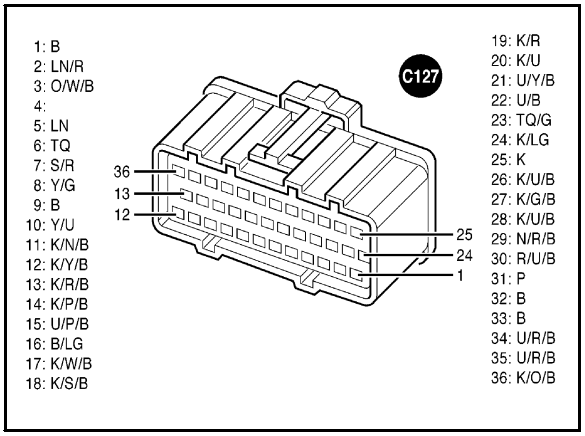

136

Where the fault finding procedure requires checks for continuity a visual inspection of the wiring should be made prior to conducting tests to ensure that obvious 'mechanical' damage has not occurred to the harness or the connectors.

Where possible the inbuilt tractor diagnostics should be utilised to determine the area of the fault.

The 'H' menu mode, described in Section 3, provides several modes to aid diagnosing faults. One particular mode which should be used, before any connections are split, is the H5, switch diagnostics mode. This will provide testing of many switch circuits, including the switch itself. If this mode highlights a fault within a circuit then more detailed fault finding can be directed towards a particular circuit.

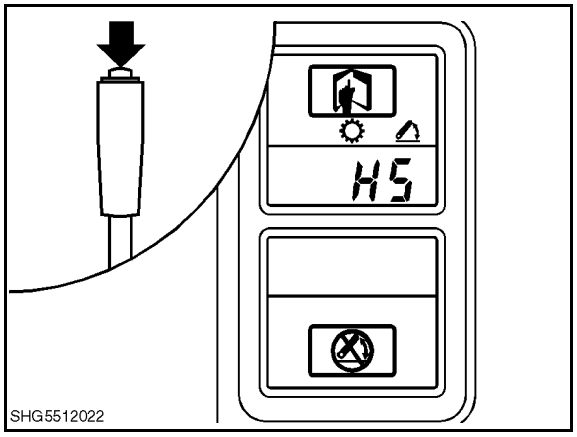

137

A good quality multi-meter is an essential item to perform fault finding. It should be capable of measuring resistance of at least 20,000 ohms and measuring voltage and current. When using the multi-meter it is good practice to select a high range and work downwards to avoid damaging the instrument.

Where possible it is recommended that connectors are probed from the rear, certain connectors like C079, C080 and C081, instrument panel connectors, should always be probed from the rear. Connector terminals should only be removed using the special tools supplied in electrical repair kit, Tool No.4FT.953 and the wires should not require excessive pulling efforts to remove.

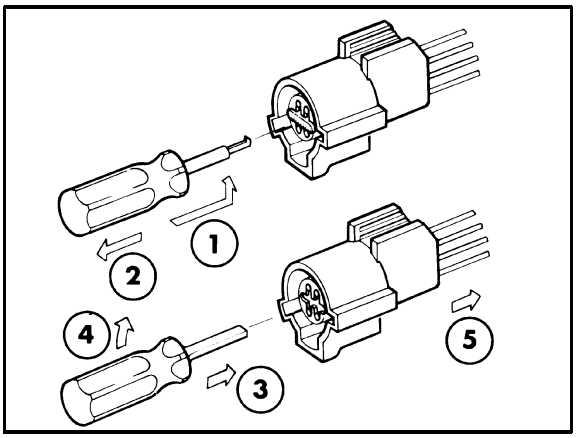

138

Where only front probing is practical it is recommended that Connector test probe kit, Tool No NH.55-125 is obtained. This provides all connector terminal attachments for use with most multi-meters.

IMPORTANT: *Care should be used when using the multi-meter, only use the instrument as instructed to avoid damage to the internal elements of the micro-processor. When checking the continuity of wiring, sensors or switches it is necessary to isolate the electronic micro-processor and ensure the keystart is turned off to prevent possible further damage. The keystart should only be switched on and the processor connected where specifically instructed in the fault finding procedure.*

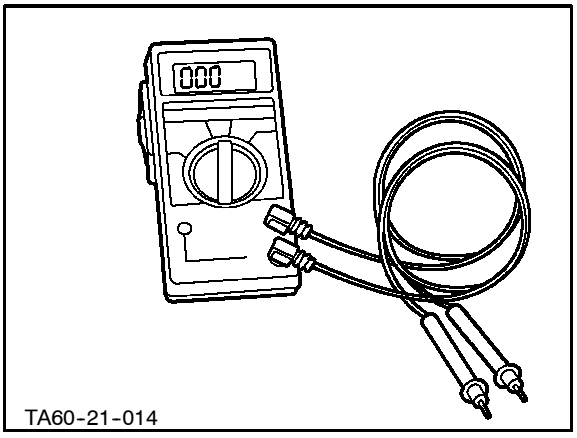

139

If it is found necessary to clean the connectors a contact spray should be used. DO NOT USE ANY OTHER METHOD FOR CLEANING TERMINALS. Do not use a cleaner that contains Trichloro-ethylene, this solvent will damage the plastic body of the connector. It is preferable to use a cleaner with a Freon T.F. base.

ERROR CODES

The transmission / EDC processor is able to create and store up to 30 error codes with the hours at which they occured and with the number of incidences that a particular error code has occured. Only error codes that prevent the tractor from driving will be displayed to the operator, other non disabling errors will be retreivable by a technician through the H menu mode of the tractor diagnostics.

It should be noted that the hours displayed is not related directly to the hour meter. For example, if the occurence hours shows '10' this indicates that the error occured 10 hours ago, not at 10 hours of operation.

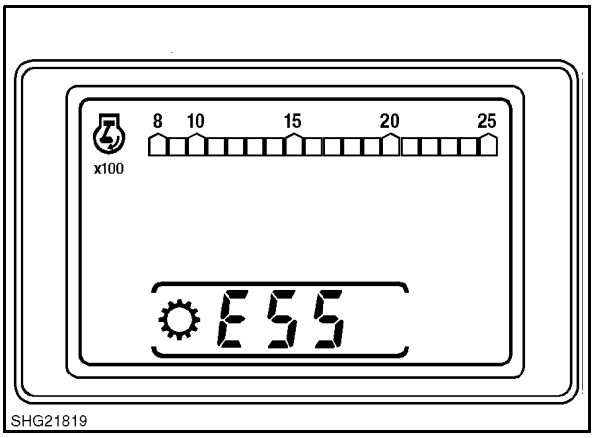

140

The following 'H' menu mode routines are provided to allow access to Error codes:

Hb – Retrieve error codes for viewing.

Hc – Clear processor memory of stored error codes

Hd – View error codes live. This allows normal operation of the tractor with error codes able to display as they occur.

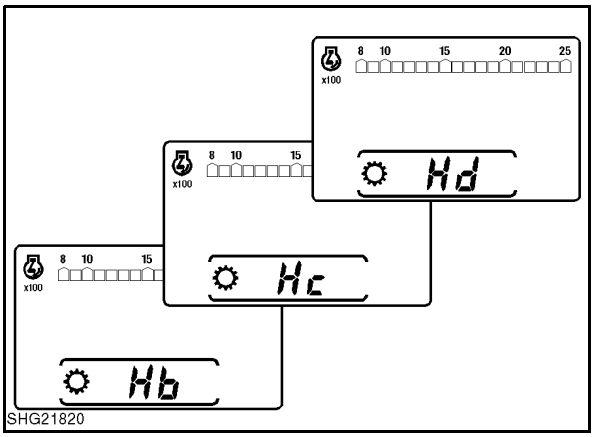

141

A full description of the 'H' menu routines can be found in Section 3.

It should also be noted that after installation of a new processor or after a non volatile memory reset operation ('H' menu mode, H8), that the processor defaults to a 'display all codes' mode for 6 minutes. If no error codes occur during this 6 minute period the processor then reverts to normal operation. If an error occurs during this period the processor will continue to display 'live' error codes until all the errors are removed.

ELECTRONIC DRAFT CONTROL ERROR CODES

Error Code	Error Description	Page
Code 2	Poor or no signal from tractor performance monitor radar	
Codes 3, 4 and 5	Speed Sensor Errors	
Codes 6 and 7	Slip Control Potentiometer or Circuit Failed	
Code 8	Raise/Work/Lower Switch Failure	
Code 9	Both External Lift/Lower Fender Switches are being Operated Simultaneously	
Codes 10 and 11	Height Limit Control Potentiometer Failed	
Codes 12 and 13	Drop Rate Potentiometer Failed	
Codes 14 and 15	Right Hand Load Sensing Pin or Circuit Failed	
Codes 16 and 17	Left Hand Load Sensing Pin or Circuit Failed	
Code 18	Both Load Sensing Pins Disconnected	
Codes 19 and 20	Incorrect Load Sensing Pin Reference Voltage	
Codes 21 and 22	Position/Draft Sensitivity Control Potentiometer or Circuit Failed	
Code 23	Control Panel Disconnected	
Code 24	Perform Hydraulic Lift calibration	
Code HL	Height Limit Incorrectly Set to Perform Autocalibration	
Codes 25 and 26	Lift Control Lever Potentiometer Disconnected or Circuit Failed	
Codes 27 and 28	Lift Arm Position Sensing Potentiometer Disconnected or Circuit Failed	
Code 29	Hydraulic Control Valve Disconnected	
Code 30	Ground Signal to Microprocessor Open Circuit	
Code 31	Chassis Harness Disconnected	
Code 49	Wheel Speed Sensor Open/Short Circuit	
Code 53	Microprocessor 5 volt Reference Shorted to 12 volts	
Code 54	Microprocessor 5 volt Reference Shorted to Ground	
Code 57	EDC Microprocessor Failure	
Code 59	Microprocessor 5 volt Reference Voltage Open Circuit	
Code 63 and 65	EDC Hydraulic Valve Lower Solenoid Open/Short Circuit	
Code 64 and 66	EDC Hydraulic Valve Raise Solenoid Open/Short Circuit	
Code 67	EDC Hydraulic Valve Supply Voltage to Low	
No Error Code	Miscellaneous Hydraulic Lift Concerns	

ERROR CODES 2

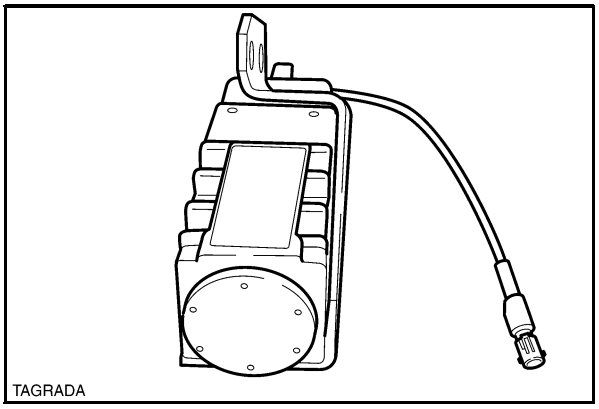
TAGRADA

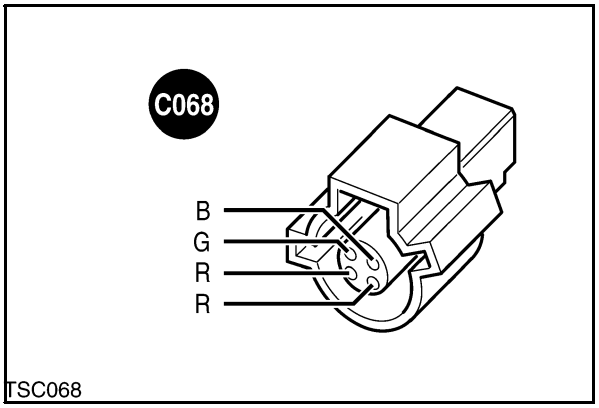

TSC068

ERROR CODE 2 - Poor or no signal from tractor performance monitor radar

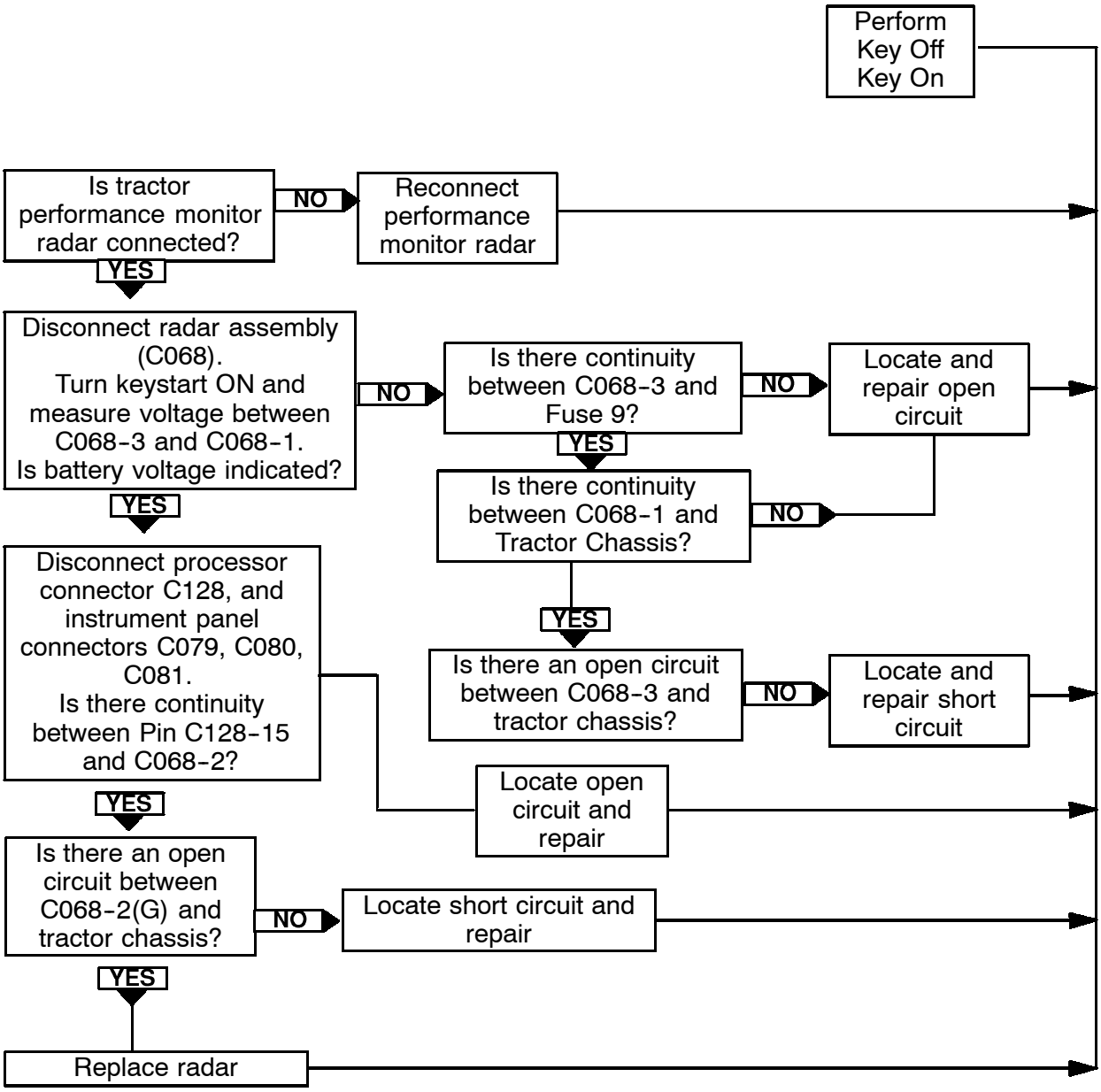

ERROR CODES 3, 4 & 5 – Speed sensor errors

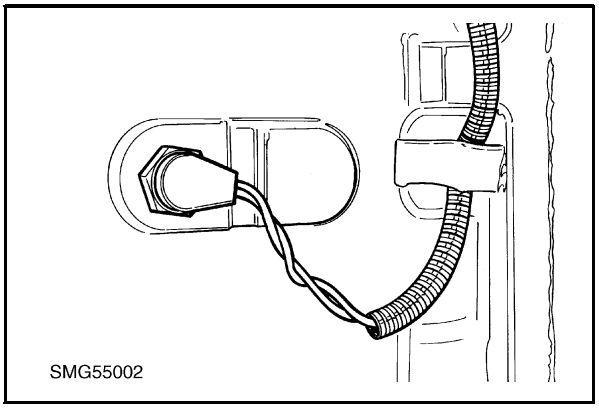

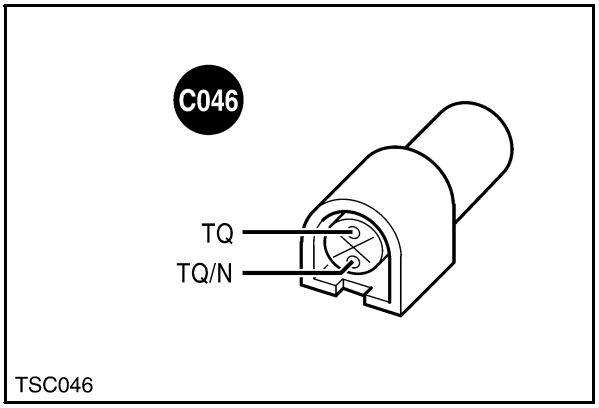

ERROR CODES 3, 4 & 5 – Speed sensor errors

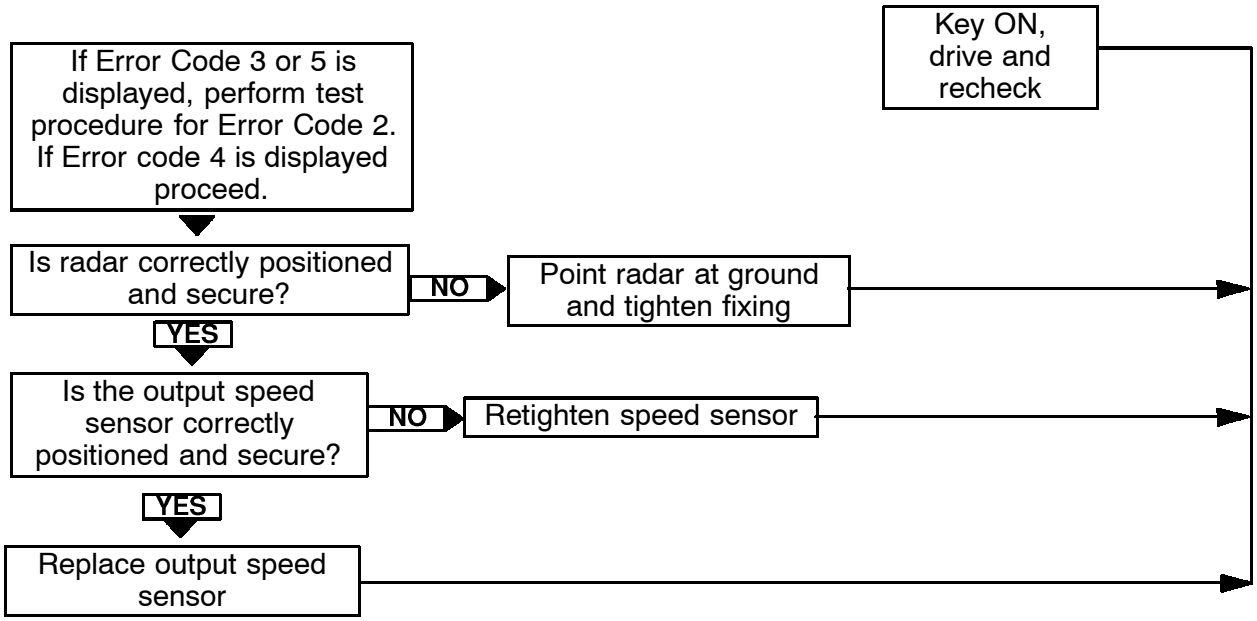

ERROR CODES 6 & 7

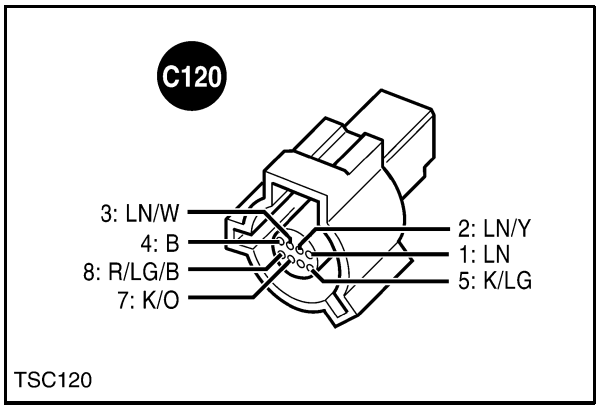

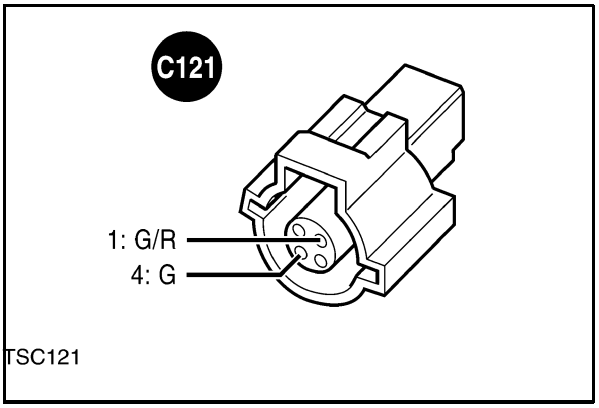

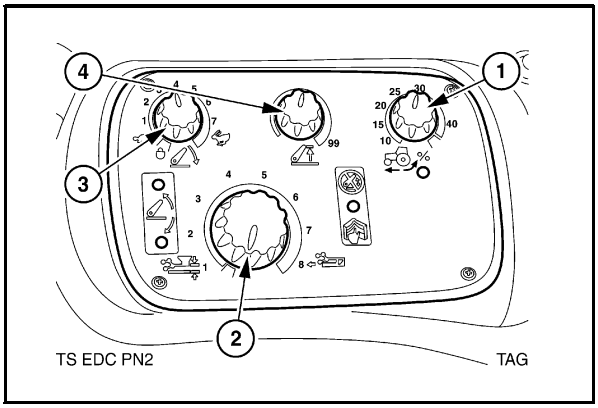

ERROR CODES 6 & 7 - Slip control potentiometer or circuit failed

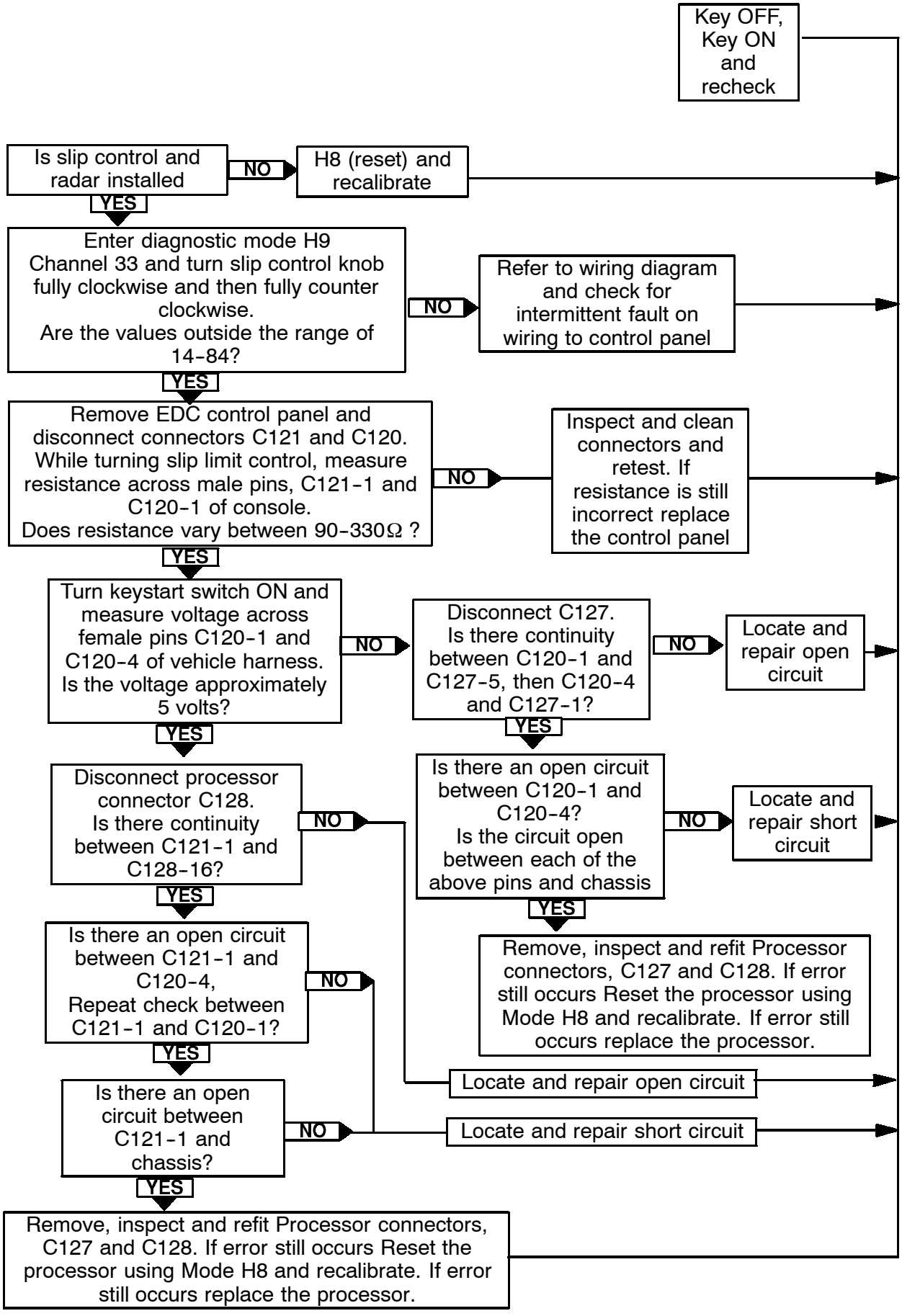

ERROR CODE 8 – In cab Raise/Work/Lower switch failure

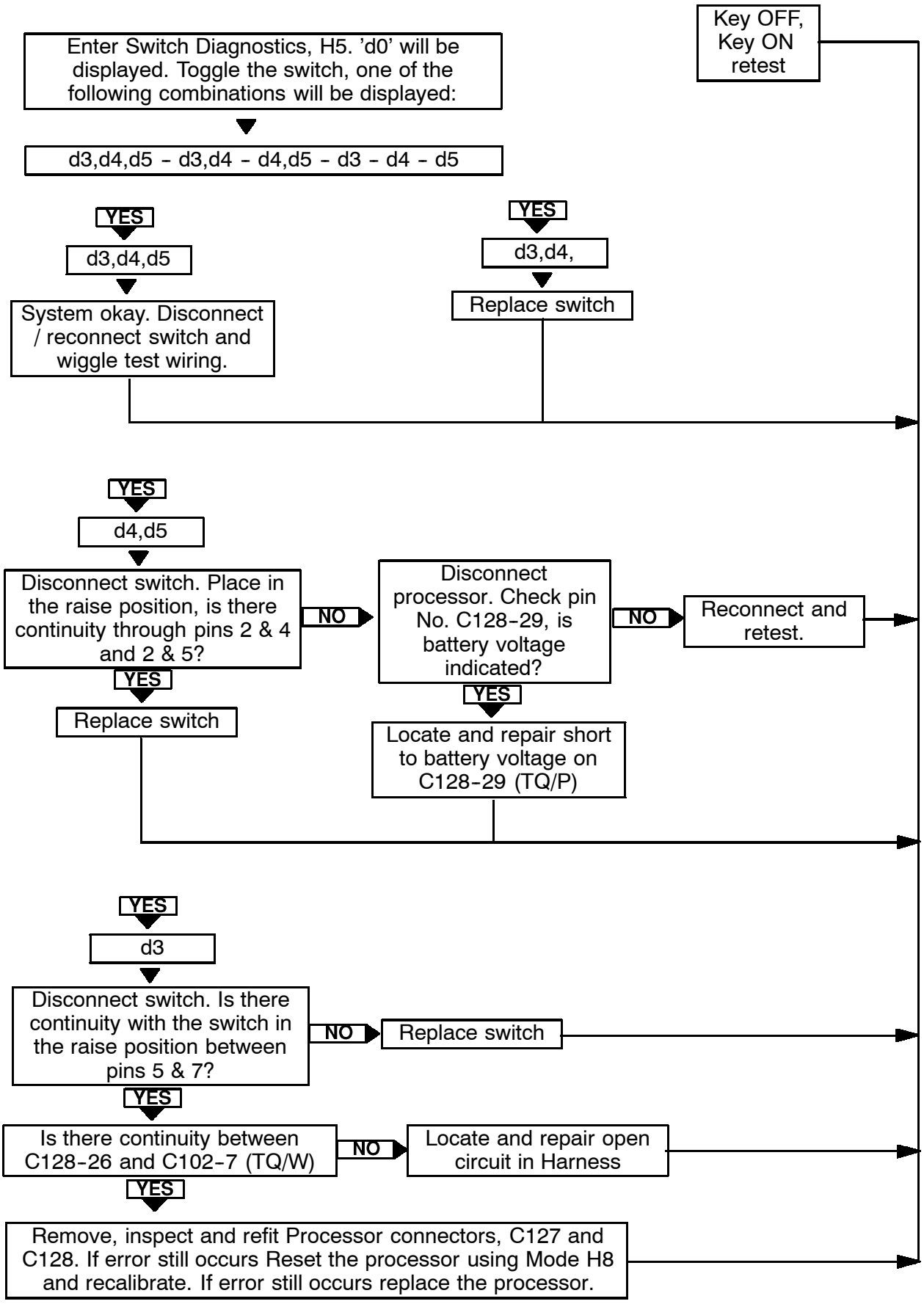

ERROR CODE 8 - In cab Raise/Work/Lower switch failure

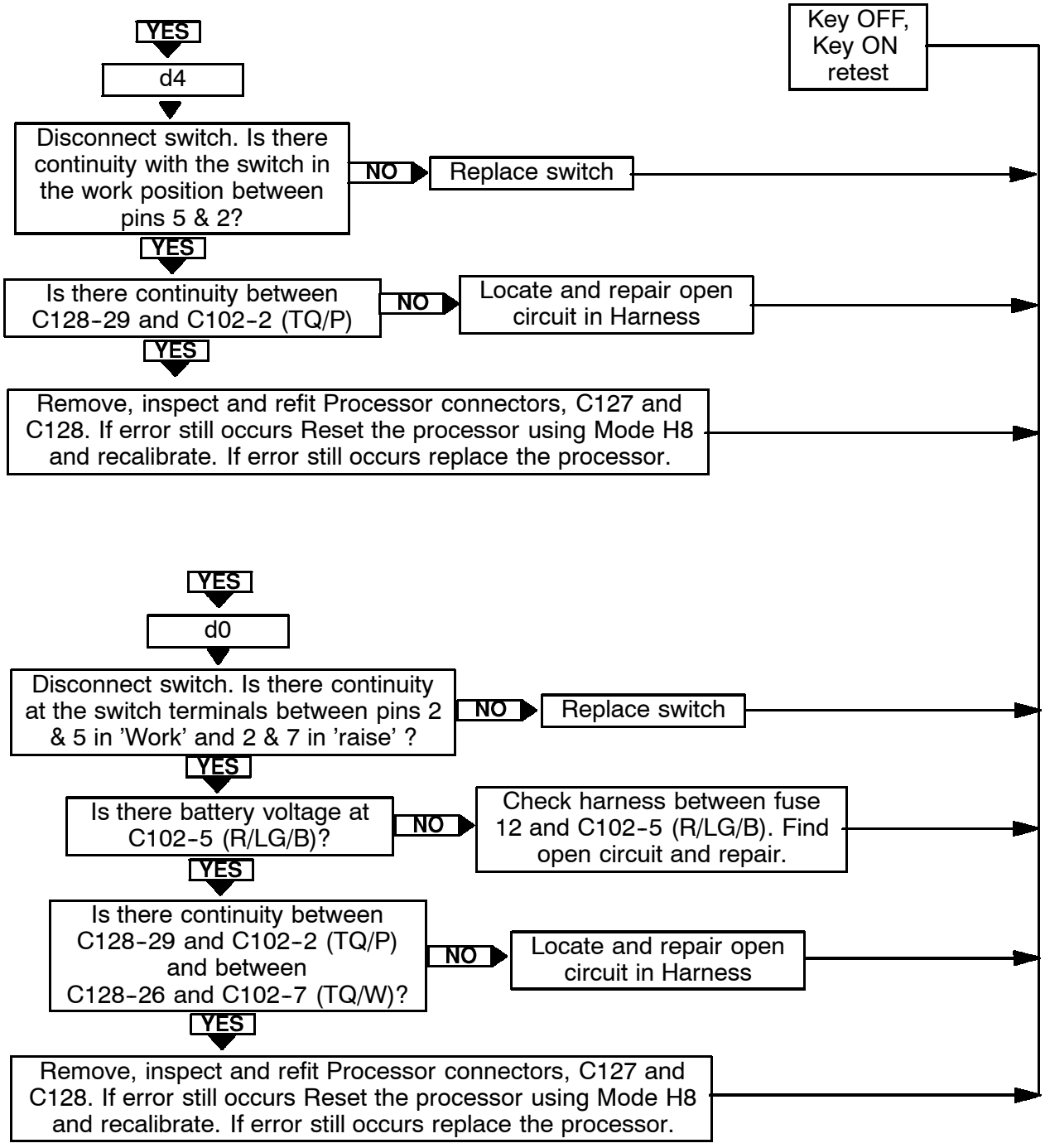

ERROR CODES 9 – Both external switches operated together

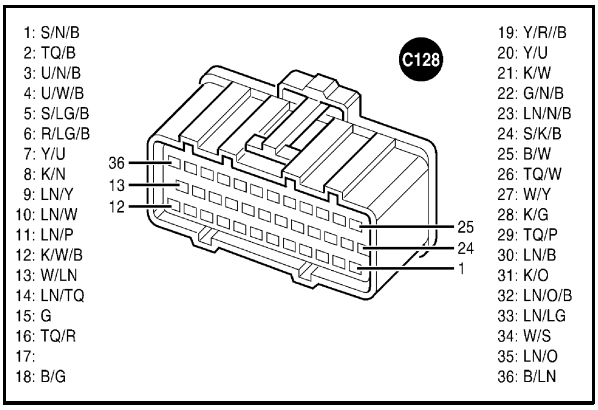

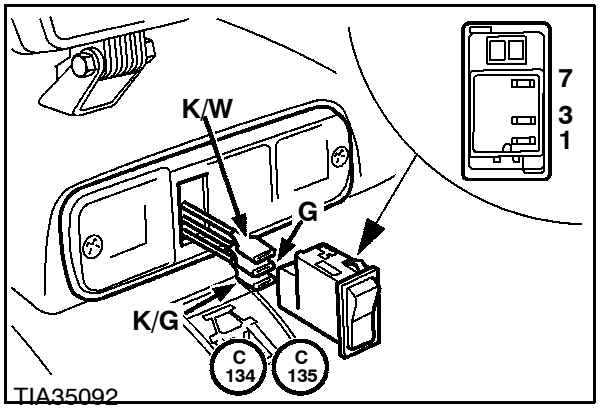

ERROR CODES 9 – Both external switches operated together

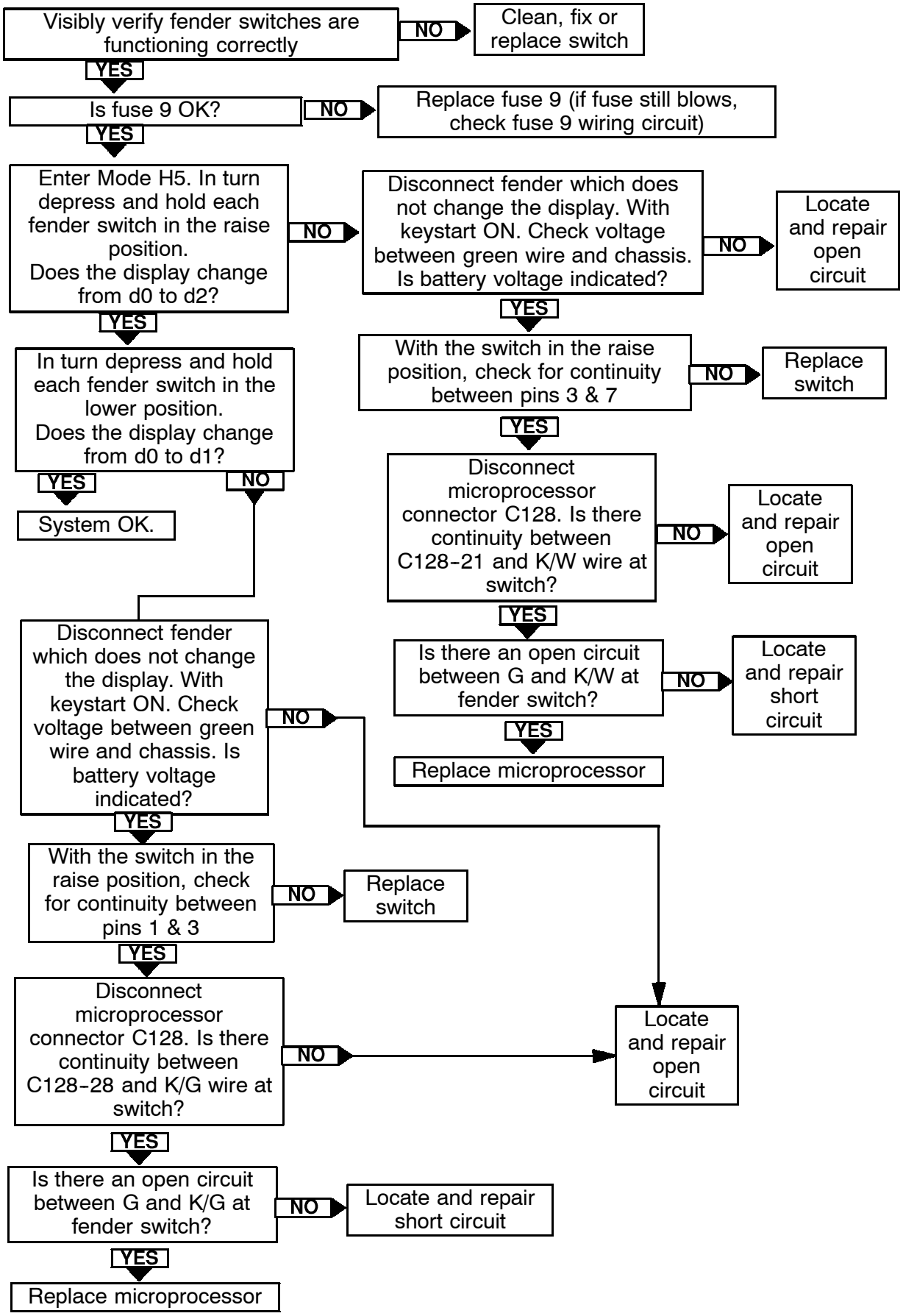

ERROR CODES 10 & 11

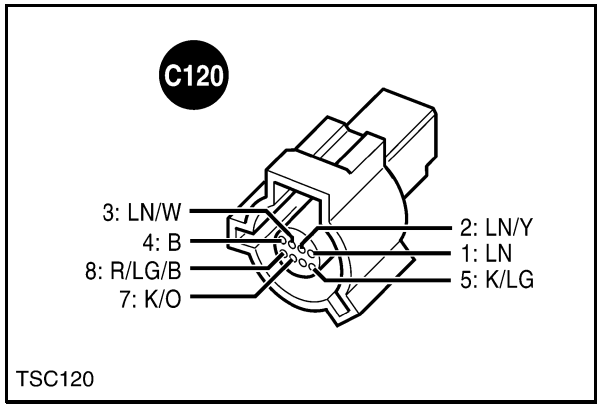

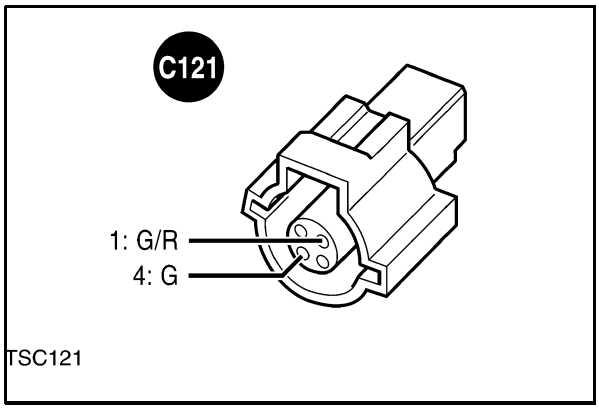

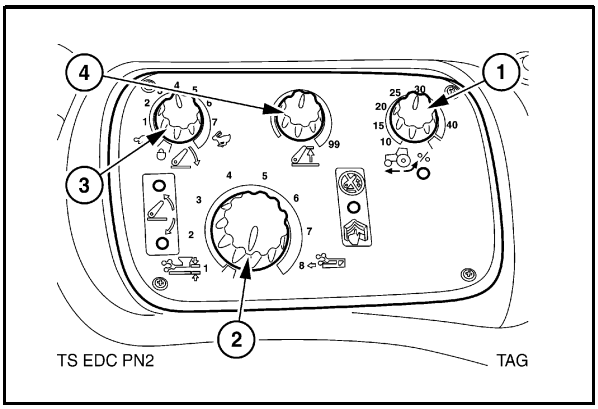

ERROR CODES 10 & 11 - Height limit control potentiometer failed

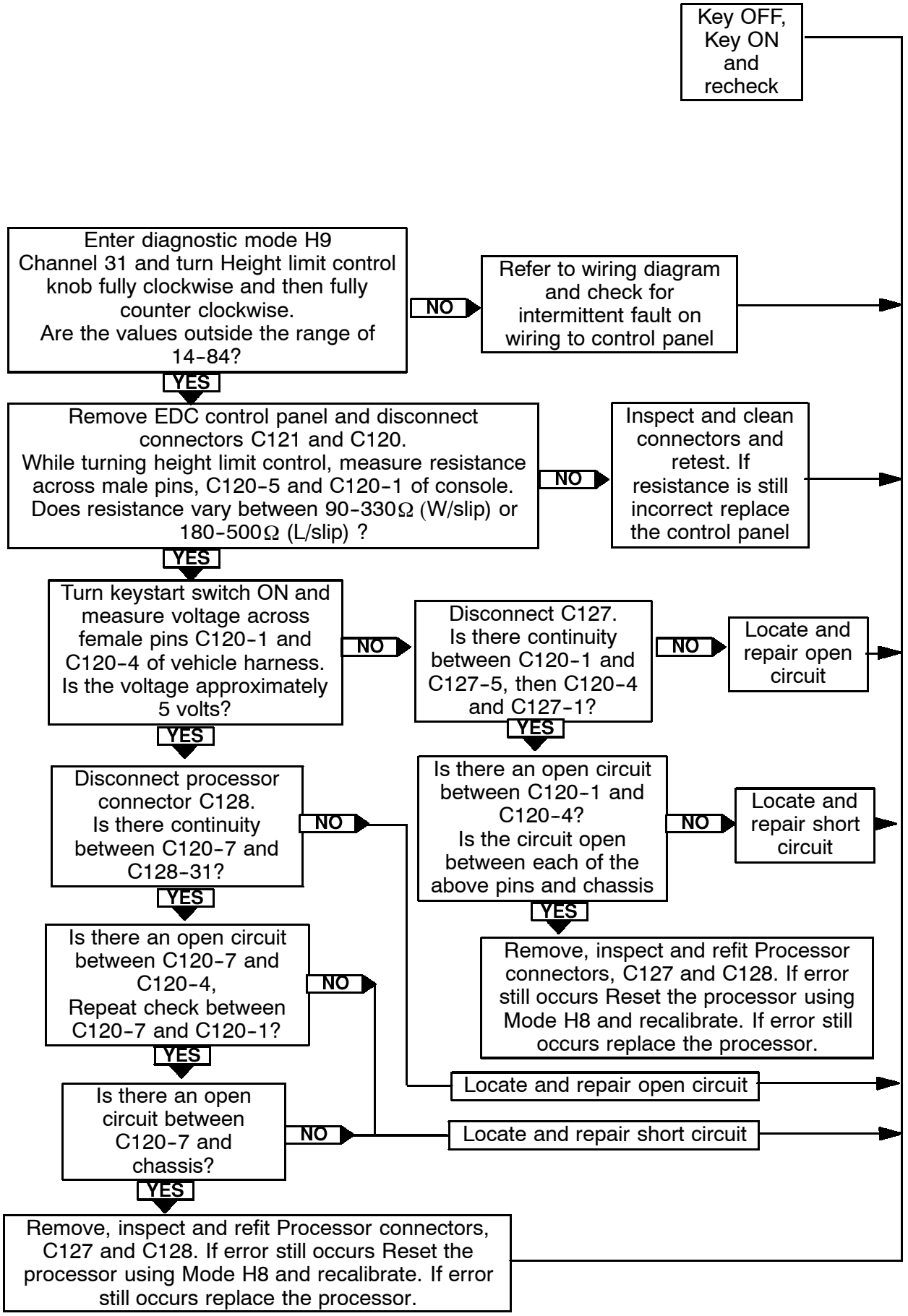

ERROR CODES 12 & 13

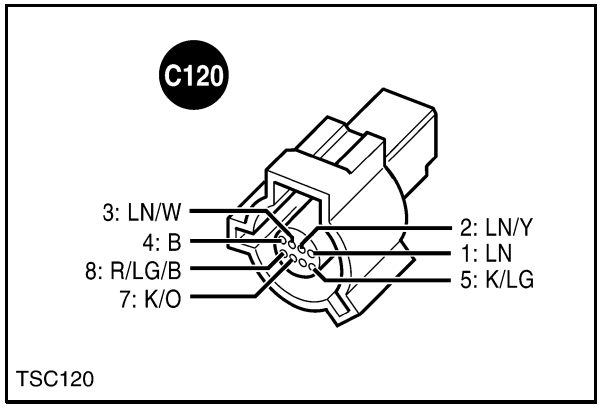

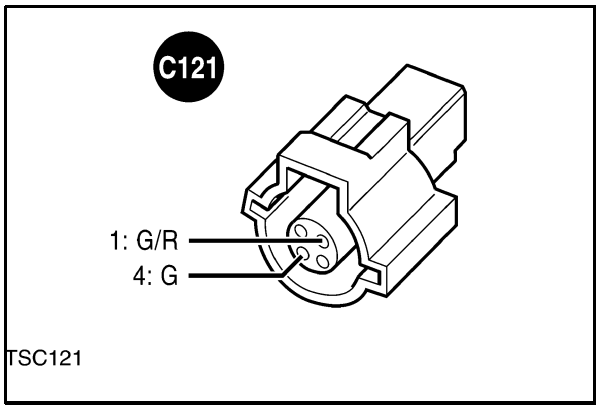

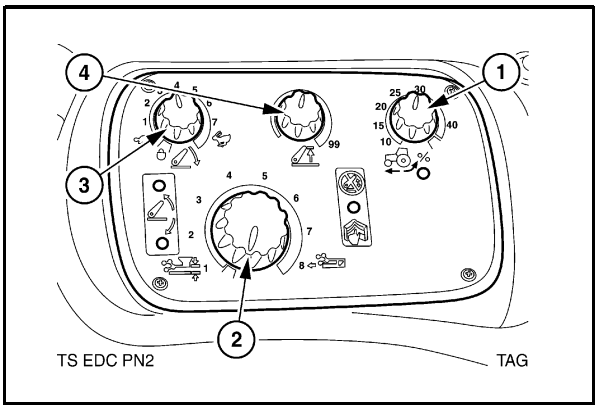

ERROR CODES 12 & 13 – Drop Rate control potentiometer failed

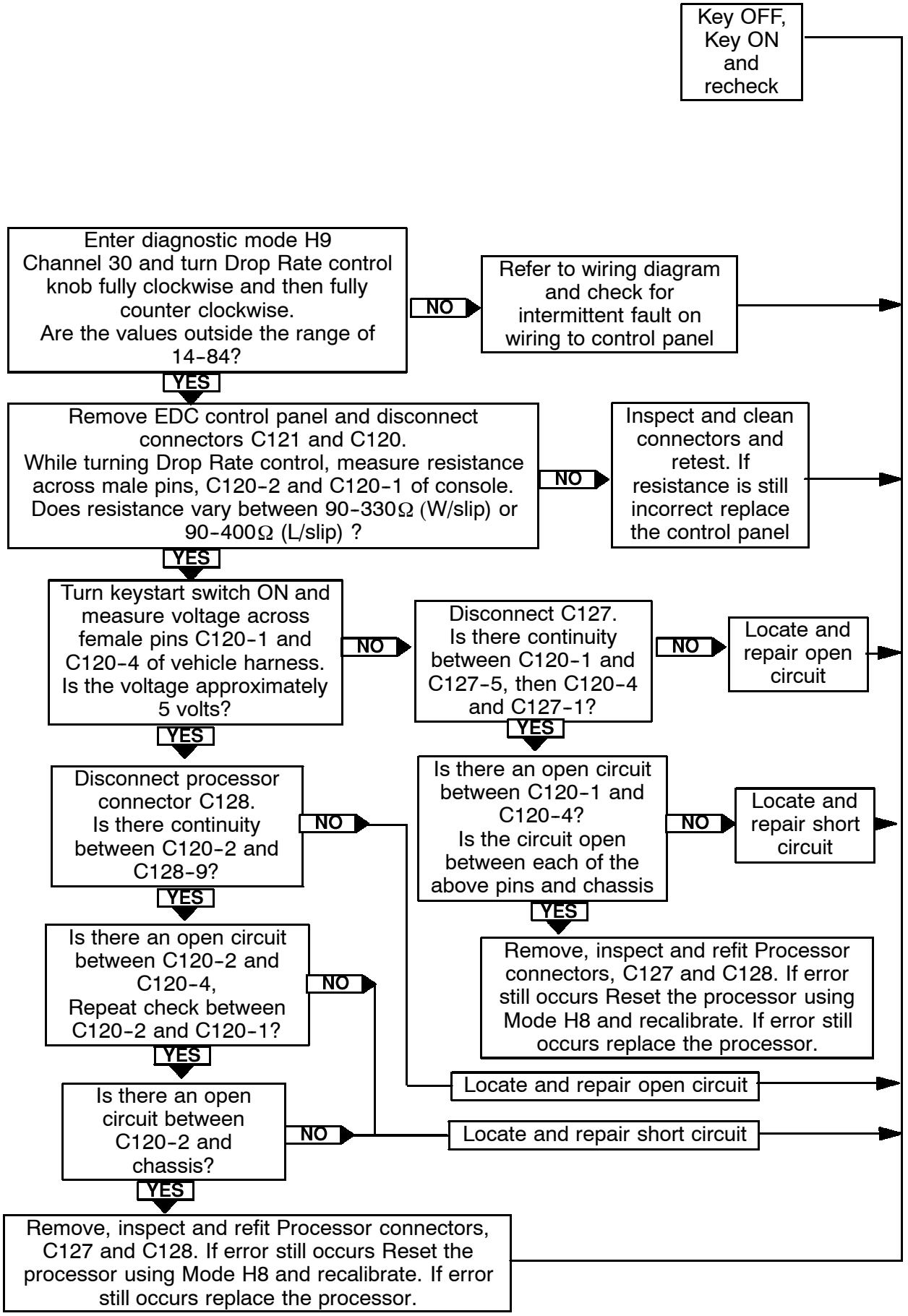

ERROR CODES 14 & 15 – R.H. Load Sensing Pin or Circuit Failed

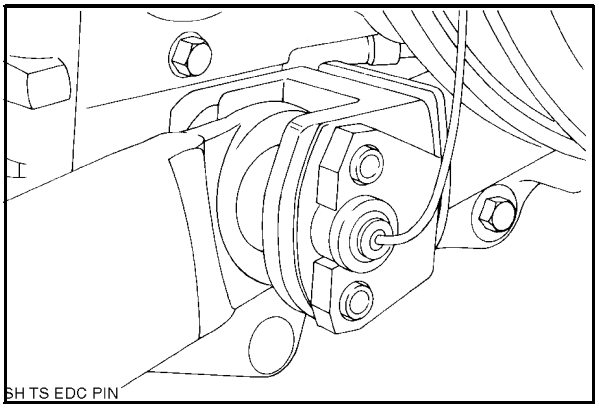

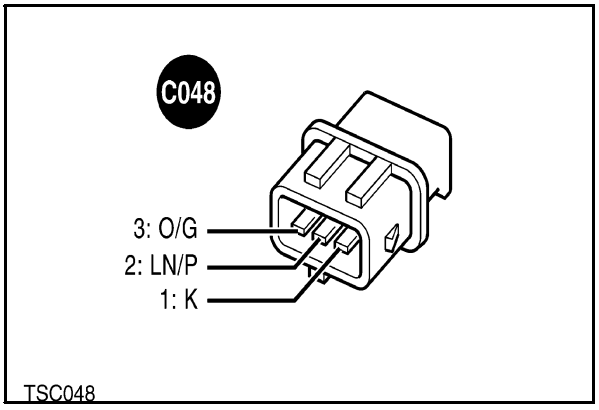

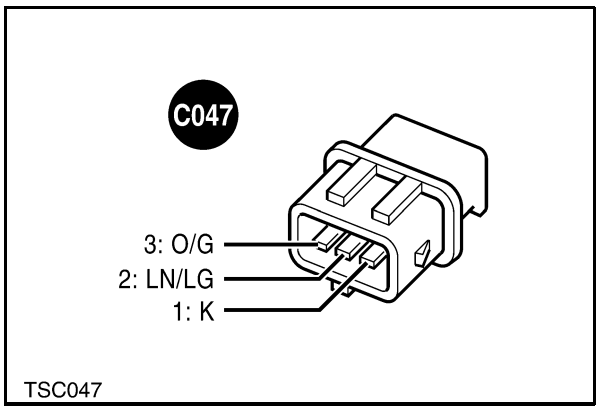

ERROR CODES 14 & 15 - R.H. Load Sensing Pin or Circuit Failed

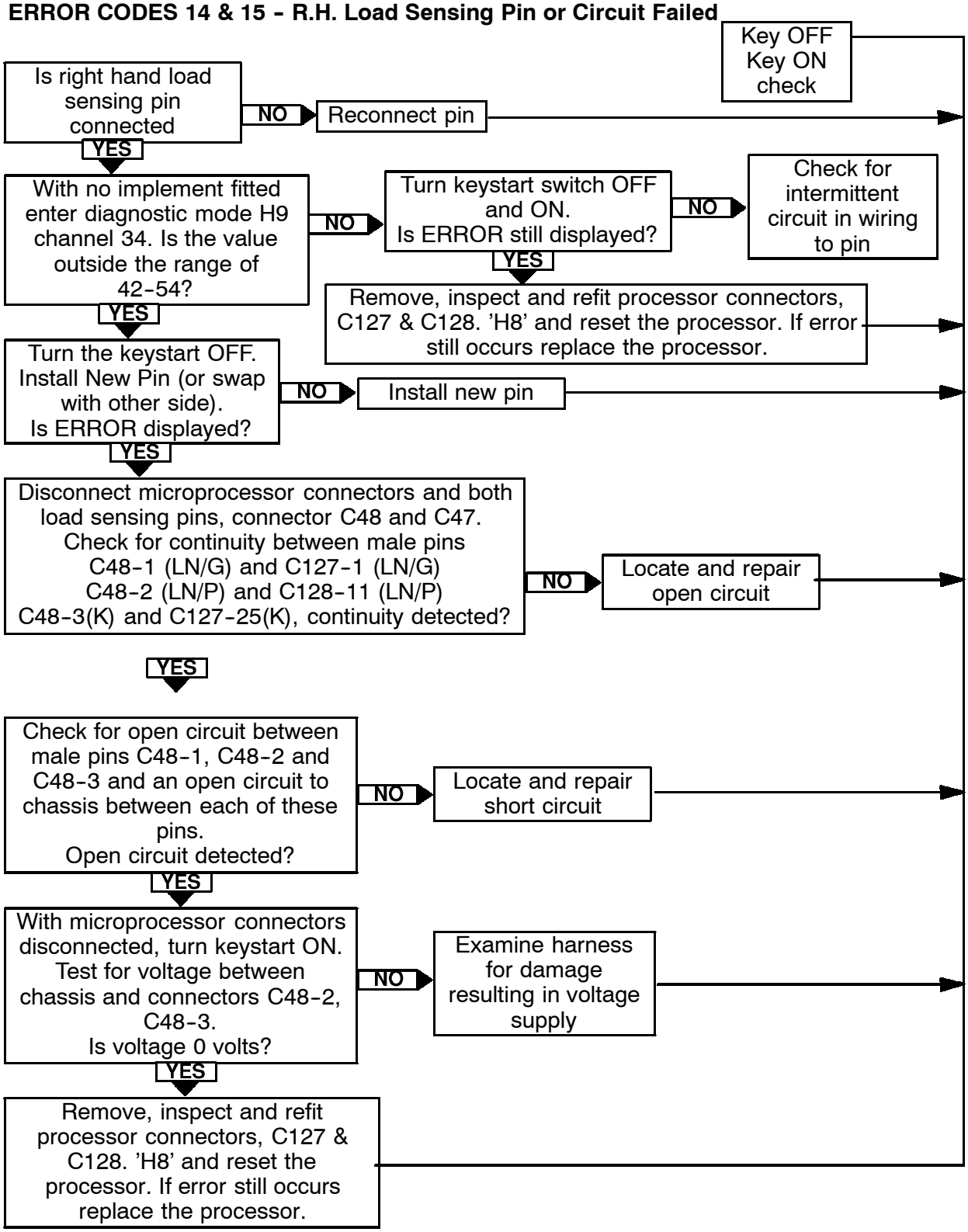

ERROR CODES 16 & 17 – L.H. Load Sensing Pin or Circuit Failed

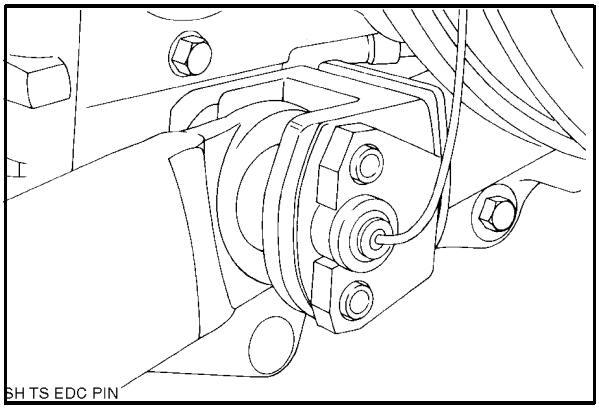

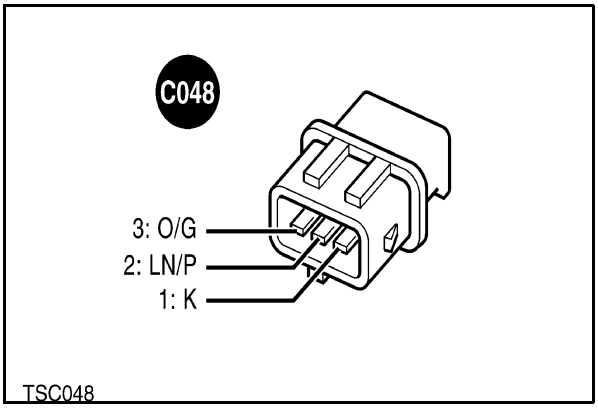

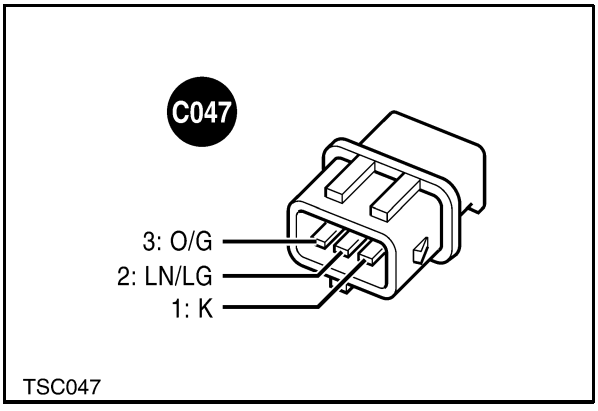

ERROR CODES 16 & 17 - L.H. Load Sensing Pin or Circuit Failed

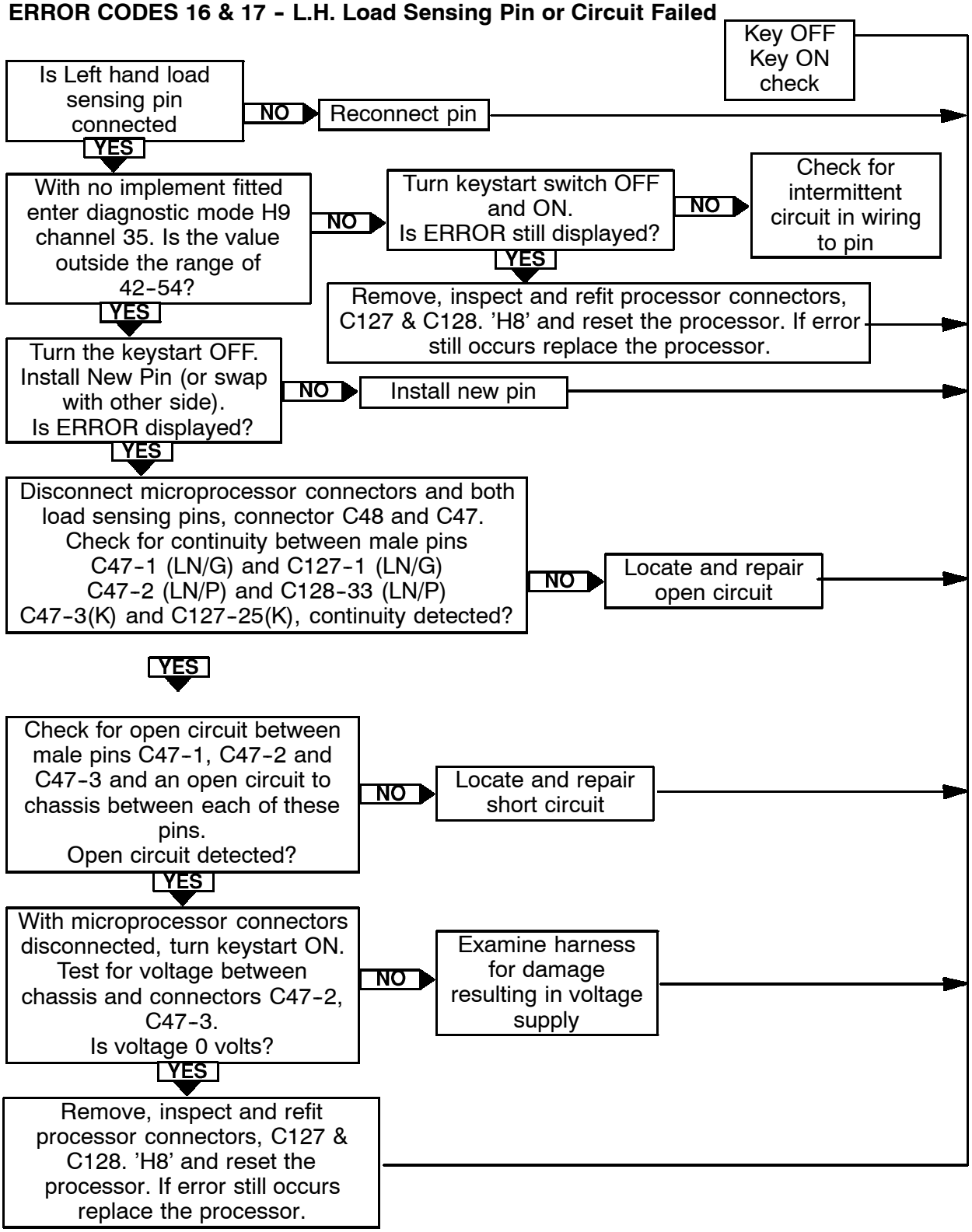

ERROR CODES 18 – Both load sensing pins disconnected

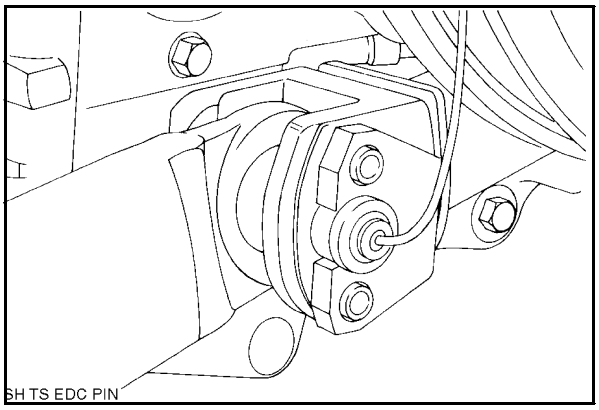

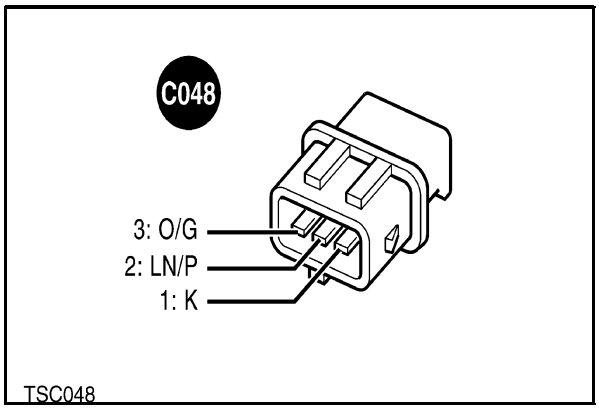

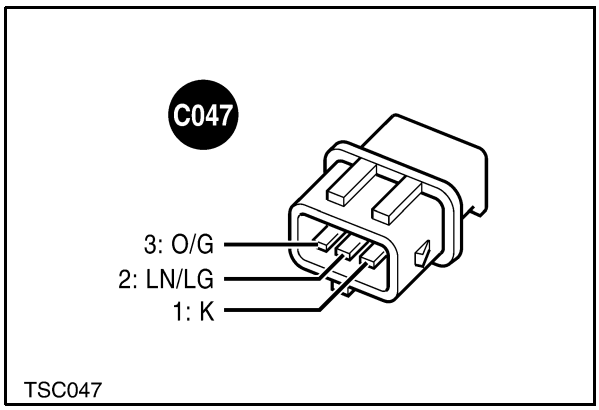

ERROR CODES 18 - Both load sensing pins disconnected

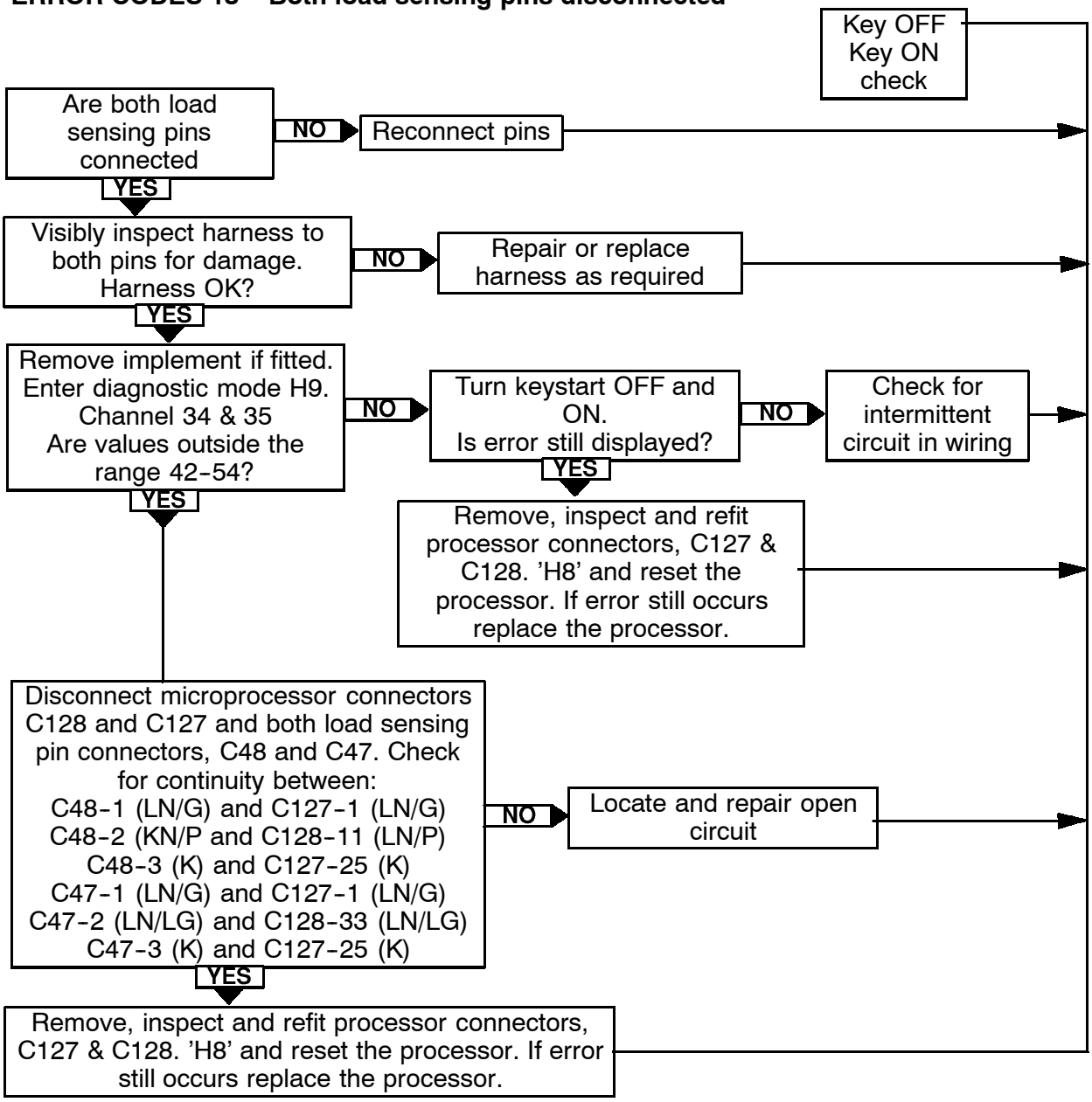

ERROR CODES 19 & 20 – Incorrect load sensing pin reference voltage

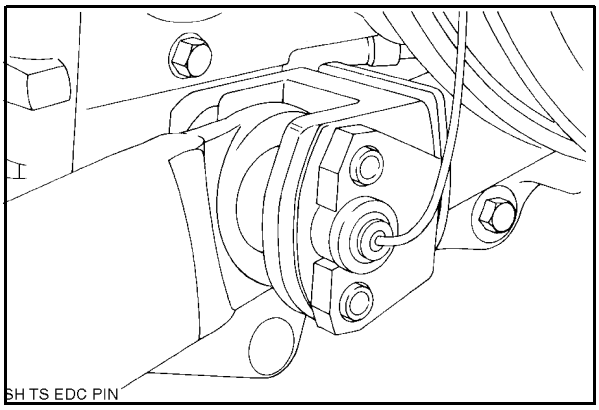

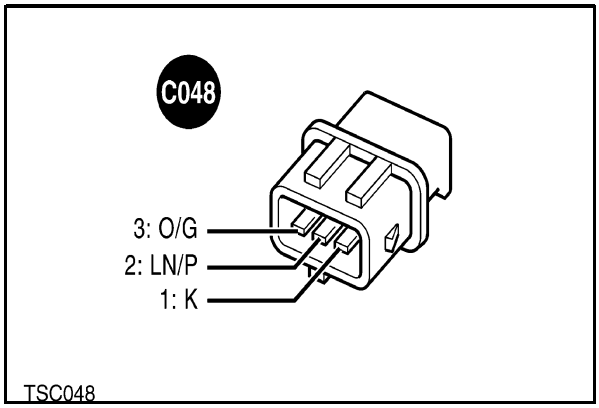

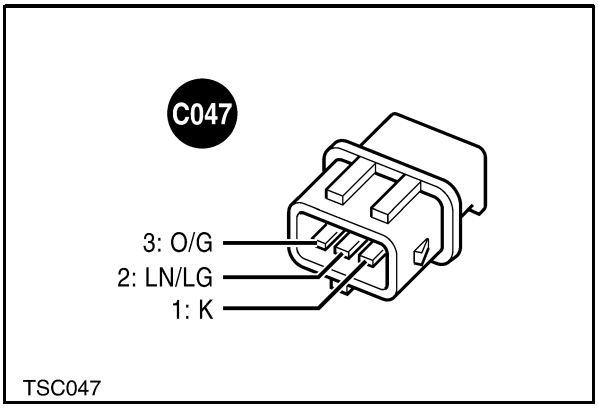

ERROR CODES 19 & 20 - Incorrect load sensing pin reference voltage

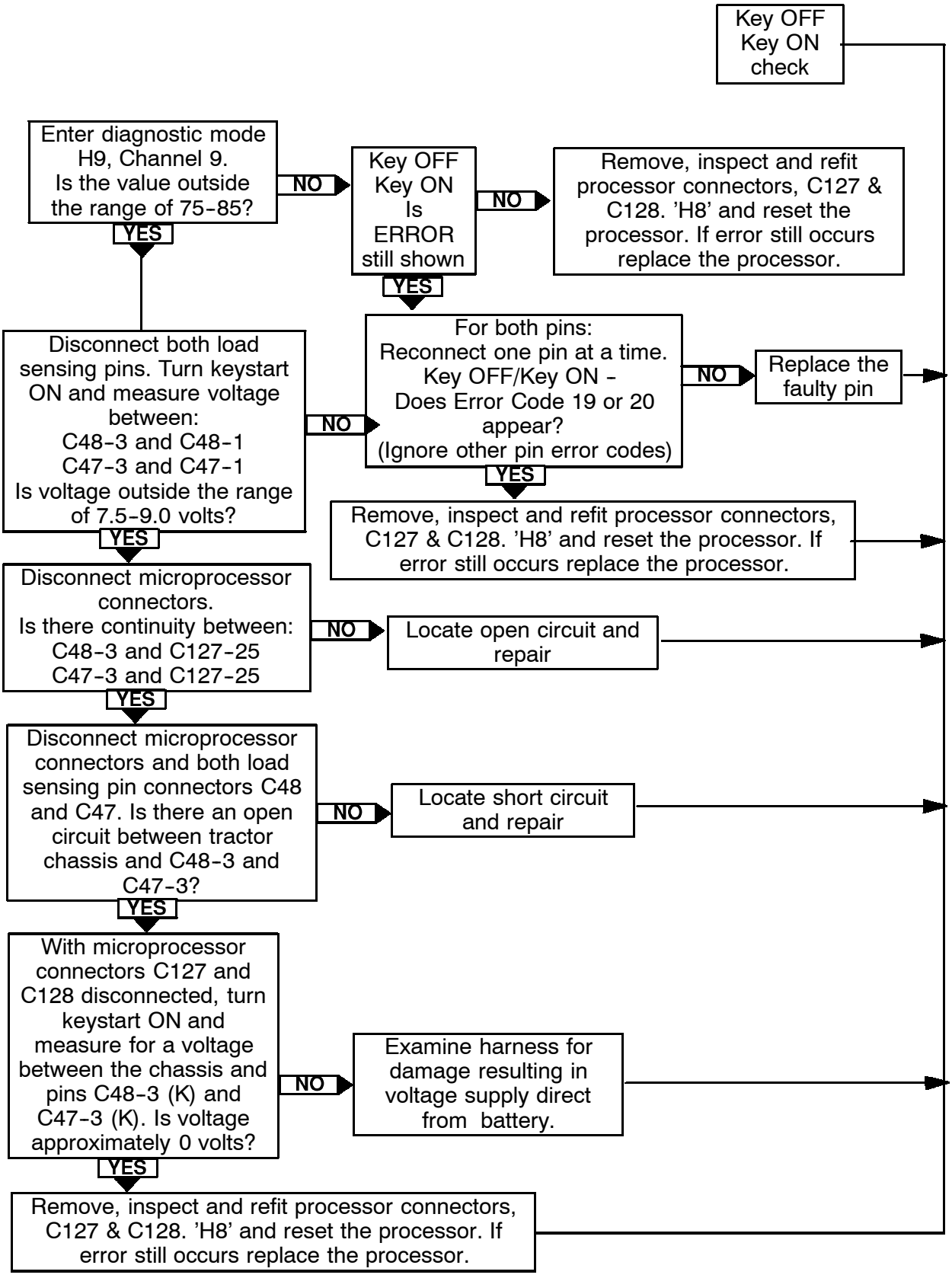

ERROR CODES 21 & 22

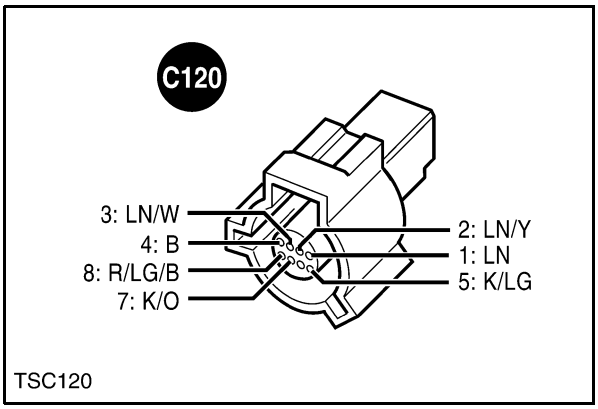

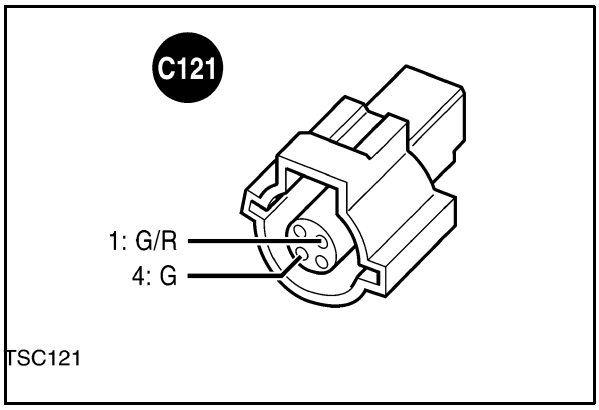

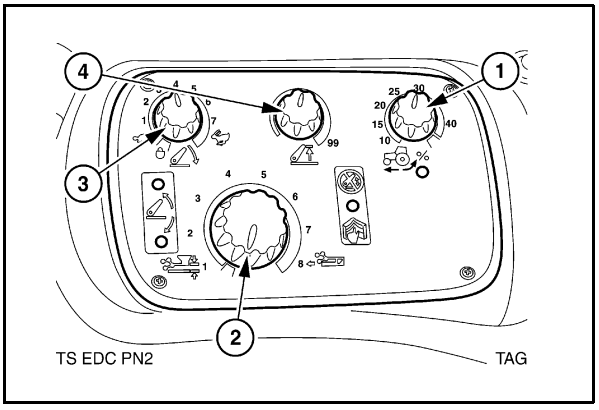

ERROR CODES 21 & 22 – Position/draft sensitivity control potentiometer or circuit failed

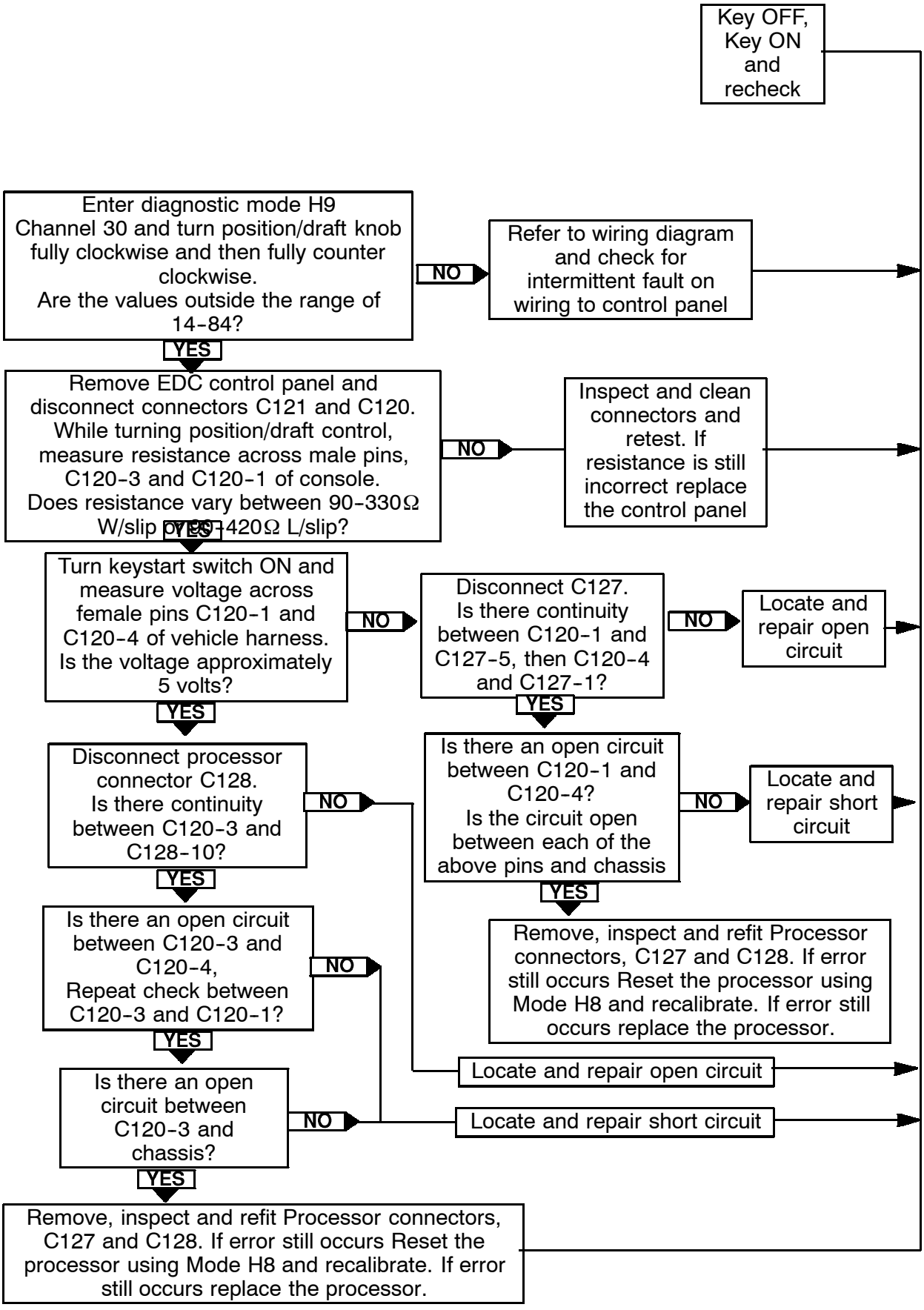

ERROR CODES 23 – Control panel disconnected

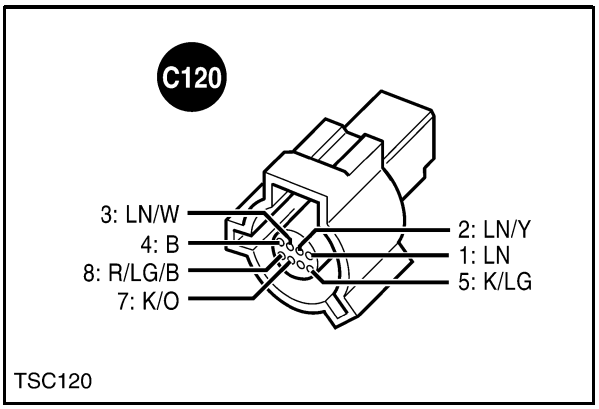

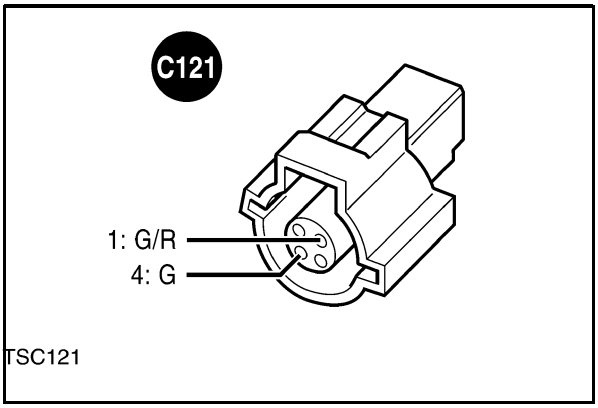

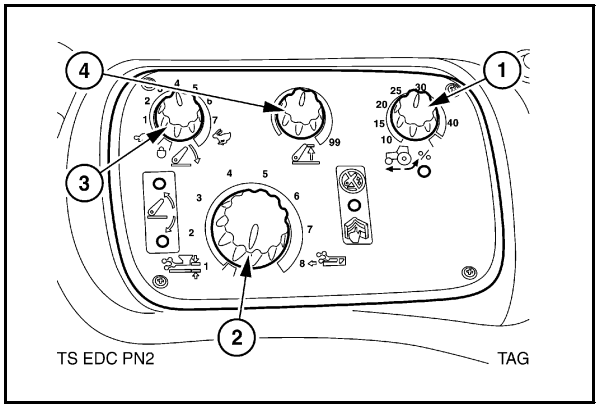

ERROR CODES 23 – Control panel disconnected

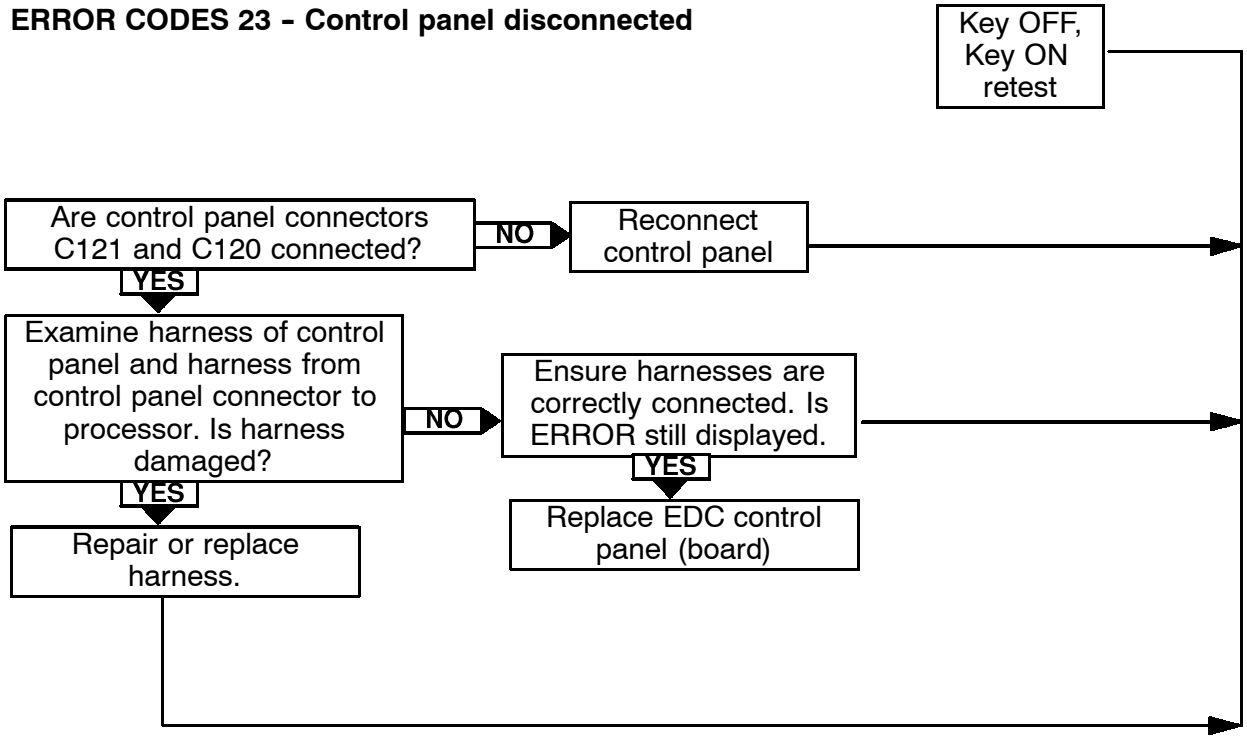

ERROR CODE 24 -

Perform hydraulic lift calibration after replacement of lift arm potentiometer, microprocessor, lift lever potentiometer.

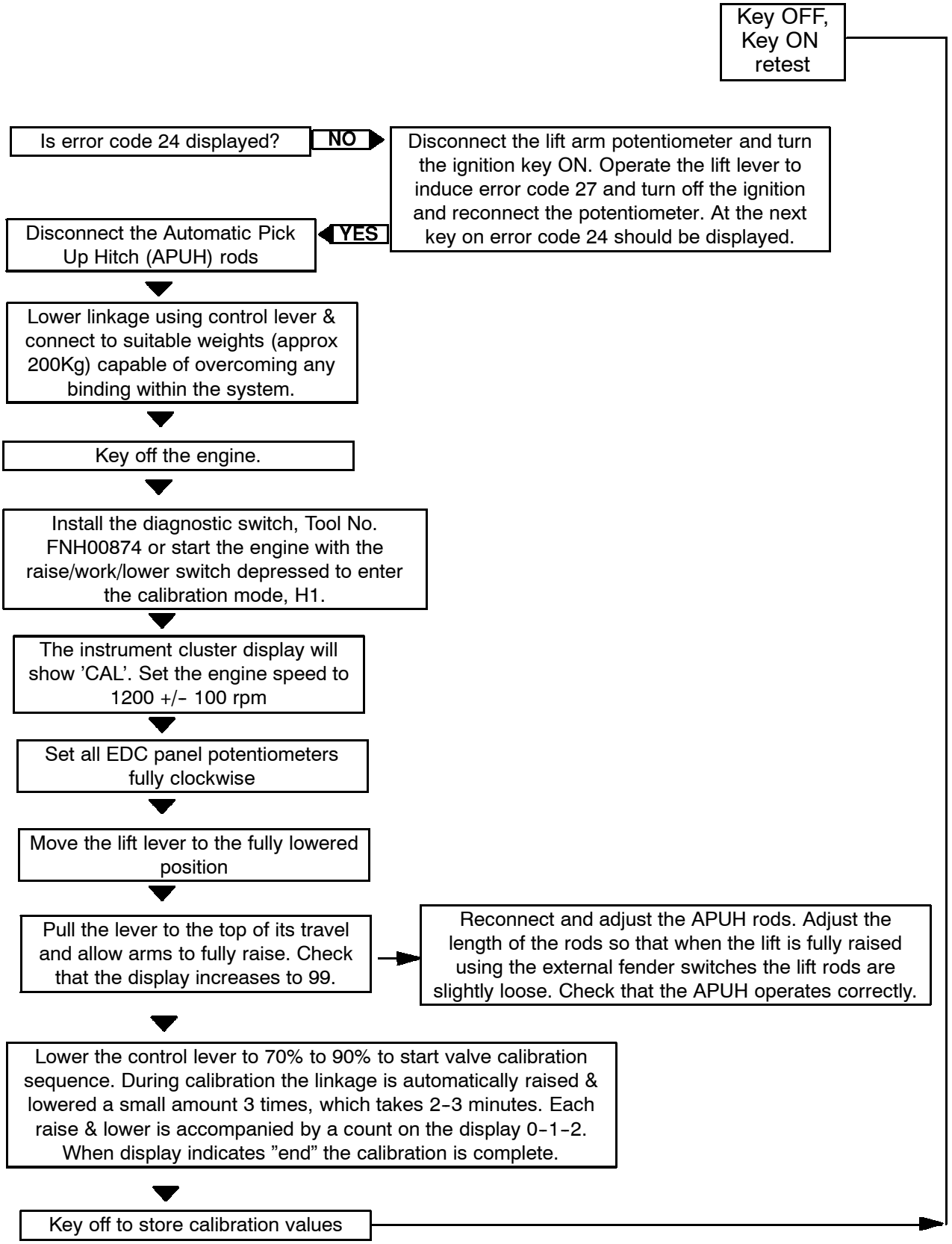

ERROR CODES 25 & 26 – Lift control lever potentiometer disconnected or circuit failed

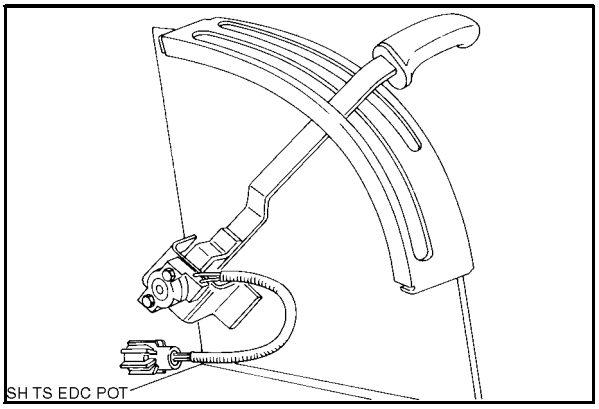

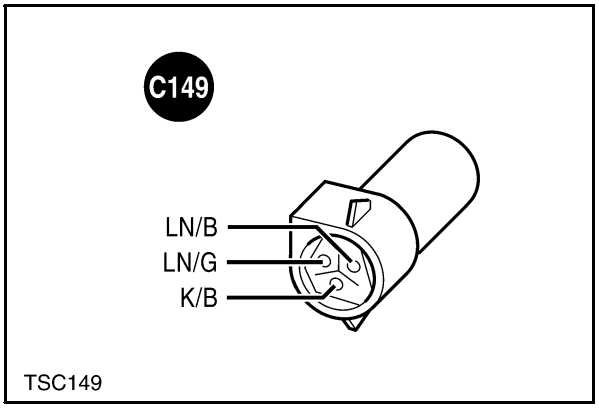

ERROR CODES 25 & 26 – Lift control lever potentiometer disconnected or circuit failed

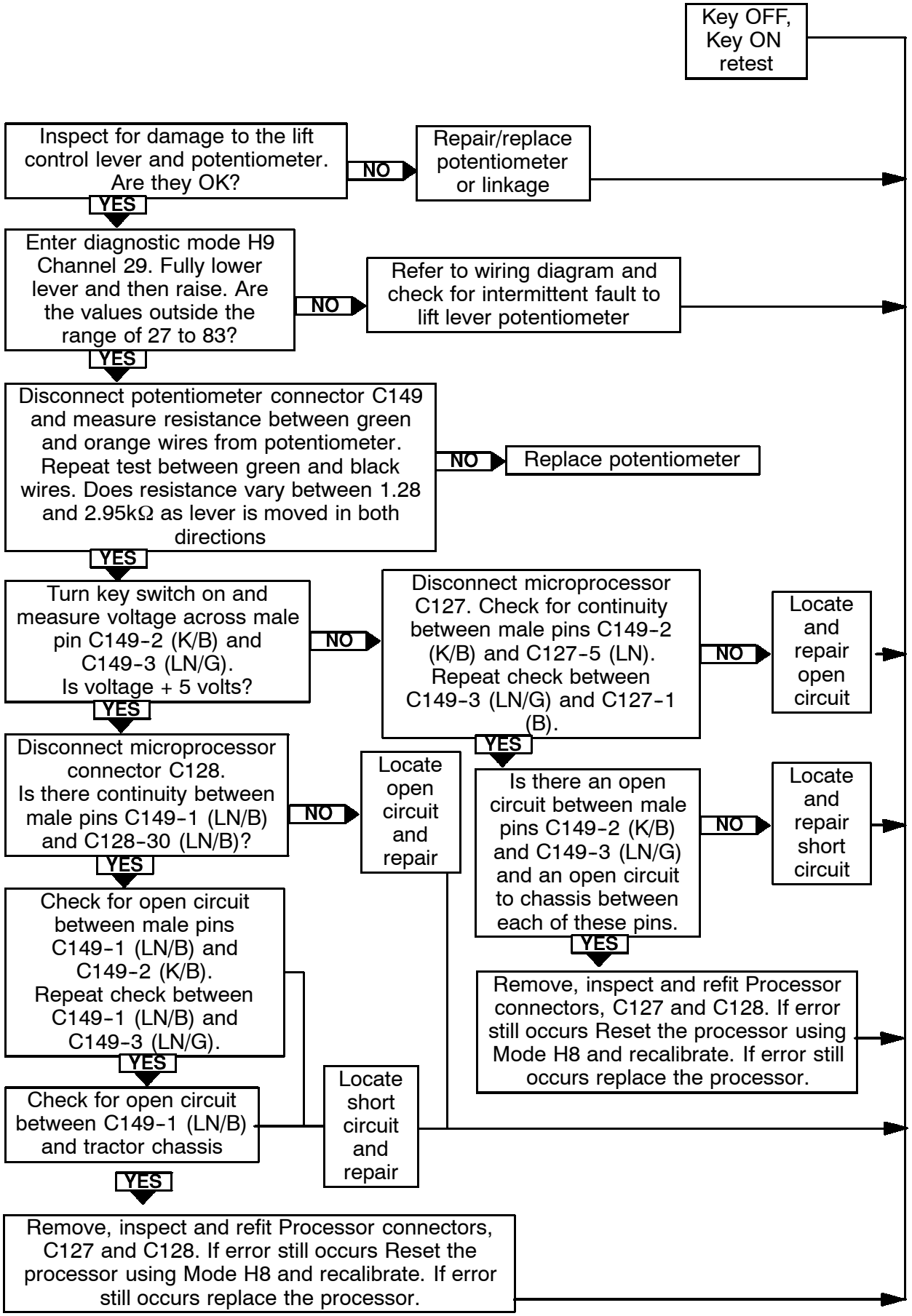

ERROR CODES 27 & 28 – Lift arm potentiometer sensing potentiometer disconnected or circuit failed

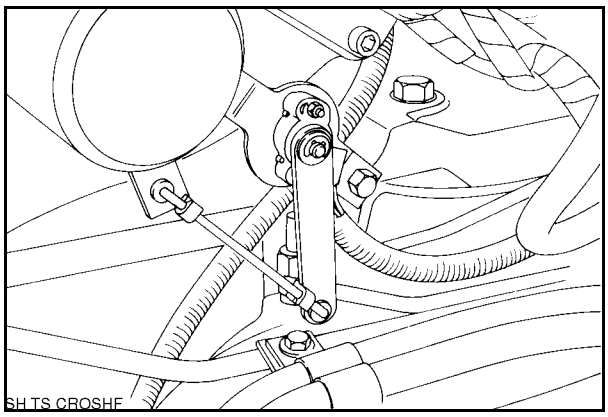

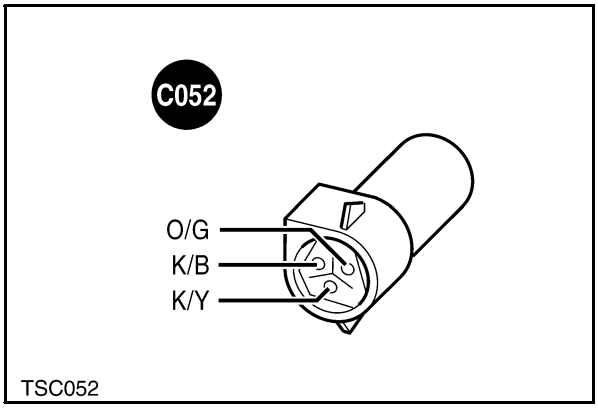

ERROR CODES 27 & 28 – Lift arm potentiometer sensing potentiometer disconnected or circuit failed

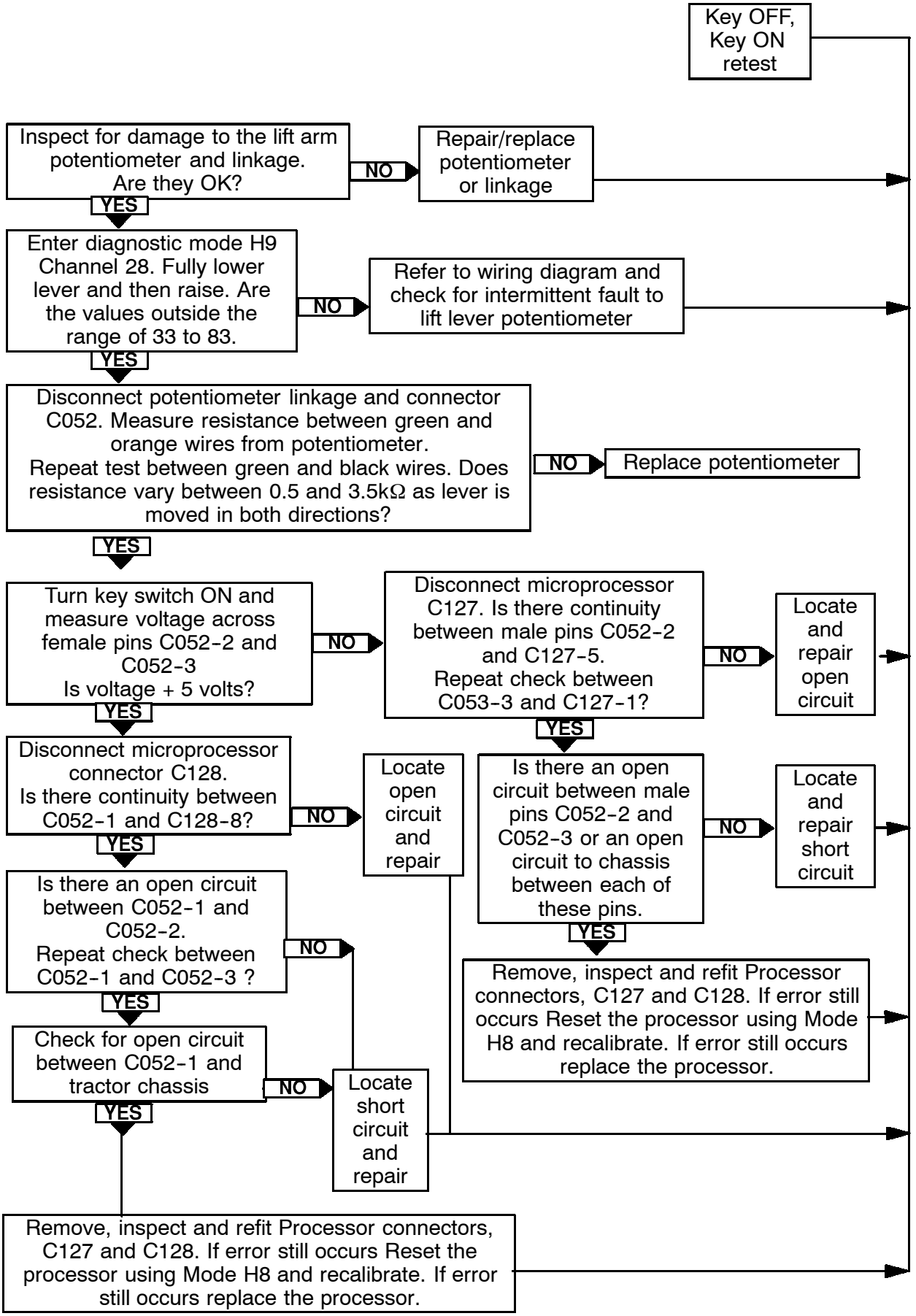

ERROR CODE 29 – Hydraulic control valve disconnected

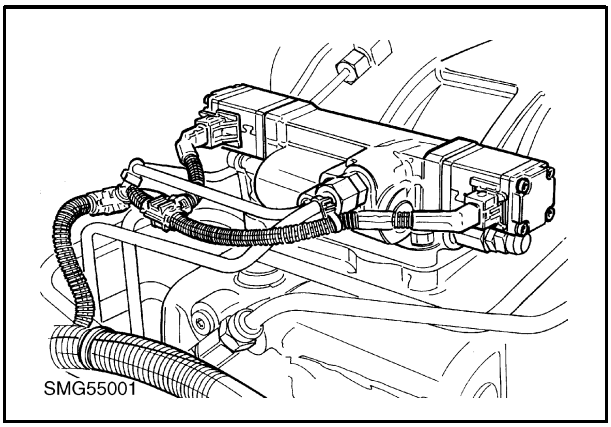

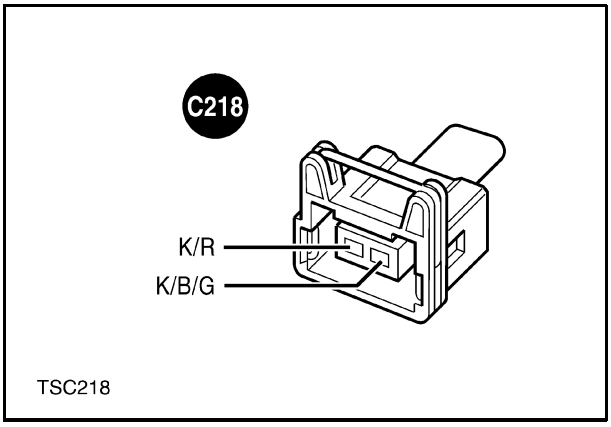

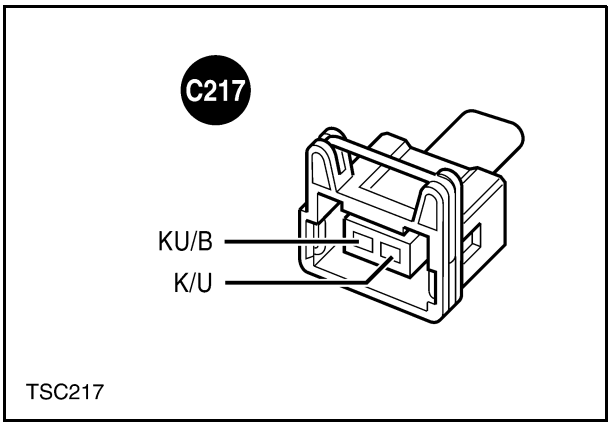

ERROR CODE 29 – Hydraulic control valve disconnected

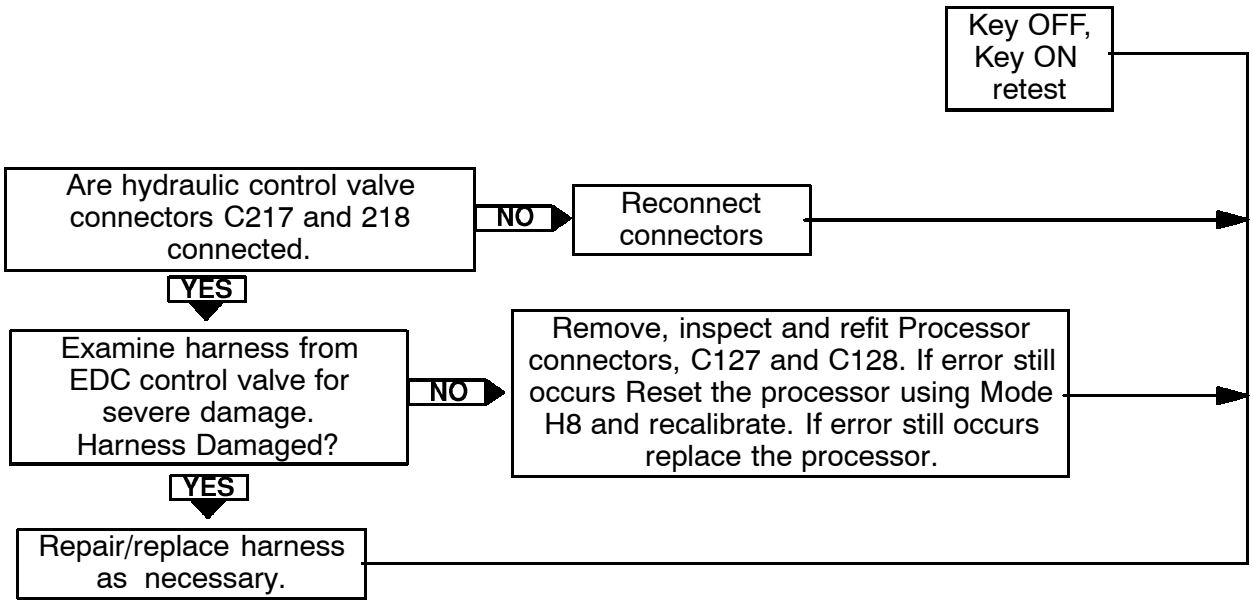

ERROR CODE 30 – Signal ground open circuit

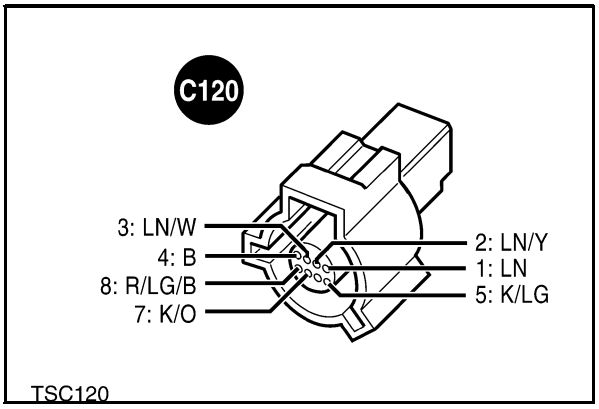

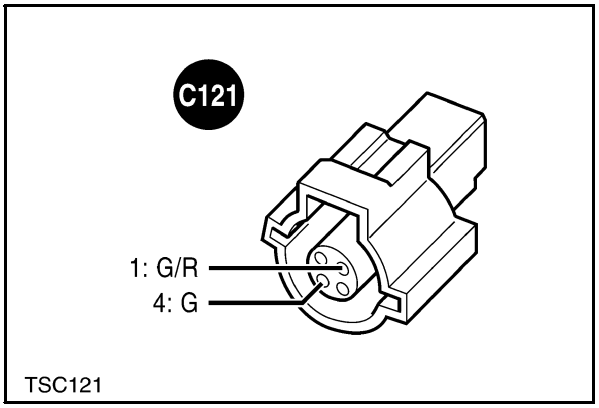

ERROR CODE 30 – Signal ground open circuit

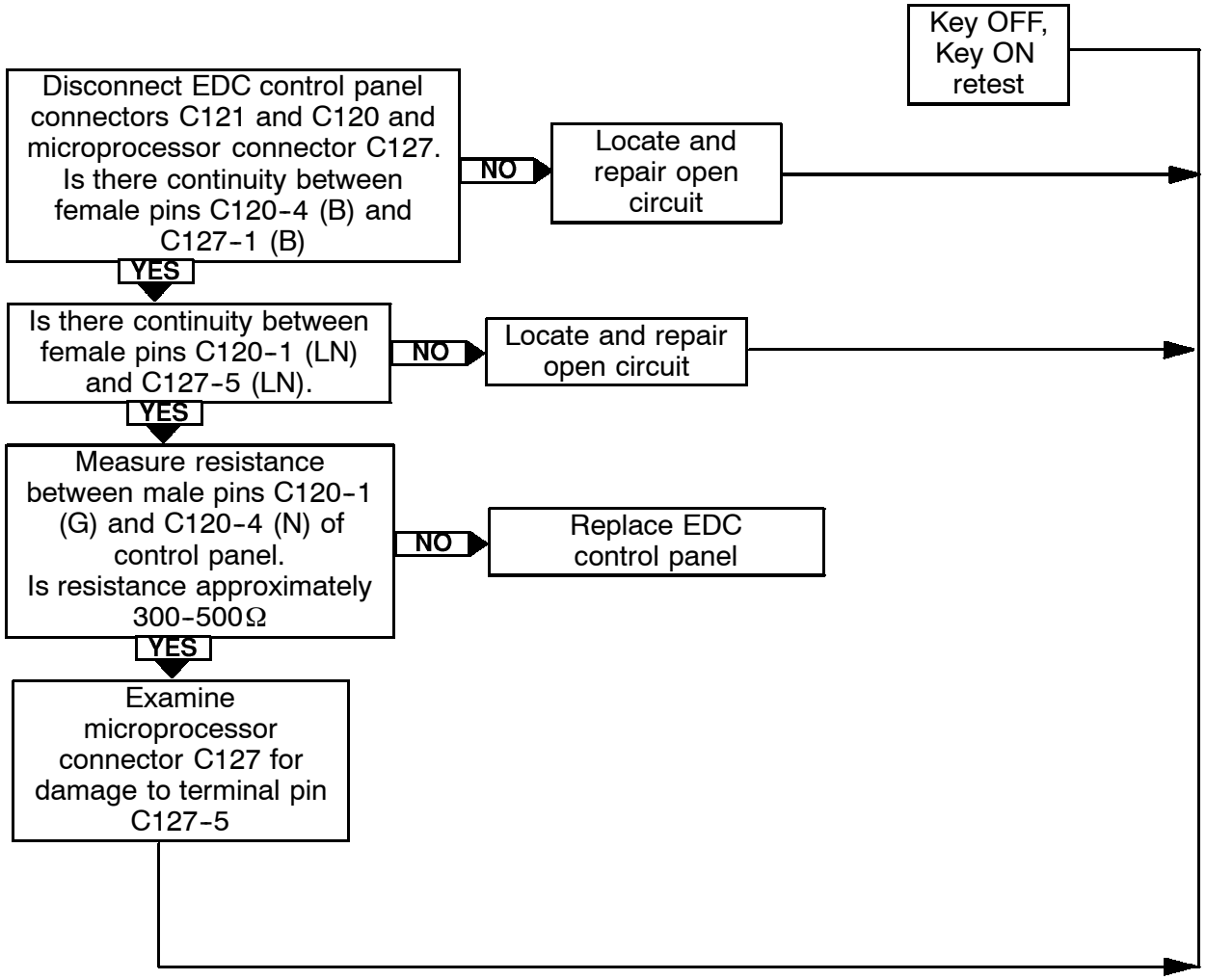

ERROR CODES 31 – Drive line / EDC harness disconnected

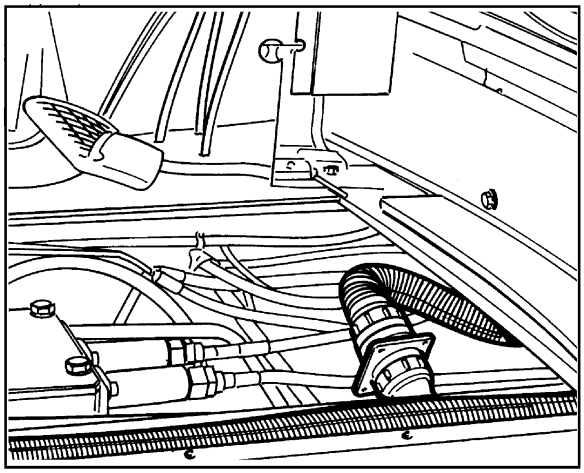

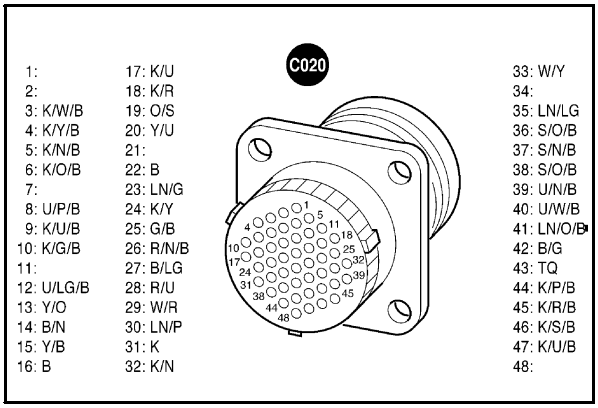

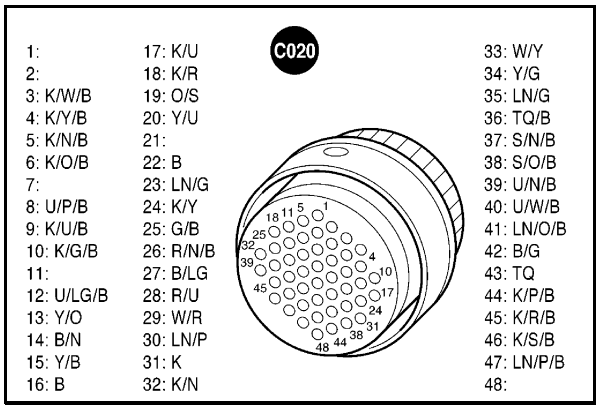

ERROR CODES 31 – Drive line / EDC harness disconnected

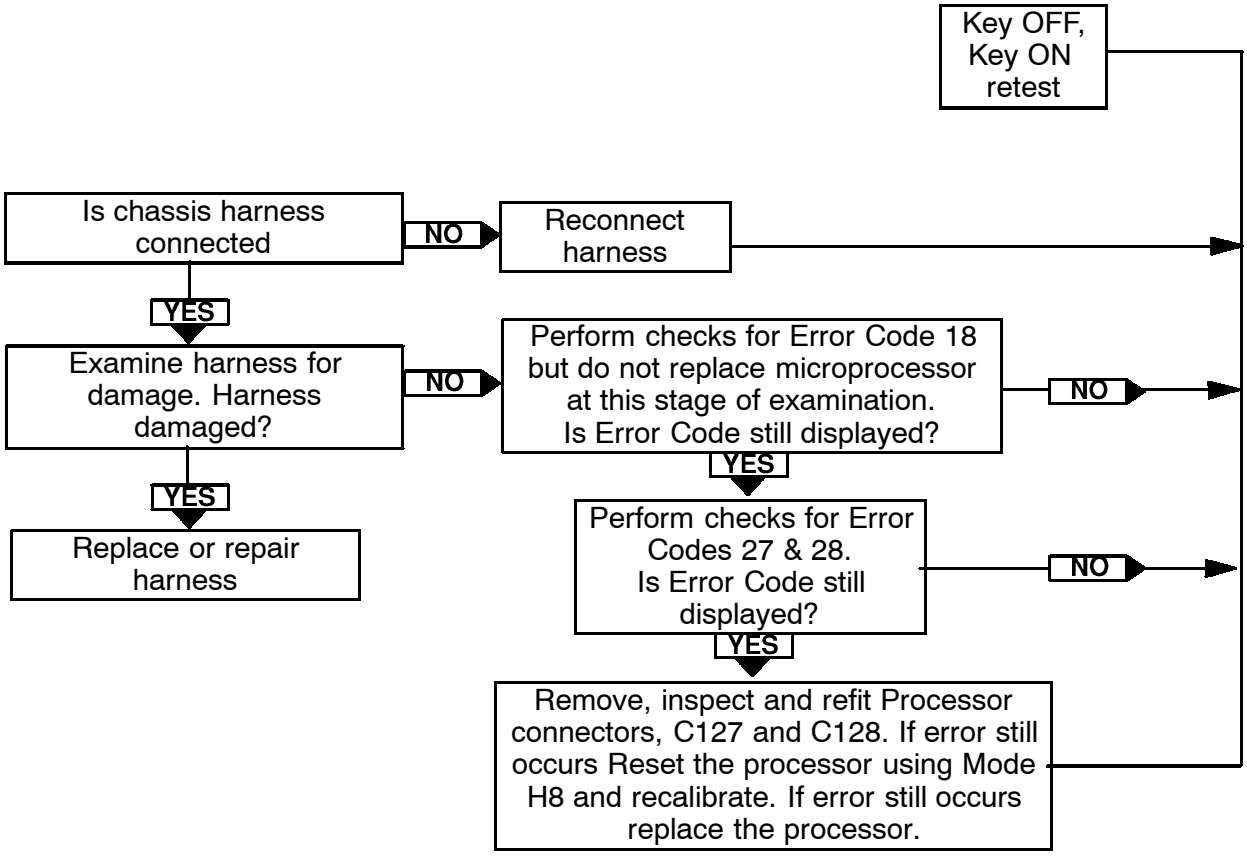

ERROR CODES 49 - Wheel speed sensor open or short circuit

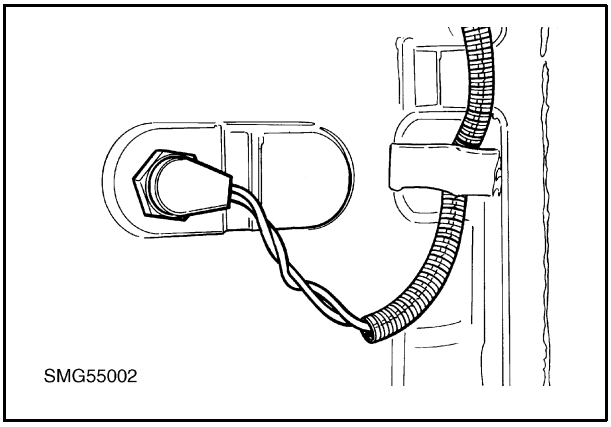

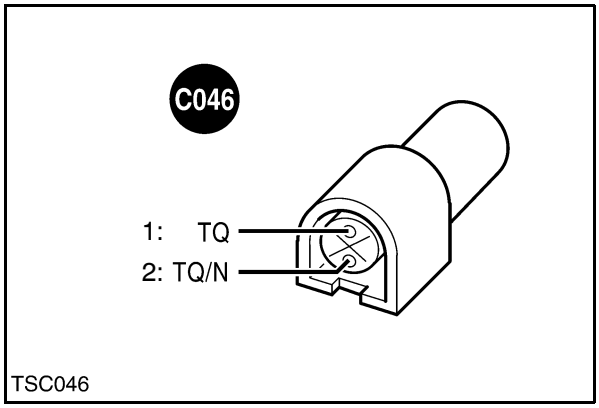

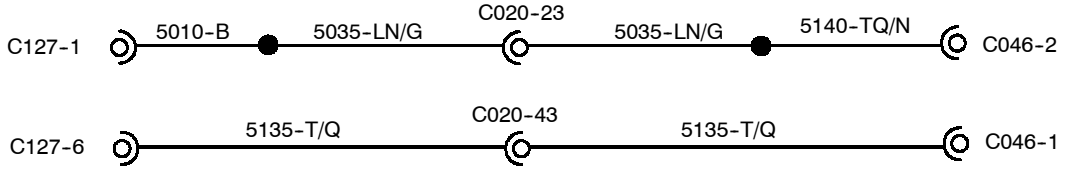

ERROR CODES 49 – Wheel speed sensor open or short circuit

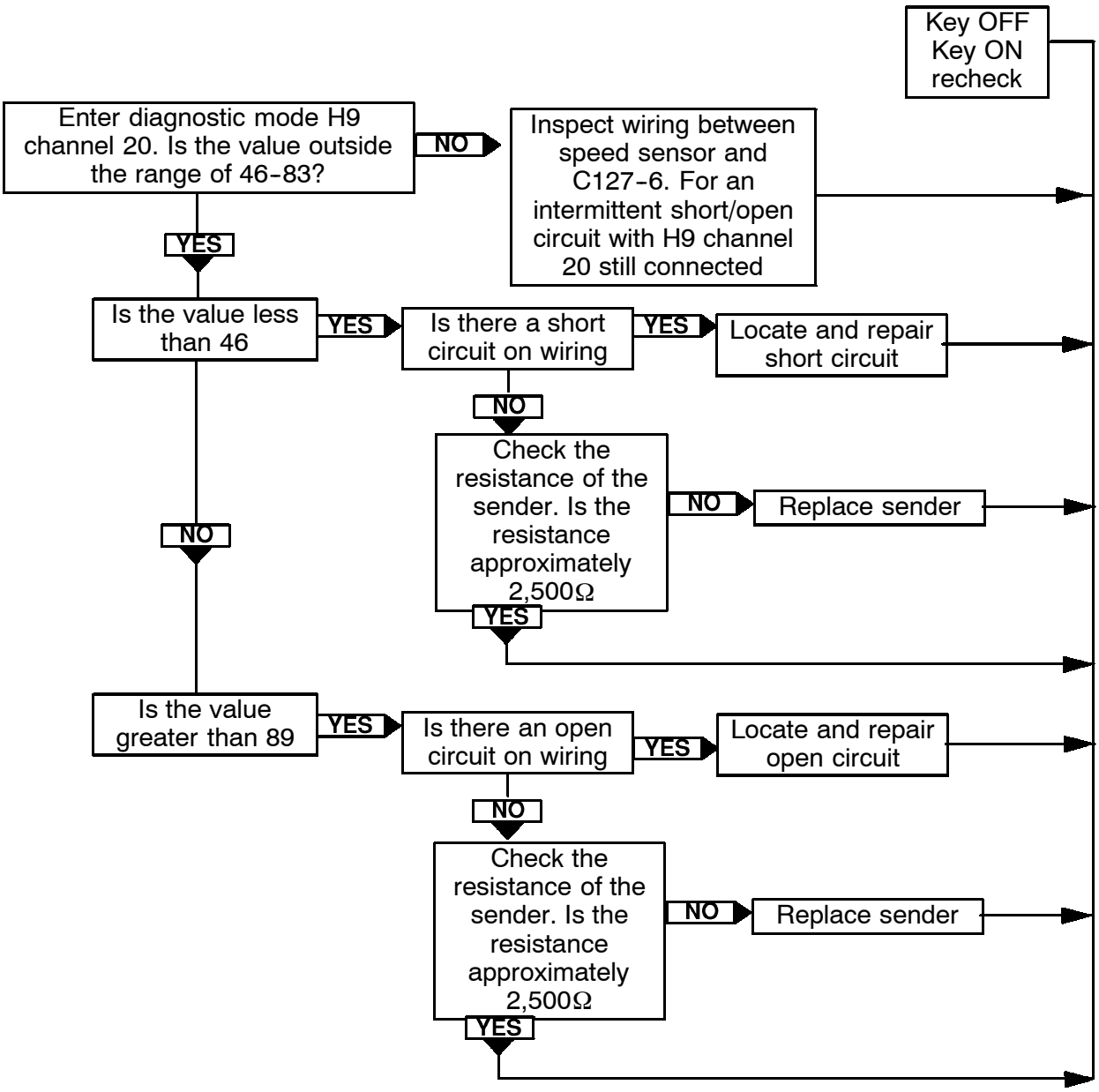

ERROR CODES 53 – Microprocessor 5 volt reference shorted to 12 volt supply

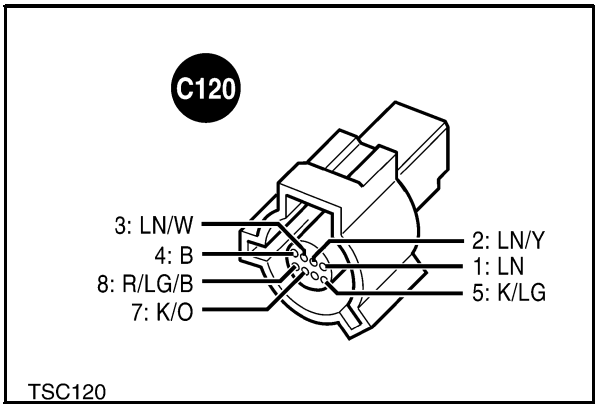

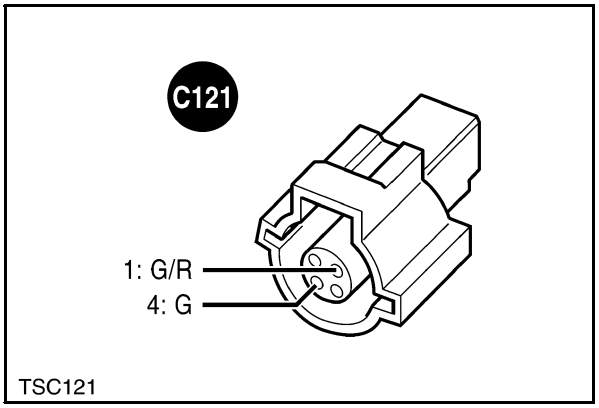

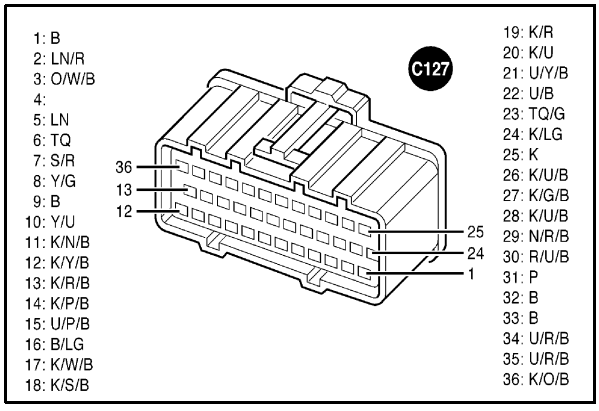

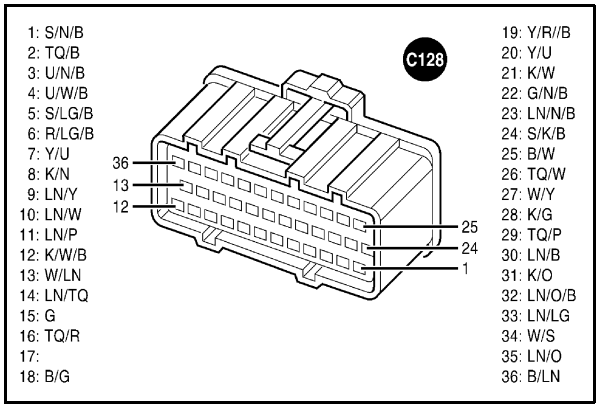

ERROR CODES 53 – Microprocessor 5 volt reference shorted to 12 volt supply

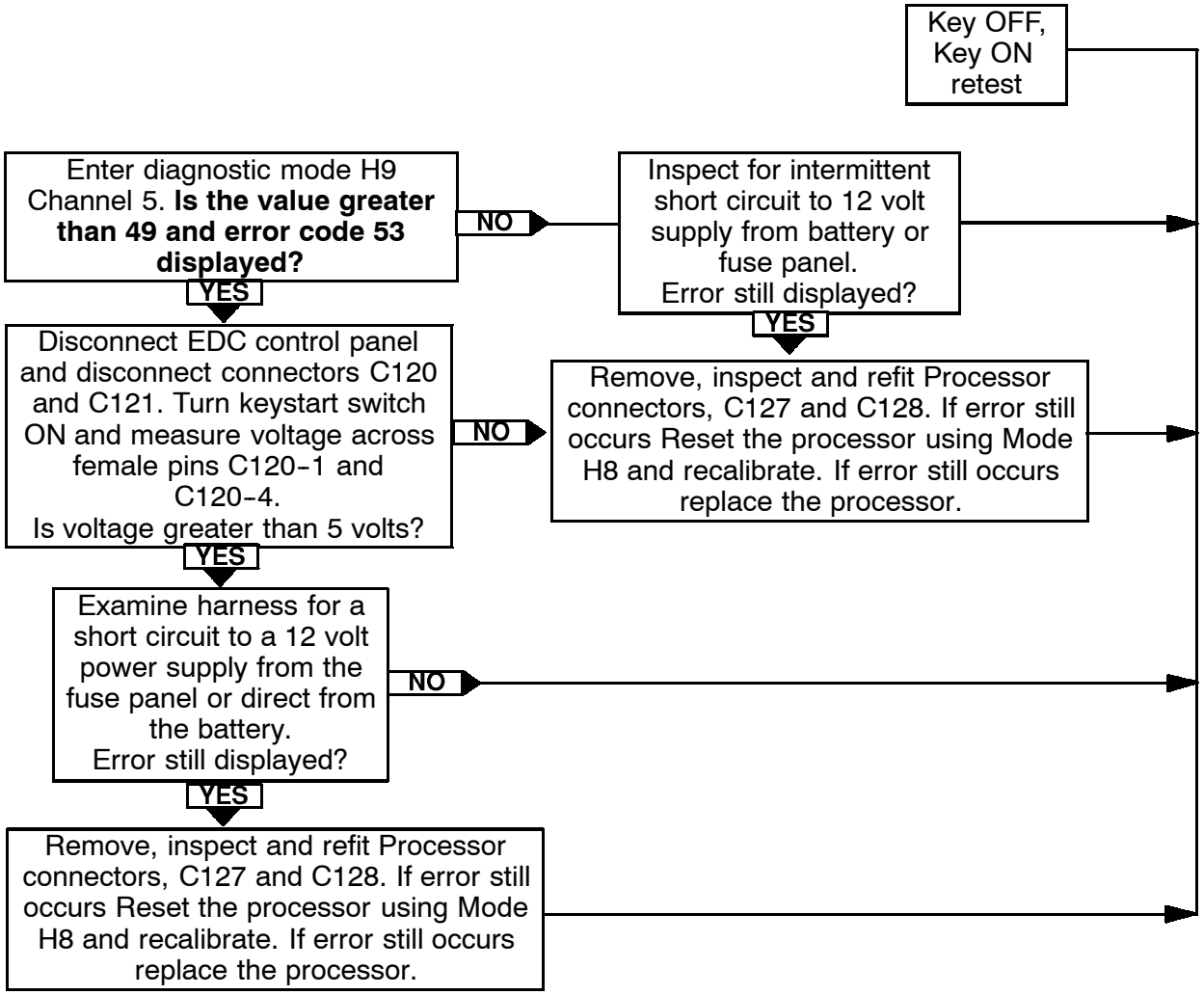

ERROR CODES 54 – Microprocessor 5 volt reference shorted to ground

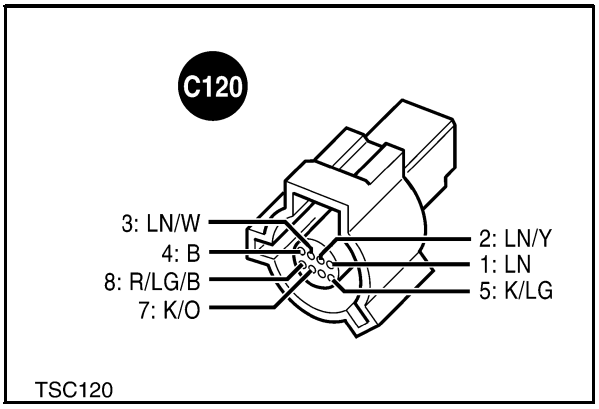

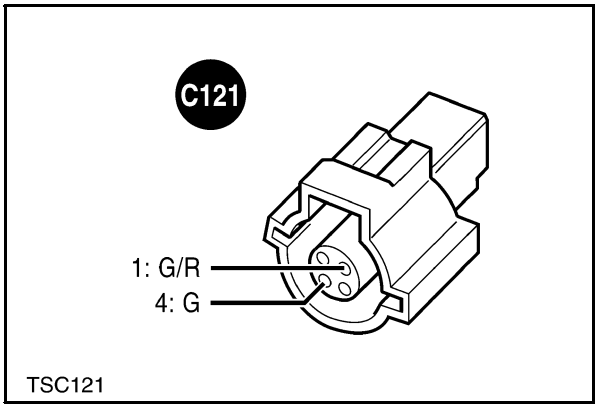

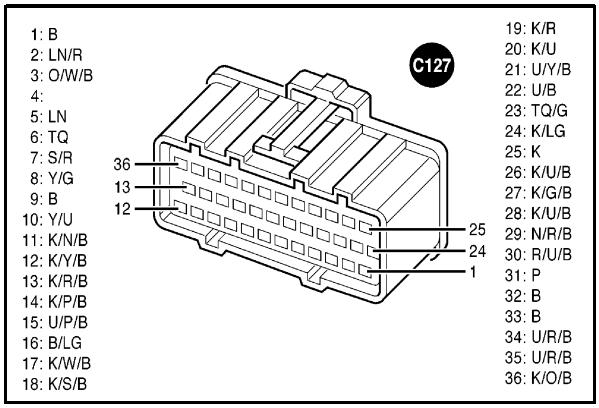

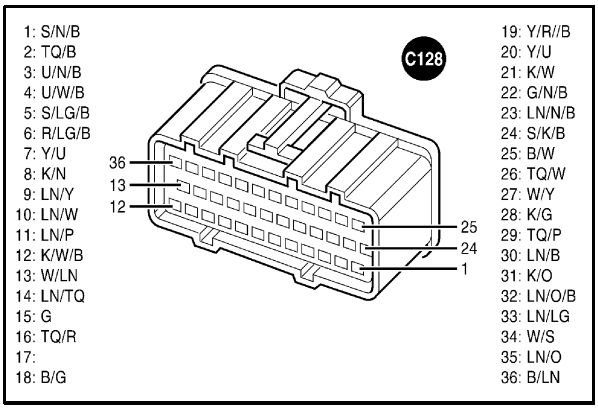

ERROR CODES 54 – Microprocessor 5 volt reference shorted to ground

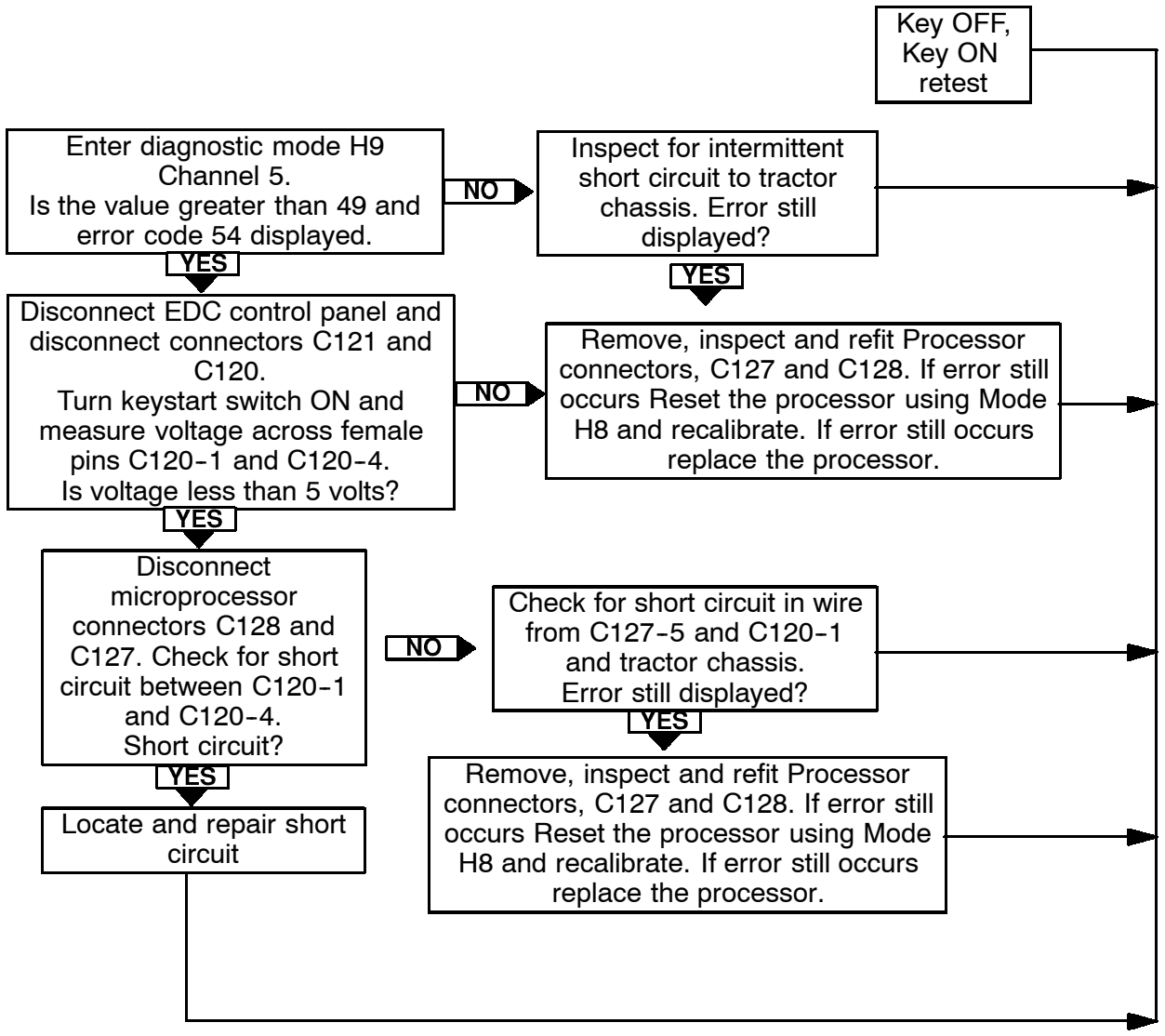

ERROR CODES 57 – EDC Microprocessor failure

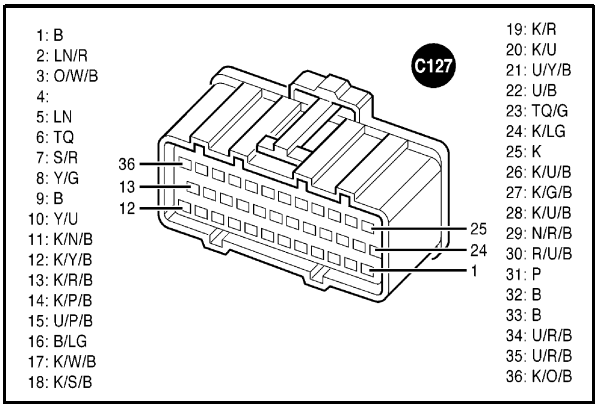

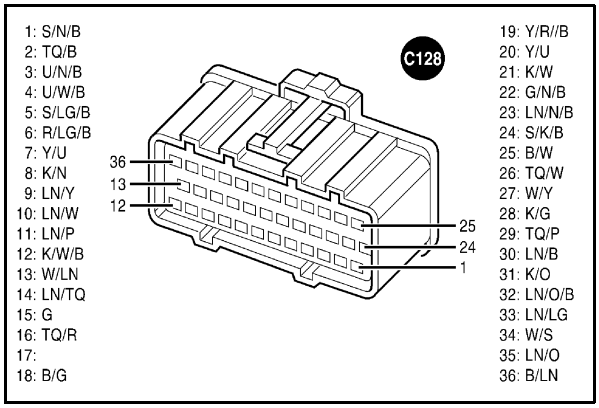

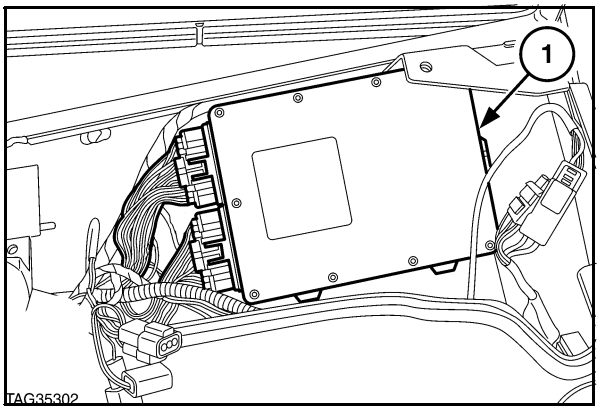

ERROR CODES 57 – EDC Microprocessor failure

Remove, inspect and refit Processor connectors, C127 and C128. If error still occurs Reset the processor using Mode H8 and recalibrate. If error still occurs replace the processor.

Check and replace fuse 14 if necessary

ERROR CODES 59 – Microprocessor reference voltage open circuit.

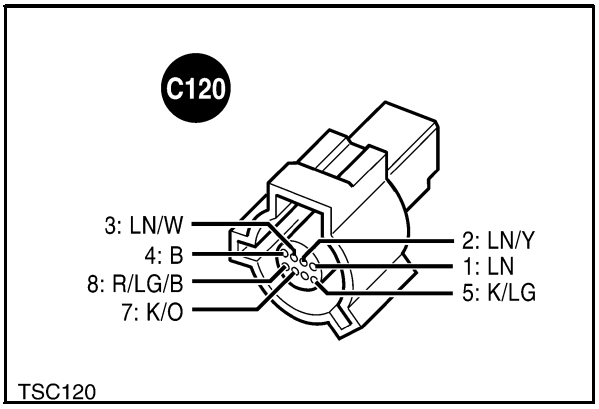

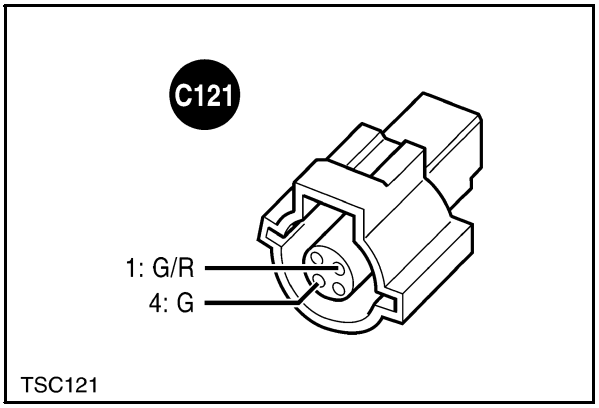

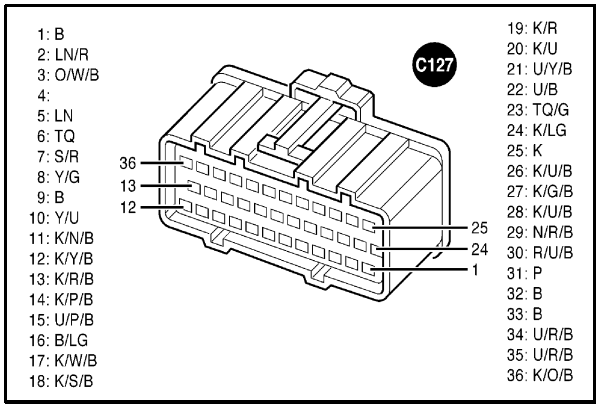

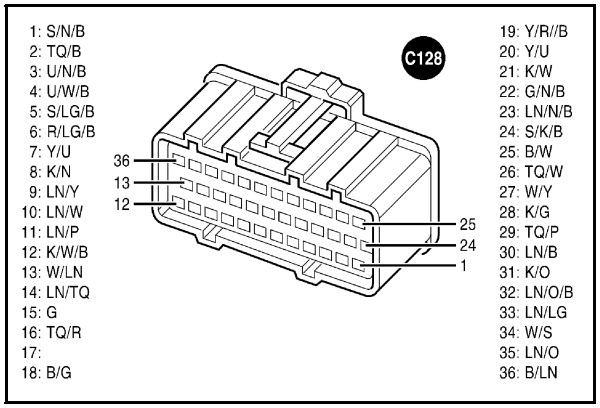

ERROR CODES 59 – Microprocessor reference voltage open circuit.

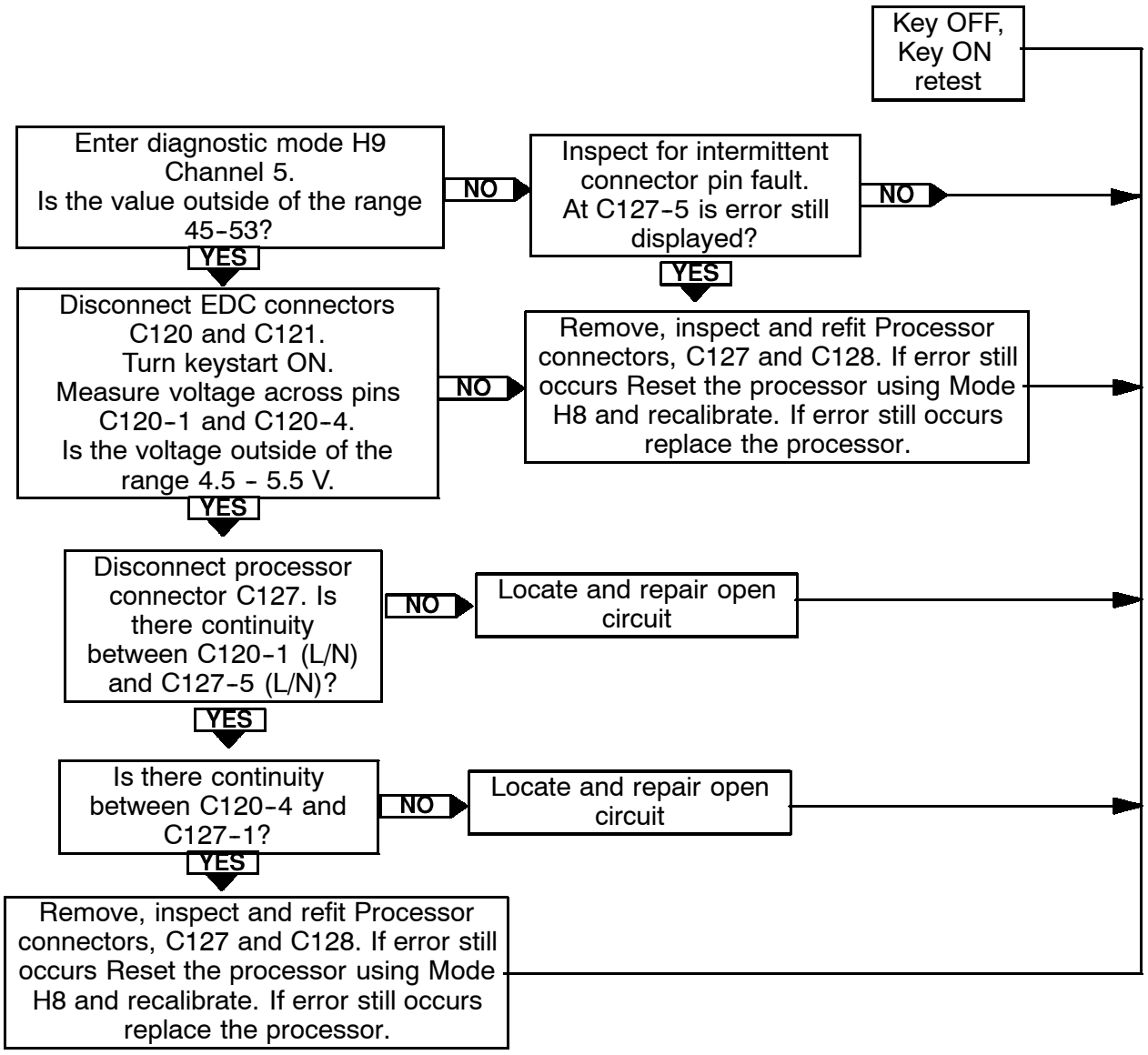

ERROR CODES 63 – EDC hydraulic valve lower solenoid Open Circuit
65 – EDC hydraulic valve lower solenoid Short Circuit

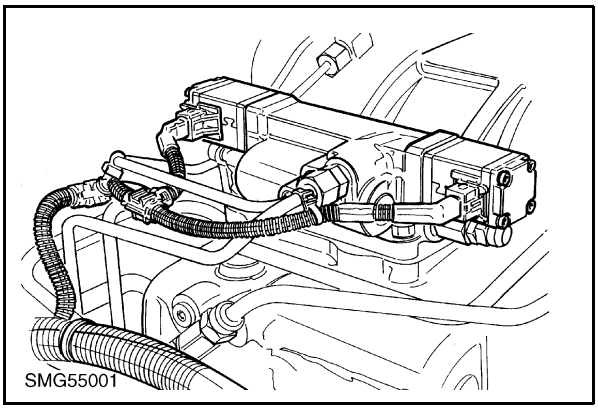

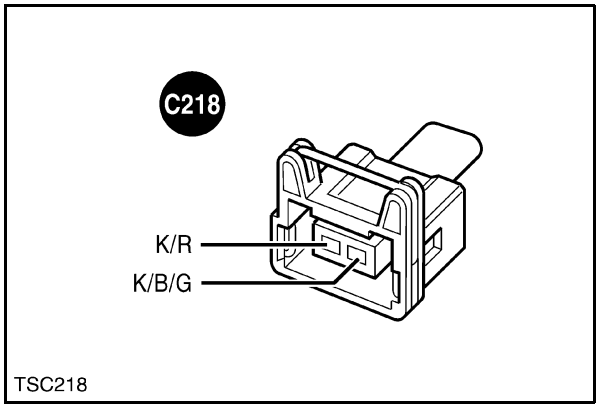

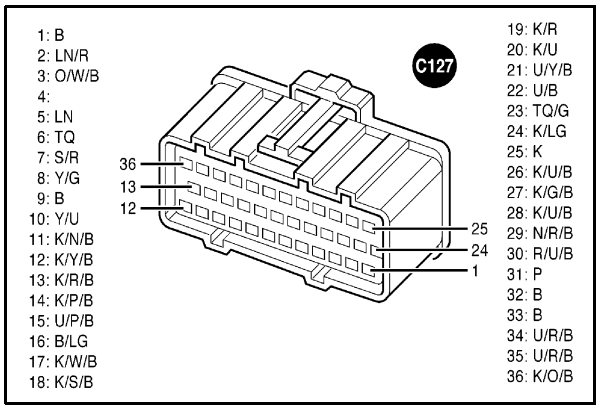

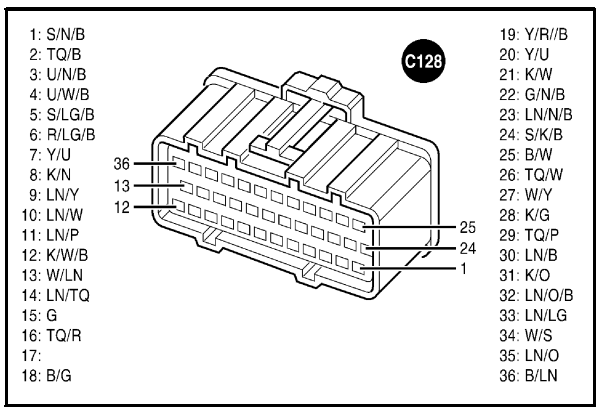

ERROR CODES 63 – EDC hydraulic valve lower solenoid Open Circuit
65 – EDC hydraulic valve lower solenoid Short Circuit

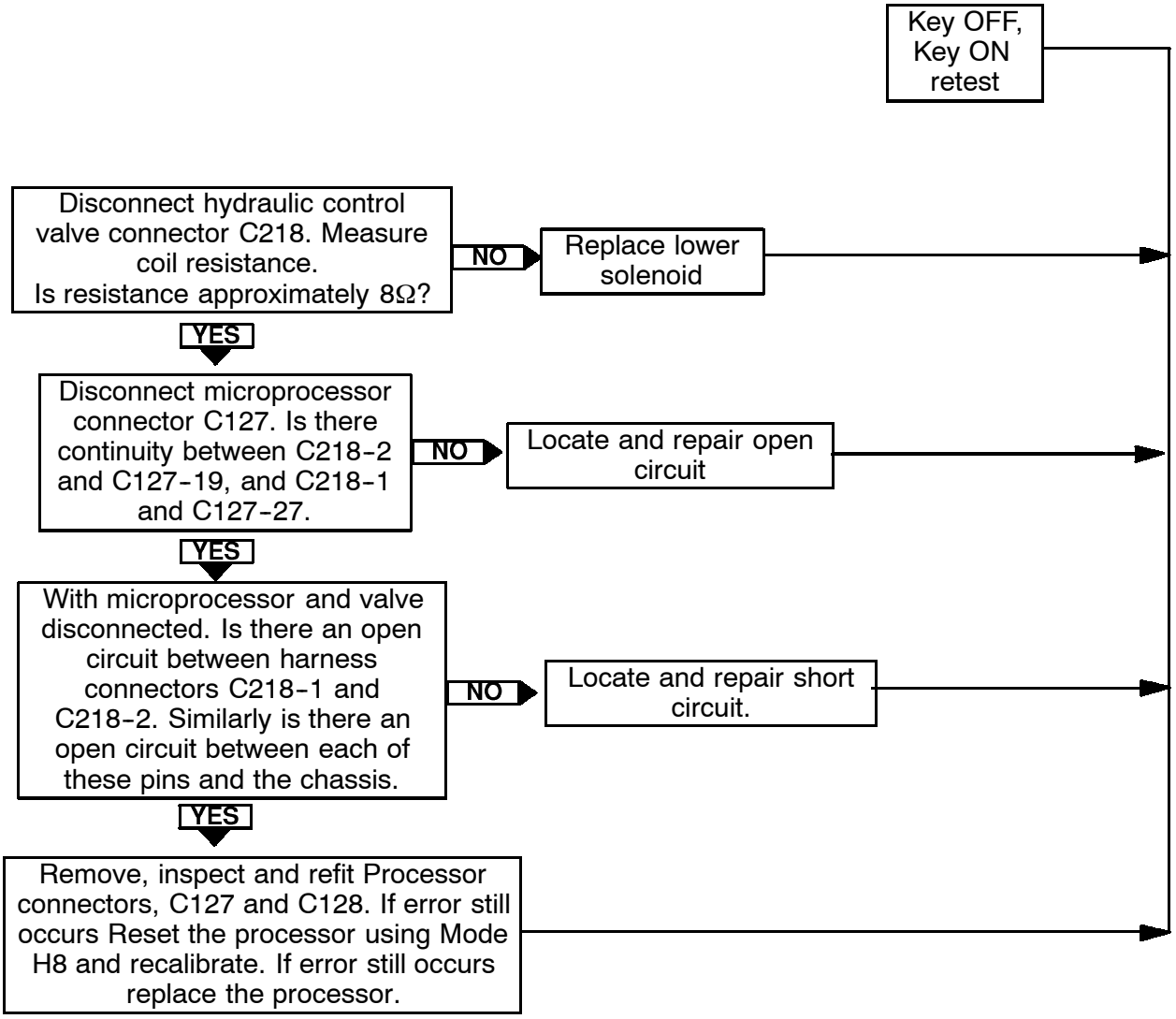

ERROR CODES 64 – EDC hydraulic valve Raise solenoid Open Circuit
66 – EDC hydraulic valve Raise solenoid Short Circuit

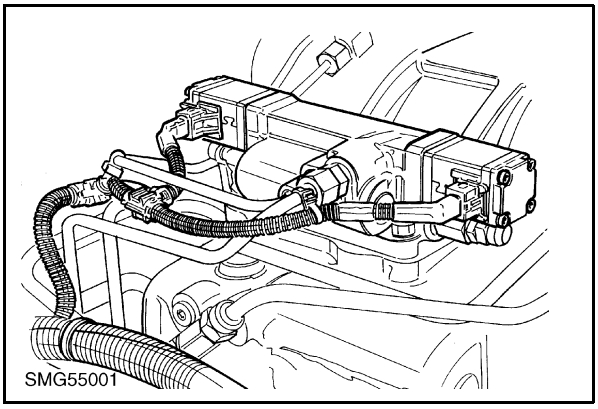

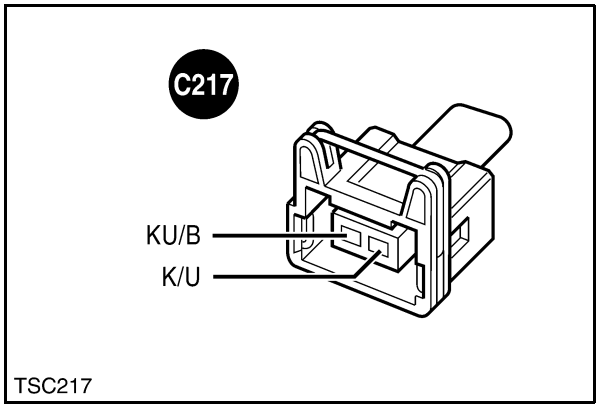

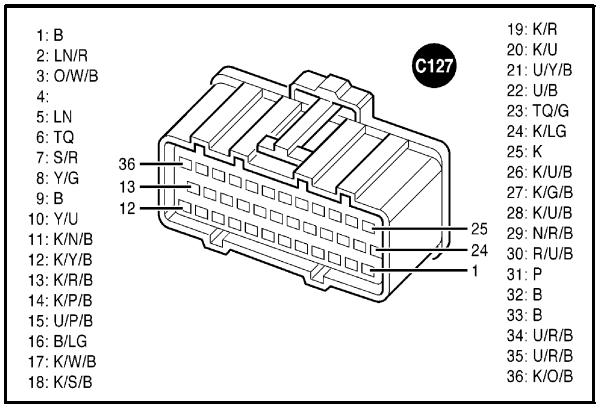

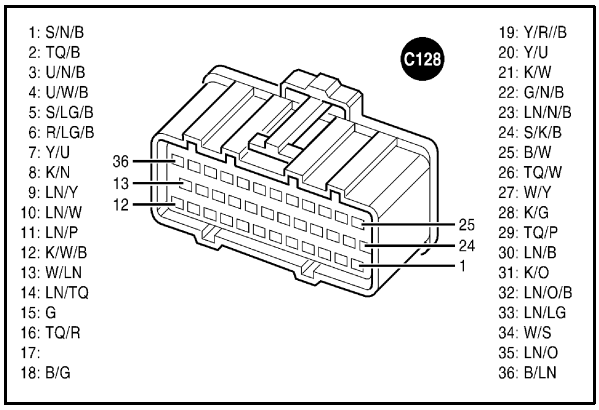

ERROR CODES 64 – EDC hydraulic valve Raise solenoid Open Circuit
66 – EDC hydraulic valve Raise solenoid Short Circuit

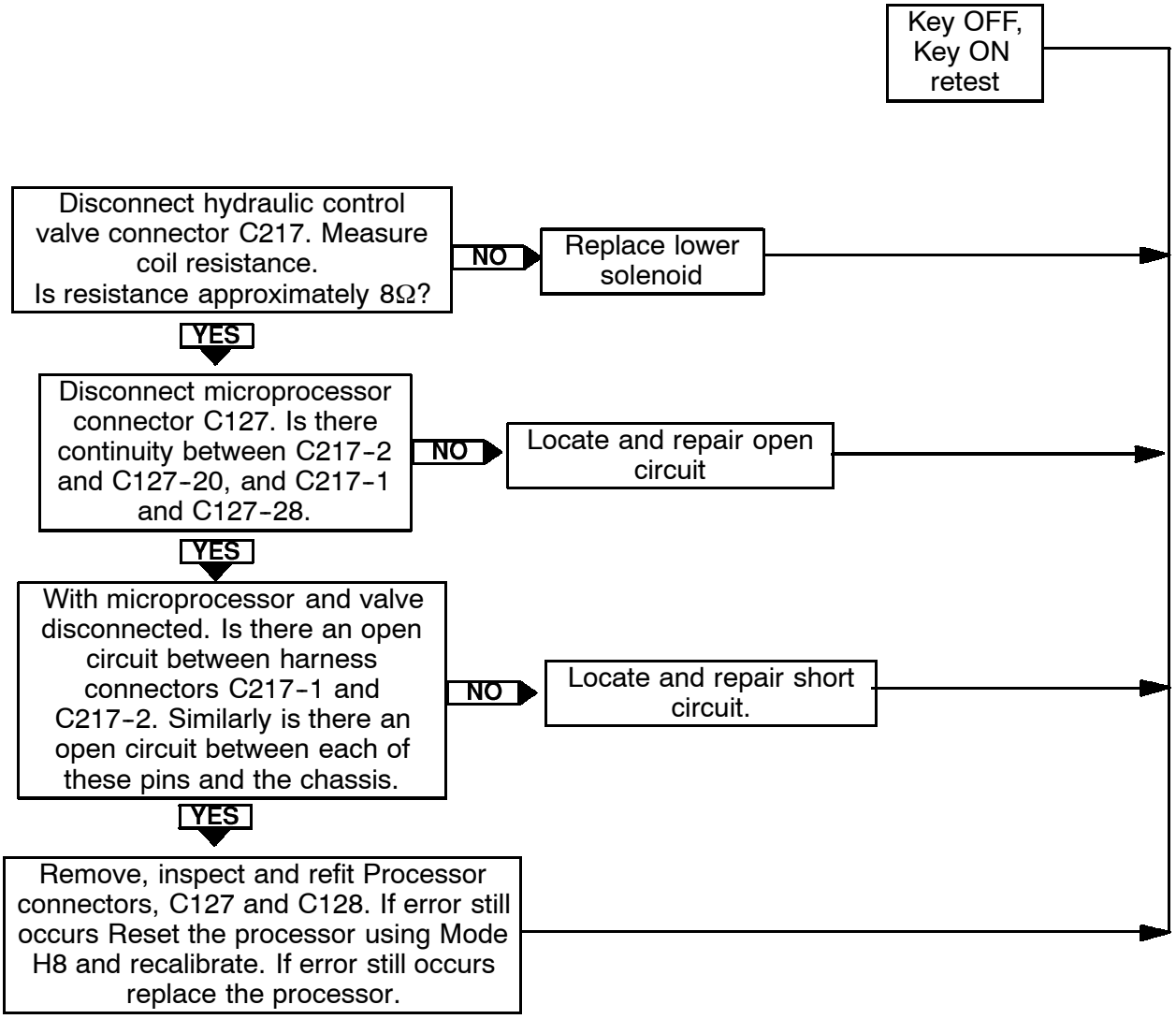

ERROR CODES 67 – EDC Hydraulic valve supply voltage too low

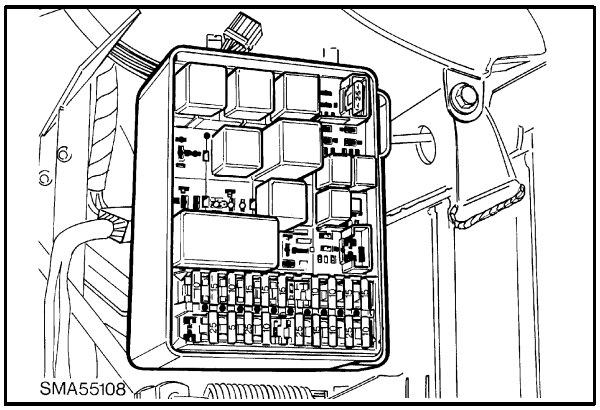

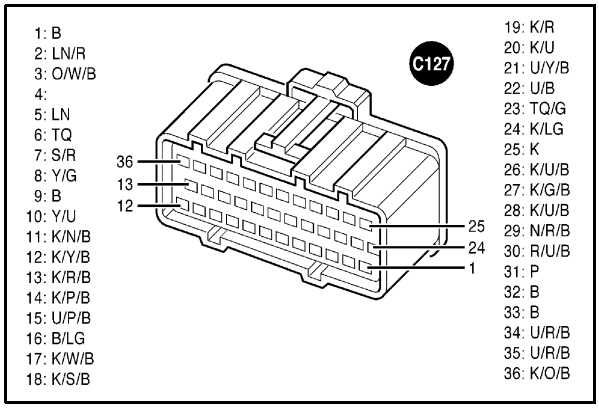

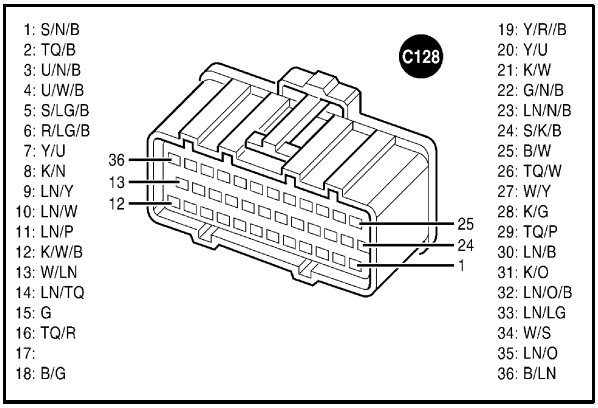

ERROR CODES 67 – EDC Hydraulic valve supply voltage too low

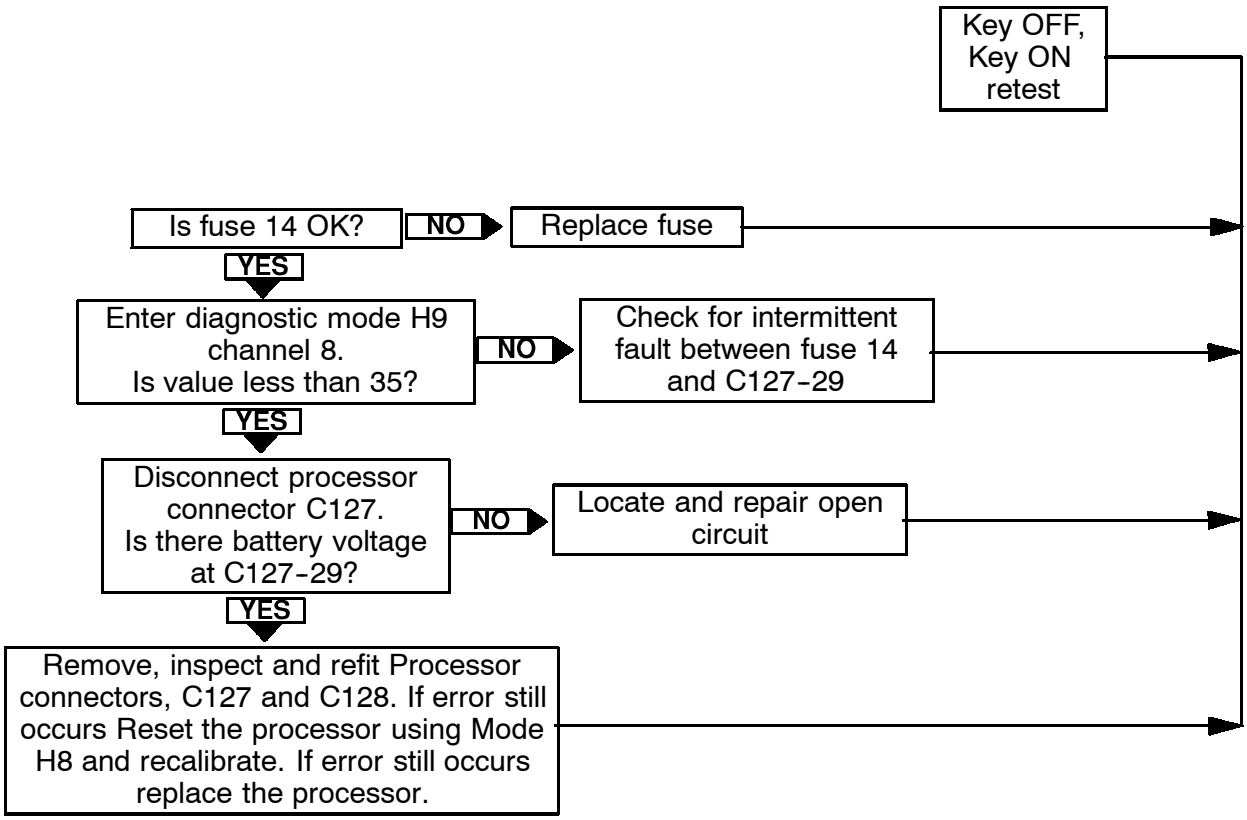

Fault Diagnostic Chart For Miscellaneous Hydraulic Lift Concerns

SYMPTON	POSSIBLE CAUSE	ACTION
Hydraulic lift will not operate.	No pilot pressure to EDC hydraulic control valve.	Perform low pressure circuit tests. Refer to Section 4
	No load sensing signal.	Tractors with CCLS Pump Check load sensing valve for sticking. Tractors with Open Centre Gear Pump Examine unload valve for sticking
	EDC load check valve sticking,	Examine load check valve.
Hydraulic lift will not lower.	Load check valve piston sticking.	Examine load check piston.
	Control valve spool sticking.	Examine spool.
	Lowering solenoid spool sticking.	Examine solenoid spool and torque of solenoid retaining screws.
	EDC Valve out of adjustment.	Examine spool adjusters for signs of tampering. Check valve calibration values using diagnostic routine H2.
Lift arms erratic, Slow or move when not in operation.	EDC valve receiving electronic signal.	Disconnect EDC valve connector and trace wiring fault if arms remain stationary.
	Pilot or control valve spools sticking.	Examine pilot and control valve spools for sticking or wear.
	EDC valve out of adjustment or incorrect valve fitted.	Examine spool adjusters for signs of tampering. Check valve calibration values using diagnostic routine H3 Check correct EDC valve fitted
Lift arms slowly drop when held in raised position with engine Off.	Check valve leaking.	Examine check valve poppet ball seat for wear.
	Lift Cylinder safety valve leaking	Examine safety valve
Cannot lift heavy loads.	Pump worn or lift cylinder seals leaking.	Perform hydraulic pump flow and pressure tests. Refer to Section 3
	Unload valve sticking (Open centre hydraulics only)	
Hydraulic lift will not raise or lower to maximum limits of travel.	Microprocessor incorrectly calibrated.	Perform memory reset and autocalibration procedure. See Error Code 24.

HYDRAULIC LIFT COVER ASSEMBLY–OVERHAUL

REMOVAL

1. Lower lift arms.

2. Less Cab Tractors Only:
   Remove platform to gain access to hydraulic lift cover.

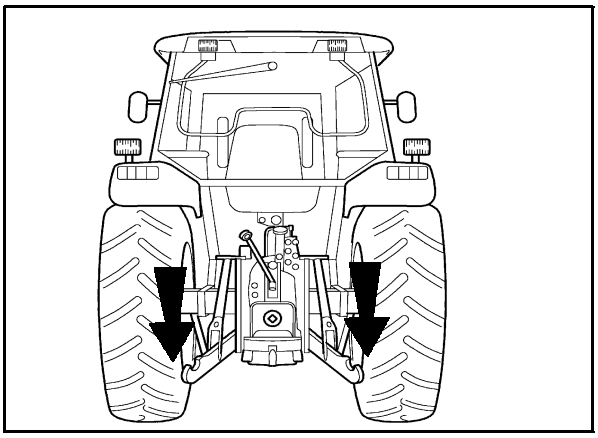

142

3. Disconnect hydraulic connections to assist rams (5) (where fitted) and disconnect ram(s) from lift arms, Figure 143.

4. Disconnect lift rods (2), (3) & (4) from lift arms.

5. Remove remote control valves (1).

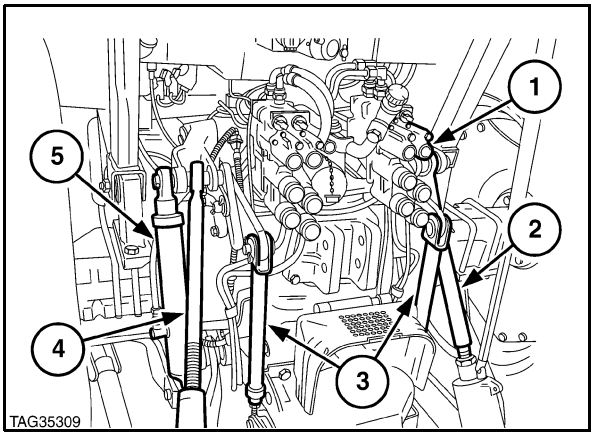

143

6. Remove load sense lines (5) to remote and hydraulic control valves, Figure 144.

7. Remove hydraulic control valve pilot pressure feed tube (4).

8. Remove trailer brake coupler and feed tube (1).

9. Remove assist ram feed tubes (2).

10. Remove rear axle dipstick tube retaining bolt.

11. Remove remote control valve feed and return tubes (3).

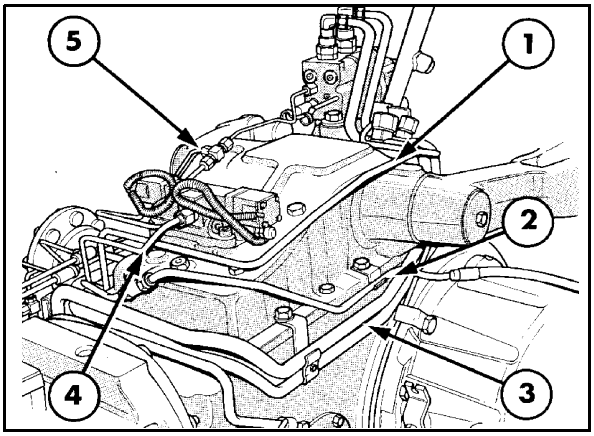

144

12. Remove hydraulic control (EDC) valve (1).

13. Remove hydraulic top cover retaining bolts.

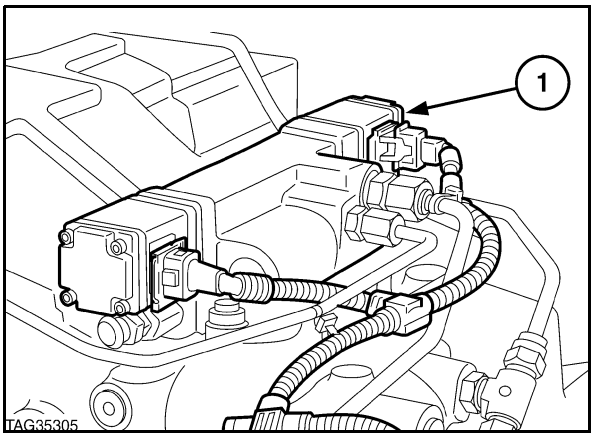

145

14. Disconnect connector (2) to lift arm position sensing potentiometer (1), Figure 146.

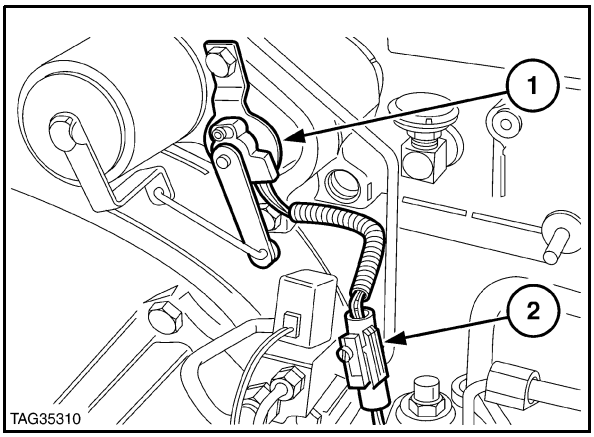

146

15. Using suitable lifting gear remove lift cover, Figure 147.

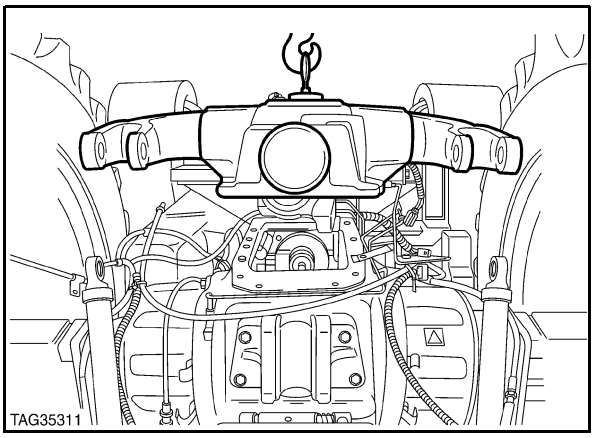

147

DISASSEMBLY

1. Remove four bolts (1) securing lift cylinder (2) to cover, Figure 148.

2. Move lift arms to raised position and carefully remove lift cylinder from locating dowels.

3. Remove lift cylinder safety valve and discard seal. Refer to Figure 149.

NOTE: *The lift cylinder safety valve is not serviceable.*

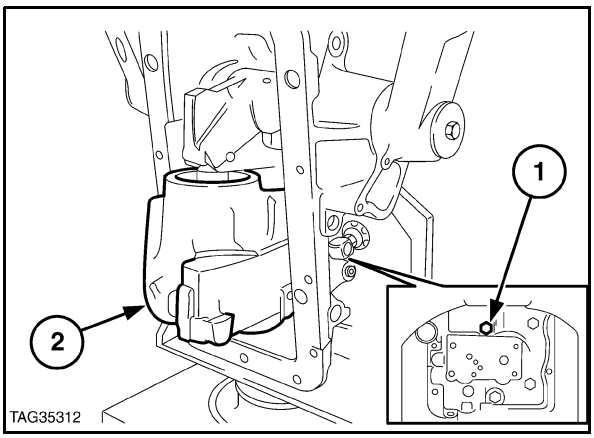

148

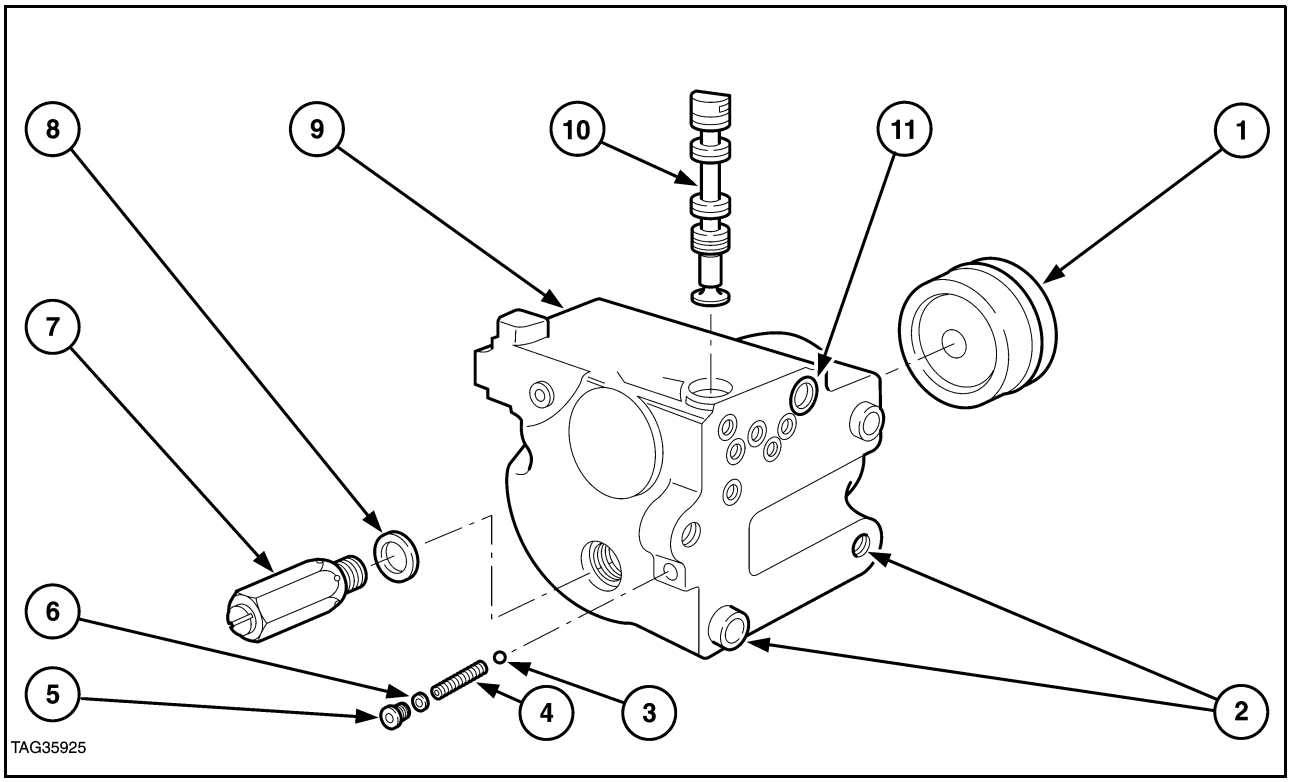

Hydraulic Lift Cylinder-Exploded View 149

1. Piston
2. Ring Dowels
3. Ball
4. Spring
5. Plug
6. 'O' Ring
7. Safety Valve
8. Seal
9. Lift Cylinder
10. ASC Valve Spool
11. 'O' Rings (7 off)

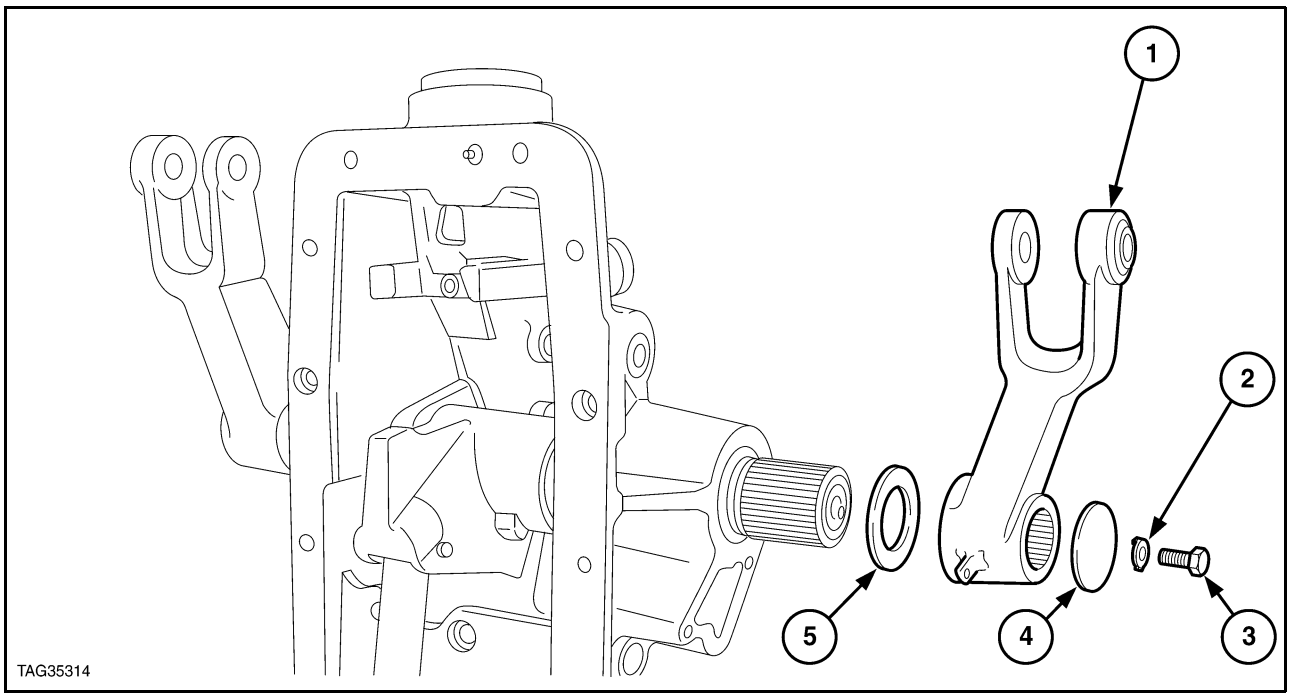

Lift Arm Assembly-Exploded View 150

1. Lift Arm
2. Locking Washer
3. Bolt
4. Washer
5. Washer

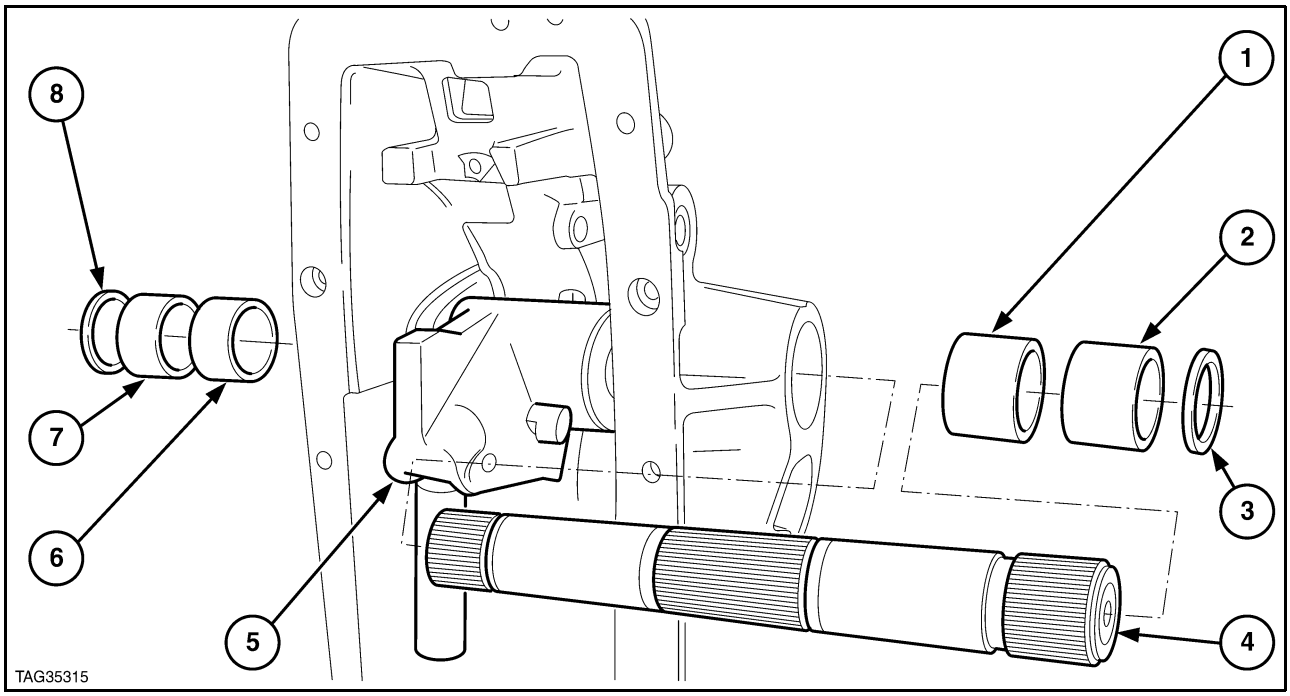

Cross Shaft and Arm Assembly-Exploded View

151

1. Bush
2. Bush
3. Seal
4. Cross Shaft
5. Piston Rod and Arm Assembly
6. Bush
7. Bush
8. Seal

4. Discard 'O' rings located in counterbores of oil passages.

5. Remove ASC valve detent plug ball and spring.

6. Remove ASC valve spool.

7. Push a soft metal rod through safety valve bore and eject lift cylinder piston. Discard piston 'O' ring seal and back up ring.

8. Remove lift arms. Refer to Figure 150.

9. Withdraw cross shaft assembly components. Refer to Figure 151.

10. If arm (2), piston rod (3) or retaining pins (1) & (4) are worn, separate rod and arm assembly, Refer to Figure 152. The pins are an interference fit into the arm. To remove pins use a suitable lever between rod and end face of pin.

11. Where necessary, remove remaining plugs from lift cover. Under normal circumstances the removal of these plugs is not necessary.

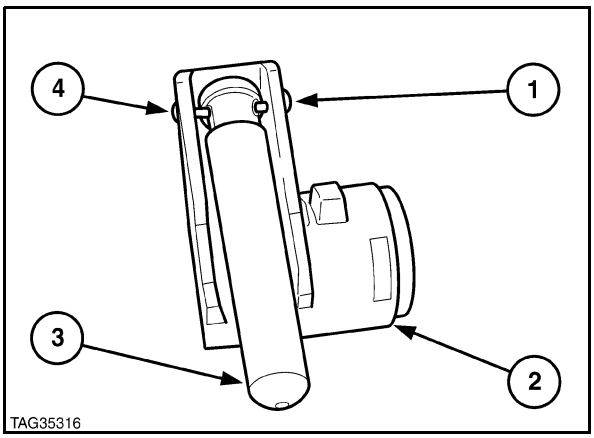

152

INSPECTION AND REPAIR

1. Wash all parts in suitable solvent.

2. Check oil passages are free from obstruction.

RE-ASSEMBLY AND INSTALLATION

Re-assembly and installation follows the disassembly procedure in reverse.

A master spline machined on the cross shaft ensures correct alignment of the both the lift arms and piston arm during re-assembly.

During re-assembly observe the following requirements.

- Renew all 'O' rings and seals.

- Install piston 'O' ring seal (1) closest to closed end of piston and back-up seal (2) nearest open end of piston (3), Figure 153.

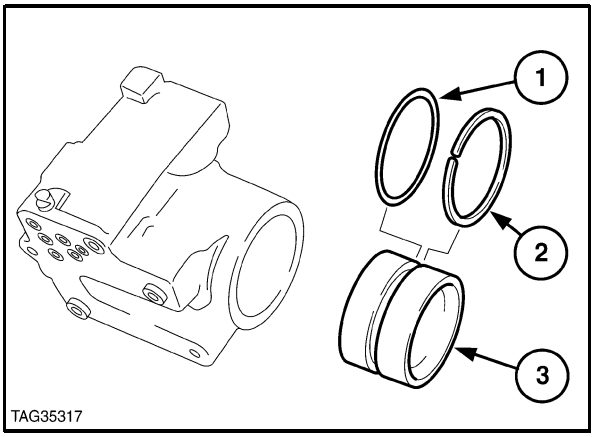

153

- To aid installation of piston into lift cylinder and prevent damage to the piston seals, a guide can be manufactured to the dimensions shown in Figure 154.

Piston Installation Guide

A. 4.126 inch (105 mm)
B. 5.25 inch (134 mm)
C. 0.12 inch (3 mm)
D. 1.62 inch (40 mm)
E. 6.0 inch (155 mm)

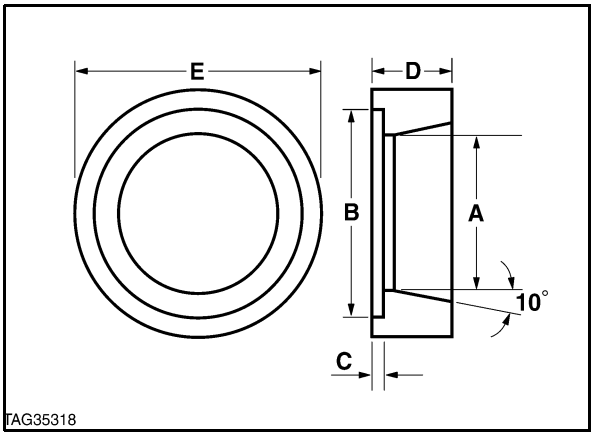

154

- Install piston (1) into cylinder (3) using guide (2) as shown in Figure 155. If a guide is not available and installation is difficult a piston ring compressor may be used to compress the seals.

- Coat cross shaft and lip seals with grease.

- Prior to installation of the hydraulic top cover, apply a thin bead of New Holland Gasket Sealant, Part No. 82995770, to **BOTH** sides of the hydraulic top cover gasket. The bead should be continuous around the entire face of the gasket and to a thickness of approximately 1/32 in (1mm).

- Tighten all retaining bolts to the correct torque and apply sealant to threads where specified. See Specifications.

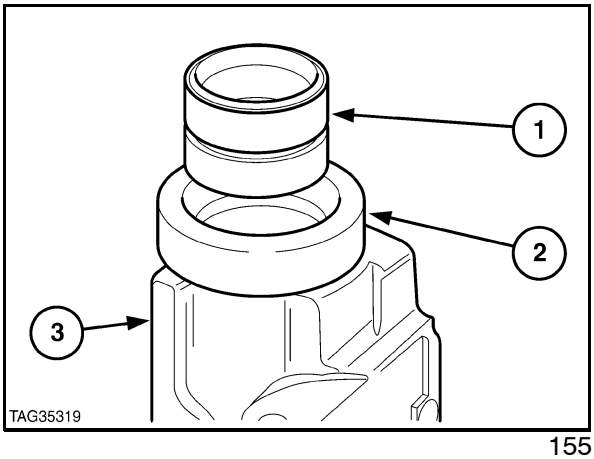

155

HYDRAULIC CONTROL VALVE-OVERHAUL

REMOVAL

1. Lower hydraulic lift arms.

2. Remove panel in cab/platform floor to gain access to hydraulic control valve (1), Figure 156.

3. Thoroughly clean the area around the valve prior to proceeding with the removal procedure.

4. Disconnect electrical connector to valve.

5. Disconnect pilot (2) and load sensing (3) lines.

6. Remove the four retaining bolts and lift the valve from the hydraulic top cover.

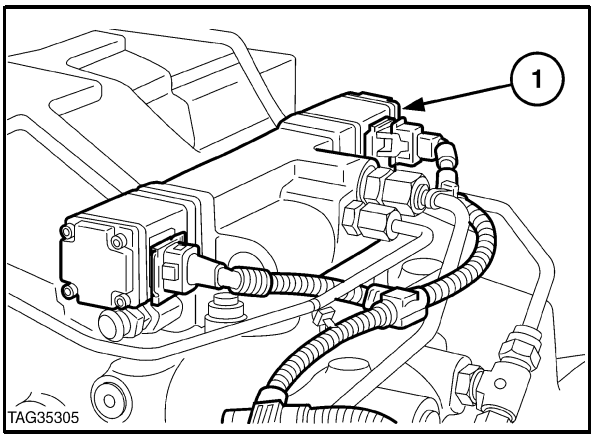

156

DISASSEMBLY

Solenoids and Pilot Spools

1. Identify lower (1) and raise (2) solenoids, to aid re-assembly, Figure 157.

2. Remove solenoids from valve.

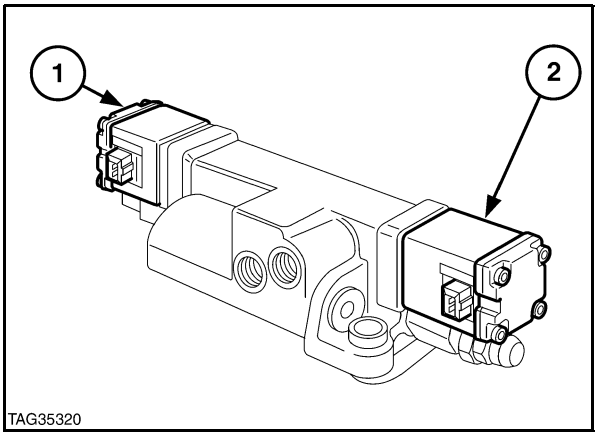

157

3. Separate solenoid components, Figure 158.

Solenoid Components-Exploded View

1. Field Coil
2. 'O' Ring
3. Plate
4. Solenoid Body
5. 'O' Ring
6. Ring
7. 'O' Ring
8. Allen Screws
9. End Cap
10. 'O' Ring
11. Core
12. Plunger

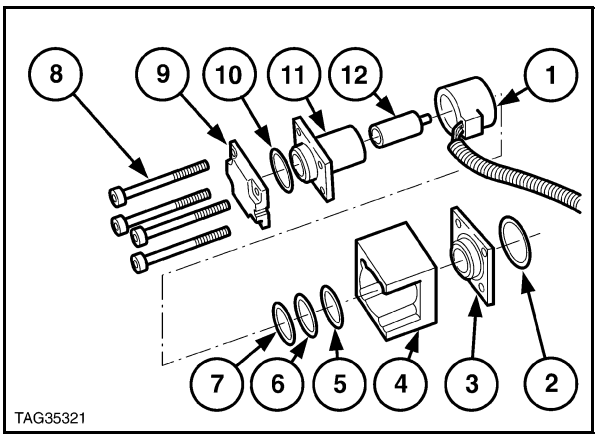

158

4. Remove pilot spool (1) and spring (2) from pilot operated valves, Figure 159.

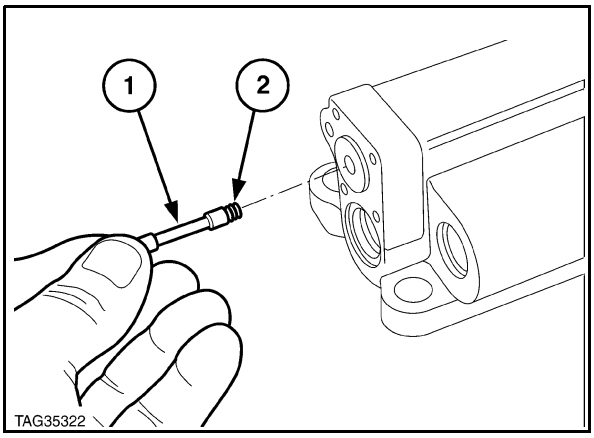

159

5. Insert a $^{5}/_{16}$ in UNF bolt (2) into end of pilot spool (1). Pull pilot spool from housing, Figure 160.

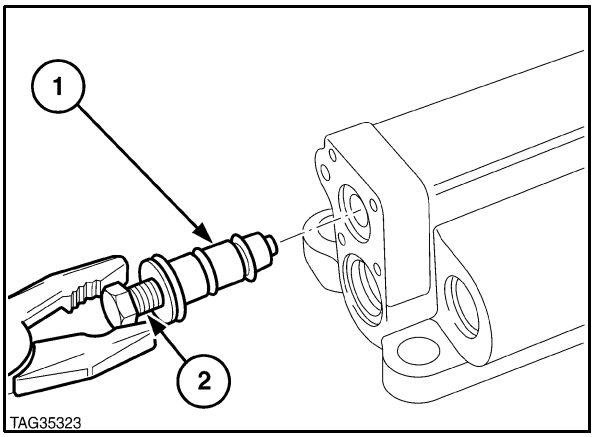

160

Main Spool

1. Using a suitable marker identify the right and left hand adjusters in relation to the valve housing body.

IMPORTANT: *Do not disassemble or reset the adjuster assemblies. The hydraulic control valve adjustment is pre-set at the factory and ensures that the spool is correctly set for the neutral position.*

2. Remove adjuster assemblies and withdraw spool centering springs and seats, Figure 161. Ensure that springs and seats remain matched with each adjuster.

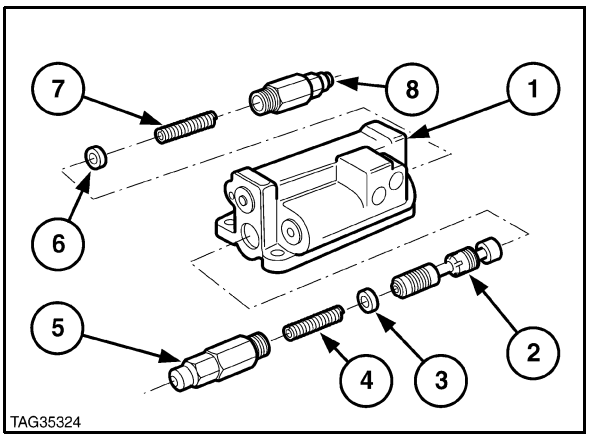

Main Spool 161

1. Valve Housing
2. Spool
3. Seat
4. Spring
5. Adjuster Assembly
6. Seat
7. Spring
8. Adjuster Assembly

Load Check Valve

1. Remove the load check valve plugs and withdraw the load check valve components, Figure 162.

NOTE: *The pin, item 7, is rounded on one end. When re-assembling the valve ensure the rounded end of the pin is inserted into the poppet, item 2.*

Load Check Valve

1. Valve Housing
2. Poppet
3. Ball
4. Guide
5. Spring
6. Plug and 'O' Ring
7. Pin
8. Piston
9. Plug and 'O' Ring

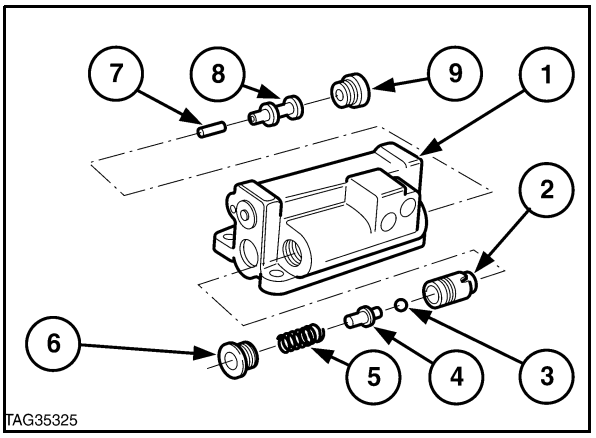

162

INSPECTION

The majority of valve failures occur because of dirt and other foreign matter entering the valve causing scoring and distortion. Minor imperfections can be corrected by using fine abrasive emery cloth or fine lapping compound. Exercise extreme care when abrasive materials are used to ensure that all particles are removed from the valve housing.

1. Wash all parts, except solenoids, in a suitable solvent and dry with compressed air.

2. Inspect the valve housing, bores and spools for evidence of scoring or damage, paying particular attention to the condition of the highly finished surfaces in the spool and sleeve bores. If deep scores or serious pitting is observed discard the valve. Remove minor blemishes from the spools or sleeves with fine abrasive.

3. Ensure the spools move freely in their bores.

4. Discard all 'O' ring seals.

RE-ASSEMBLY and INSTALLATION

Re-assembly follows the disassembly procedure in reverse. During re-assembly observe the following:-

- Lubricate the spools with hydraulic oil.
- Install new 'O' ring seals.
- Tighten all plugs and locknuts to the correct torque. See Specifications, Section E.
- When installing the solenoids, tighten the retaining screws gradually in a cross corner sequence to a torque of 15 lbf.in (1.7 Nm). **Do Not** overtorque the screws.
- Ensure 'O' ring seals (1) and (2) are correctly located around oil galleries on mounting face of hydraulic control valve before installing the valve onto the hydraulic lift cover, Figure 163.

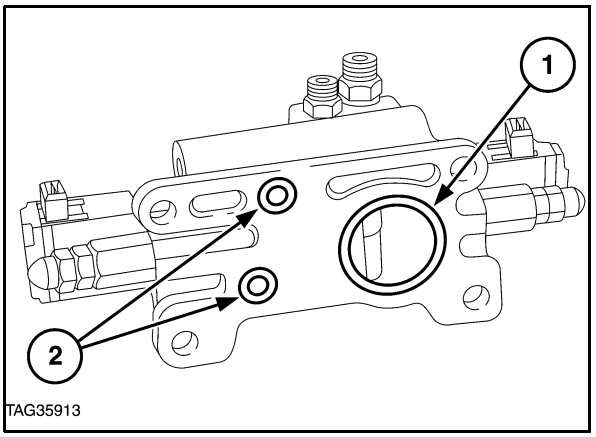

163

HYDRAULIC LIFT ASSEMBLY WITH TOP LINK SENSING

SPECIFICATIONS

MAXIMUM LIFT CAPACITY
THREE POINT LINKAGE

Maximum lift capacity – Manufacturers' figures to OECD criteria – links horizontal, maximum hydraulic pressure:

Models with 12 × 12 transmission – without assist rams

		TS90	TS100	TS110
at link ends	kg	2880	2880	n/a
	lb	6350	6350	n/a
24 in. to rear of link ends	kg	2227	2227	n/a
	lb	4910	4910	n/a

Models with 12 × 12 transmission – with one assist ram

at link ends	kg		4250	
	lb		9370	
24 in. to rear of link ends	kg		3211	
	lb		7080	

Models with 12 × 12 transmission – with two assist rams

at link ends	kg	n/a	n/a	5579
	lb	n/a	n/a	12300
24 in. to rear of link ends	kg	n/a	n/a	4273
	lb	n/a	n/a	9420

without assist rams

at link ends	kg	3045	3045	n/a
	lb	6713	6713	n/a
24 in. to rear of link ends	kg	2354	2354	n/a
	lb	5190	5190	n/a

Models with 16 × 16 transmission – with one assist ram

at link ends	kg		4492	
	lb		9904	
24 in. to rear of link ends	kg		3395	
	lb		7484	

Models with 16 × 16 transmission – with two assist rams

at link ends	kg	n/a	n/a	5897
	lb	n/a	n/a	13001
24 in. to rear of link ends	kg	n/a	n/a	4516
	lb	n/a	n/a	9957

ASC SELECTOR VALVE SIZES

Colour	Inches	mm
Green	0.6247–0.6244	15.8674–15.8598
Yellow	0.6244–0.6241	15.8598–15.8521
Blue	0.6241–0.6238	15.8521–15.8445
White	0.6238–0.6235	15.8445–15.8369
Blue/White	0.6235–0.6232	15.8369–15.8293

CONTROL VALVE SIZES

Colour	Inches	mm
Orange	0.5928–0.5927	15.057–15.055
Green	0.5926–0.5925	15.052–15.050
Yellow	0.5923–0.5921	15.044–15.039
Blue	0.5921–0.5919	15.039–15.034
White	0.5919–0.5917	15.034–15.029

CONTROL VALVE BUSHING SIZES

Colour	Inches	mm
Green/White	1.0014–1.0012	25.436–25.430
Orange	1.0012–1.0010	25.430–25.425
Green	1.0010–1.0008	25.425–25.420
Yellow	1.0008–1.0006	25.420–25.415
Blue	1.0006–1.0004	25.415–25.410
White	1.0004–1.0002	25.410–25.405
Blue\White	1.0002–1.0000	25.405–25.400

VALVE SETTINGS

Lift Cylinder Relief Valve 197–210 bar (2850–3050 lbf/in^2)

GASKET SEALER

Gasket Sealer 82995770

SPECIAL TOOLS

TOOL	V.L. CHURCHILL	FNH PART No (America Only)
Control Valve Bush Installer	FT. 8510	FNH 02191
Control Valve Bush Locator	FT. 8510–3	FNH 10090
Extension Tool	FT. 8510–1D	FNH 02191
Guide and Stop Adaptor	FT. 8510–1K	FNH 02191
Setting Gauge	FT. 8527	FT. 8527
Control valve Setting Tool		FNH 00014

Lift linkage setting gauge
FT8527 dimensions

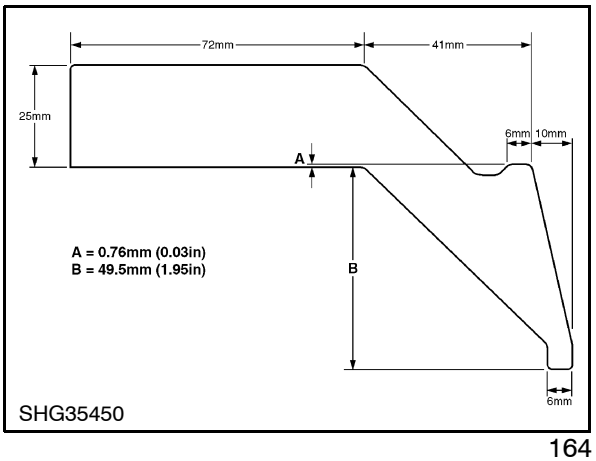

164

TORQUES

= **Nm**

= **lbf ft**

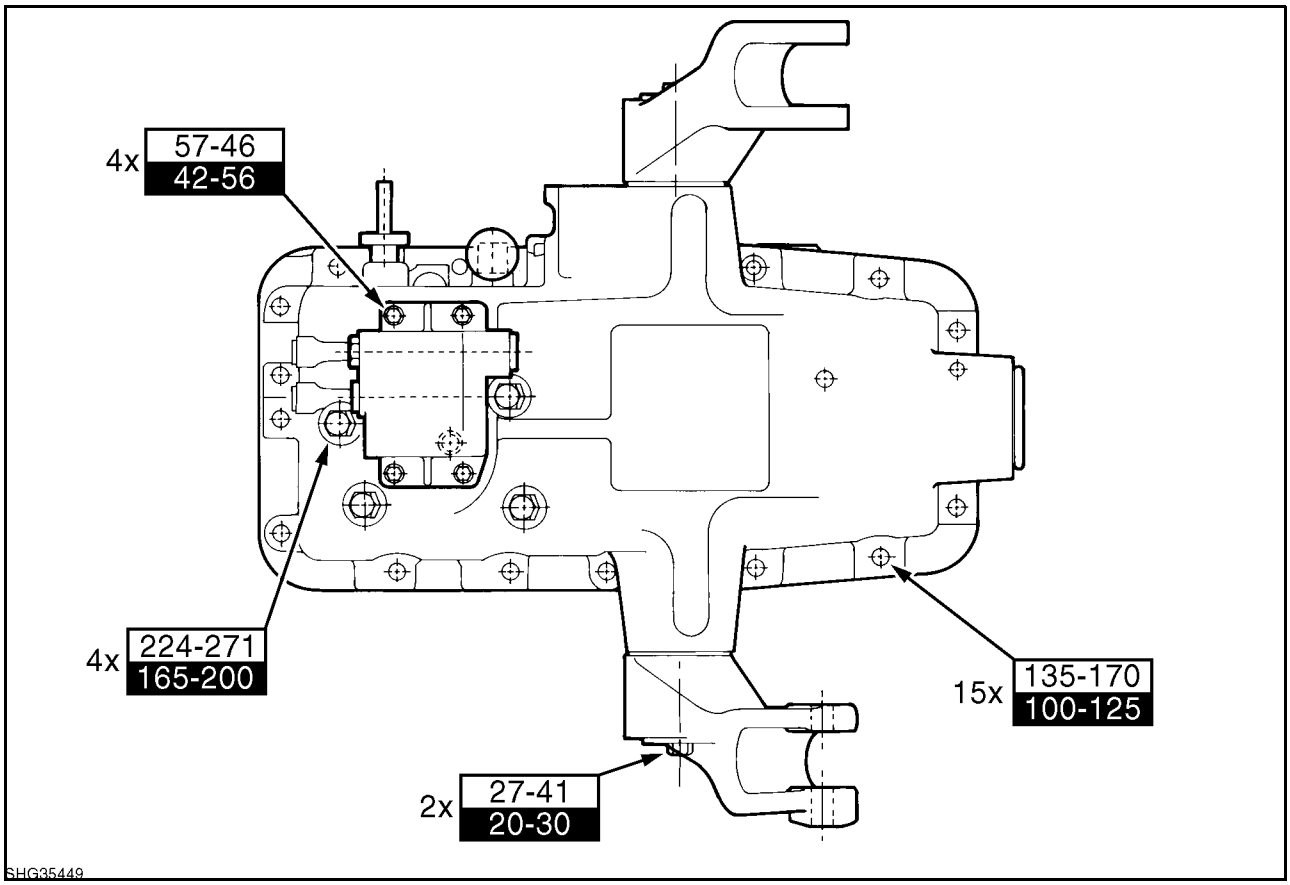

Components	**Nm**	**lbf.ft**
Lift Cylinder Relief Valve	102–122	75–90
Selector Support Bolts	57–76	42–56
Selector Body Turning Torque	9–14	7–10
Eccentric Shaft Locknut	20–27	15–20
Unload Valve Plug (CCLS Pump)	23–49	17–35
Yoke Retaining Nut Set Screw	27–34	20–25

FAULT FINDING

Over-Correcting or Bouncing

Symptom:	Cause:
Over correcting	When the hydraulic system is in neutral, a leak exists in the trapped oil circuit.
Bouncing	Due to internal linkage binding

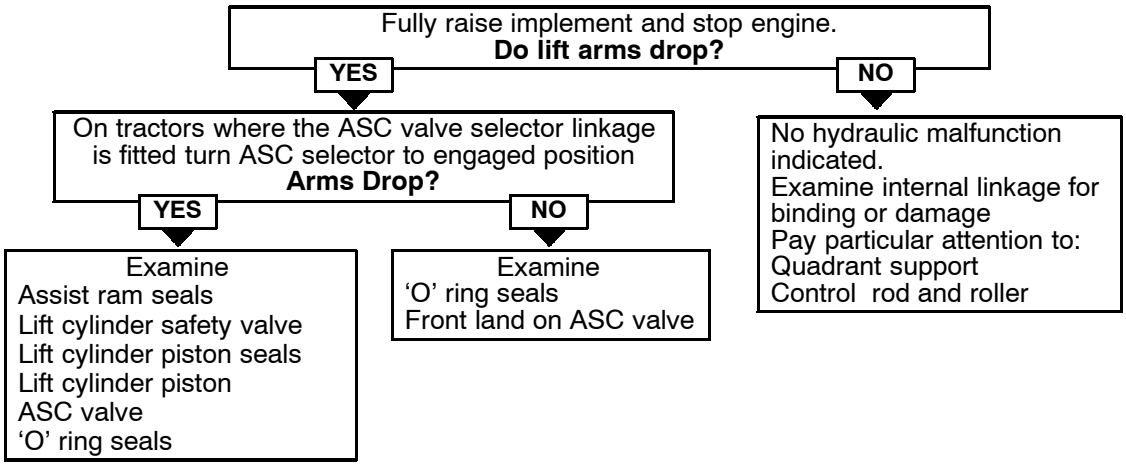

Note: On tractors not fitted with the ASC valve selector linkage perform the checks in both the **YES** and **NO** columns.
It should also be noted that although the ASC selector linkage may not be fitted the ASC valve located in the lift cylinder will be installed and must be pushed fully into its bore.

No or Slow Lift

On Tractors with variable displacement CCLS hydraulic pump slow lift may occur if there is an excessive demand on one of the hydraulic remote valves.

Slow lift will also occur on tractors with 16 x 16 transmission if the clutch pedal is depressed when the engine speed is below 1000 rev/min.

Is ASC valve pushed fully 'IN'?
On tractors without ASC valve linkage was the ASC valve pushed fully into position during any recent hydraulic lift cylinder overhaul

YES

Is external linkage obstructed or damaged?

NO

Is rear axle oil level low or incorrect grade?

NO

Are there external oil leaks?

NO

Attempt to lift an implement

No Lift

Pull out ASC Valve
Constant blowing of pressure relief valve?

NO

YES

Examine
Assist ram seals
Lift cylinder safety valve
Lift cylinder piston seals
Lift cylinder piston
ASC valve
'O' ring seals

Slow Lift

Pull out ASC valve and turn Off engine

NO **Lift Arms drop?**

YES

Examine
Assist ram seals
Lift cylinder safety valve
Lift cylinder piston seals
Lift cylinder piston
Lift cylinder safety valve
ASC valve
'O' ring seals

Pressure Test Hydraulic Pump
Is pump output to specification?

YES

Can an implement be lifted in either position or draft control but not both?

YES

Examine internal hydraulic lift linkage for binding or damage

NO

Tractors with fixed displacement hydraulic pump

Move the lift control lever to the raise position and operate a remote valve to pressurise the oil against the sealed couplers.
Does the hydraulic lift raise?

YES

Examine valves in priority valve pack for sticking

Tractors with variable displacement CCLS hydraulic pump

Examine unload valve for sticking

DESCRIPTION AND OPERATION

'Top Link Sensing' defines a hydraulic system where draft signals applied to an implement are sensed and transmitted mechanically via the rocker and control yokes to the hydraulic lift draft control mechanism by the 'Top Link' (2) of the three–point linkage, Figure 165.

This method of sensing draft loadings differs from that of the electronic draft control system where draft forces applied to an implement are sensed electronically using load sensing pins in the lower lift links.

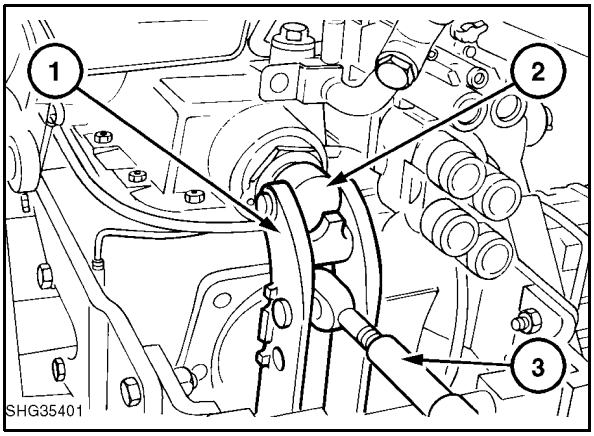

165

Implements attached to the 3 point linkage can be operated in either 'Draft' or 'Position' control using the levers positioned by the side of the drivers seat, Figure 166.

The lift control lever (5) raises or lowers the hydraulic lift to the desired position and the selector lever (1) enables the selection of full position control or draft control as required.

Full draft control is selected when the lever is positioned fully forward (3) and full position control when the lever is moved fully rearwards (2).

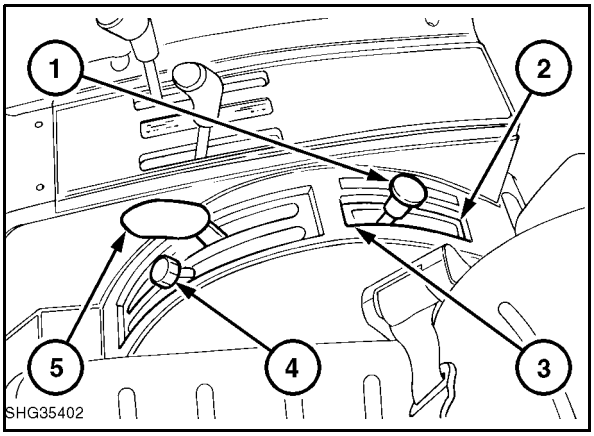

166

The sensitivity of draft control is adjusted by the position of the selector lever. As the lever is moved away from full draft control selection to full position control the degree of draft sensitivity reduces accordingly.

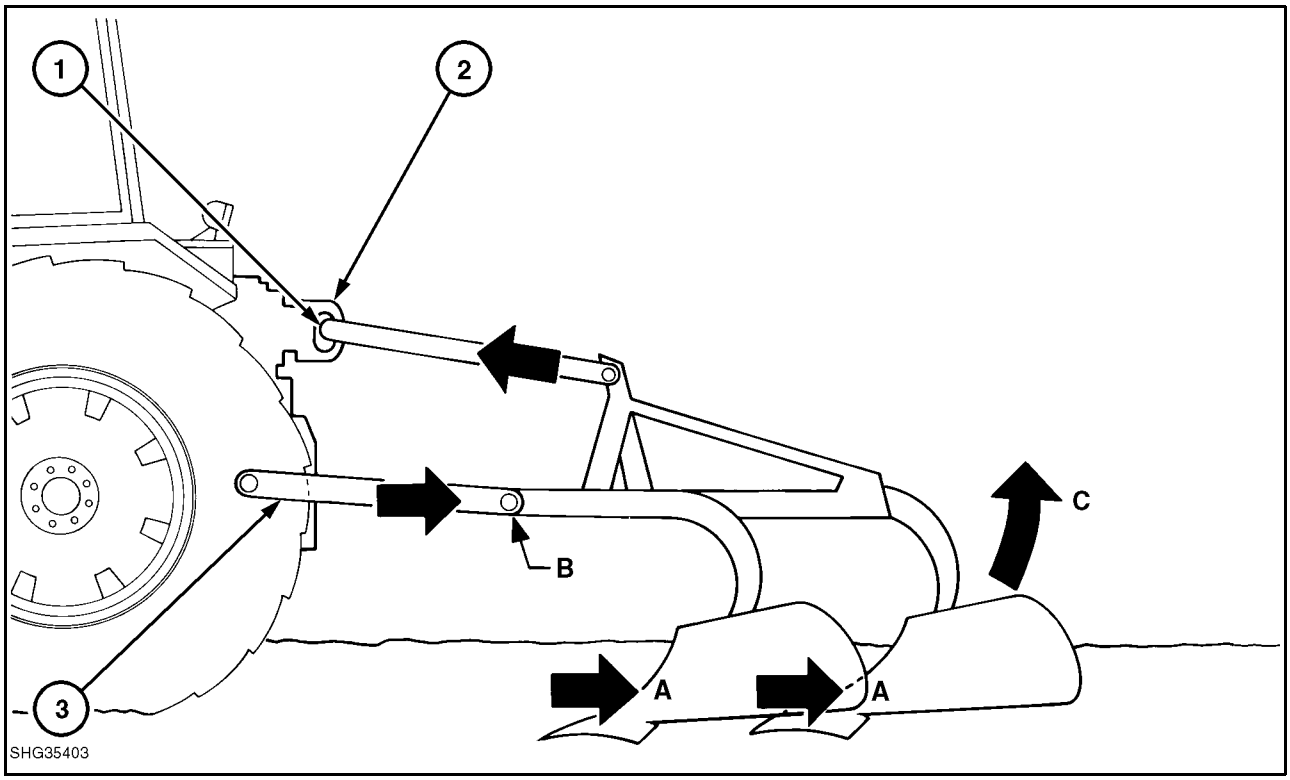

The Principal Of Draft Forces Applied Through The Hydraulic Linkage 167

1. Top Link (In Compression)
2. Lower Link (In Tension)
3. Draft Control Yoke

A. Draft Forces
B. Lower Link Pivot Point
C. Tipping Force

Principals of Draft Control

Draft control, manages the working depth of soil engaging implements in order that the implement maintains an even pull on the tractor.

When a soil engaging implement eg. a plough is lowered into the ground, the draft forces applied to the implement as it is drawn through the soil tends to make the plough pivot about the point where it attaches to the lower links, Figure 167. If the top link were removed then the plough would tip up, but due to the top link's resistance the plough stays level in the ground. This shows that there is a compressive force pushing the top link against the tractor housing.

The draft force will alter according to the depth of work and soil type. As the draft force increases, then so does the compressive force applied to the top link and if the draft force decreases the top link.

Using the selector lever, the operator can pre-set the required amount of draft sensitivity to be maintained on the implement during work and the hydraulic system maintains this draft by raising and lowering the implement within the soil accordingly.

When the draft force increases beyond that selected, the compressive force on the top link pushes the yoke further into the hydraulic lift cover and the hydraulic system raises the implement until the required amount of draft is restored. Similarly when the draft force is less than that required the compressive force on the top link reduces allowing the yoke to move out from the top cover. The hydraulic system now responds and lowers the implement until the required draft force is again restored.

When position control is selected the working depth or height of an implement relative to the tractor is pre-set by the internal linkage in the hydraulic top cover and maintained irrespective of changes in implement draft. Forces sensed by the top link and applied to the draft control mainspring in the hydraulic top cover therefore have no effect on the hydraulic lift draft control mechanism.

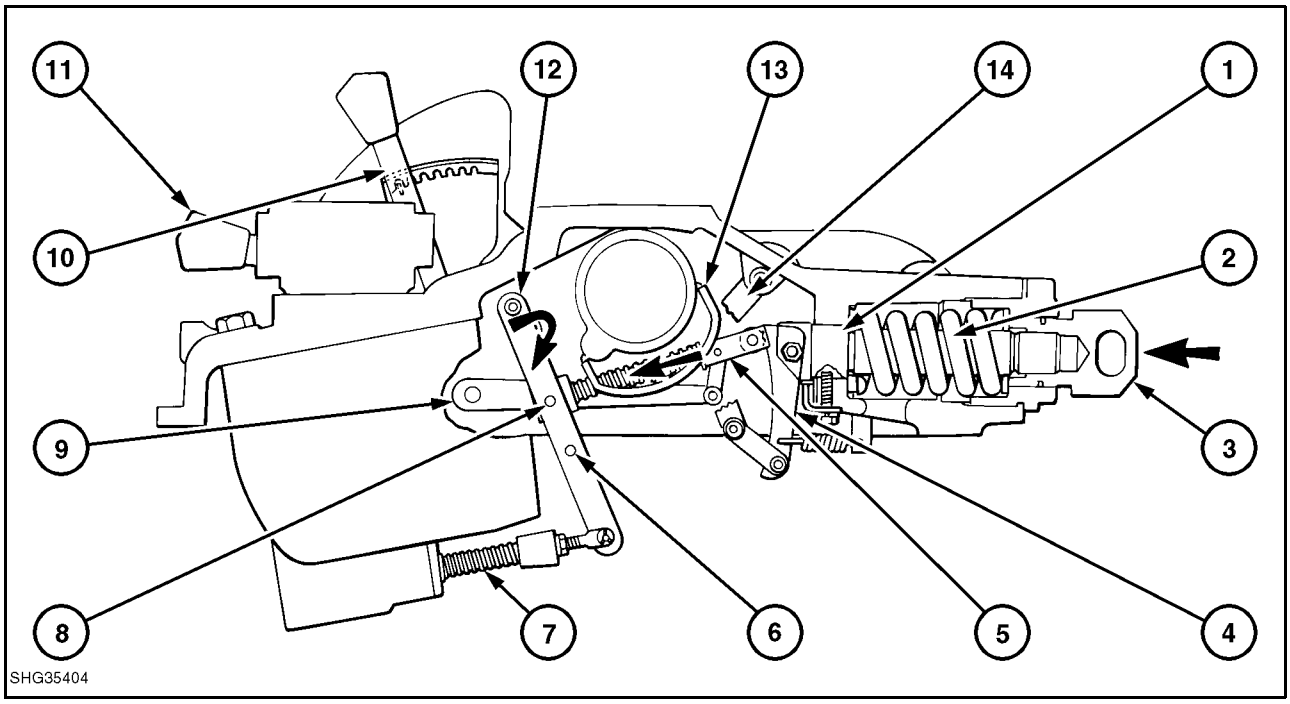

Draft Control Linkage Operation
(For Clarity Position Control Linkage is Not Shown)

168

1. Draft Control Mainspring Plunger
2. Draft Control Mainspring
3. Yoke
4. Selector Link
5. Control Rod and Roller Assembly
6. Stop Pin
7. Control Valve/Spring Assembly
8. Control Rod Connector
9. Selector Arm
10. Selector Lever
11. Control Lever
12. Actuating Lever
13. Position control Cam
14. Position Control Link

Draft Control Linkage Operation

The hydraulic lift control valve, located within the hydraulic top cover, is connected mechanically to the lift control lever and draft control linkage. This valve directs oil from the pump to the lift cylinder, to effect a raise condition via the unload valve or to the reservoir for a neutral or lowering cycle.

When draft control is selected and the implement draft reaction causes the yoke to move, the reaction is transferred to the lift cylinder control valve via the internal linkage, Figure 168.

As the yoke moves the selector link similarly moves in the same direction. Therefore as the draft load increases the control rod and roller is pushed forward against the actuating lever.

The actuating lever pivots about the control lever shaft and the action of the control rod and roller pushing forward moves the control valve into the raise position. As the implement is raised and the draft loading decreases the yoke moves rearwards allowing the control rod and roller to retract and the control valve to return to the neutral position.

Should the draft loading become less than that set using the selector lever the yoke moves further rearwards and the control rod and roller allows the spring loaded control valve to move toward the lower position. The implement is now lowered further into the ground until the selected draft loading is restored and the control valve again returns to the neutral position.

It can now be seen that this correction cycle maintains the implement draft loading within the range selected with the selector lever.

When the selector lever is moved to intermediate positions between full draft and full position control, a reduced effect on the control valve is achieved whenever the top link subjects the yoke to the draft forces.

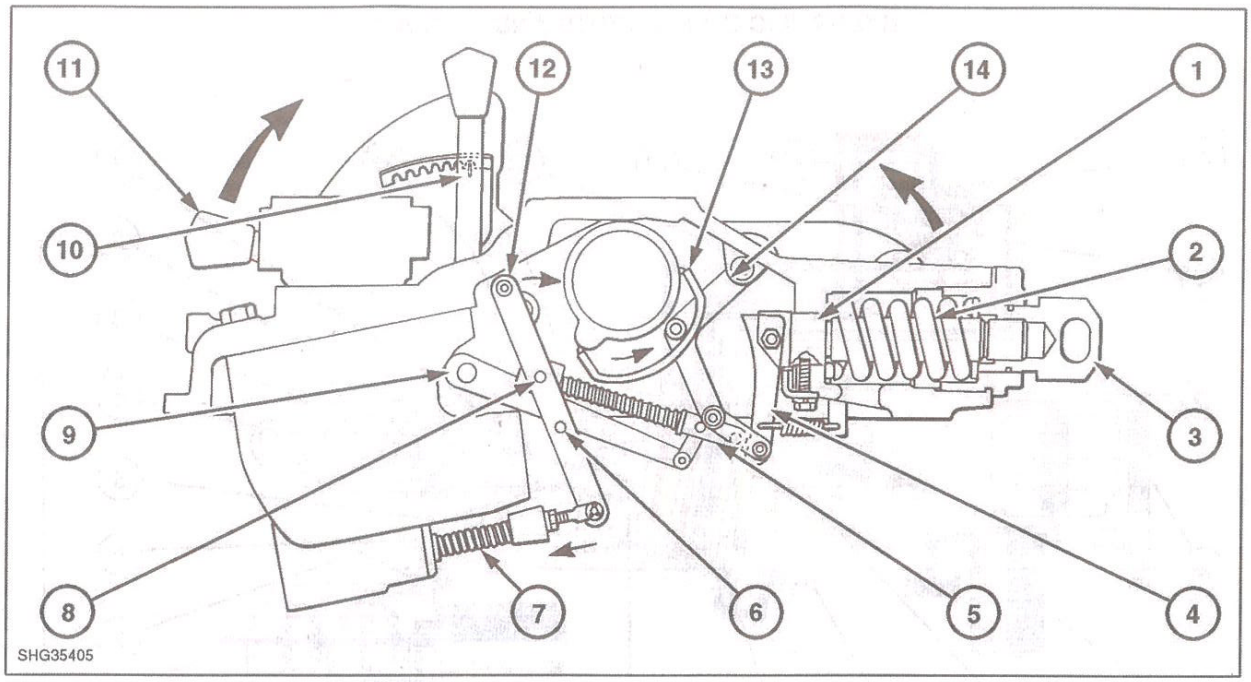

Position Control Linkage Operation
(For Clarity Draft Control Linkage is Not Shown)

169

1. Draft Control Mainspring Plunger
2. Draft Control Mainspring
3. Yoke
4. Selector Link
5. Control Rod and Roller Assembly
6. Stop Pin
7. Control Valve/Spring Assembly
8. Control Rod Connector
9. Selector Arm
10. Selector Lever
11. Control Lever
12. Actuating Lever
13. Position control Cam
14. Position Control Link Roller

The intermediate positions on the selector lever have therefore been introduced to permit the operator to adjust the controls in order to select the system response and control characteristics best suited to the operation being performed.

Position Control Linkage Operation

The system of Position Control enables the working depth or height of an implement, relative to the tractor, to be pre-set and maintained.

When the system selector lever is located in the highest quadrant position and position control is selected, the control rod and roller assembly is positioned with the roller aligned with the lower end of the selector link, Figure 169.

When the rod and roller assembly is in this position any variations in draft loading applied to the yoke through the top link of the three point linkage will not alter the position of the control rod and roller assembly. Consequently the position of the actuating lever and control valve remain unchanged unless the position of the hydraulic lift control lever is moved.

When the lift control lever is moved the actuating lever pivots on the control rod and moves the control valve to the raise or lower position as required.

As the lift arms move, the position control link roller rides the position control cam and moves the control rod and hence the actuating lever. When the lift arms have reached the desired position the actuating lever will have returned the control valve to neutral, preventing further movement of the lift arms.

It can now be seen that when position control is selected there is a direct relationship between the height of the lift arms and the position of the lift control lever. The relationship being maintained by the actuating lever, control rod, position control cam and position control link.

HYDRAULIC COMPONENTS AND CIRCUITS

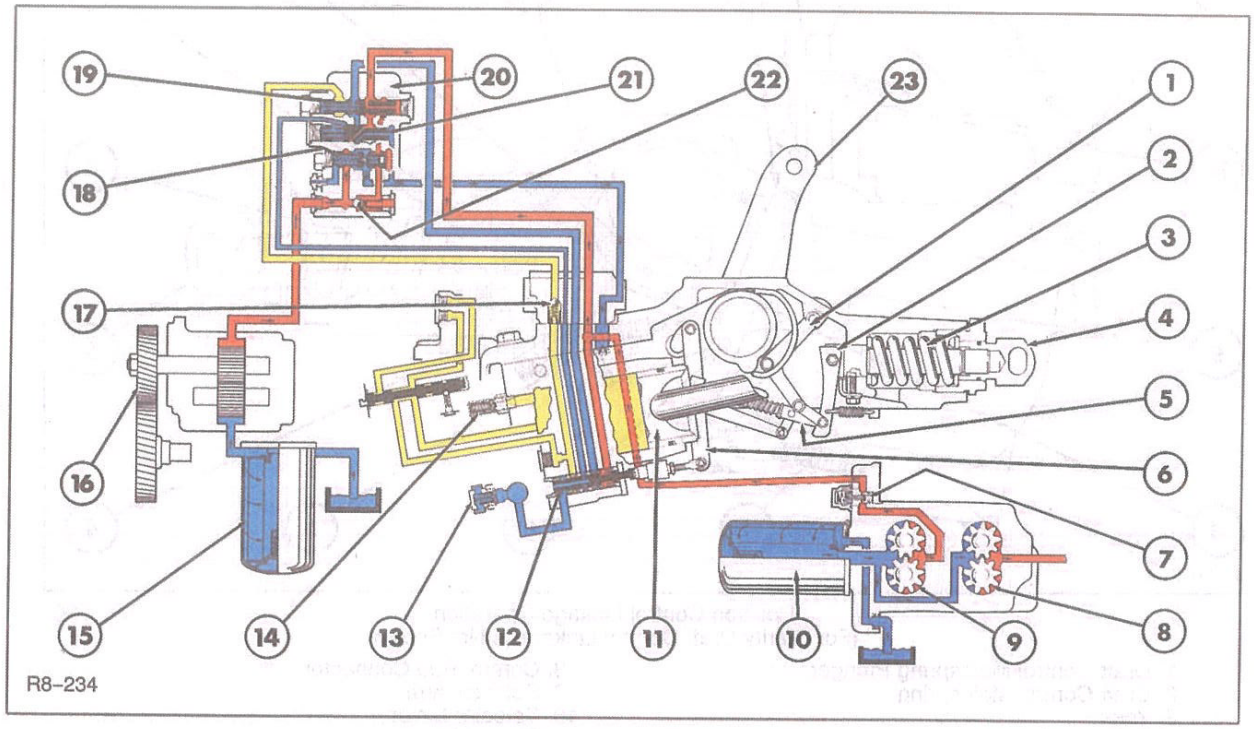

Hydraulic Circuit for Tractor with Fixed Displacement Tandem Gear Type Pump and Top Link Sensing Hydraulic Lift Assembly 170

1. Position Control Link
2. Selector Link
3. Draft Control Mainspring
4. Yoke
5. Selector Rod and Roller Assembly
6. Actuating Link
7. Pressure Relief Valve
8. Steering Pump
9. Transmission Mounted Hydraulic Pump
10. Pump Intake Filter
11. Lift Piston
12. Control Valve
13. Exhaust Valve
14. Lift Cylinder Safety Valve
15. Auxiliary Pump Intake Filter
16. Engine Mounted Auxiliary Hydraulic Pump
17. Check Valve
18. Combining (Sequencing) Valve
19. Flow Control Valve
20. Priority Valve Pack
21. Unload Valve
22. Check Valve
23. Lift Arms

Pump Pressure Oil

Trapped Oil

Suction/Return to Reservoir Oil

Figure 170 shows the hydraulic circuit and components for the top link sensing hydraulic system when the tractor is fitted with a fixed displacement hydraulic pump.

When the tractor is fitted with the variable displacement CCLS hydraulic pump the hydraulic circuit is as shown in Figure 5.

The reasons for the principal differences in the circuits are as follows:–

Tractors fitted with top link sensing may be installed with either the variable displacement closed centre load sensing hydraulic pump or the fixed displacement gear type pump.

The fixed displacement pump is more commonly installed and must be supplemented by an auxiliary engine mounted pump if two or more remote valves are also fitted.

An auxiliary engine mounted pump is **never** installed on tractors with the variable displacement CCLS pump, which is capable of providing sufficient flow to the hydraulic system and up to four remote valves.

PRIORITY VALVE PACK

Where the tractor is fitted with the fixed displacement hydraulic pump, a priority valve pack is required, Figure 171. This pack, located on top of the hydraulic lift cover, contains a set of valves which establish pump priority and controls the flow of oil to the lift cylinder, auxiliary equipment and remote valves.

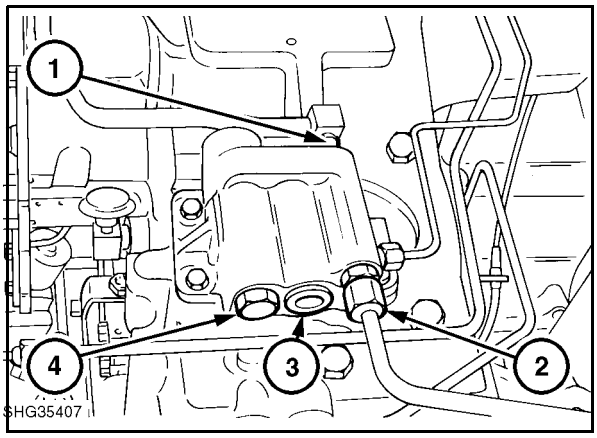

171

The individual function of each of these valves are as follows:

Flow Control Valve – (4) Figure 171

This valve, located in the priority valve pack, controls the flow of oil to the hydraulic lift cylinder by sensing the pressure drop through the hydraulic lift control valve. The flow control valve ensures that hydraulic oil supply priority is given to the tractor hydraulic lift demand and diverts the surplus oil to the combining valve.

Unload Valve – (3) Figure 171

The unload valve is operated by oil pressure as directed by the control valve and has two positions. In the raise position the valve allows pumped oil to flow to the lift cylinder whilst in the neutral or lowering position the oil passes to the reservoir.

Combining Valve – (2) Figure 171

This valve, which is only installed when remote valves are fitted, regulates the flow of oil in the remote valve circuit and combines the flow of oil from the main and auxiliary engine mounted pumps.

The function of the combining valve is to:

- Return main hydraulic pump and auxiliary pump flows to sump when there is no remote valve demand.
- Direct pump flows to remote valves on demand.
- Direct a proportion of the pump flow to remote valves and return surplus oil to the rear axle if the pump output exceeds remote valve circuit demand.
- Protect remote valve and auxiliary pump circuits from excess pressure.

Check Valve – (1) Figure 171

Two check valves are incorporated in the priority valve pack as follows.

The first one way check valve in the auxiliary pump supply port of the priority valve pack prevents any back feed from the main hydraulic pump to the auxiliary engine mounted pump.

The second check valve in the base of the priority valve pack prevents oil flow from the lift cylinder to the flow control valve during the lift cylinder lowering, neutral or shock load conditions.

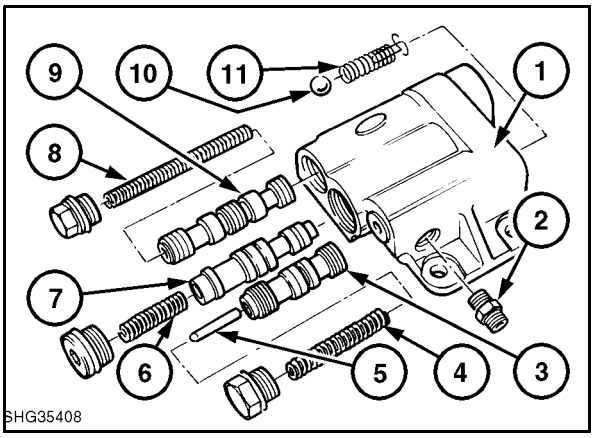

172

Priority Valve Pack Assembly

1. Auxiliary Pump Check Valve
2. Restrictor
3. Combining Valve
4. Unload Valve
5. Flow Control
6. Lift Cylinder Check Valve

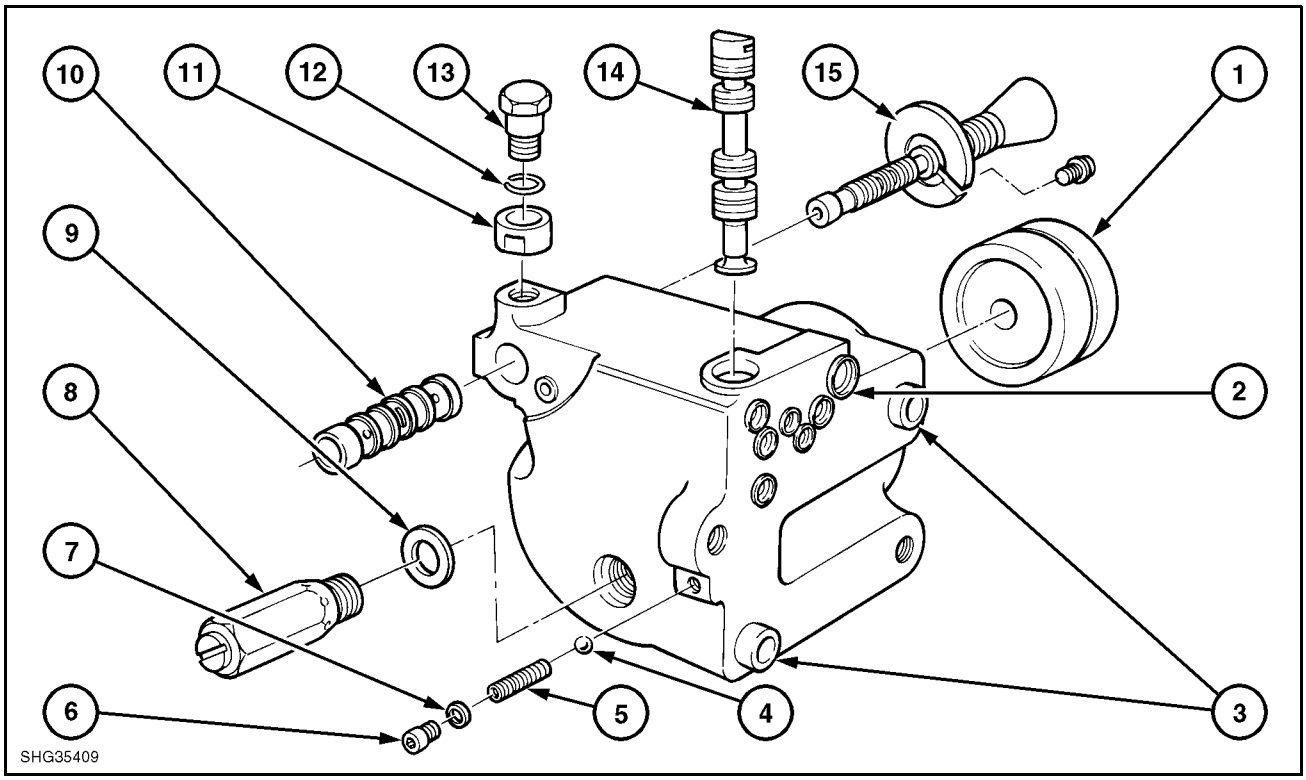

Hydraulic Lift Cylinder Exploded View

173

1. Lift Piston
2. 'O' Ring Seal
3. Locating Dowels
4. Ball
5. Spring
6. 'O' Ring Seal
7. Detent Cap
8. Cylinder Safety Valve
9. Dowty Washer
10. Control Valve Bush
11. Deflector
12. 'O' Ring Seal
13. Exhaust Valve
14. ASC Valve
15. Lift Control Valve

DESCRIPTION AND LOCATION	IDENTIFICATION	FUNCTION
PRESSURE RELIEF VALVE HPL Pump	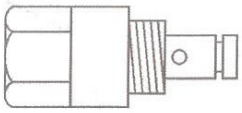	Limits maximum pressure in HPL system to prevent pump overload
CONTROL VALVE AND BUSH	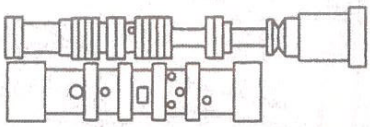	provides 4 control positions – Neutral, Lowering, Slow and Fast Raising
CHECK VALVE Priority Valve	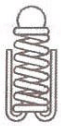	Controls oil flow into lift cylinder, operates with control valve 5–6 bar (70–85 lbf/in^2)
EXHAUST VALVE Lift Cylinder	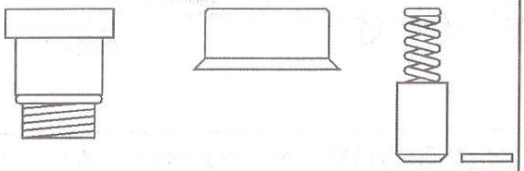	Maintains constant controlled lowering
RAM CYLINDER SAFETY VALVE Lift Cylinder	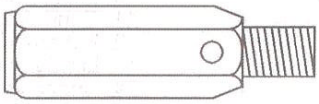	Protects lift cylinder from overload with system in neutral 196–203 bar (2850–2950 lbf/in^2)
AUXILIARY SERVICES CONTROL VALVE Lift Cylinder	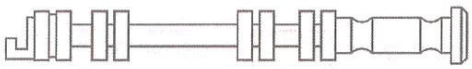	2 Position valve Inner Position – Outer Position
UNLOAD VALVE Priority Valve Pack	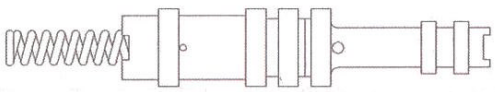	Operated by oil pressure from control valve 4.2–21 bar (60–300 lbf/in^2) Spring length 4.8cm (1.9 in)
FLOW CONTROL VALVE Priority Pack	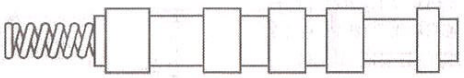	Multi–functional valve operating in all HPL cycles. Spring length 7.3cm (2.9 in)
COMBINING VALVE AUX PUMP LOAD CHECK VALVE Priority Valve Pack	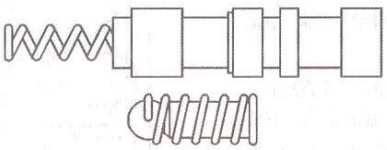	Check valve operates with combining valve. Spring length 5.5 cm (2.2in)

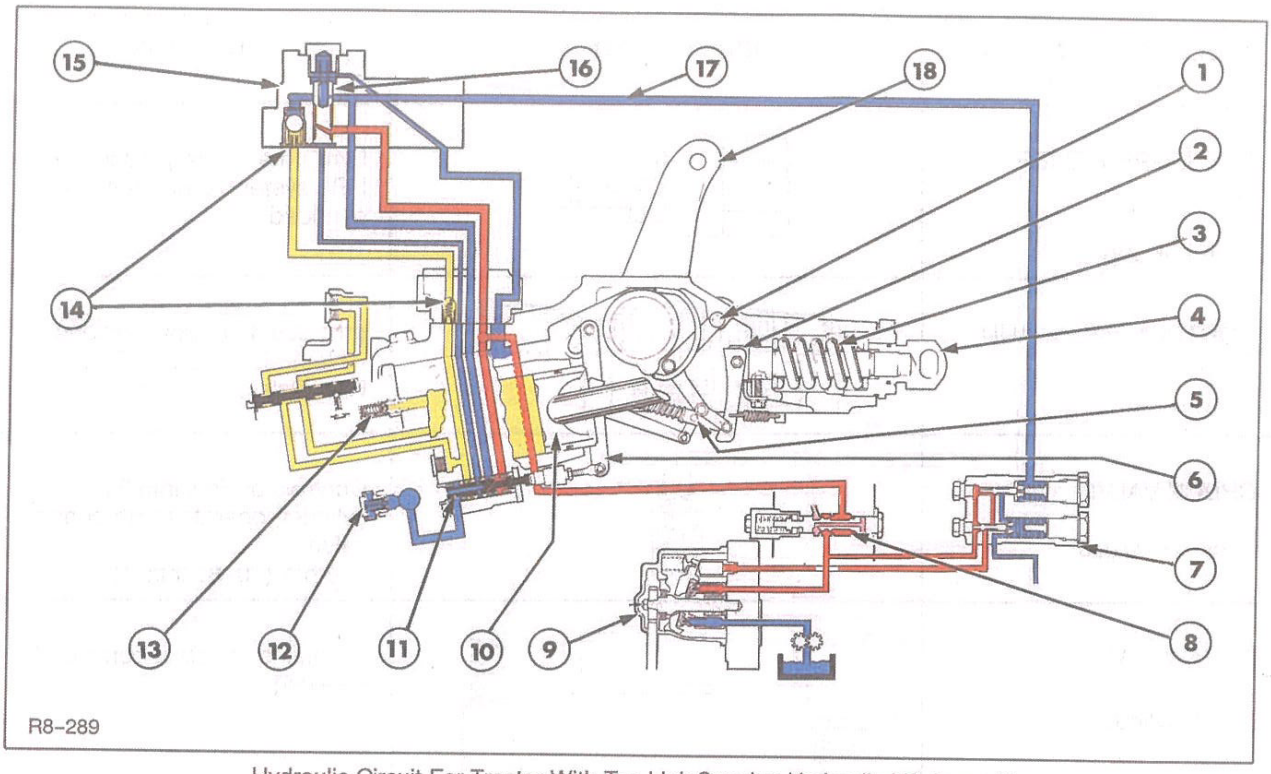

Hydraulic Circuit For Tractor With Top Link Sensing Hydraulic Lift Assembly and Variable Displacement CCLS Hydraulic Pump 174

1. Position Control Link
2. Selector Link
3. Draft Control Mainspring
4. Yoke
5. Selector Rod and Roller Assembly
6. Actuating Link
7. Pressure and Flow Compensating Valve
8. Pressure Regulating Valve
9. Variable Displacement CCLS Hydraulic Pump
10. Lift Piston
11. Control Valve
12. Exhaust Valve
13. Lift Cylinder Safety Valve
14. Check Valve
15. Unload Valve Assembly
16. Unload Valve Spool
17. Load Sensing Line To Hydraulic Pump
18. Lift Arms

Pump Pressure Oil

Trapped Oil

Suction/Return to Reservoir Oil

Tractors installed with the variable displacement CCLS hydraulic pump do not require the priority valve pack but use a special unload valve instead, Figure 175. The function of this single valve is to control the flow of oil to the lift cylinder and ensure a smooth initial lift.

The unload valve is also linked to the load sensing line of the variable displacement pump and signals the pump to increase or decrease output according to hydraulic demand. Refer to Figure 180 for the operation of this valve.

The exhaust valve also shown in both Figure 170 and Figure 174 is spring operated and located in the hydraulic lift cylinder. The function of this valve is to control the flow of exhaust oil from the lift cylinder and/or auxiliary equipment thereby controlling the rate of implement drop.

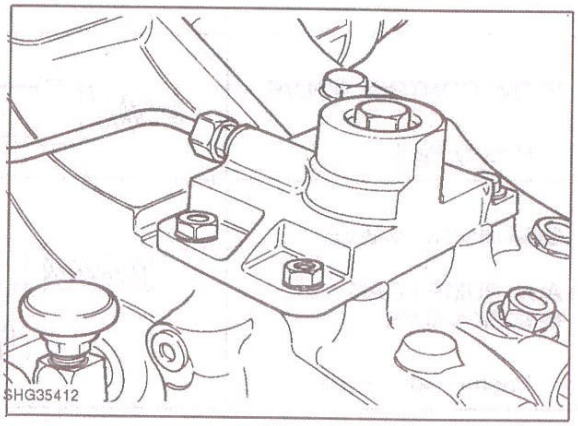

175

HYDRAULIC OIL FLOW
TRACTORS WITH FIXED DISPLACEMENT
HYDRAULIC PUMP

Figure 176 to Figure 179 show the hydraulic system oil flows for neutral, lowering. slow raise and fast raise conditions on tractors equipped with the fixed displacement hydraulic pump.

These illustrations also show operation of the priority valve pack and associated valves, the function of which were described on the previous pages.

OIL FLOW IN NEUTRAL

With reference to Figure 176.

With the control valve in neutral the following functions occur:-

- The oil in the hydraulic lift cylinder is trapped and holds the cylinder in the desired position.
- Pump pressure oil is directed to the combining valve, located in the priority valve pack on the top of the hydraulic lift cover where it is returned to sump or supplied to the deluxe remote valves, if required.

If deluxe remote valves are not fitted the combining valve is deleted, but the same priority valve pack housing is still used.

The oil flow through the hydraulic valves with the control valve in neutral is as follows:-

Pump pressure oil enters the lift cover at gallery E and in neutral the flow control valve prevents oil from entering galleries C and D.

Pump pressure oil flows up gallery E to the flow control valve and unload valve.

The left hand end of the unload valve is open to sump via gallery C and the centre of the control valve.

- Pump pressure applied to the centre face of the unload valve spool now holds the valve to the left.
- With the unload valve held to the left, gallery D and the spring loaded end of the flow control valve are also open to sump through gallery G and the smaller internal drilling in the unload valve.
- Pump pressure oil in gallery E now acts on the right hand face of the flow control valve via an internal drilling, moving the valve fully to the left, allowing pump pressure oil to flow from gallery E to F.
- If the deluxe remote valves are in neutral the load sensing line pressure is vented to sump through the remote valves. Pump oil in gallery F acts on the right hand face of the combining valve, moving the valve to the left allowing oil flow from gallery F to sump gallery G.
- The oil in the lift cylinder remains trapped in galleries A and B by the control valve land and the check valve.

NOTICE

INSERT THE FOLLOWING:

insert 8.5x11 color
section 4
page 4-179 thru 4-188

NOTICE

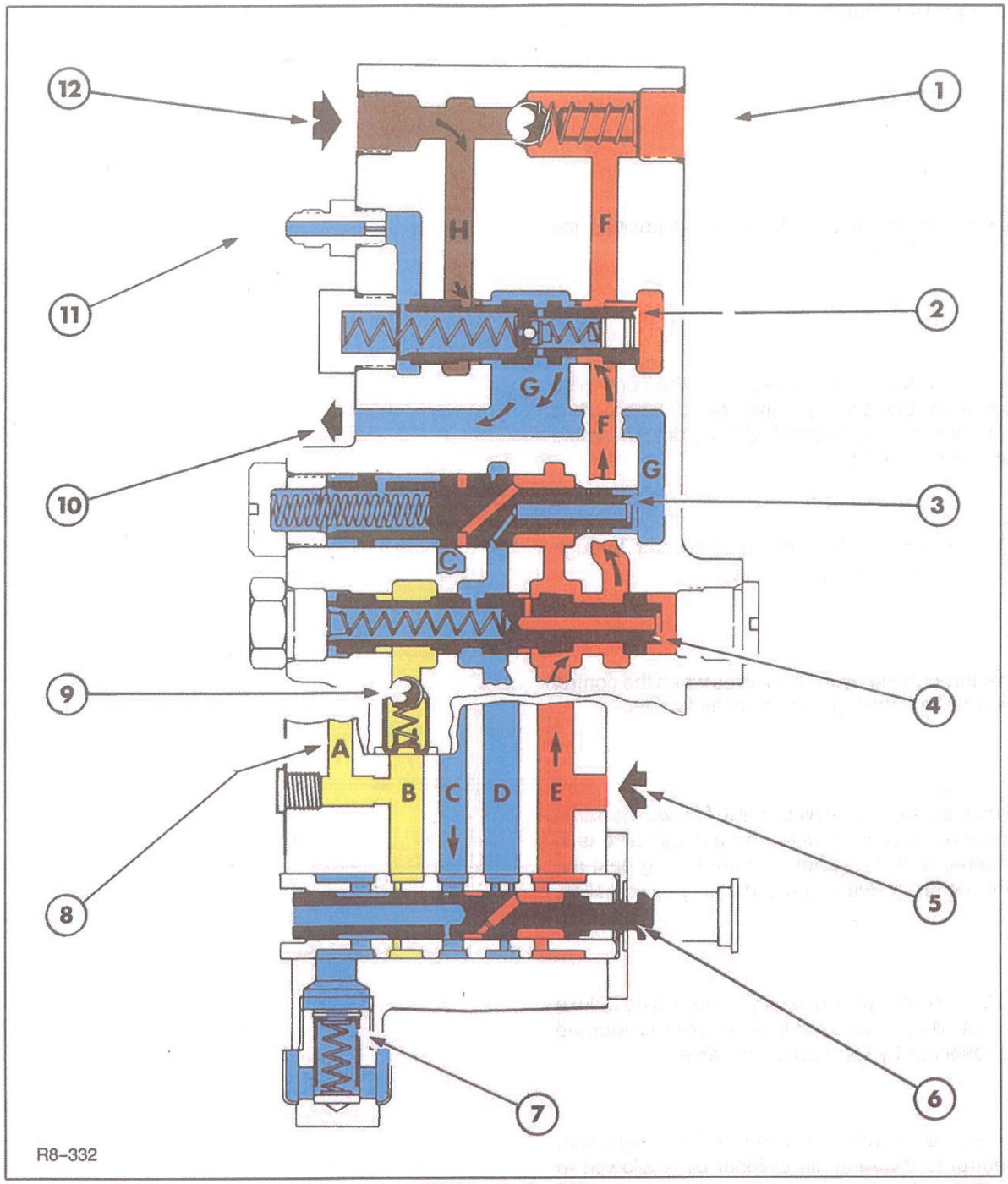

Oil Flow in Neutral
(Tractors with Fixed Displacement Hydraulic Pump)

176

Main Pump Pressure Oil

Auxiliary Pump Oil

Exhaust Oil

Trapped Oil

1. To Remote Valves
2. Combining Valve (Sequencing) Valve
3. Unload Valve
4. Flow Control Valve
5. From Main Pump
6. Control Valve
7. Exhaust Valve
8. To Lift Cylinder
9. Check Valve
10. To Reservoir
11. Remote Valve Pilot Line (Load Sense Line)
12. From Auxiliary Pump

GALLERY A, To Lift Cylinder and Auxiliary Services Valve (where fitted)

GALLERY E, Main Pump Supply

GALLERY H, Auxiliary Pump Supply

GALLERY G, Return to Sump

OIL FLOW IN LOWERING

With reference to Figure 177.

With the control valve in the lowering position the following functions occur:–

- Pump pressure oil is directed to the combining valve in the priority valve pack, where it is returned to sump or supplied to the deluxe remote valves if required.
- Oil in the lift cylinder is released to sump through the control and exhaust valves.

Oil flow through the hydraulic valves when the control valve is in the lowering position is as follows:–

- Pump pressure oil flow to sump follows the same route as described when the control valve is in neutral, entering gallery E and flowing past the flow control valve to the combining valve gallery F.
- In both neutral and lowering, if there is no deluxe remote demand the pump pressure oil is returned to reservoir by the combining valve.
- When the control valve is moved to the right from neutral to lowering, lift cylinder oil is allowed to flow out of gallery A and B, across the control valve to sump through the exhaust valve.
- Excess lift cylinder oil flow through the exhaust valve will force the valve down against the spring, reducing the exhaust port aperture.

This action of reducing the exhaust port aperture consequently controls the lowering of the lift arms irrespective of the loading on the lift linkage.

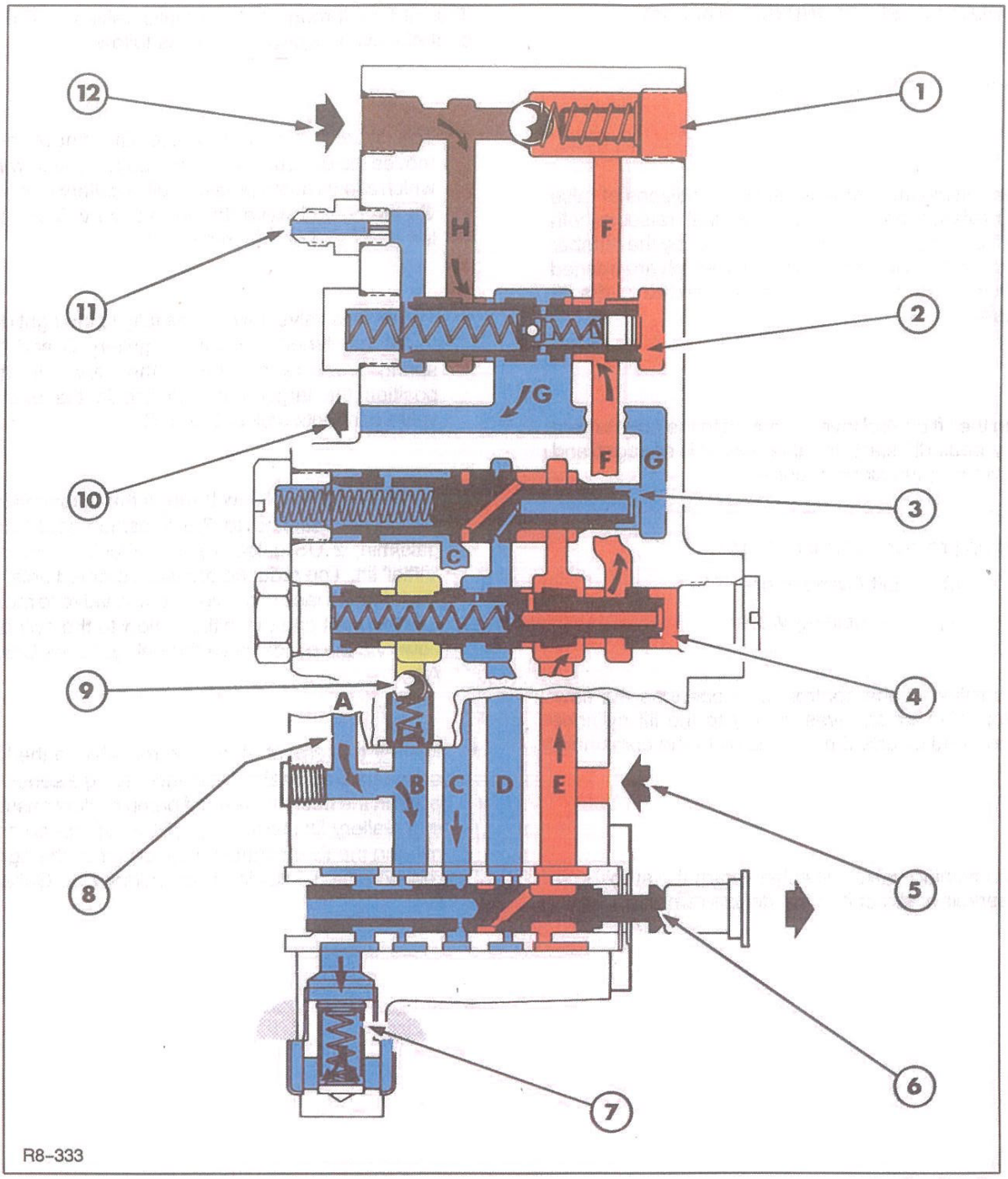

Oil Flow in Lowering
(Tractors with Fixed Displacement Hydraulic Pump)

177

Main Pump Pressure Oil

Auxiliary Pump Oil

Exhaust Oil

Trapped Oil

1. To Remote Valves
2. Combining Valve (Sequencing Valve)
3. Unload Valve
4. Flow Control Valve
5. From Main Pump
6. Control Valve
7. Exhaust Valve
8. To Lift Cylinder
9. Check Valve
10. To Reservoir
11. Remote Valve Pilot Line (Load Sense Line)
12. From Auxiliary Pump

GALLERY A, To Lift Cylinder and Auxiliary Services Valve (where fitted)

GALLERY E, Main Pump Supply

GALLERY H, Auxiliary Pump Supply

GALLERY G, Return to Sump

OIL FLOW IN SLOW (INITIAL) RAISING

With reference to Figure 178.

When raising the hydraulic lift two conditions of raise occur referenced to as 'slow' and 'fast' raise. In both conditions the speed of lift is controlled by the number of ports around the lift control valve which are opened to allow pump pressure oil to be directed to the lift cylinder.

When the lift control lever is moved to the point where the hydraulic lift starts to raise slow lift is engaged and the following functions occur:–

Pump pressure oil is directed to:–

(i) Lift Cylinder, or

(ii) Combining Valve

The position of the control valve operates the flow control valve which gives priority to the lift cylinder demand and diverts the surplus oil to the combining valve.

The combining valve will either return the surplus oil to reservoir or direct it to the deluxe remotes.

The oil flow through the hydraulic valves when the control valve in slow raising is as follows:–

- The initial movement of the lift control lever moves the control valve from neutral to slow raise which allows pump pressure oil in gallery E to flow via the control valve drilling to gallery C and the left hand end of the unload valve.

- The unload valve now moves fully to the right due to the combined pressure in gallery C and the spring pressure applied to the valve. In this position the larger cross drilling in the unload valve connects gallery E and D.

- Pump pressure oil flow through the unload valve drilling is restricted to 7.6 litres/min (1.67 imp gals/min, 2 US gals/min) and effects a smooth 'initial' lift. The reduced pressure created acts on the left hand face of the flow control valve to move it to the right and the initial oil flow to the cylinder flows via the check valve through galleries B and A.

- Further movement of the control valve to the left connects Gallery E to D by uncovering a series of ports in the bush. Increased pump oil flow passes into Gallery D, increasing cylinder lift speed and moving the flow control valve further to the right. reducing the oil flowing from gallery E to Gallery F.

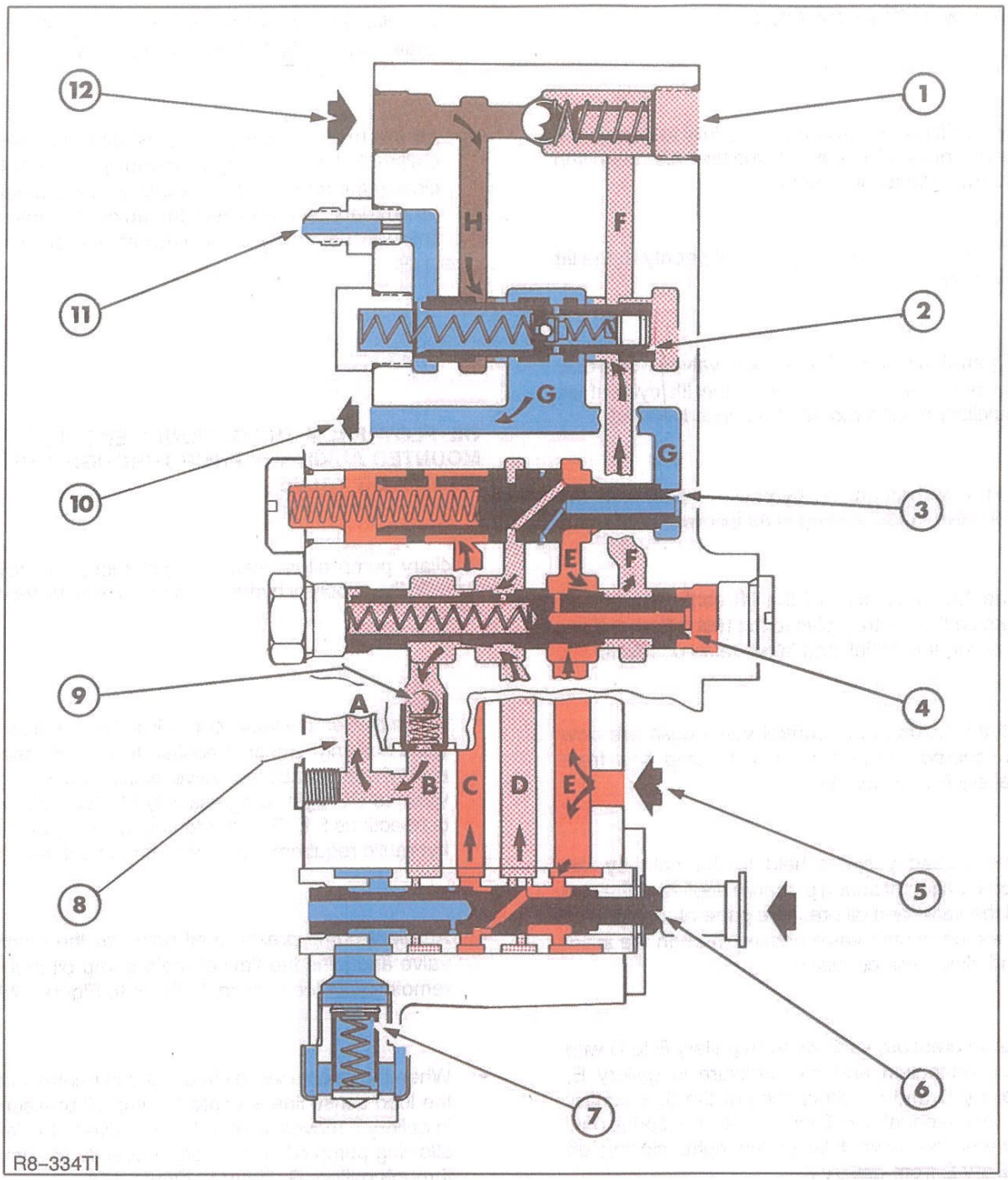

178

Oil Flow in Slow Raising
(Tractors with Fixed Displacement Hydraulic Pump)

Main Pump Pressure Oil

Reduced Pump Pressure Oil

Auxiliary Pump Oil

Exhaust Oil

1. To Remote Valves
2. Combining Valve (Sequencing Valve)
3. Unload Valve
4. Flow Control Valve
5. From Main Pump
6. Control Valve
7. Exhaust Valve
8. To Lift Cylinder
9. Check Valve
10. To Reservoir
11. Remote Valve Pilot Line (Load Sense Line)
12. From Auxiliary Pump

GALLERY A, To Lift Cylinder and Auxiliary Services Valve (where fitted)

GALLERY E, Main Pump Supply

GALLERY H, Auxiliary Pump Supply

GALLERY G, Return to Sump

OIL FLOW IN FAST RAISING

With reference to Figure 179

When the lift control lever is moved fully to the left and the flow control valve moves to the fast raise condition the following functions occur:–

- The flow control valve gives full priority to the lift cylinder.

- Operation of the deluxe remote valves would only be possible, at this point of the lift cycle if an auxiliary engine mounted pump is installed.

The oil flow through the hydraulic valves with the control valve in fast raising is as follows:–

- The full movement of the lift control lever has moved the control valve to the fast raise position, passing the 'initial' and 'slow' raise positions.

- All the holes in the control valve bush are now uncovered allowing increased pump flow from gallery E to gallery D.

- The unload valve is held to the right by the combination of spring pressure applied to the end of the valve and oil pressure generated in gallery C as the control valve passed through the initial and slow raise condition.

- Pump pressure oil flows from gallery E to D with less restriction and the pressure in gallery E, gallery D and on either face of the flow control valve are equal. The flow control valve spring now moves the valve fully to the right, closing off gallery E from gallery F.

- All main pump pressure oil is diverted to the lift cylinder, giving lift cylinder priority over remote valves. Oil entering the cylinder flows past the left hand end of the flow control valve, past the check valve in Gallery B and into the lift cylinder Gallery A.

- Due to the size of the ports in the flow control valve bush, the maximum pump flow to the lift cylinder is limited to approximately 6.7 Imp Galls/min (8 US Galls/min 31 ltrs/min).

- As the main hydraulic pump oil does not enter Gallery F, the combining valve moves to the right, closing the return to sump Gallery G. However if an auxiliary pump is fitted, the auxiliary pump oil flow will operate the combining valve as shown in 179.

OIL FLOW FROM THE OPTIONAL ENGINE MOUNTED AUXILIARY PUMP THROUGH THE COMBINING VALVE

Auxiliary pump oil is used to supplement the main pump in the supply of hydraulic oil to the remove valve circuit.

- When the remote valve circuit is actuated, a pilot (load sensing) signal is applied to the left–hand end of the combining valve which moves the valve to the right, progressively blocking off the connections F to G and H to G depending on the hydraulic requirements of the remote valves.

- Auxiliary pump pressure oil now lifts the check valve and joins the flow of main pump oil in the remote valve feed gallery F. Refer to Figure 179.

- When the remote valve circuits are in neutral and the load sense line is vented, pump oil pressure in gallery F moves the combining valve to the left allowing pump oil flow to return directly to sump through gallery G. Refer to Figure 178.

- When the remote valve system is overloaded and pressure in the load sense line exceeds 2700–2750 lbf/in^2 (186–190 bar) the ball type relief valve within the combining valve spool operates venting the pressure applied to the left hand end of the spool to sump via gallery G. The change in pressure across the combining valve moves the spool to the left allowing excess flow from both pumps in galleries F and H to be exhausted to the sump via gallery G.

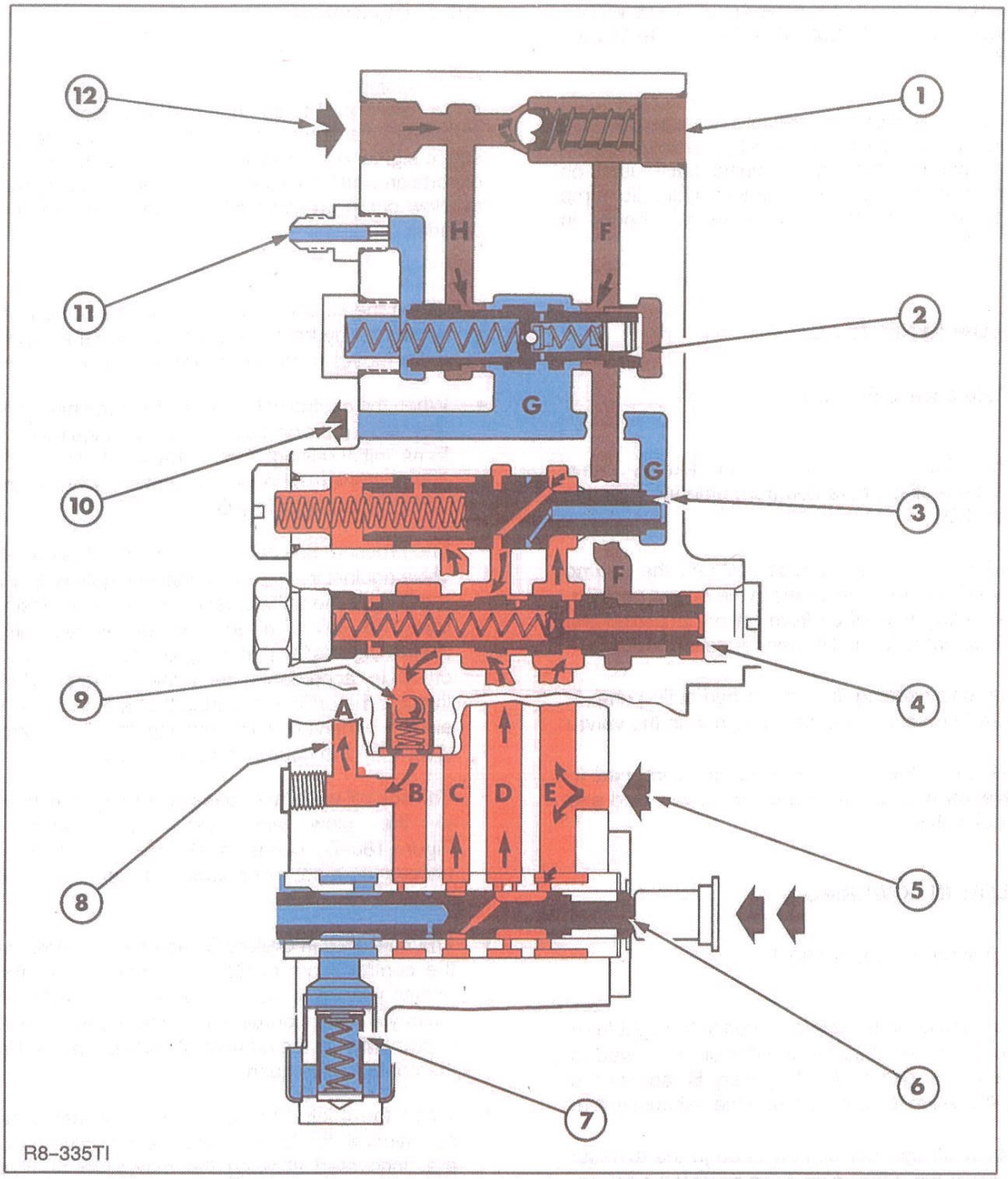

179

Oil Flow in Fast Raising
(Tractors with Fixed Displacement Hydraulic Pump)

Main Pump Pressure Oil

Auxiliary Pump Oil

Exhaust Oil

1. To Remote Valves
2. Combining Valve (Sequencing Valve)
3. Unload Valve
4. Flow Control Valve
5. From Main Pump
6. Control Valve
7. Exhaust Valve
8. To Lift Cylinder
9. Check Valve
10. To Reservoir
11. Remote Valve Pilot Line (Load Sense Line)
12. From Auxiliary Pump

GALLERY A, To Lift Cylinder and Auxiliary Services Valve (where fitted)

GALLERY E, Main Pump Supply

GALLERY H, Auxiliary Pump Supply

GALLERY G, Return to Sump

HYDRAULIC OIL FLOW FOR TRACTORS WITH VARIABLE DISPLACEMENT CCLS HYDRAULIC PUMP

As described earlier when tractors are equipped with the variable displacement CCLS hydraulic pump and top link sensing the priority valve pack used on tractors with the fixed displacement hydraulic pump is replaced with the unload valve shown in Figure 175.

OIL FLOW IN NEUTRAL

With Reference to Figure 180–A

- When the control valve is in neutral, pump pressure oil is prevented from entering galleries C and D.
- Gallery C is open to reservoir and the sprung loaded unload valve is held in the closed position, preventing flow of oil from gallery E across the unload valve to the lift cylinder gallery A.
- The load sensing line to the hydraulic pump is open to reservoir via the dump port in the valve.
- The oil in the lift cylinder remains trapped in galleries A and B by the control valve land and check valve.

OIL FLOW IN LOWERING

With reference to Figure 180–B

- When the control valve is moved to the right from neutral to lowering, lift cylinder oil is allowed to flow out of gallery A into gallery B, across the control valve to sump through the exhaust valve.
- Excess lift cylinder oil flow through the exhaust valve will force the valve down against the spring, reducing the exhaust port aperture.
- This action of reducing the exhaust port aperture consequently controls the lowering of the lift arms irrespective of the loading on the lift linkage.

OIL FLOW IN RAISING

When raising the hydraulic lift two conditions of raise occur referenced to as slow and fast raise. In both conditions the speed of lift is controlled by the load sense signal to the hydraulic pump and the number of ports around the lift control valve which are opened to allow pump pressure oil to be directed to the lift cylinder.

- When the lift control lever is moved to the point where the hydraulic lift starts to raise the control valve moves from the neutral to slow lift position.
- When the control valve moves from the neutral to slow raise position it also passes a stage referred to as 'initial raising', Figure 180–C. At this point, pump pressure oil in gallery E flows via the control valve drilling to gallery C.
- The pressure rise in Gallery C moves the unload valve against its spring, connecting gallery E, via a drilling in the unload valve, to the load sensing line. The flow of oil through the unload valve drilling, signals the pump to produce an initial flow of oil in accordance with the pressure drop through the drilling, ensuring that a smooth lift is always achieved when moving the lift control lever from the neutral to raise condition.
- The control valve after passing through the initial to the slow and fast raise condition, Figure 180–D, connects Gallery E and D by uncovering a series of ports in the control valve bush.
- The flow of oil in Gallery E can now also flow via the control valve to Gallery D and across the unload valve and check valve to the lift cylinder Gallery A. The hydraulic lift now raises at a speed in proportion to the number of ports uncovered in the control valve bush.
- When the control valve reaches the fast raise condition all the holes in the control valve bush are uncovered allowing the maximum oil flow from gallery E to Gallery D.
- The pressure in gallery D is sensed by the load sense line, which signals the variable displacement CCLS pump to maintain output according to demand.

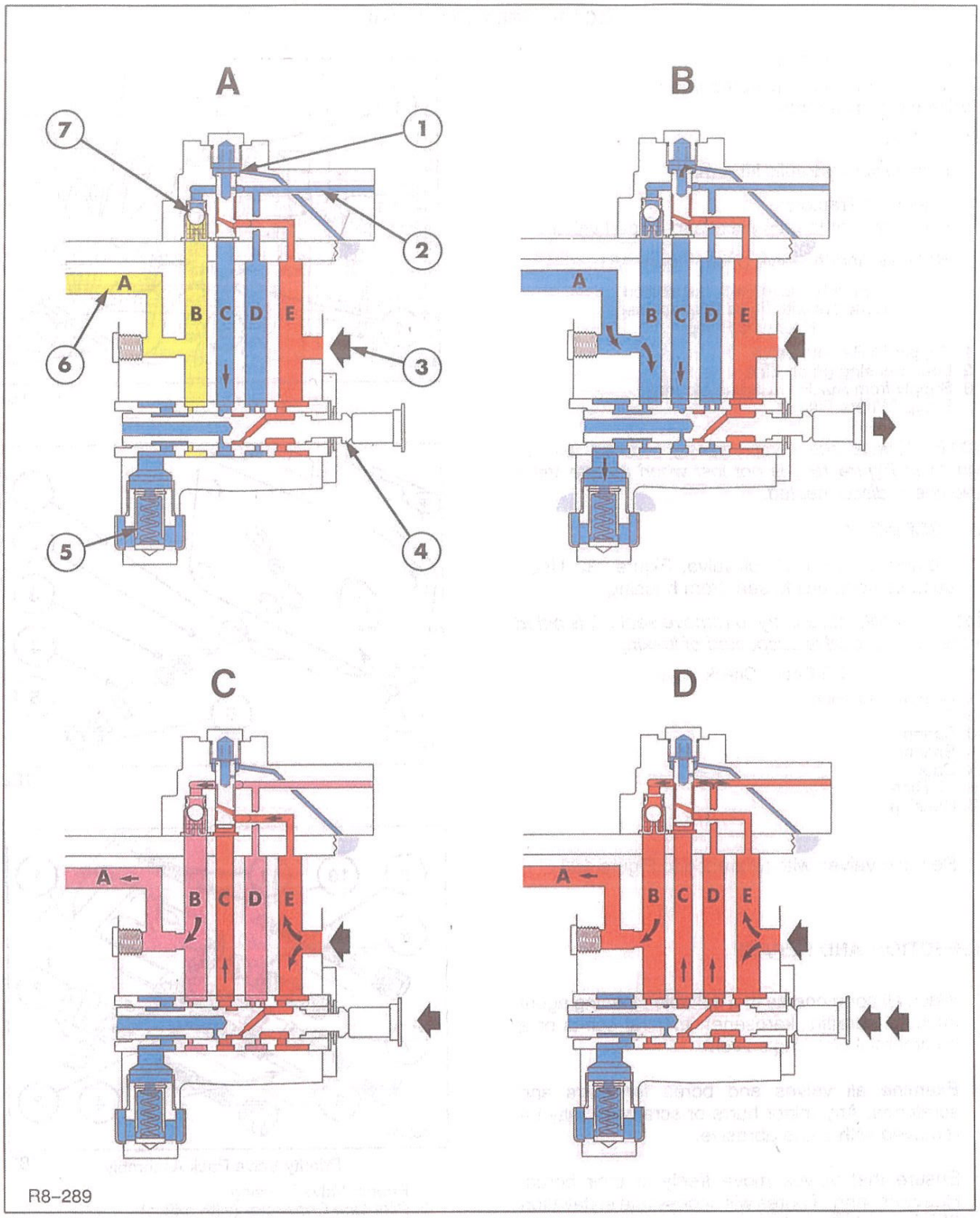

Hydraulic Oil Flow For Tractors With Variable Displacement CCLS Hydraulic Pump 180

Pump Pressure Oil

Reduced Pump Pressure Oil

Exhaust Oil

Trapped Oil

A Neutral
B Lowering
C Initial Raising
D Fast Raising

1. Unload Valve Spool
2. Load Sensing Line to Hydraulic Pump
3. From Hydraulic Pump
4. Control Valve
5. Exhaust Valve
6. To Lift Cylinder
7. Check Valve

COMPONENT OVERHAUL

PRIORITY VALVE PACK (Tractors With Fixed Displacement Hydraulic Pump Only)

REMOVAL

1. Fully lower hydraulic lift arms.
2. Less Cab Tractors:
   Remove seat to gain access to unload valve.
3. Remove priority valve pack, Figure 181.

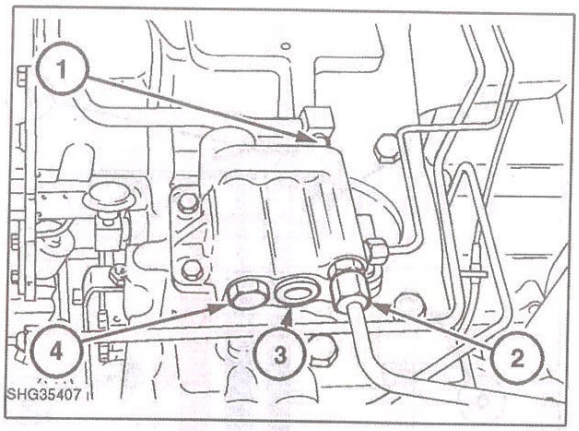

181

Priority Valve Pack Installation (Tractors with Fixed Displacement Hydraulic Pump)

1. Supply To Remote Valve
2. Load Sensing (Pilot) Line
3. Supply from Auxiliary Engine Mounted Pump (Where Fitted)

NOTE: *Ensure check valve spring and ball, item 10 and 11 in Figure 183, is not lost when remote valve feed line is disconnected.*

DISASSEMBLY

1. Remove lift circuit check valve, Figure 182. Use a suitable hook pull to seat from housing.

Note: *It is only necessary to remove seat if it is pitted or the 'O' ring seal is suspected of leaking*

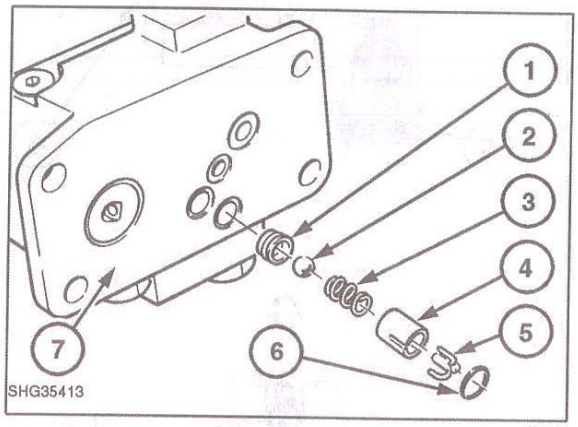

182

Lift Circuit Check Valve

1. Seat and 'O' Ring
2. Ball
3. Spring
4. Spacer
5. Cage
6. 'O' Ring
7. Housing

2. Remove valves with reference to Figure 183 .

INSPECTION AND REPAIR

1. Wash all components in a suitable cleaning agent such as paraffin (kerosene), mineral spirits or a commercial cleaning solvent.
2. Examine all valves and bores for burrs and scratches. Any minor burrs or scratches may be removed with a fine abrasive.
3. Ensure that valves move freely in their bores. Heavy scoring of bores will necessitate installation of a new priority valve pack.
4. Renew all 'O' ring seals.
5. Lubricate all valves with hydraulic oil prior to re-assembly.

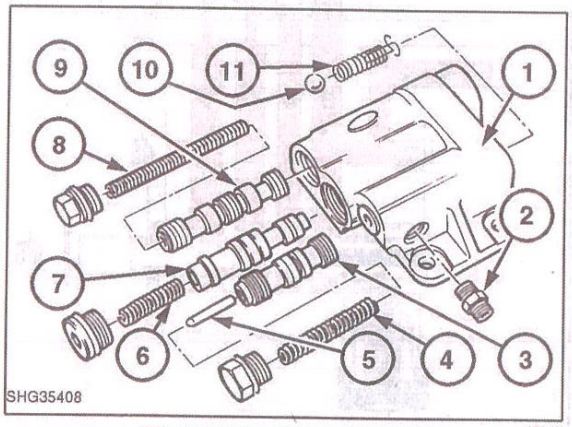

Priority Valve Pack Assembly 183

1. Priority Valve Housing
2. Pilot Line Connector (with orifice)
3. Combining (Sequencing) Valve
4. Spring
5. Filter
6. Spring
7. Unload Valve
8. Spring
9. Flow Control Valve
10. Check Valve Ball (Auxiliary Pump Circuit)
11. Check Valve Stop and Spring (Auxiliary Pump Circuit)

UNLOAD VALVE
(Tractors With Variable Displacement CCLS Hydraulic Pump only)

REMOVAL

1. Fully lower hydraulic lift arms.
2. Less Cab Tractors:
   Remove seat to gain access to unload valve
3. Remove unload valve assembly, Figure 184.

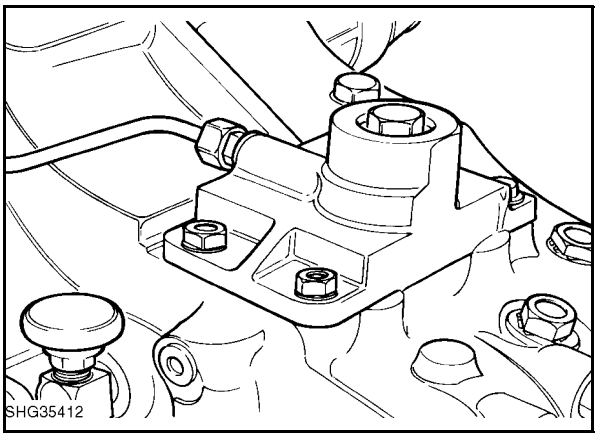

184

DISASSEMBLY

1. Remove unload spool, Figure 185.

Unload Valve

1. Spring
2. Unload Spool
3. Housing
4. Retaining Ring
5. Plug and 'O' Ring

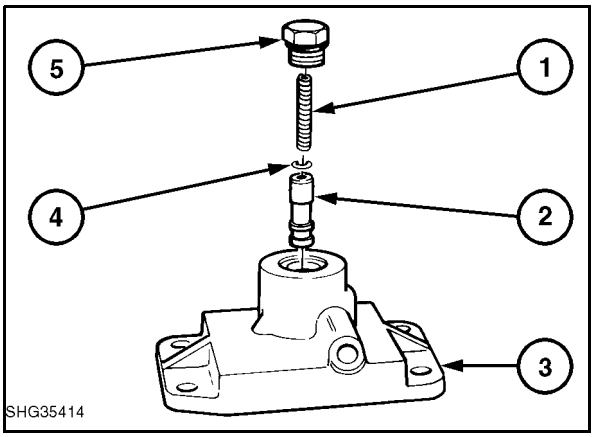

185

2. Disassemble check valve, Figure 186.

Check Valve

1. Seat and 'O' Ring
2. Ball
3. Spring
4. Spacer
5. Cage
6. 'O' Ring
7. Housing

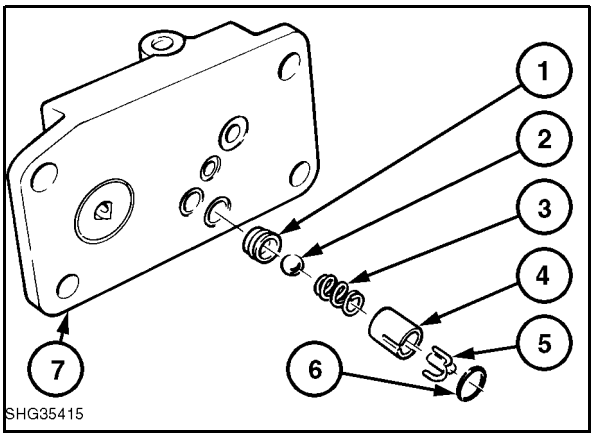

186

INSPECTION AND REPAIR

1. Wash all components in a suitable cleaning agent.
2. Examine the unload valve spool and bore for burrs and scratches. Any minor burrs or scratches may be removed with a fine abrasive.
3. Ensure all parts are thoroughly washed before re-assembly. Any heavy scoring of the bore will necessitate installation of a new unload valve
4. Lubricate valve with hydraulic oil and re-assemble using disassembly procedure in reverse.
5. Renew all 'O' ring seals between the base of valve housing and hydraulic lift cover.

HYDRAULIC LIFT ASSEMBLY - OVERHAUL

REMOVAL

1. Lower lift arms.
2. Move selector lever to position control.
3. Ensure the position control marks on the actuator align with the mark on the hydraulic lift cover support and clamp in position using a $^{5}/_{16}$ in-18-UNC locking bolt, Figure 187.

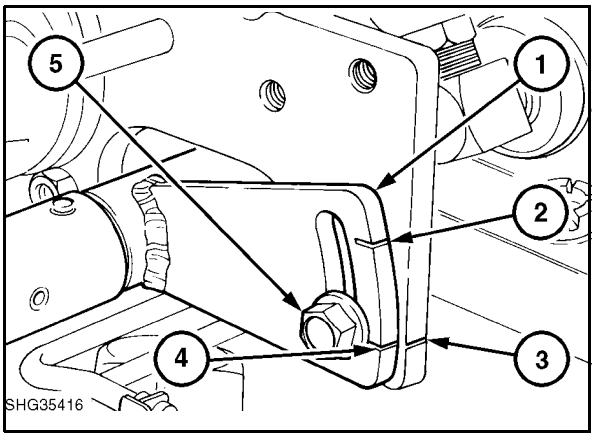

187

Set Up Plate Locked in Position Control

1. Set Up Plate
2. Draft Control Mark on Set Up Plate
3. Position Control Mark on Support
4. Position Control Mark on Set Up Plate
5. Locking Bolt

4. Disconnect the control rods to the lift cover linkage. Refer to Figure 188.

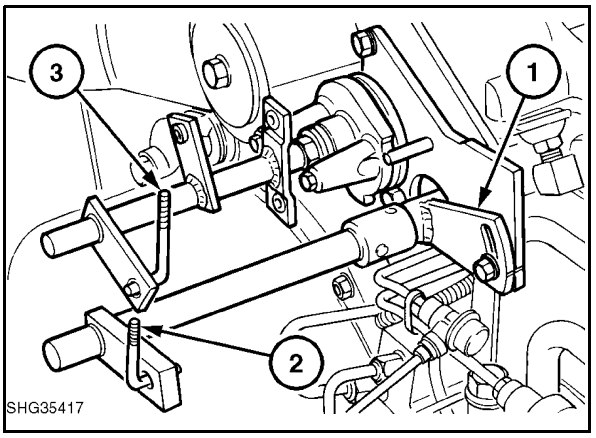

188

Hydraulic Lift Cover Linkage

1. Set-up Plate
2. Position/Draft Control Linkage
3. Lift Control Linkage

5. Disconnect the lever to the ASC valve (where fitted).
6. Remove top link and rocker. Refer to Figure 189.

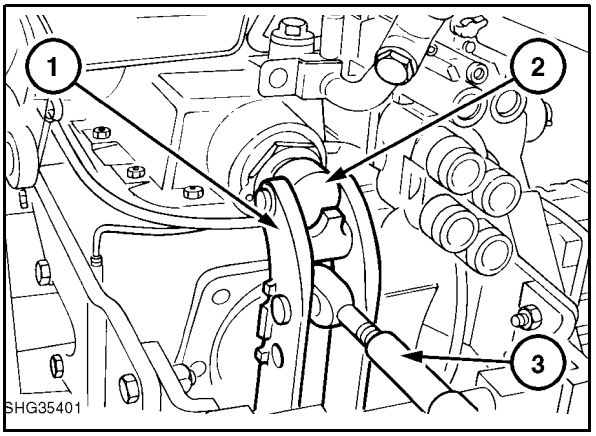

189

Hydraulic Lift Top Link

1. Rocker
2. Yoke
3. Top Link

7. Less Cab Tractors:
   Remove platform to gain access to hydraulic lift cover.

8. Disconnect assist rams hoses (where fitted).
9. Disconnect assist rams and lift rods from hydraulic lift arms.
10. Disconnect and remove remote control valve(s).
11. Remove trailer brake coupler and feed tube (where fitted).
12. Disconnect and remove priority valve pack/unload valve as fitted. Refer to Figure 181 and Figure 184.

NOTE: *On tractors fitted with the priority valve pack be careful that the auxiliary pump supply check valve spring and ball is not ejected when disconnecting the remote valve supply tube.*

13. If the hydraulic lift assembly is being removed in order to overhaul the lift cylinder, it is recommended that the cylinder retaining bolts are **loosened** before removing the lift assembly from the tractor. **Do Not** remove these bolts.
14. Remove the lift cover retaining bolts and using suitable lifting equipment remove hydraulic lift assembly from the tractor, Figure 190.

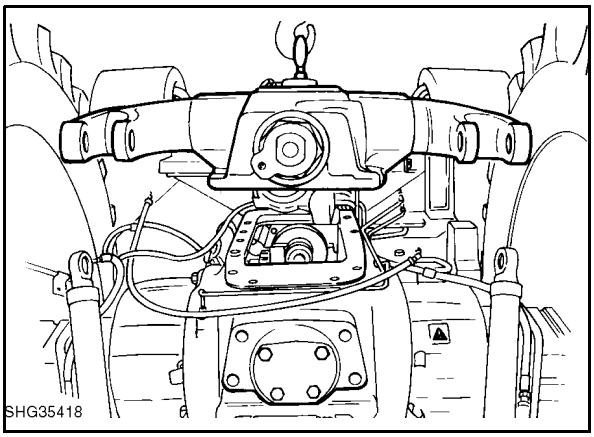

190

DISASSEMBLY

1. Unscrew ASC control linkage connector (3), pull knob (2) from lift cover and remove selector valve stem (1), Figure 191.

NOTE: *ASC valve is fitted to all units, however the knob is only fitted on econoshift less cab (straddle mount)*

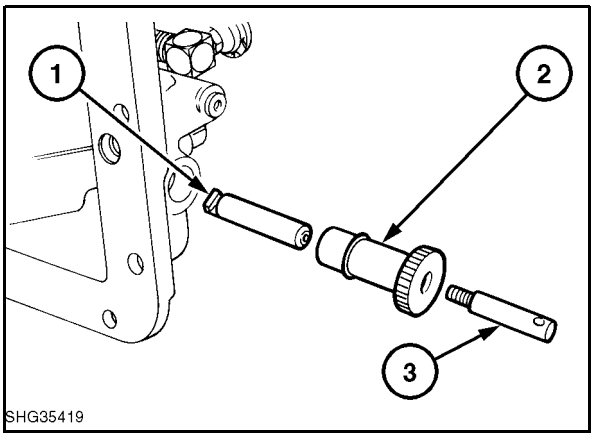

191

ASC Valve Selector Linkage (where fitted)

1. Selector Valve Stem
2. Knob
3. Control Linkage Connector

2. Disconnect and remove control valve turnbuckle, Figure 192.

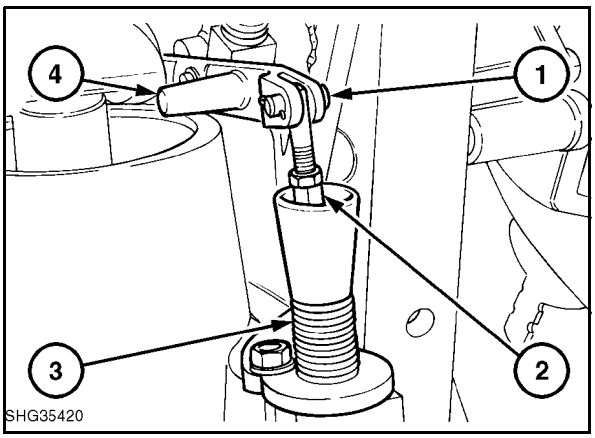

192

Control Valve Turnbuckle

1. Clevis Pin
2. Turnbuckle Assembly
3. Control Valve
4. Lever (Part of Control Rod, Roller and Lever Assembly)

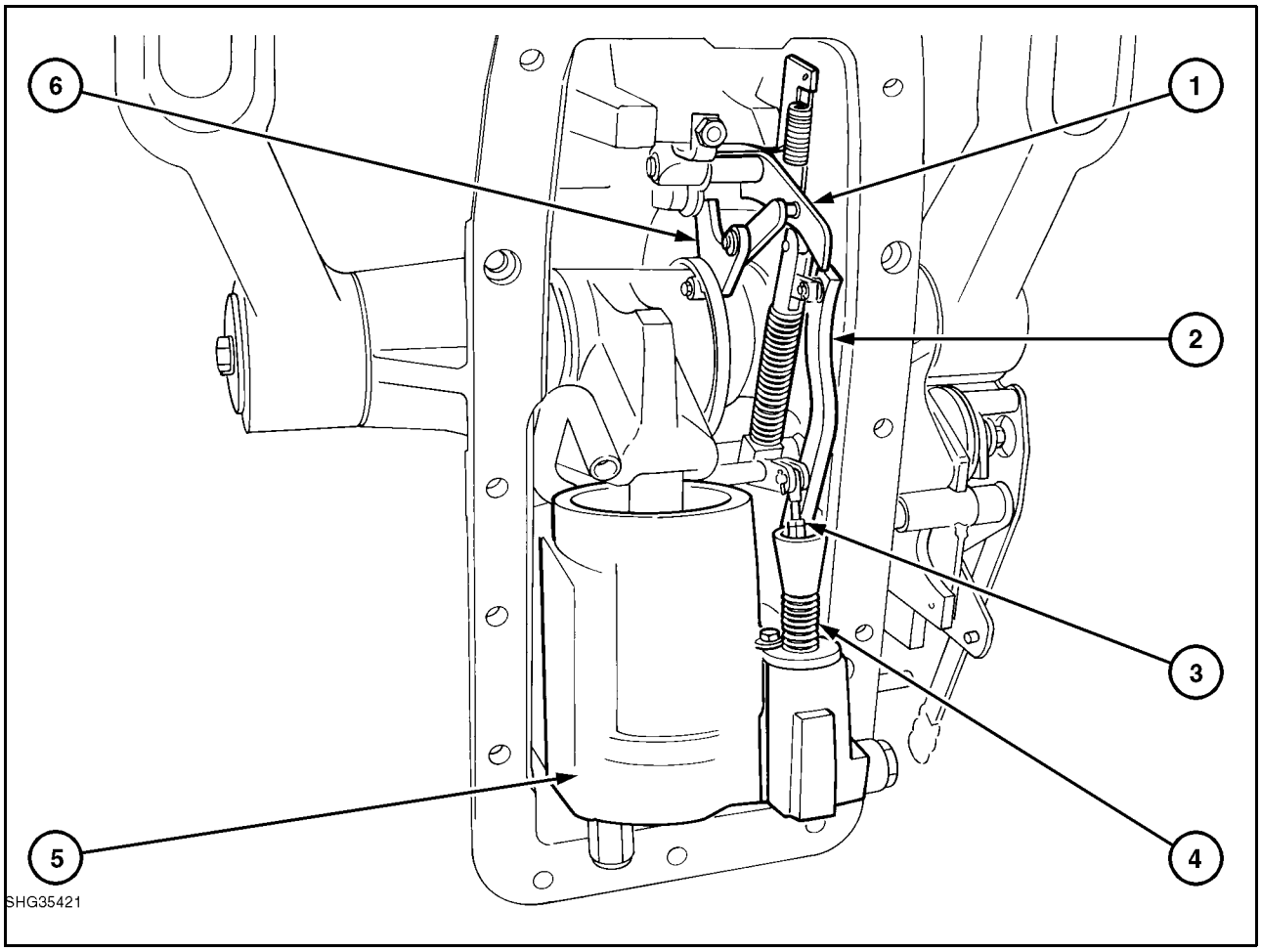

Hydraulic Lift Cover Internal Linkage 193

1. Selector Link
2. Selector Arm
3. Control Valve Turnbuckle
4. Control Valve
5. Lift Cylinder
6. Position Control Link
7. Control Rod and Roller

3. Remove four bolts securing cylinder to lift cover.

4. Move lift arms to raised position and carefully remove cylinder from locating dowels. Refer to Figure 193.

5. Remove priority/unload valve return tube (1), Figure 194.

6. Referencing Figure 193 to Figure 200, disassemble the hydraulic lift assembly.

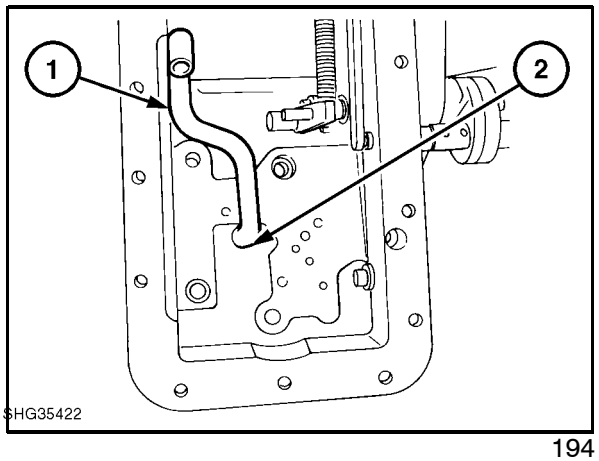

194

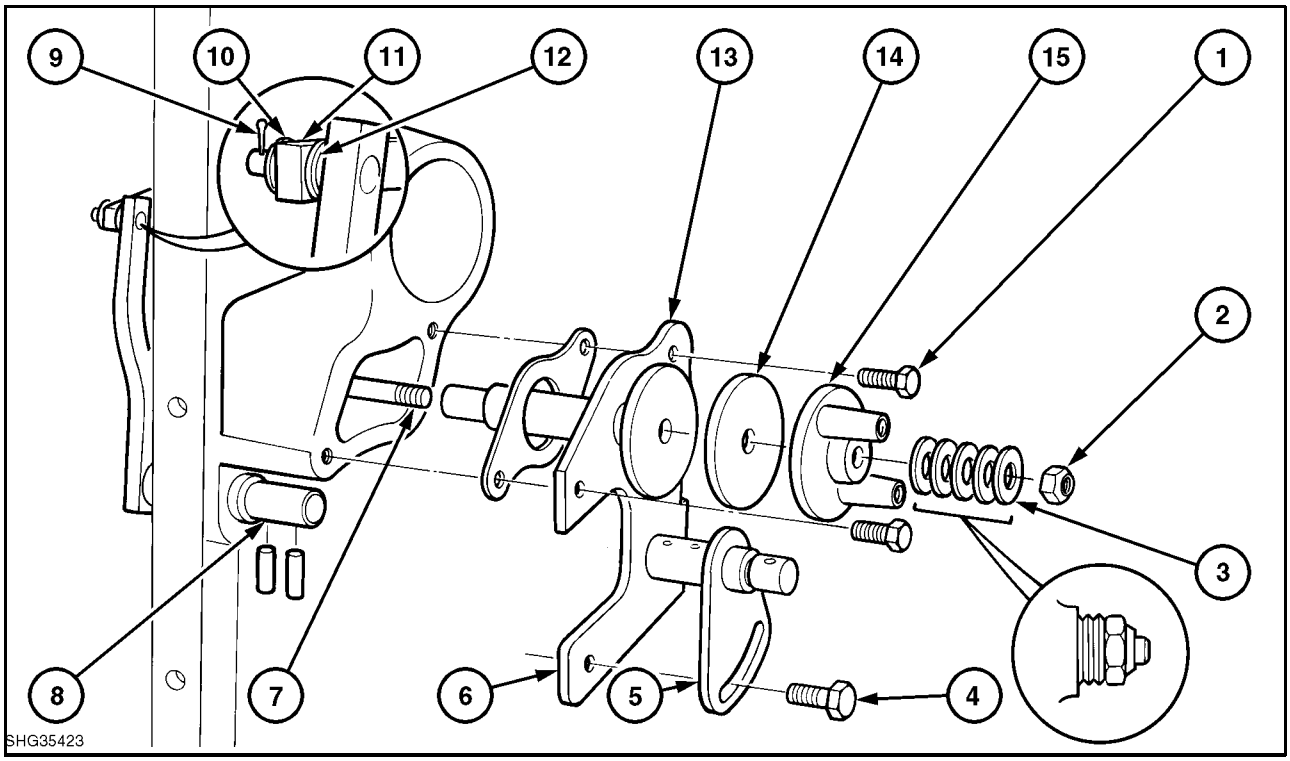

Support Assembly 195

1. Bolt
2. Nut
3. Belleville Washers (5 off)
4. Locking Bolt
5. Position and Draft Control Set-up Plate.
6. Support
7. Control Rod and Roller Shaft
8. Selector Lever
9. Split Pin
10. Washer
11. Control Rod and Roller Link
12. Washers (2 off)
13. Gasket
14. Friction Disc
15. Body

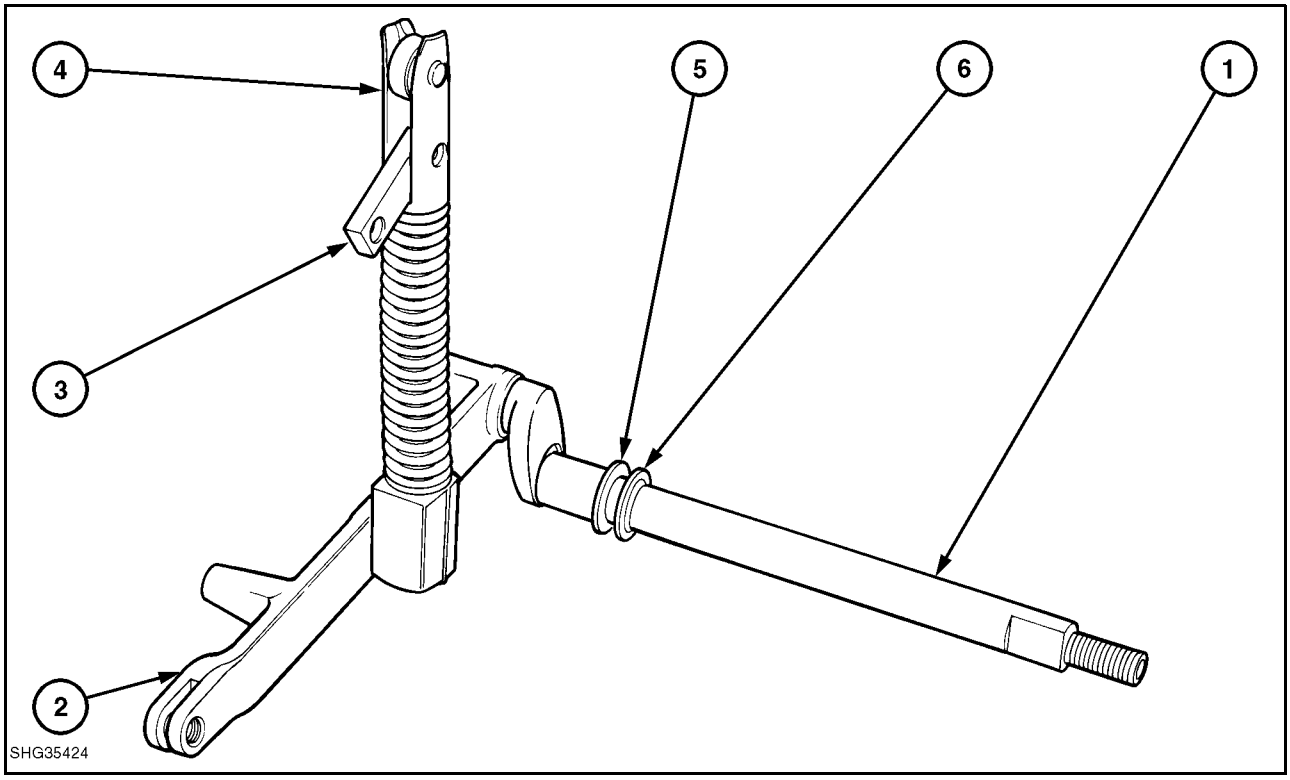

Control Rod, Roller and Lever Assembly 196

1. Shaft
2. Lever
3. Link
4. Rod and Roller Assembly
5. Washer
6. Seal

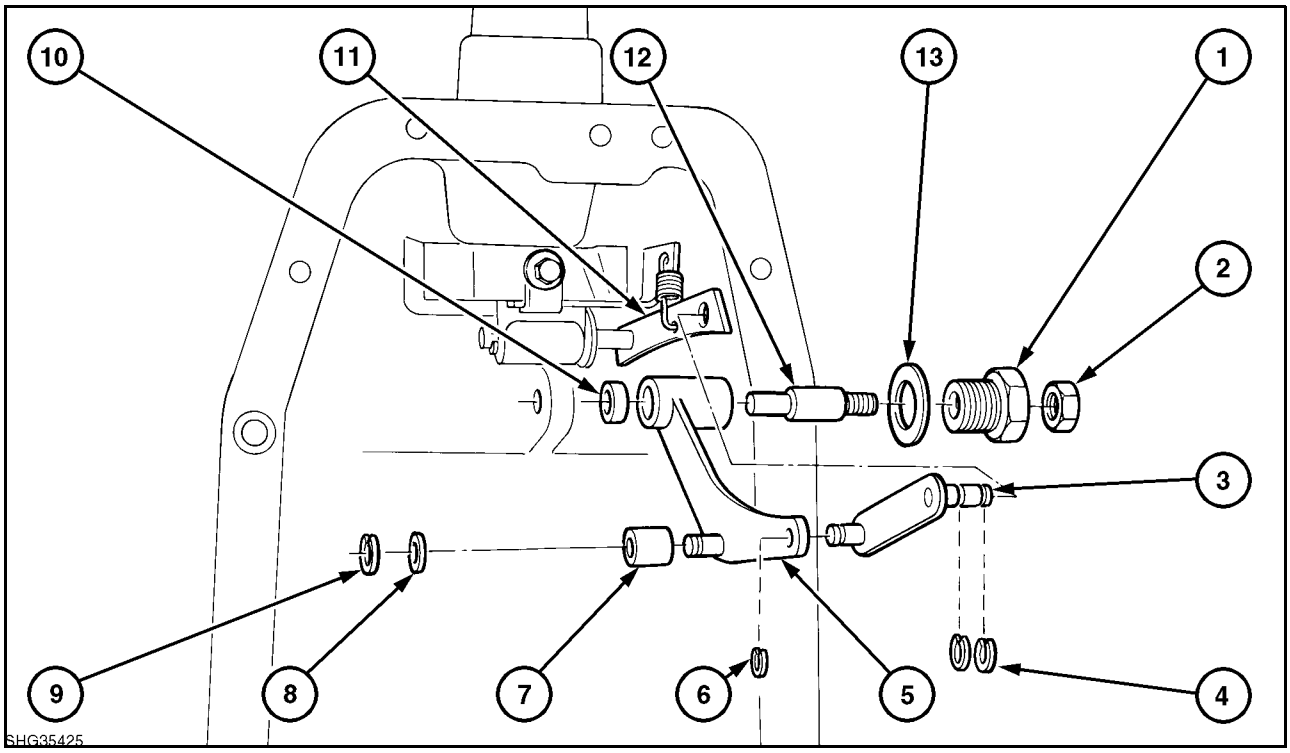

Eccentric Shaft and Selector Link Components 197

1. Sleeve
2. Nut
3. Link
4. Snap rings
5. Link
6. Snap Ring
7. Cam Roller
8. Spacer
9. Snap Ring
10. Spacer
11. Cam
12. Eccentric Shaft
13. Washer

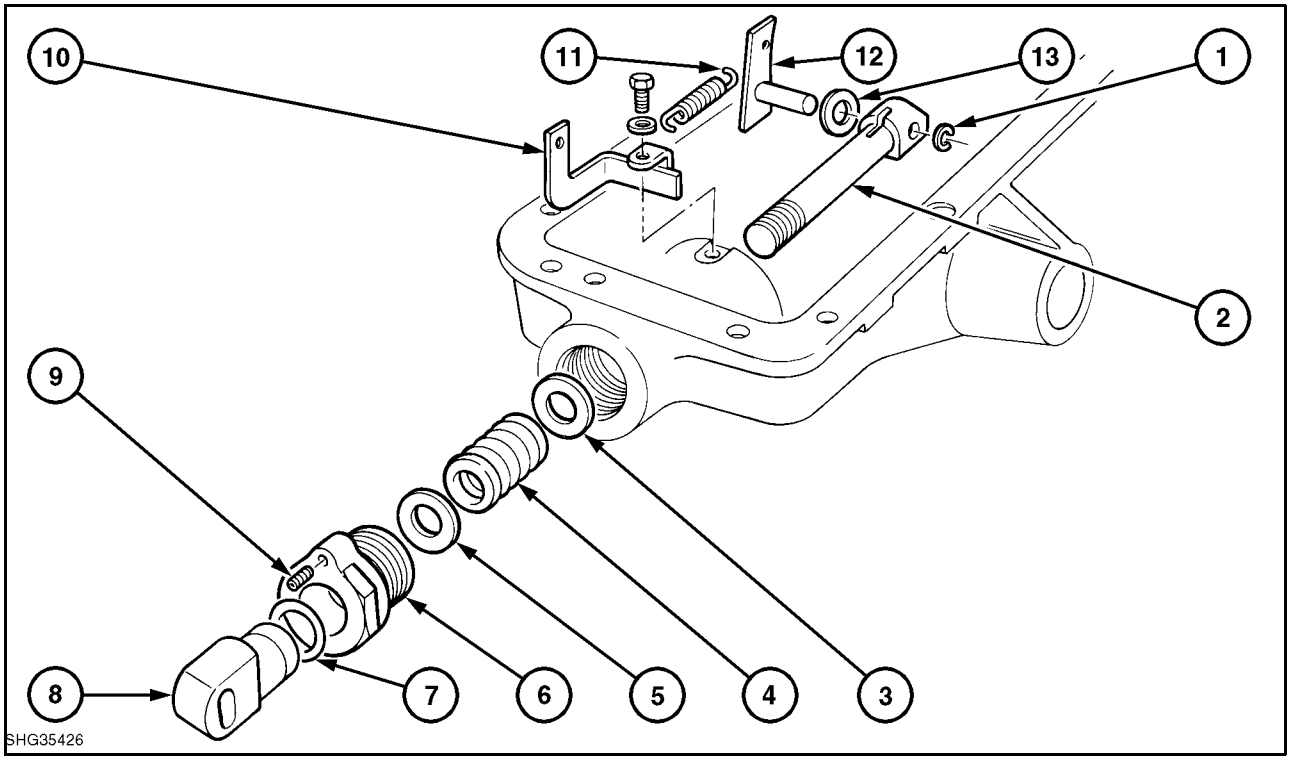

Draft Control Main Spring and Plunger 198

1. Snap Ring
2. Plunger
3. Washer
4. Spring
5. Washer
6. Retainer Nut
7. Seal
8. Yoke
9. Set Screw
10. Bracket
11. Spring
12. Selector Link
13. Washer

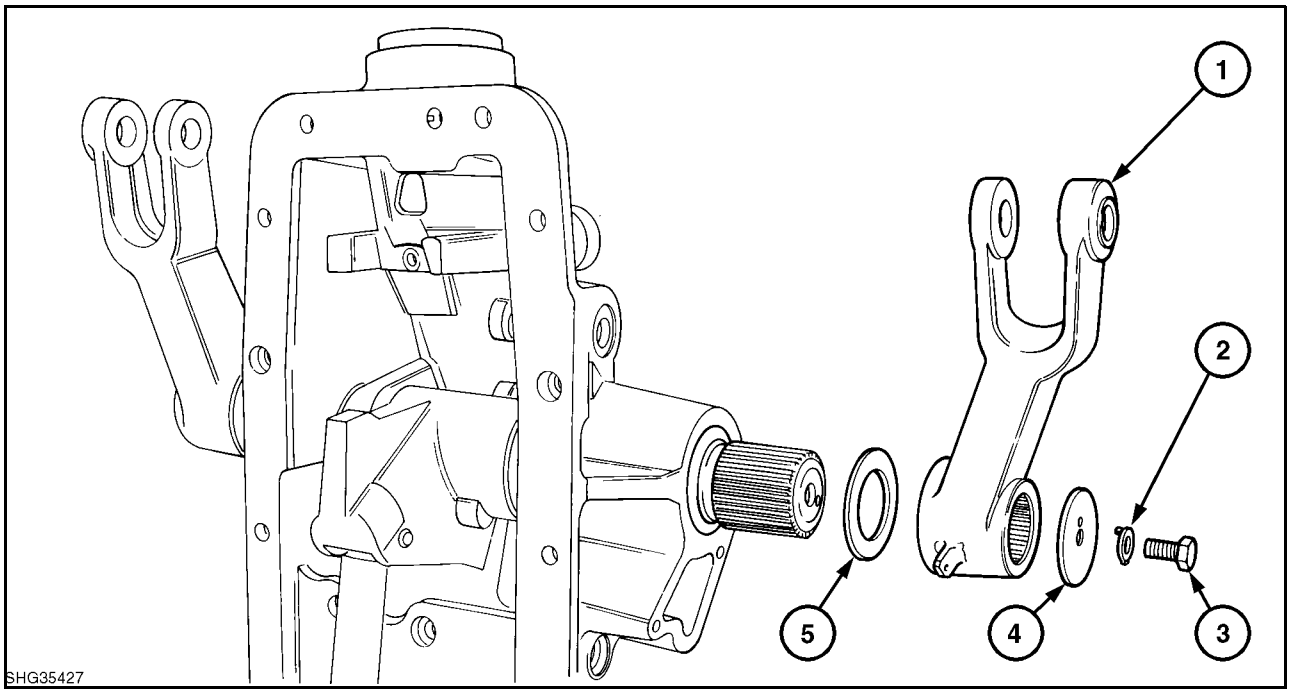

Lift Arm Assembly–Exploded View 199

1. Lift Arm
2. Locking Washer
3. Bolt
4. Washer
5. Thrust Washer

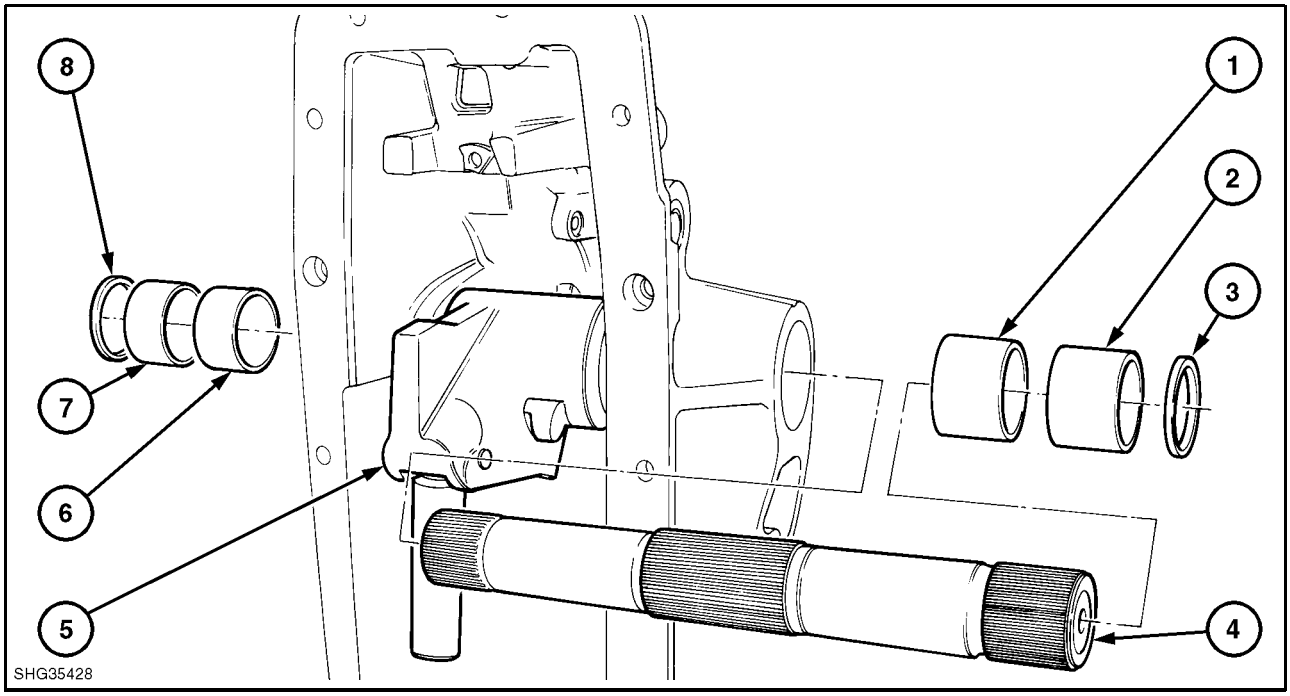

Cross Shaft Assembly–Exploded View 200

1. Bush
2. Bush
3. Seal
4. Cross Shaft
5. Piston Rod and Arm Assembly
6. Bush
7. Bush
8. Seal

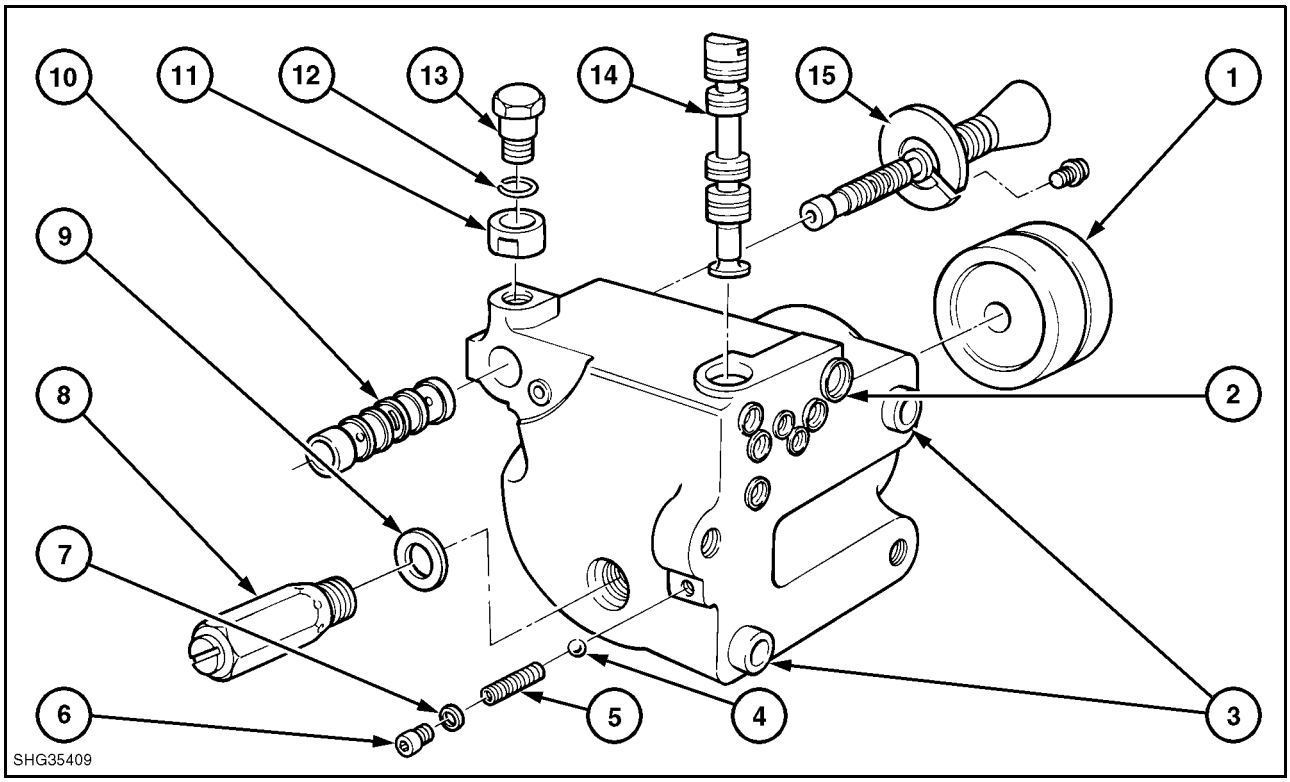

Hydraulic Lift Cylinder–Exploded View 201

1. Piston
2. 'O' Rings (7 off)
3. Ring Dowels
4. Ball
5. Spring
6. Plug
7. 'O' Ring
8. Safety Valve
9. Seal
10. Control Valve Bush
11. Diffuser
12. 'O' Ring
13. Exhaust valve
14. ASC Valve Spool
15. Control Valve

7. Disassemble lift cylinder with reference to Figure 201.

8. Use a soft metal rod inserted through safety valve bore eject lift cylinder piston.

9. Discard all 'O' rings and seals

NOTE: *The lift cylinder safety valve is not serviceable.*

10. Disassemble the control valve with reference to Figure 202.

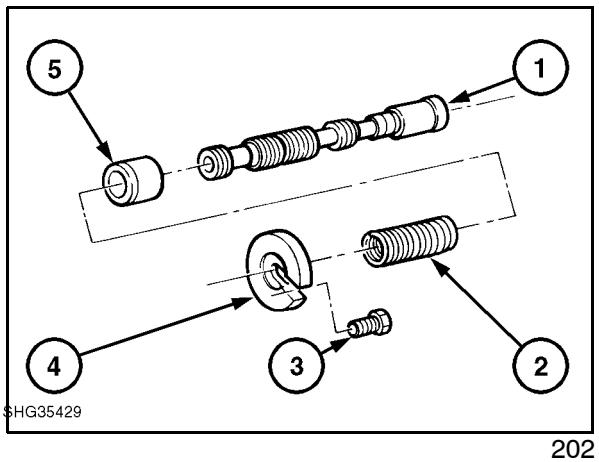

202

Lift Cylinder Control Valve

1. Spool
2. Spring
3. Bolt
4. Plate
5. Sleeve

11. Where necessary, remove remaining plugs from lift cover. Under normal circumstances the removal of these plugs is not necessary.

INSPECTION AND REPAIR

1. Wash all parts in suitable cleaning agent such as paraffin (kerosene).
2. Check oil passages are free from obstruction.
3. Examine valves and bore for wear, burrs or scratches. Minor damage to valve may be removed with fine abrasive.
4. If the control valve bushing requires replacement remove the bushing using Tool No T.8510 or FNH 02191 for North America.

   The control valve bushing is colour coded and the original size as fitted by the factory is indicated by a colour 'spot' on the cylinder casting adjacent to the control valve bore. Always install a new bush with the same colour code markings.

   When replacing the bushing, the bush should be lubricated and drawn through the bore, Figure 203.

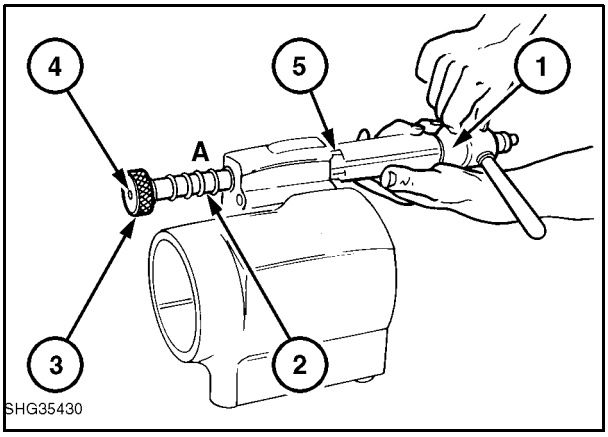

203

Installing Control Valve Bushing

A Bush Protrusion
1. Tool No FT. 8510 A or FNH 02191
2. Control Valve Bushing
3. Bushing locator Tool No FT. 8510-3 or FNH 10090
4. Extension Tool No. FT. 8510-1A
5. Guide and Stop Adaptor Tool No T. 8510 1K

   When the bush contacts the inner face of the guide, remove guide and continue to draw bush through the bore until the face of bush protrudes 0.1-0.103 in (2.54-2.62 mm), beyond the rear face of the lift cylinder (A), Figure 204.

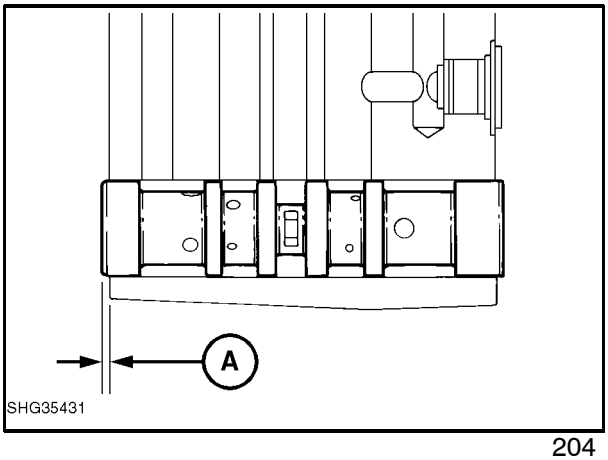

204

5. Ensure valves are thoroughly washed before re-assembly and move freely in their bores. Heavy scoring of the ASC valve bore necessitates replacement of lift cylinder.

6. Where a new lift cylinder is required select largest control valve and ASC valve spools, which when lightly lubricated, will operate in bore without binding when turned through 360° and operated over full length of stroke.

NOTE: *The control valve bushing and ASC valve bores are colour coded only as a guide for matching the valve to the bore. To obtain an optimum fit a proprietary brand of metal polish may be used to lap a slightly oversize valve into the bore. Ensure all traces of polish are washed away and the components are dried prior to re-assembly. For valve sizes refer to Specifications, Section H.*

7. If arm (2), piston rod (3) or retaining pins (1) and (4) are worn, separate rod and arm assembly. Refer to Figure 205. The pins are an interference fit into the arm, to remove pins use a suitable lever between rod and end face of pin.

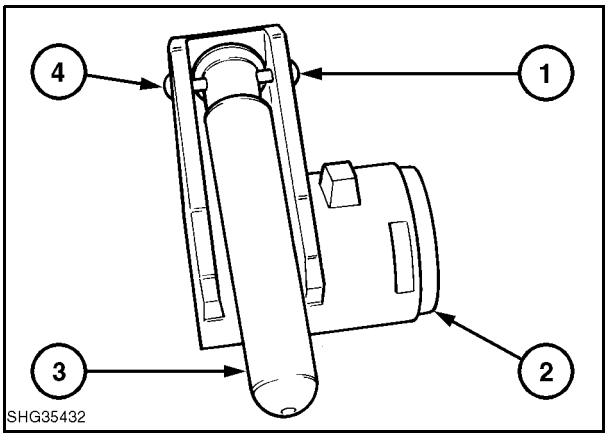

205

RE-ASSEMBLY

Re-assembly follows the disassembly procedure in reverse.

During re-assembly observe the following:

- Renew all 'O' rings and seals.
- Install piston 'O' ring (1) and back-up seal (2) as shown in Figure 206.

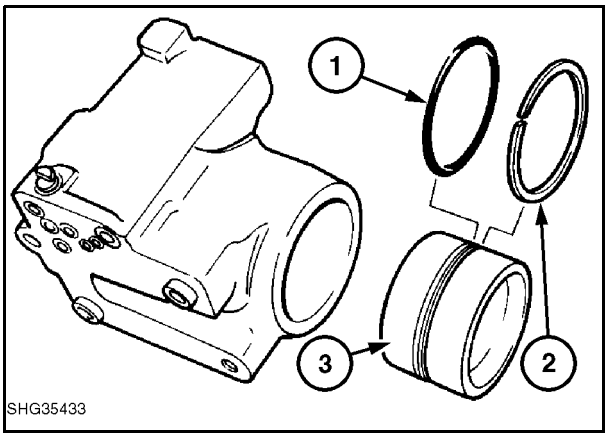

206

- To aid installation of piston (3), Figure 206 into lift cylinder and prevent damage to the piston seals, a guide can be manufactured to the dimensions shown in Figure 207.

Piston Installation Guide

A. 105 mm (4.126 inch)
B. 134 mm (5.25 inch)
C. 3 mm (0.12 inch)
D. 40 mm (1.62 inch)
E. 155 mm (6.0 inch)

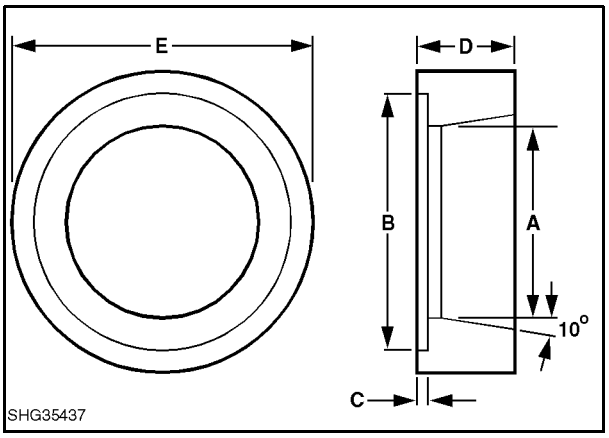

207

- Install piston (1) into cylinder (3) using guide (2) as shown in Figure 208. If a guide is not available and installation is difficult a piston ring compressor may be used to compress the seals.

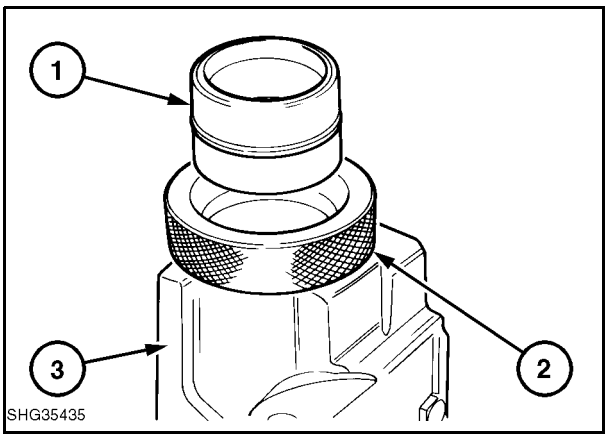

208

- Ensure the lift cylinder retaining bolts are installed in the correct locations and torqued to 224–271 Nm (165–200 lbf ft), Figure 209.
- Prior to installation of the cross shaft coat the shaft and lip seals with grease.
- The following torque procedure must be observed when tightening the lift arm retaining bolts.

  Install the lift arms and tighten the left hand arm retaining bolt to a torque of 27–40 Nm (20–30 lbf ft). Lock the bolt in position with the tab washer. Refer to Figure 199.

  Raise both lift arms and tighten the right hand arm retaining bolt sufficiently to allow the arms to lower under their own weight. Lock the bolt in position with the tab washer. **Do Not** over tighten bolts as damage to the cross shaft seals will occur.

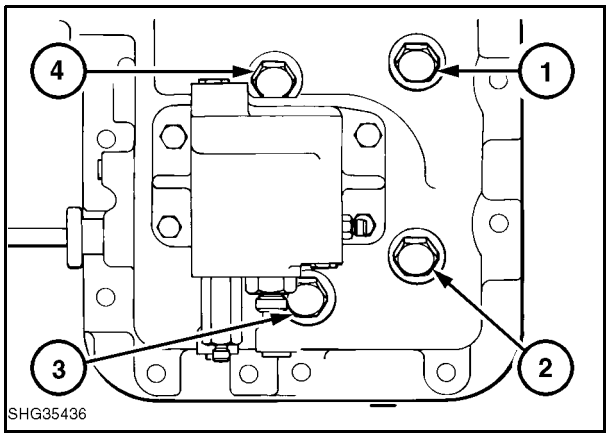

209

Lift Cylinder Retaining Bolt Locations
(Viewed from Top of Hydraulic Lift Cover)

1. 76 mm (3 in) Bolt
2. 64 mm (2.5 in) Bolt
3. 57 mm (2.25 in) Bolt
4. 76 mm (3 in) Bolt withThin Bolt Head

INTERNAL LINKAGE ADJUSTMENTS

Prior to making internal linkage adjustments examine the linkage as follows:–

External Linkage Comonents

1. Set–up Plate
2. Position/Draft Control
3. Lift Control

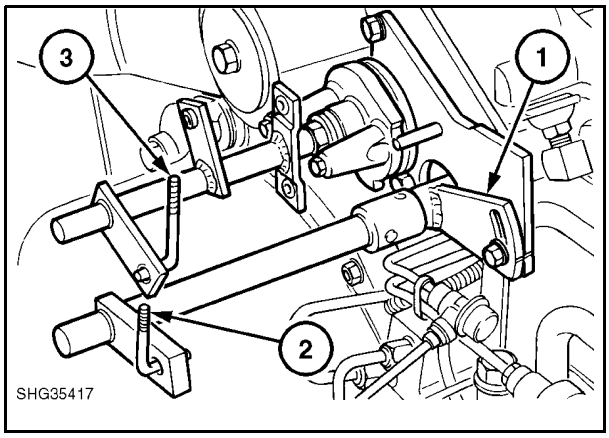

210

1. Move the lift/ control and the position/draft control levers to various positions and at each position manually move the lift arms up and down while checking that the internal linkage moves freely and the components do not bind or stick.

Internal Linkage Comonents

1. Cam Roller
2. Over Travel Spring
3. Pivot Block
4. Control Valve

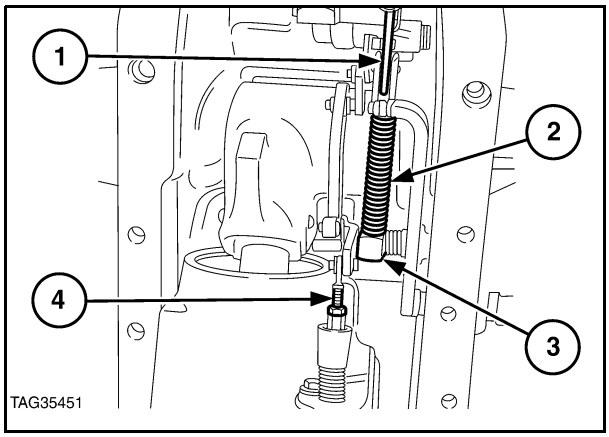

211

2. With the lift arms lowered, turn the lift/lower control counter clockwise to the raised position, which will move the control valve inwards.
3. Turn the position/draft control back and forward and observe the travel of the roller across the cam.

Internal Linkage Comonents

1. Selector Arm
2. Rod and Cam Roller Assembly
3. Washers
4. Cam

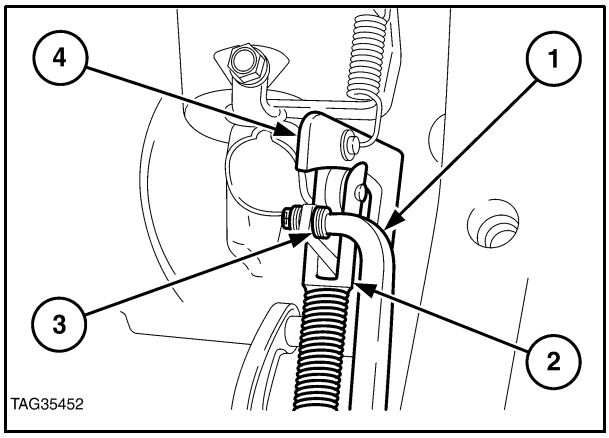

212

4. The roller should be square with the cam and move parralell (2) and not at an angle (1) across the cam.
5. The roller linkage can be adjusted by shimming, Refer to Figure 195 and 196. Do not over shim or elliminate all sideways movement. Adjust linkage alignment and replace worn components if required.

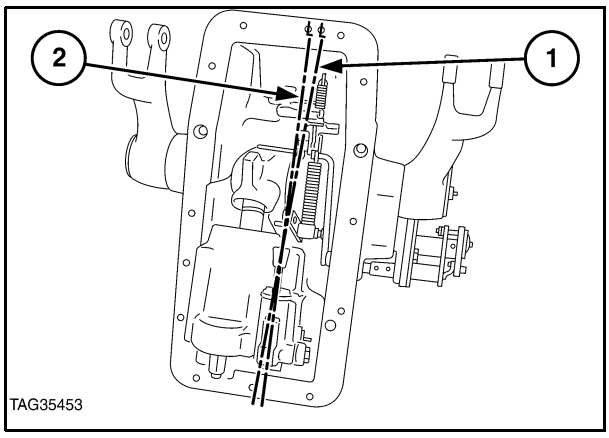

213

Draft Control Mainspring Adjustment

The draft control mainspring must be checked before carrying out any other adjustment.

1. Move lift arms (3) to fully raised position
2. Turn the lift/lower (4) and position/draft (5) controls until the control rod and roller (1) does not touch the cam (2) and the control valve spool (6) is not under tension and the linkage is free to move.

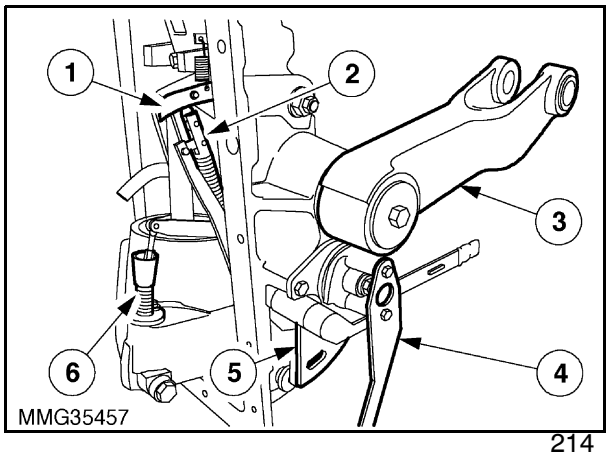

214

3. Screw in yoke to preload the draft control mainspring, then unscrew the yoke to remove any pre-load.

Draft Control Main Spring Adjustment

1. Hydraulic Lift Cover
2. Draft Control Plunger
3. Washer
4. Draft Control Main Spring
5. Washer
6. Yoke
7. Seal
8. Set Screw
9. Retainer Nut

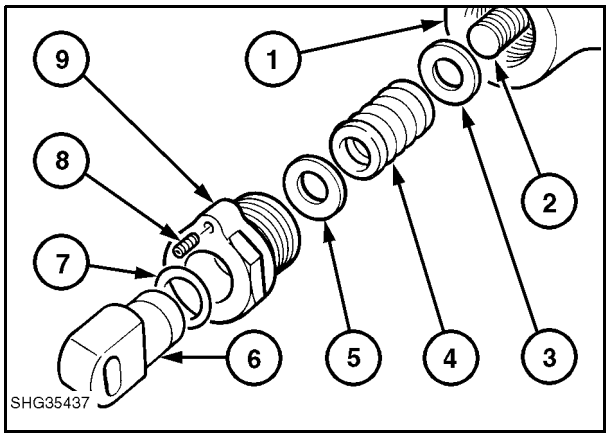

215

4. Turn retainer nut (4) counterclockwise to create free play in the draft control mainspring (2), then turn clockwise until the free play has been elliminated. The use of a screwdriver blade (3) or feel by hand can determine when freeplay has been eliminated.
5. Tighten the retainer nut set screw (1).

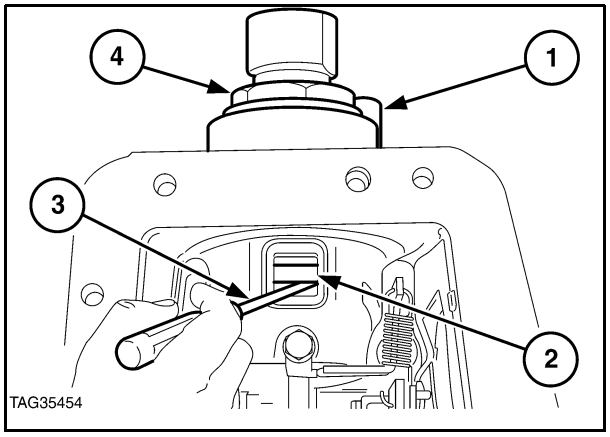

216

6. Screw the yoke (1) onto the plunger until all free play is eliminated and ensure the hole in the yoke is horizontal.

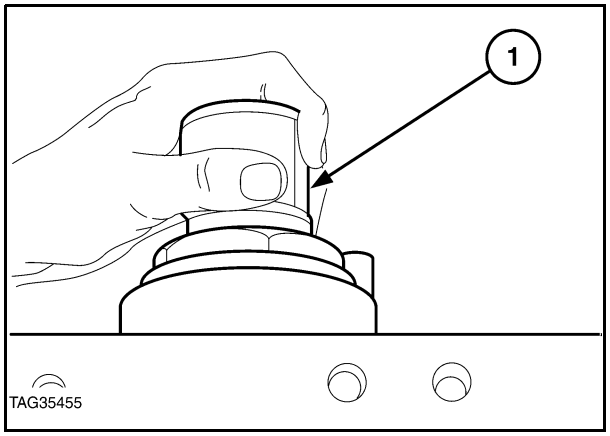

217

Draft and Position Control Adjustments

In order to complete the position and draft control adjustments it is necessary to use a control valve setting tool.

This tool is available as Tool No FNH 00014 or can be manufactured to the dimensions shown in Figure 218.

It is recommended that the tool is manufactured from 3 mm gauge plate.

Locally Manufactured Control Valve Setting Tool

A. 20 mm (0.8 in)
B. 11.7 mm (0.46 in)
C. 12 mm (0.5 in)

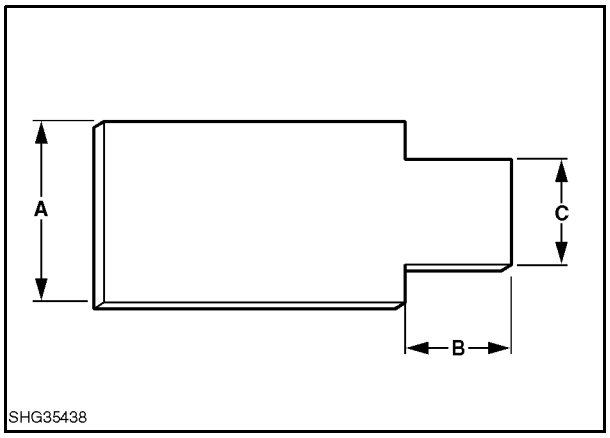

218

Draft Control Adjustment

1. Ensure the draft control mainspring has been adjusted as previously described.
2. Place lift arms (2) in fully lowered position
3. Adjust the eccentric shaft (1) until the lobe on the eccentric is pointing into the top of the lift cover.

NOTE: *To ensure the lift cylinder piston has reached the fully lowered position remove the cylinder safety valve. Replace the safety valve when piston has moved to the fully lowered position.*

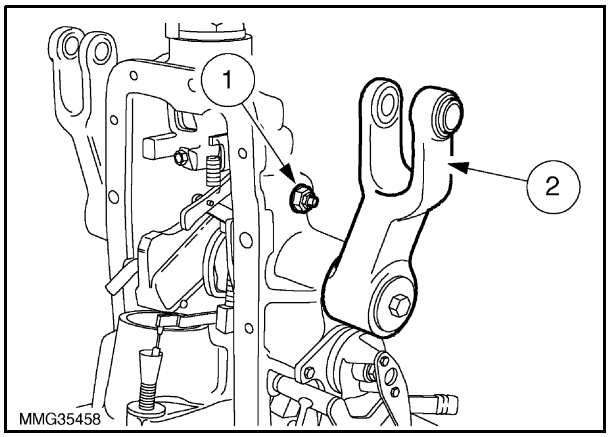

219

4. Set the position/draft control set-up plate (3) in the draft position and move the lift/lower control until the notch on the body (2) is 1 mm to the right of the draft control notch on the support.
5. Check that the rod and roller assembly over travel spring (1) is not being over compressed as to create a gap between the pivot block and washer. If spring is being compressed adjust turnbuckle (4) on control valve.

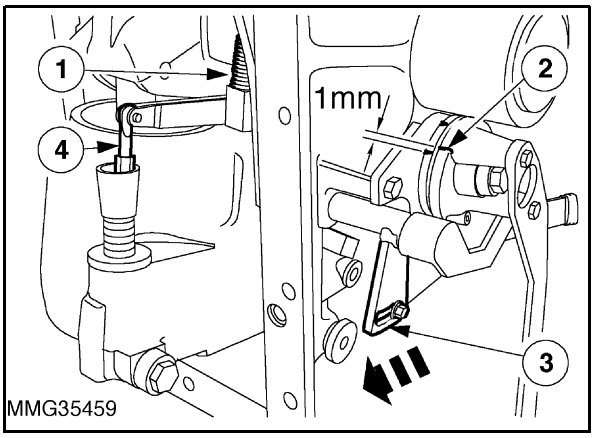

220

6. Gradually reposition the position/draft control set-up plate so that the control valve moves aproximately 2mm further into its bore.

7. Clamp setup plate in this position with a locking bolt.

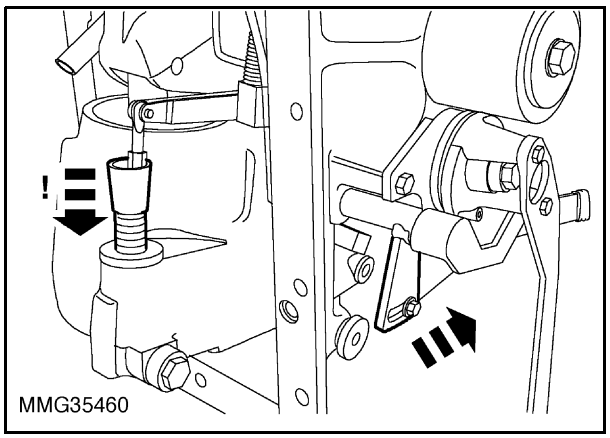

221

8. Move the lift arms up (1) and down and observe the movement of the control valve (3).
9. Loosen the locking bolt and **gradually** move the position of the position/draft control set-up plate (2) until **no movement** of the control valve is observed when the lift arms are raised and lowered.

   Retighten the setup plate locking bolt each time this test for movement of the control valve is undertaken.

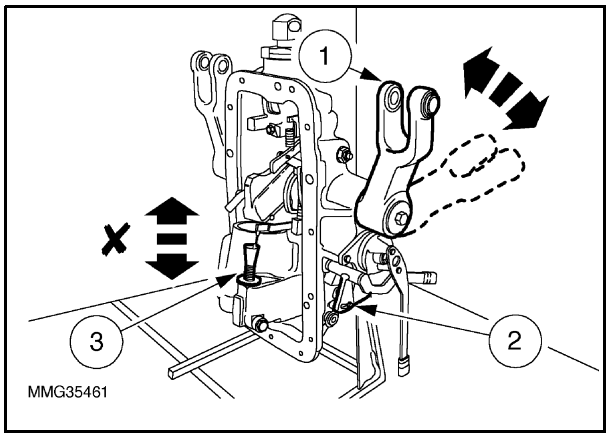

222

10. Check the position of the control rod roller using checking gauge (1) Tool No FT. 8527. The distance between the top of the roller and mounting face of the top cover should be ±1 mm of the 49.5mm (1.95 in) dimension of the setting gauge.

    If position of the roller is more than 1 mm different than the dimension on the setting gauge repeat the setting procedure in steps 1 to 7.

    This procedure eliminates the effect of wear in the linkage and should be used in preference to relying on the setting gauge alone to set the position of the roller.

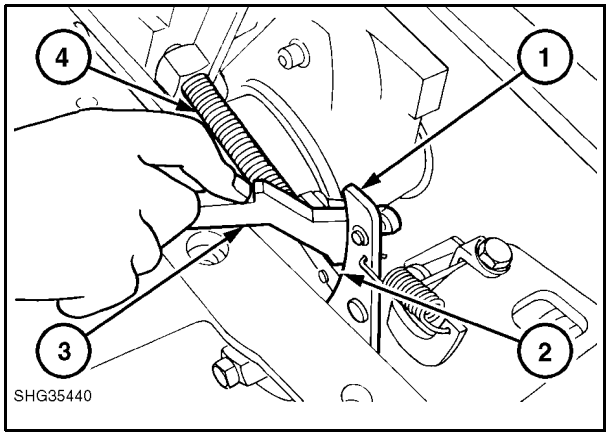

223

Checking Control Rod Roller for Draft Control

1. Setting Link (Cam)
2. Control Rod Roller
3. Setting (Checking) Gauge, Tool No FT.8527
4. Control Rod

11. Using a small hacksaw, make a slot (1) in line with the draft control mark (2) on the set-up plate.

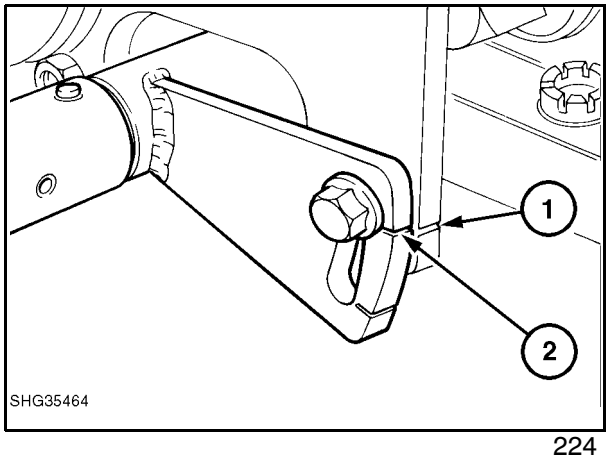

224

12. Locate control valve setting tool (1) onto end of the control valve bush and adjust **control valve turnbuckle** until end of spool just touches the tool. When this occurs the spool will be set at 11.7 mm (0.46 in) from the end of the bushing. Refer to Figure 226.
13. Apply New Holland thread sealant 82995773 to turnbuckle threads.
14. Tighten turnbuckle locknut and recheck setting.

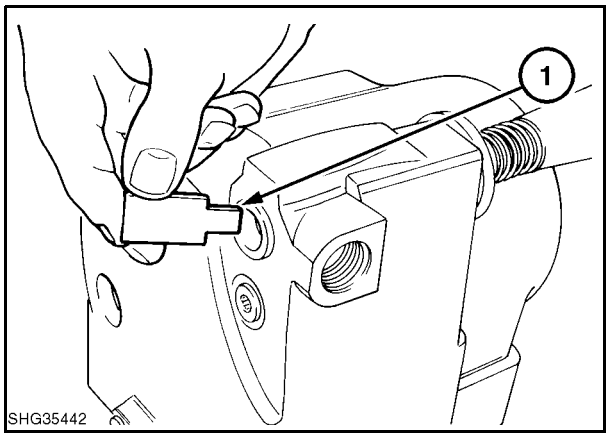

225

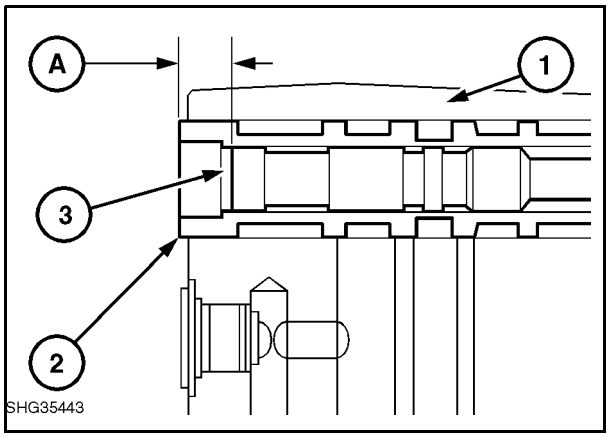

226

Control Valve Spool Setting

A. 11.7 mm (0.46 in)
1. Lift Cylinder
2. Control Valve Bushing
3. Control Valve Spool

Position Control Adjustment

1. Ensure lift arms are still in fully lowered position.
2. Move the main lift lever until the notch on the body is 1mm retarded (to the left) of the position control notch on the support.

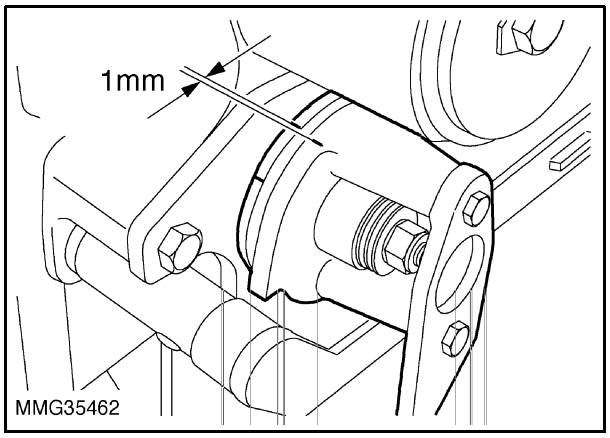

227

3. Loosen the locking bolt and move the position/draft notch (2) on the set-up plate to align with the the hacksaw slot (1) made during draft control adjustment procedure. Re tighten the locking bolt.

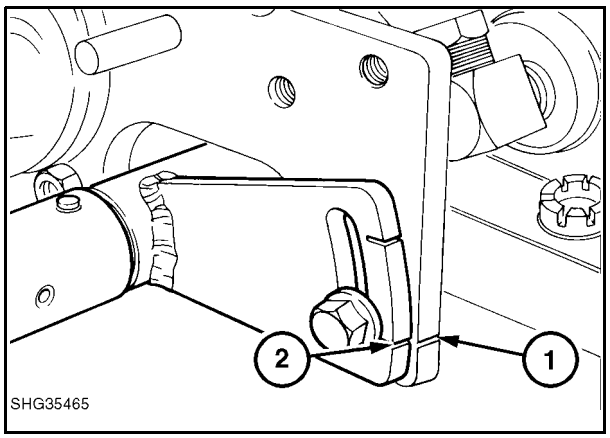

228

1. Check the position of the control rod and roller assembly from the top cover mounting face using setting gauge Tool No FT. 8527.

   Providing the position of the control rod roller is within ± 1 mm of the gauge dimension the setting is correct.

   If the difference is greater, repeat the **draft control adjustment** to check that hacksaw slot has been correctly positioned.

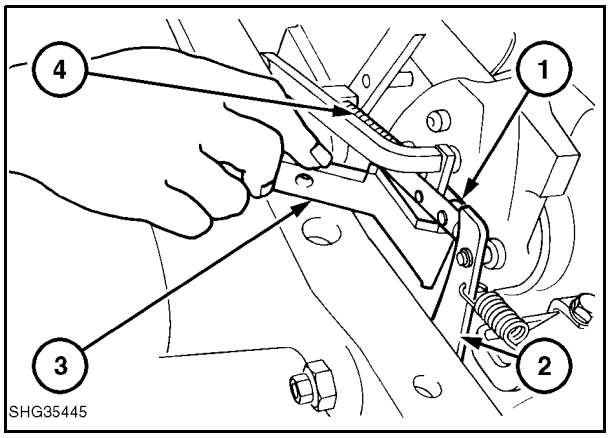

229

Setting Control Rod Roller for Position Control

1. Control Rod Roller
2. Cam
3. Setting Gauge, Tool No. FT.8527
4. Control Rod

2. Position the control valve setting tool (1) onto the end of the control valve bush and turn the **eccentric shaft**, Refer to Figure 219 until the end of the spool just touches the end of the tool. When this occurs the spool is set at 0.46 in (11.7 mm) from the end of the bushing. Refer to Figure 231.

3. Tighten the eccentric shaft locknut and recheck spool setting.

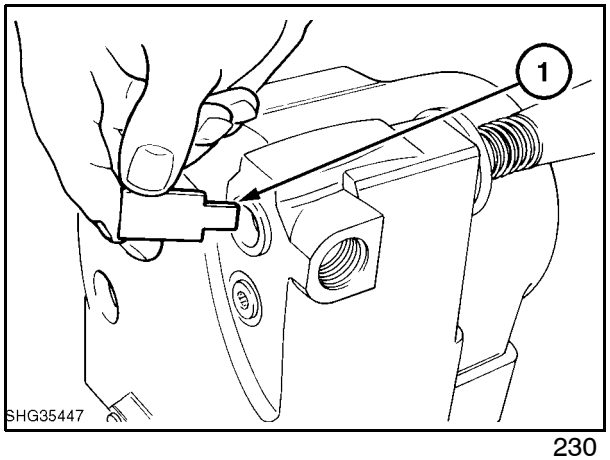

230

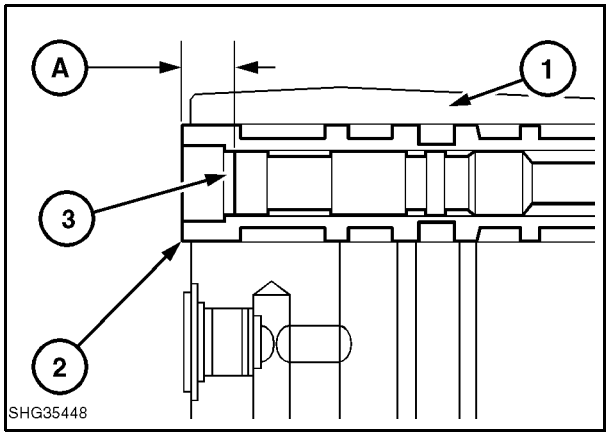

231

Control Valve Spool Setting

A. 0.46 in (11.7 mm)
1. Lift Cylinder
2. Control Valve Bushing
3. Control Valve Spool

INSTALLATION

1. Apply a thin bead of New Holland gasket sealer 82995770 to **BOTH** sides of the hydraulic top cover gasket. The bead should be continuous around the entire face of the gasket and to a thickness of approximately 1mm (1/32 in).
2. Install lift cover onto the rear axle centre housing and tighten retaining bolts to a torque of 135–170 Nm (100–125 lbf ft).
3. Manually raise lift arms (engine not running) and check that lift arms fall slowly under their own weight. If the arms do not fall recheck the torque applied to the lift arm retaining bolts as described on Page 4-199.
4. Continue to install the lift cover, linkage and cab/platform using the removal procedure in reverse.
5. When installing lift control spring ensure long end of spring is attached to the nstal Lift control spring
6. Reconnect the linkage and perform external linkage adjustments as detailed in Section F.

EXTERNAL HYDRAULIC CONTROL LINKAGE

1. Ensure lift/lower control tensioning spring is correctly fitted with shortest end of spring attached to bracket on rear axle

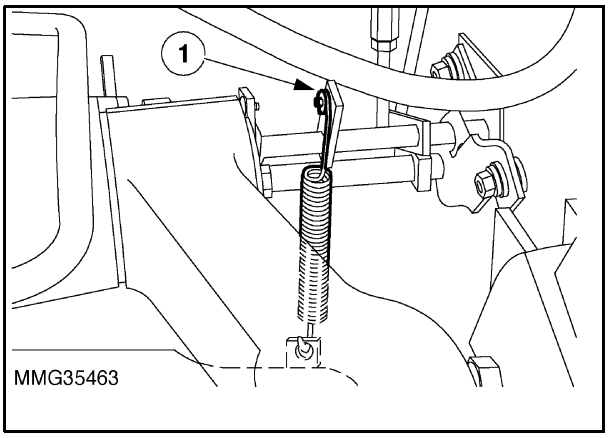

232

Selector Lever Adjustment

1. Disconnect the selector lever rod at the lower end, Refer to Figure 233.

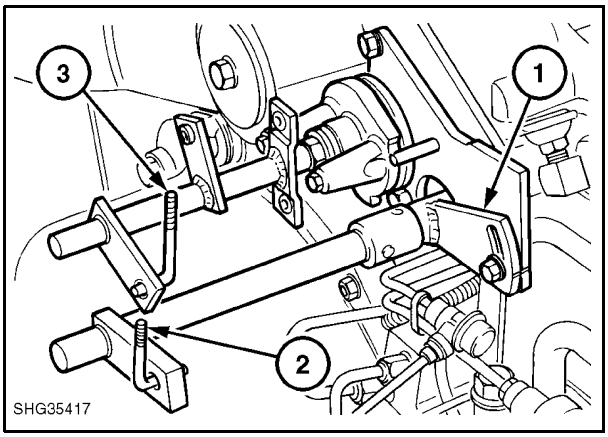

Hydraulic Lift Cover External Linkage

1. Set–up Plate Aligned With Position Control Marks
2. Position/Draft Selector Rod
3. Lift Control Rod

233

2. Ensure the position control mark (3) on the setup plate (1) aligns with the hacksaw slot (2) on the lift control support. Use a bolt to lock the setup plate in position.

NOTE: *If the hydraulic lift was removed for overhaul the setup plate will have been locked in position when performing the internal linkage adjustments.*

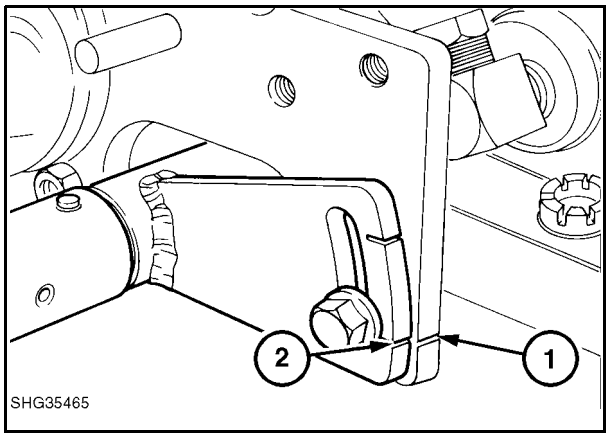

234

3. Place the position/draft selector lever in the position control notch. Refer to Figure 235.

Hydraulic Control Levers

1. Position/Draft Selector Lever
2. Position Control Setting
3. Draft Control Setting
4. Adjustable Stop
5. Lift Control Lever

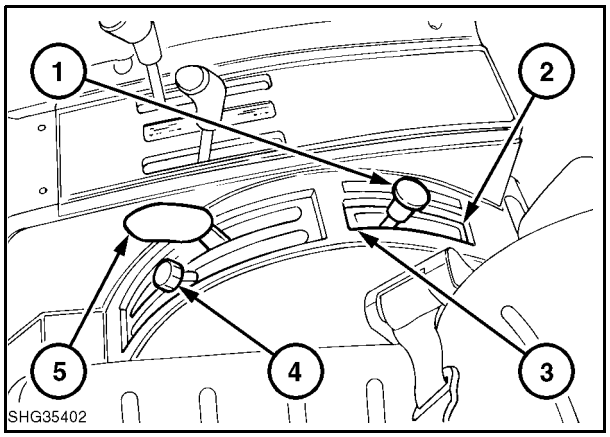

235

4. Install connecting rod between position/draft selector lever and position/draft shaft on top cover. Tighten the locknuts to a torque of 11 Nm (8 lbf ft).
5. Remove the setup plate locking bolt.

Lift Control Lever Adjustment

1. Ensure the lift arms are fully lowered and lift raise lower shaft on top cover has been turned to the fully lowered position against the mechanical stop.

2. Position the lift control lever 9 mm from the fully lowered position on the cab/platform quadrant.

3. Install connecting rod between lift control lever and raise lower shaft on top cover. Tighten the locknuts to a torque of 11 Nm (8 lbf ft).

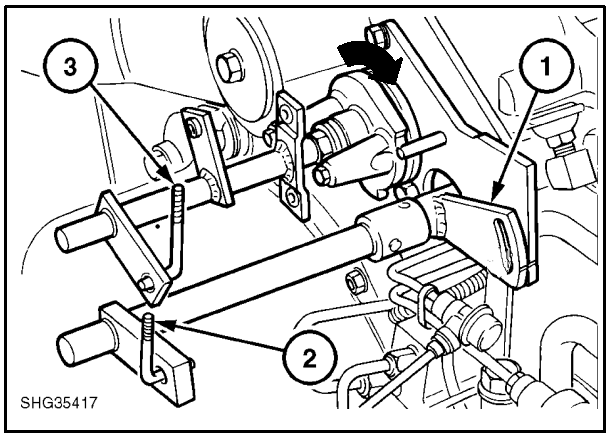

236

4. Start the engine, select **position control** and fully lower the hydraulic links.

5. Slowly pull on the lift lever and stop moving the lever at the point when the lift just starts to raise.

6. **Stop the Engine** and examine the alignment of the notch on the body and the position control notch on the support. If notches are approximately in line then external linkage adjustment is correct.

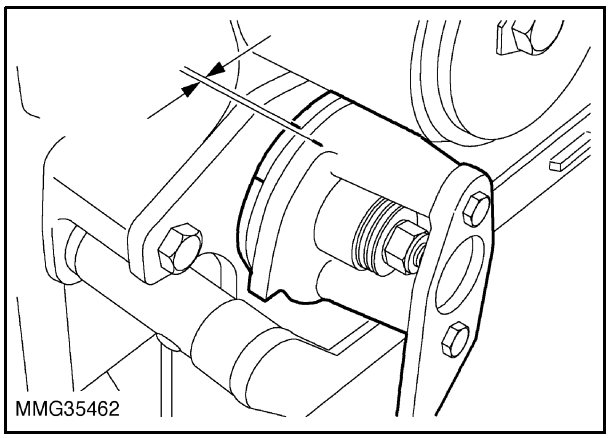

237

7. Start engine, select **draft control** and fully lower lift arms.

8. Slowly pull on the lift lever until lift arms start to raise.

9. **Stop the Engine** and examine the alignment of the notch on the body and the draft control notch on the support of the top cover. If notches are approximately in line then external linkage adjustment is correct.

10. Start engine and check that lift arms can be fully raised and lowered.

11. With the lift control lever in the fully lowered position move the selector lever from position control to draft control and check that the lift arms do not lower. If the lift arms lower during this check it is an indication that one of the internal or external linkage adjustments has been performed incorrectly.

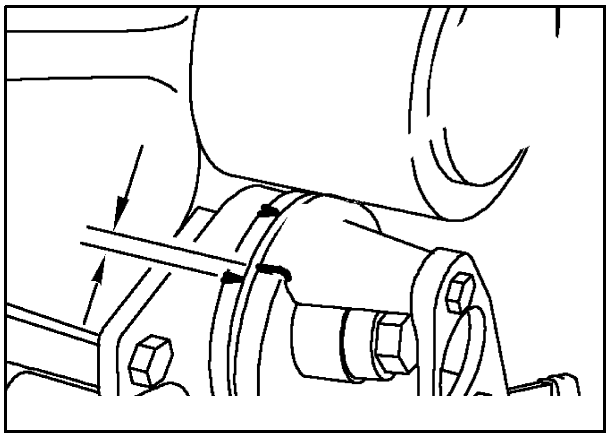

238

FIXED DISPLACEMENT GEAR TYPE PUMPS

SPECIFICATIONS AND SPECIAL TOOLS

Fixed Displacement Gear Type Pump With Integral Steering Pump

Main Hydraulic Lift Pump	
Type	Gear Type Pump
Minimum output @ 2100 engine rev/min @ 2000 lbf/in^2 (165 bar)	
New pump	35 Ltrs/min (7.7 Imp gals/min 9.3 U.S. Gals/min)
Used pump	32 Ltrs/min (7.0 Imp gals/min 8.4 U.S. Gals/min)
Pressure relief valve setting	176–183 bar (2550–2650 lbf/in^2)
Steering Pump	
Type	Gear Type Pump
Minimum output @ 2100 engine rev/min	
New pump	35 Ltrs/min (7.7 Imp gals/mim 9.2 U.S. Gals min)
Used pump	31 Ltrs/min (6.8 Imp gals/min 8.2 U.S. Gals/min)
Steering Motor Relief Valve Setting 2WD Tractors	138–145 bar (2000–2100 lbf/in^2)
4WD Tractors	166–172 bar (2400–2500 lbf/in^2)

Auxiliary Engine Mounted Fixed Displacement Gear Type Pump

Type	Gear Type Pump
Minimum output @ 2100 engine rev/min @ 165 bar (2400 lbf/in^2)	
New pump	33 Ltrs/min (7.3 Imp gals/min 8 U.S. Gals/min)
Used pump	23 Ltrs/min (5 Imp gals/min 6 U.S. Gals/min)

SPECIAL TOOLS

DESCRIPTION	TOOL NUMBER	
	V.L. Churchill	**FNH Part No. (America only)**
Pressure Gauge 0-400 lbf/in^2 (0-30 bar)	FT. 8616	FNH 06653
Pressure Gauge 0-6000 lbf/in^2 (0-414 bar)	FT. 8503A	FNH 02028
Adaptor-Pressure Test	FT. 8503-8	FNH 0705
Adaptor-Steering Flow Test	4FT.852 ($^3/_4$" x 18UNS female-$^3/_4$" JIC male)	
Adaptor-Steering Pressure Test	4FT.853 ($^{11}/_{16}$" -16UN to $^7/_{16}$" JIC male)	
Adaptor -Trailer Brake Pressure Test	4FT.854 (M18 -1.5 male to $^7/_{16}$" JIC male)	
Adaptor-Main Pump Flow/Pressure Test	4FT.858 1-14UNS Female to $^1/_4$" BSP female	
Adaptor-Main Pump Flow/Pressure Test	4FT.858/1 $^1/_4$" BSP male to $^3/_4$" JIC male	
Adaptor-Main Pump Pressure Test	4FT.858/2 $^1/_4$" BSP male to $^7/_{16}$" JIC male	
Adaptor-Steering Pump Flow Test	4FT.859 ($^{13}/_{16}$"-16UN female to $^3/_4$" JIC male)	
Flowmeter	MS. 820A or suitable equivalent	FNH 02755
Test Hose-Pressure Testing	Part No 83936707	
Test Hose-Pressure Testing	Part No 83926717	
Adaptor-Trailer Brake Valve	Part No 81862770	
Plug	Part No 83900652	
Seal	Part No 81800812	
Remote Control Valve Connectors	Procure through New Holland	

TORQUES

= Nm

= lbf ft

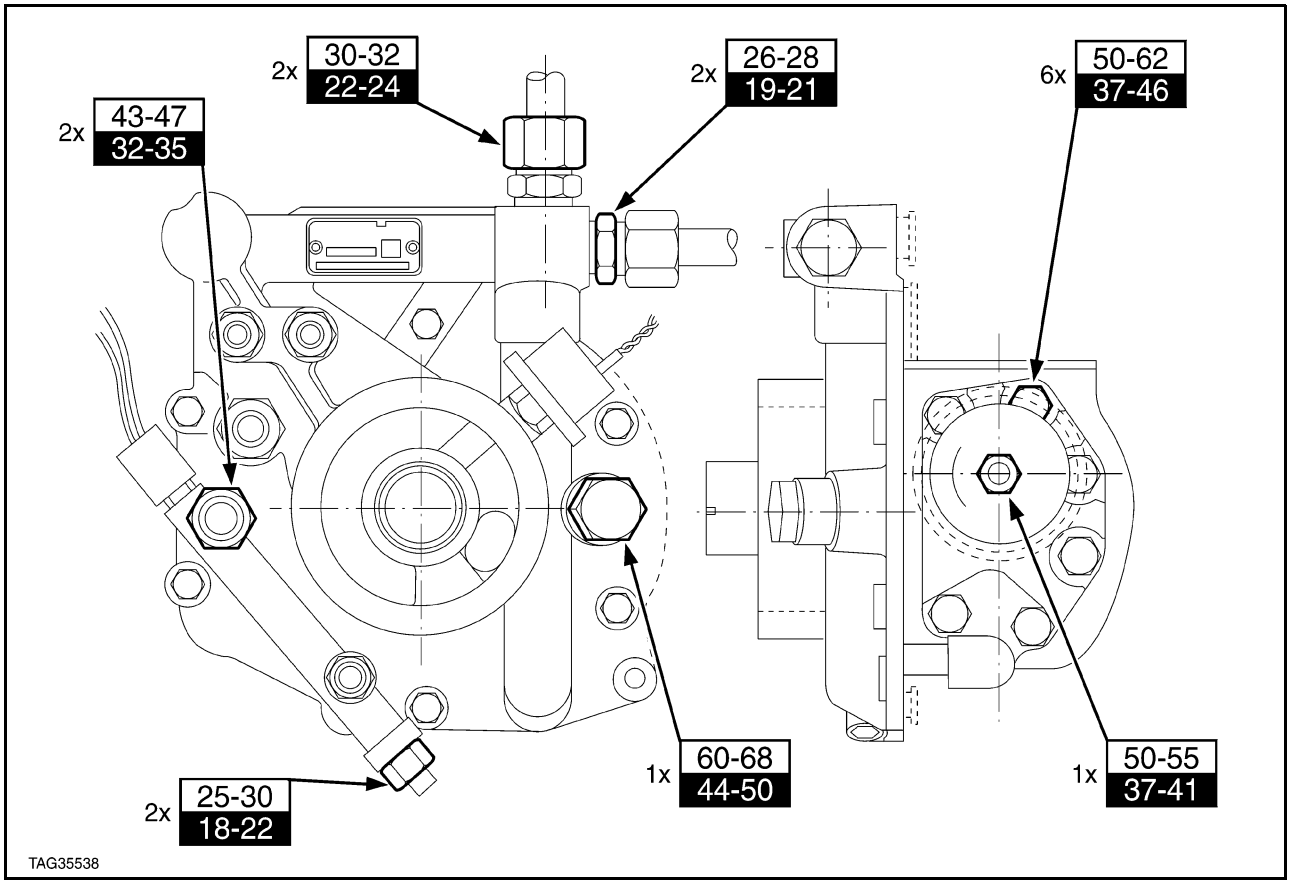

Transmission Mounted Fixed Displacement Tandem Gear Type Pump

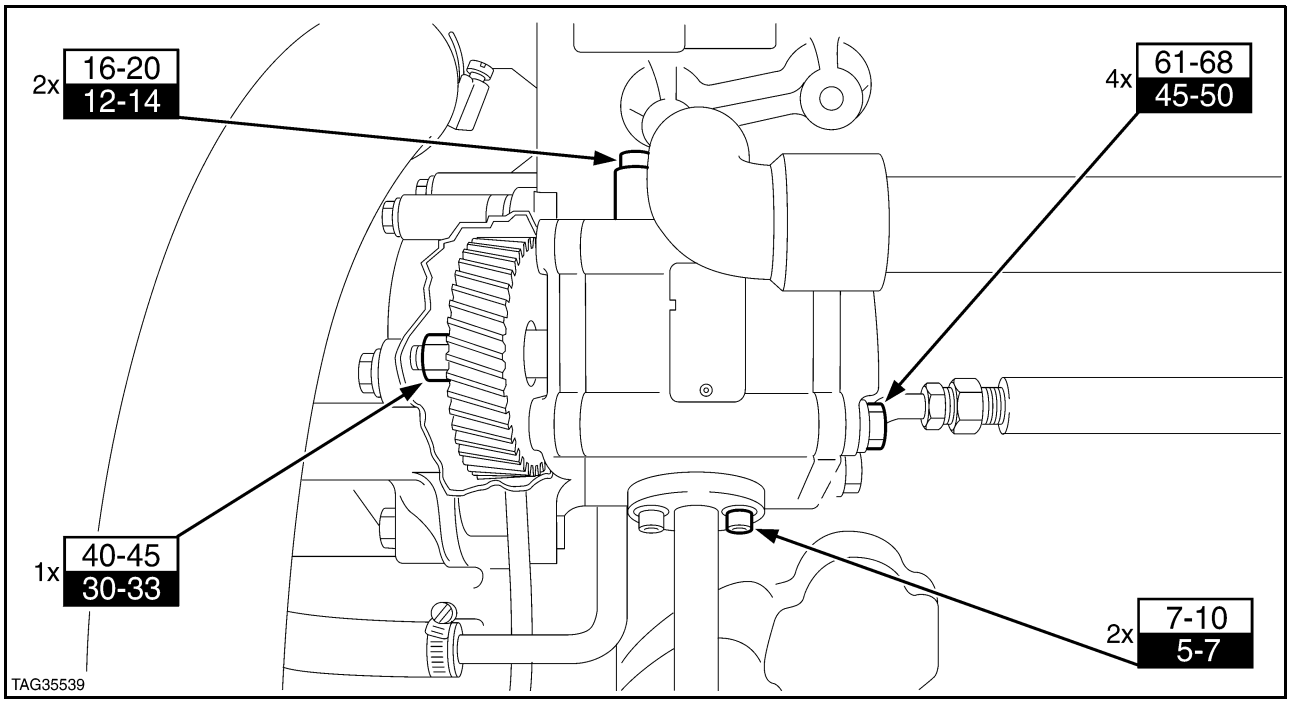

Engine Mounted Fixed Displacement Gear Type Pump

TRANSMISSION MOUNTED FIXED DISPLACEMENT TANDEM GEAR TYPE PUMP – DESCRIPTION AND OPERATION

The fixed displacement gear type pump is mounted on the right hand side of the rear transmission, Figure 239.

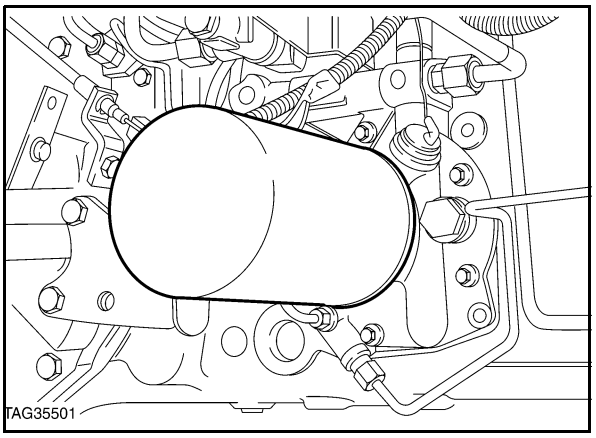

239

The pump housing contains two gear type pumps, mounted one behind the other. Refer to Figure 240 and Figure 241.

The front pump (2), Figure 240 (as mounted on the tractor) supplies high pressure oil to the trailer brakes, hydraulic lift and remote control valve circuits and is referred to as the hydraulic lift pump.

If the tractor is installed with a trailer braking system the high pressure oil from the hydraulic lift pump flows to the trailer brake valve before continuing onto the hydraulic lift assembly. This ensures the braking system has priority over the hydraulic lift circuits.

The rear pump (1), Figure 240, referred to as the steering pump, provides oil to the hydrostatic steering system and low pressure hydraulic circuits.

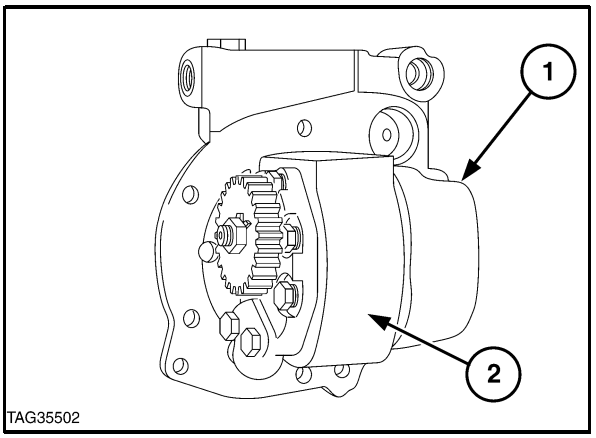

240

The low pressure hydraulic circuits operate the independent power take-off (PTO), four wheel drive disengagement, electro hydraulically operated differential lock on 12 x 12 transmissions and the dual command cutches on the 12 x 12 and 16 x 4 transmissions.

These circuits, depending on tractor build options, also provide lubrication to the PTO, dual power, 12 x 12 transmission synchronisers, bearings and output shaft and 16 x 4 or 8 x 2 transmission output shafts.

The operating pressure of these circuits is regulated by the low pressure regulating and lubrication circuit relief valves housed within the PTO assembly. Refer to the PTO Section of the Repair Manual for description and operation of these valves.

Both pumps share a common full flow intake filter.

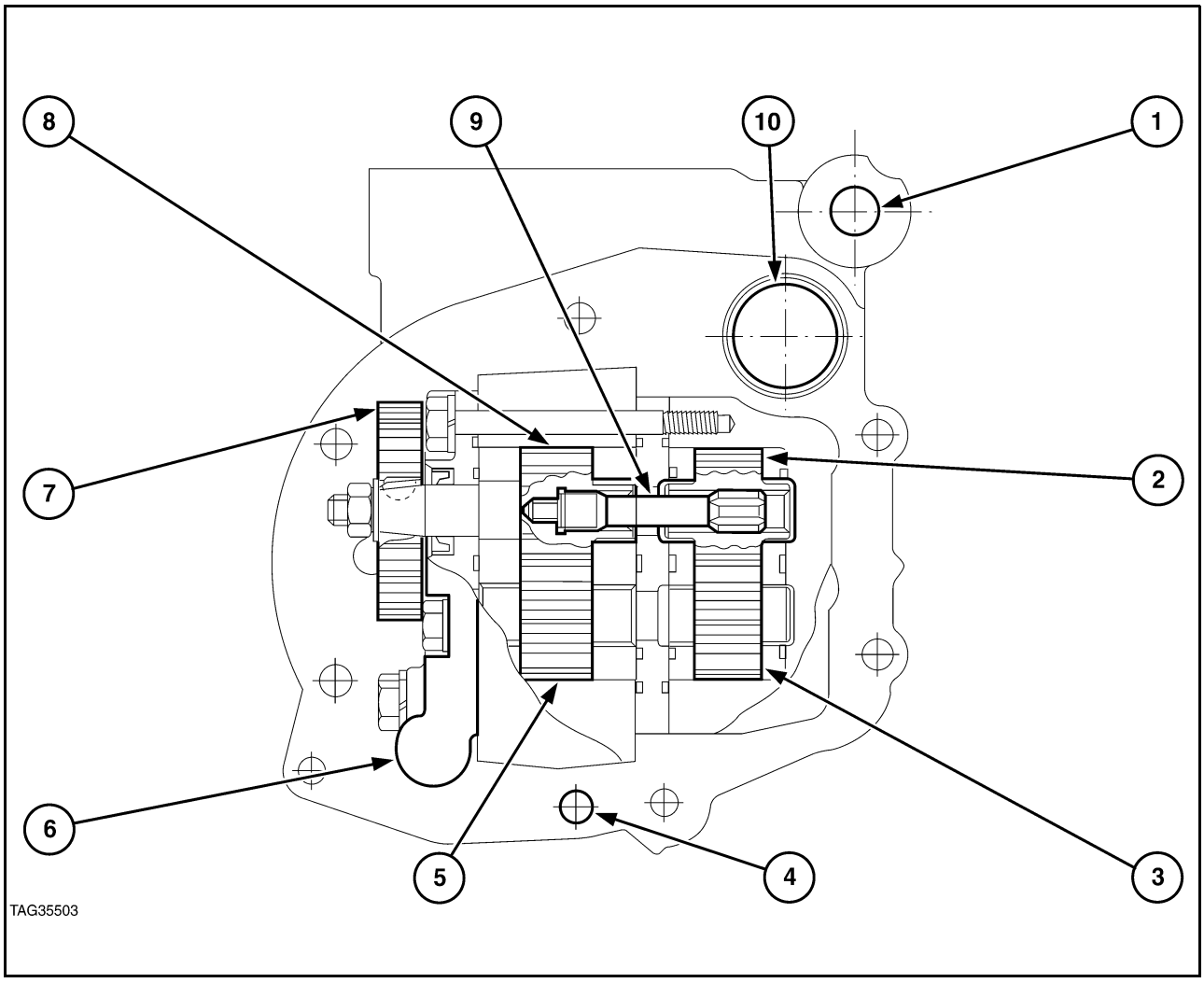

Cross Section of Transmission Mounted Fixed Displacement Gear Type Pump 241

1. Outlet Port to Hydraulic Lift
2. Steering Pump Drive Gear
3. Steering Pump Driven Gear
4. Outlet Port to PTO
5. Hydraulic Lift Pump Driven Gear
6. Hydraulic Lift Pump Outlet Port
7. Pump Assembly Drive Gear
8. Hydraulic Lift Pump Drive Gear
9. Drive Link
10. Pump Inlet Port (Both Pumps)

Pump Operation

The drive for the hydraulic lift pump (front pump) is taken via an idler gear driven from the PTO drive clutch hub. A drive link between both pumps, transmits the drive through to the steering pump (rear pump), Figure 241.

The pump gears in both pumps revolve at the same speed and are in constant operation whenever the engine is running. Both sets of spur gears are supported within the pump by aluminium bearing blocks, incorporating steel bushes with porous bronze and PTFE plus lead linings.

The fixed displacement gear type pump assembly is supplied with oil from the rear axle centre housing reservoir via an intake tube attached to the pump inlet port.

When the engine is running, the PTO idler gear drives the pump and oil is drawn through the inlet port and intake filter into the spaces between the teeth of the gears within each pumping unit. As the pumping gears rotate, the oil in the spaces between the gear teeth is trapped and carried between the teeth and the pump body to the pump outlet ports, where it is discharged to the hydraulic circuits.

The pump inlet filter is monitored for blockage by a vacuum switch (1) operating at a vacuum of 16 in. Hg, Figure 242. The switch is also connected in series with a low oil temperature switch (7) and warning light. If the oil temperature is above 40°C (104°F) and the filter is restricted, causing the vacuum switch to operate, the warning light on the instrument panel will illuminate.

If a tractor is fitted with the electronic instrument cluster, an extra switch to monitor high hydraulic oil temperature is also installed. This switch, where fitted, is positioned in the port immediately to the left of the low temperature switch.

The low pressure hydraulic oil supply from the steering pump is monitored by a pressure switch (5) in the pump and operates a warning light whenever the oil pressure drops below 75–80 lbf/in^2. The light will extinguish when the oil pressure increases to 115–125 lbf/in^2.

The hydraulic lift pump is protected from excessive pressures by a pressure relief valve which operates at 2550–2650 lbf/in^2 (176–183 bar). The valve allows excess oil to return directly to sump whenever an overload condition occurs. This valve can be replaced without having to remove the pump from the tractor.

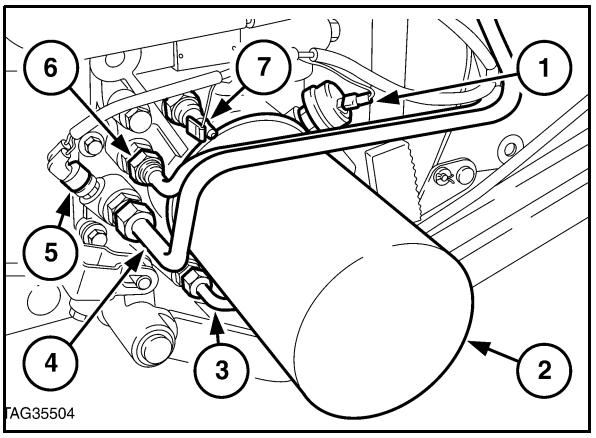

242

Fixed Displacement Gear Type Pump Installation (Tractor with 16 x 4 Transmission Shown)

1. Blocked Filter Vacuum Switch
2. Full Flow Inlet Filter with By–pass Valve
3. To Dual Power (where fitted)
4. Return from Steering Motor
5. Pressure Switch–Low Pressure Circuit
6. To Steering Motor
7. Oil Low Temperature Switch

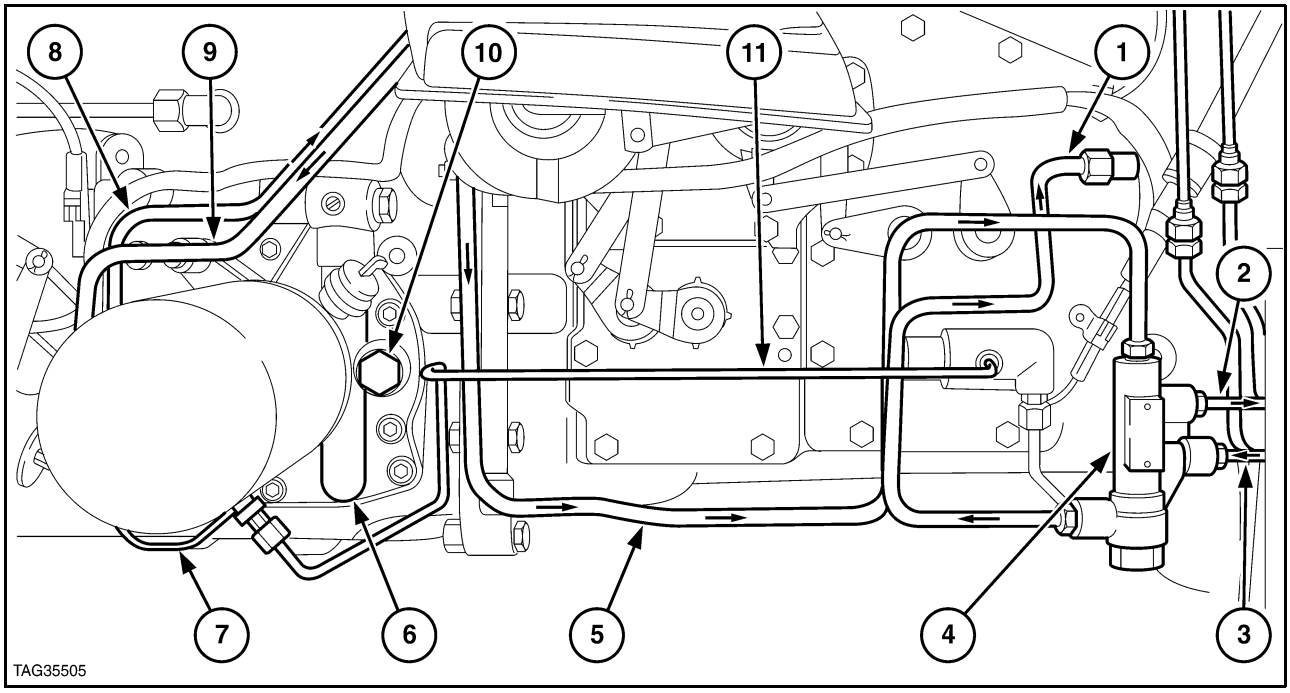

Fixed Displacement Gear Type Pump Installation (Tractor with 12 x 12 Transmission Shown) 243

1. To Transmission Lubrication
2. To Oil Cooler
3. Return from Oil Cooler
4. Oil Cooler By–Pass Valve
5. From PTO Valve
6. Hydraulic Lift Pump Output Gallery
7. To Electro Hydraulic Differential Lock
8. To Steering Motor
9. Return from Steering Motor
10. Hydraulic Lift Pump Pressure Relief Valve
11. To Front Wheel Drive Disengagement System

The steering pump does not contain a pressure relief valve and is protected by the relief valve contained within the power steering motor.

Figure 243 shows the installation of the fixed displacement gear type pump on a tractor fitted with a 12 x 12 transmission. The arrows indicate the flow of oil through the external pipework from the steering pump within the assembly.

On tractors installed with 16 x 4 or 8 x 2 transmissions the oil cooler by–pass valve is not fitted and oil flows directly from the PTO valve to the oil cooler, before providing pressure lubrication to the transmission and dual command clutches (where fitted).

TRANSMISSION MOUNTED FIXED DISPLACEMENT TANDEM GEAR TYPE PUMP – OVERHAUL

Removal

1. Remove right hand rear wheel.

2. Remove rear axle drain plug, Figure 244 and drain the oil from the rear axle assembly.

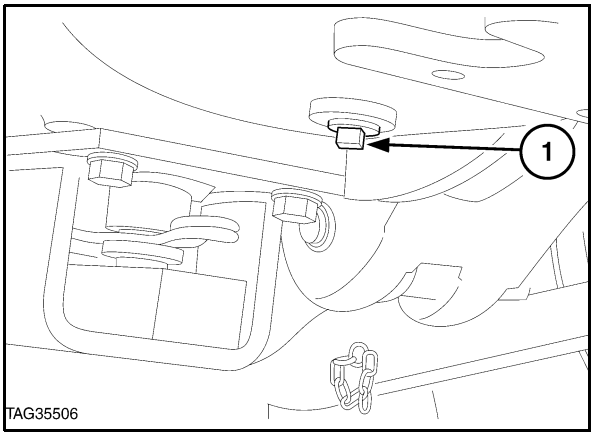

244

3. Disconnect all the electrical connections to the switches mounted on the pump, Figure 245.

Fixed Displacement Gear Type Pump Installation (Tractor with 16 x 4 Transmission Shown)

1. Blocked Filter Vacuum Switch
2. Full Flow Inlet Filter with By–pass Valve
3. To Dual Power (where fitted)
4. Return from Steering Motor
5. Pressure Switch–Low Pressure Circuit
6. To Steering Motor
7. Oil Low Temperature Switch

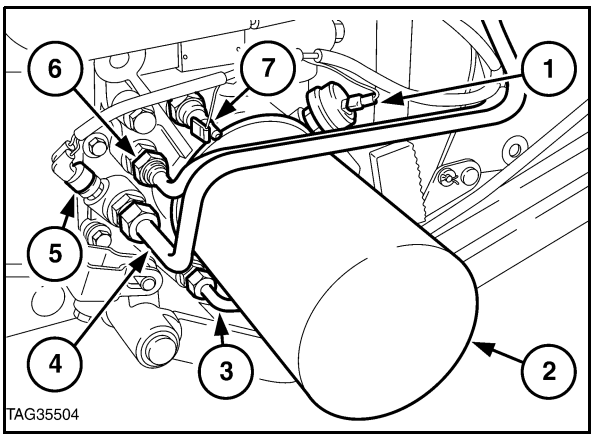

245

4. Disconnect and plug all hydraulic pipes attached to the pump. Refer to Figure 245 and Figure 246.
5. Remove pump mounting bolts and lift pump from transmission housing.

Hydraulic Pump Installation
Tractor with 12 x 12 Transmission Shown

1. Return from Trailer Brake Valve (where fitted)
2. Blocked Filter Vacuum Switch
3. Pressure Relief Valve
4. To Four Wheel Drive (where fitted)
5. To Electro Hydraulically Operated Differential Lock
6. Feed to Trailer Brake Valve (where fitted)

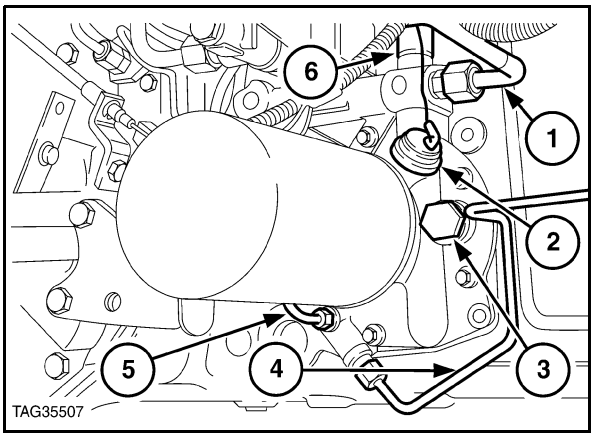

246

Disassembly

1. Remove pressure relief valve from pump. The relief valve is non adjustable and must be replaced if away from specification.

2. Remove pump drive gear (2), Figure 247. The gear is located on a tapered driveshaft and the use of a soft faced mallet will be required to loosen the gear from the shaft (1).

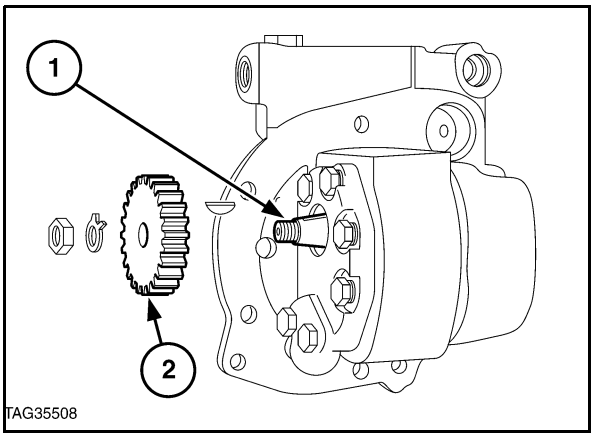

247

3. Remove the six pump body through bolts (4 short and 2 long).

4. Remove end cover (1) by easing the cover forward to clear locating dowels (3) and then tilting cover to clear transfer tube (2), Figure 248.

5. Remove the gears and bearing blocks from the hydraulic lift pump (front pump), Figure 250. To ensure correct re-assembly mark both the bearing blocks (1) and (3) and driven gear (2) on a non critical surface, Figure 249.

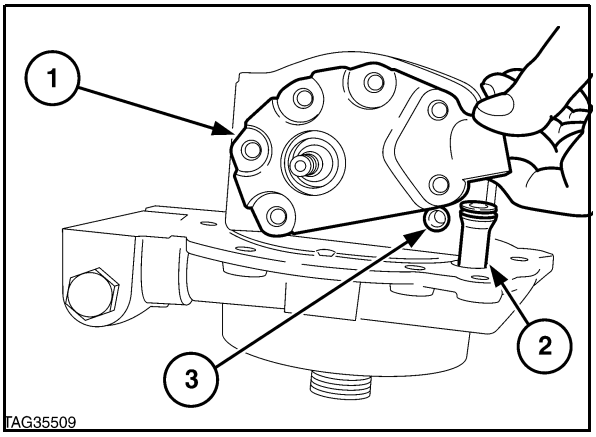

248

6. Layout the components in the order of disassembly, Figure 250. Refer to Figure 250 for location of the seals which are positioned between the sandwich plate and bearing block, item 3 in Figure 250.

NOTE: *The drive shaft and gear assembly is held together with an internal snap ring, DO NOT attempt to disassemble these parts as damage is likely to occur to snap ring and shafts.*

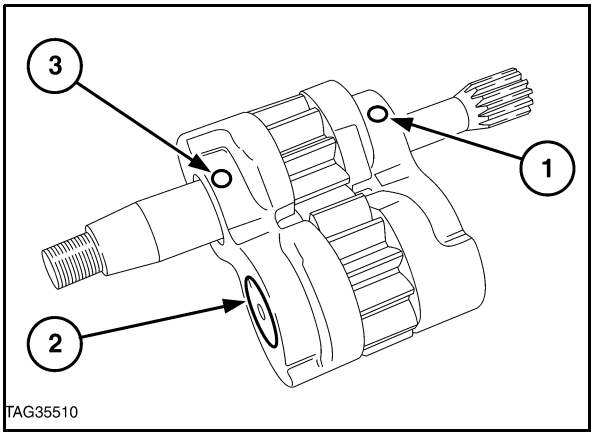

249

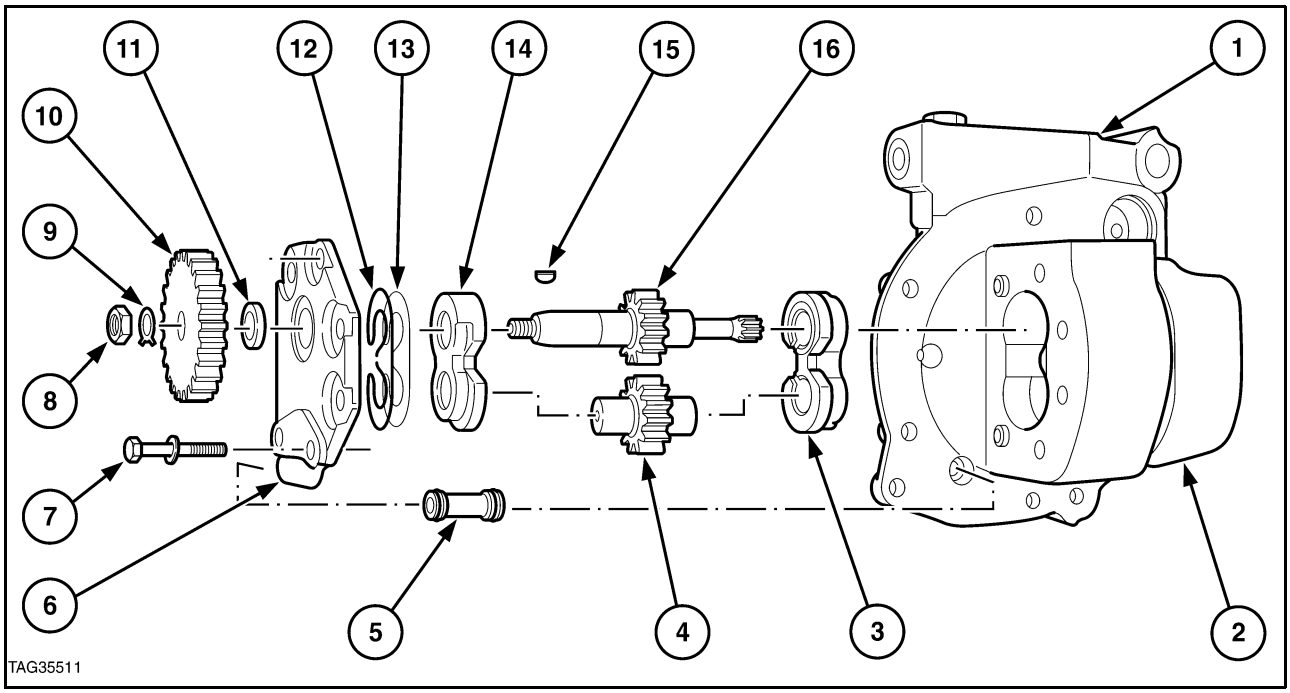

Hydraulic Lift Pump (Front Pump) – Exploded View 250

1. Pump Housing
2. Steering Pump
3. Bearing Block
4. Driven Gear
5. Transfer Tube
6. End Cover
7. Bolts (4 Long, 2 Short)
8. Nut
9. Locking Washer
10. Drive Gear
11. Oil Seal
12. Nylon Back–Up Ring
13. Seal
14. Bearing Block
15. Woodruff Key
16. Drive Shaft and Gear Assembly

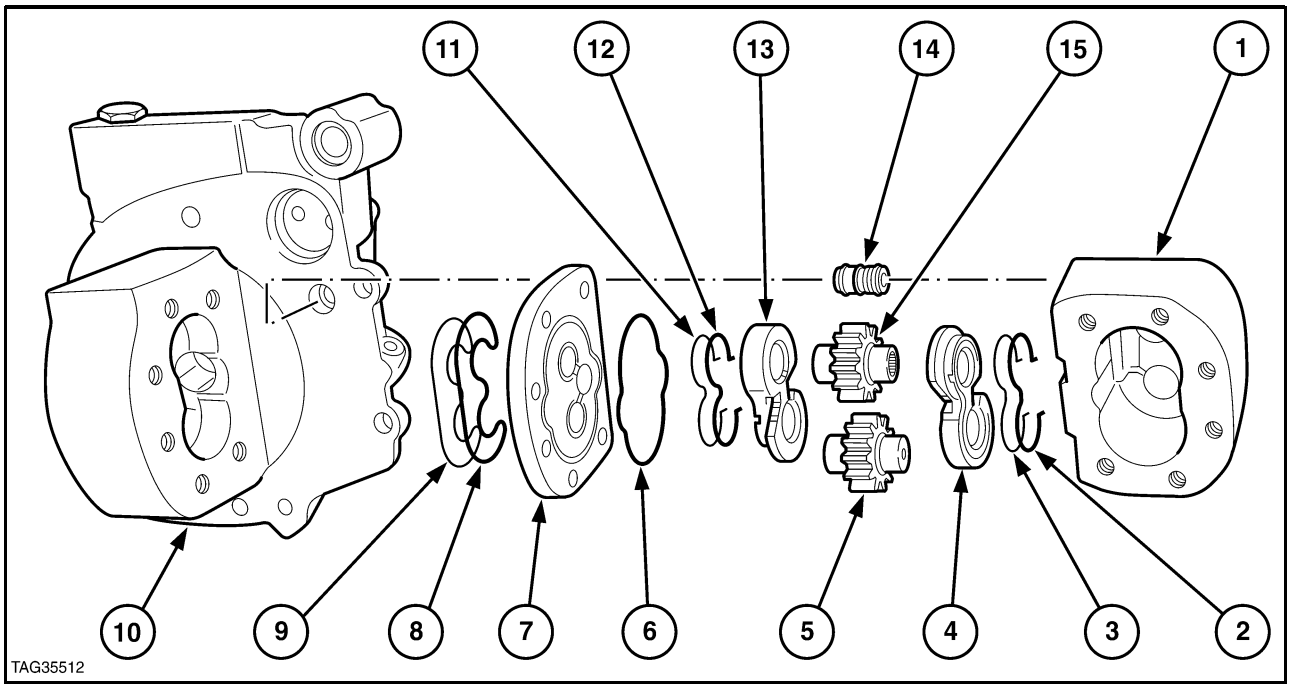

Steering Pump (Rear Pump) – Exploded View 251

1. Pump Body
2. Seal
3. Nylon Backing Strip
4. Bearing Block
5. Driven Gear
6. Seal
7. Sandwich Plate
8. Seal
9. Nylon Back–Up Ring
10. Pump Housing
11. Seal
12. Nylon Backing Strip
13. Bearing Block
14. Transfer Tube and Snap Ring
15. Drive Gear

7. Pull the steering pump (rear pump) assembly from the pump housing and separate the components, taking care to identify the orientation of the gears and bearing blocks, Figure 251.

NOTE: *A small mark on the end face of the driven gear will assist in identification to ensure correct re-assembly.*

Inspection and Repair

1. Wash all components in a suitable solvent and allow to dry.

2. Examine each bearing block thoroughly. At major overhauls, both bearing blocks and gears should be renewed using the service repair kit. These items are not serviced separately.

3. Check bushes in bearing blocks for wear and ensure the lubrication scrolls in the bushes are free from obstruction.

4. Inspect the pump gears for wear or damage, paying attention to the bearing journals, gear teeth and side facings. To ensure maximum pump efficiency, the width of each pair of pump gears must be within 0.0002 in. (0.005 mm) of each other and the gear journals within 0.0005 in. (0.013 mm).

5. Light score marks on the gear facing areas can be removed using a sheet of '0' grade wet or dry abrasive paper lubricated with paraffin on a true flat surface. Polish the affected face using light pressure in a rotating motion. Journals may be polished to achieve free movement in the body.

6. Inspect the track cut by the gear teeth in the pump body. It is normal to see a gear track cut in the suction side of the pump body, this is made during the bedding in process by the pump manufacturer. The gear track must not however, exceed 0.004 in. (0.10 mm) depth or continue beyond the suction half of the gear aperture. A gear track beyond this specification will necessitate the installation of a new pump.

Re-Assembly

Re-assembly follows the disassembly procedure in reverse.

During re-assembly, observe the following requirements:-

- If the end cover locating dowels have been removed, new dowels must be installed with 2.54mm of dowel protruding from the pump housing.

- Replace all oil seals and 'O' rings as provided in the seal kit.

- Install washers (1) and (5) and 'O' ring seals (2) and (4) to transfer tubes (3). Refer to Figure 252 for typical seal installation.
- Coat all seals and 'O' rings with petroleum jelly and ensure all seals and backing strips are correctly positioned.
- Lubricate all parts with Ambra Multi-G hydraulic oil.
- To maintain pump efficiency it is imperative that original gears and bearings are re-assembled exactly as removed.

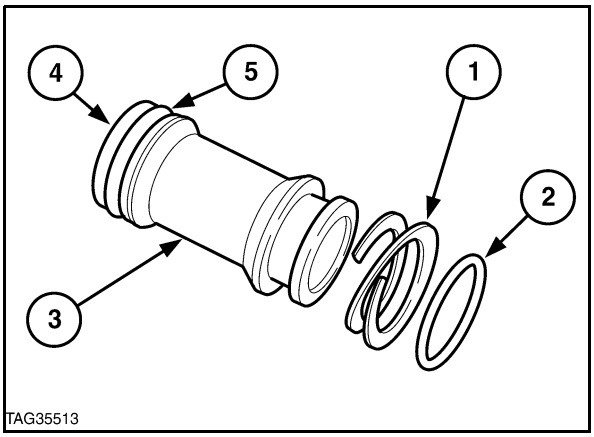

252

The bearing block, item 4 in Figure 251, is manufactured with a radiused edge. During re-assembly ensure that the **'radiused edge'** is installed at the bottom of the steering pump body bore, Figure 253.

NOTE: *Only one of the two bearing blocks used in the steering pump is radiused on the corner edge. Installation of the sharp edged radius block, item 13 in Figure 251, in this position will prevent correct assembly and cause damage to the pump.*

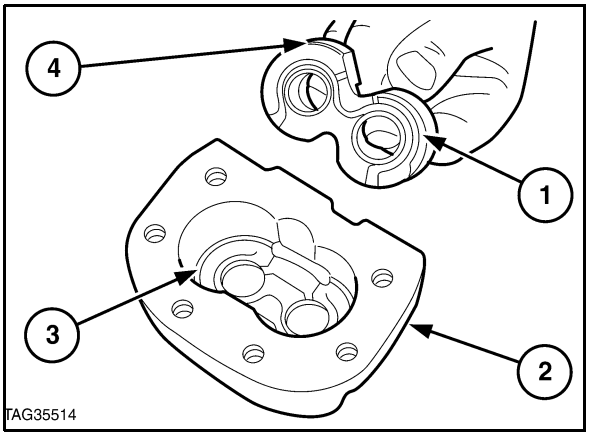

Bearing Block Installation 253

1. Relieved Edge
2. Steering Pump Body
3. Radiused Edge
4. Radiused Edge

- Pack the cavity behind the end cover input drive shaft seal with high melting point grease.
- The end cover bolts installed in the pump have different shanks or bolt length. Install the correct bolts in the locations shown in Figure 254 and tighten to a torque of 37-46 lbf ft (50-62 Nm).
- Tighten the pressure relief valve to a torque of 44-50 lbf ft (60-68 Nm).
- Tighten the input drive gear nut to a torque of 37-41 lbf ft (50-55 Nm) and ensure the tab on the locking washer is locked against the pump drive gear nut.
- If the pump is not for immediate use, cap all ports prior to storage.

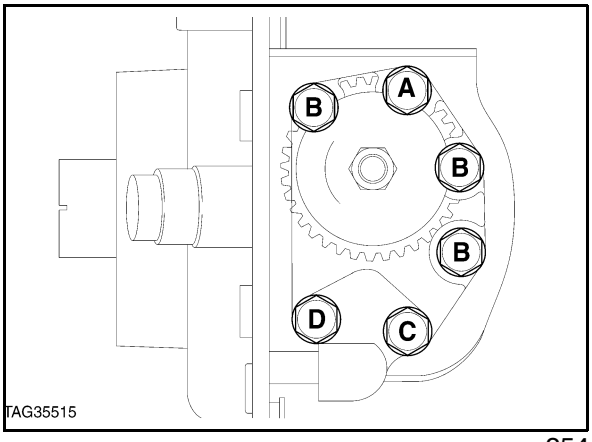

End Cover Bolt Location 254

B. Bolt M10 x 100 mm with Ground Shank
C. Bolt M10 x 100 mm with Dull Black Shank
D. Bolt M10 x 115 mm with Ground Shank
E. Bolt M10 x 115 mm with Dull Black Shank

Installation

Prior to installation introduce Ambra Multi-G hydraulic oil into the pump suction port and rotate the gears by hand.

Installation follows the removal procedure in reverse. During installation ensure the pump to transmission housing retaining bolts are tightened to a torque of 42-56 lbf ft (57-76 Nm).

Ensure all pipe connections are tightened to the correct torque, see Specifications.

ENGINE MOUNTED FIXED DISPLACEMENT GEAR TYPE PUMP - DESCRIPTION AND OPERATION

The Auxiliary engine mounted gear type pump, Figure 255, where installed, is fitted on the left hand front side of the engine and driven by the camshaft gear.

The optional engine mounted gear type pump can be installed on those tractors equipped with a transmission mounted gear type pump **and** remote control valves or auxiliary hydraulic equipment. The pump supplements the existing hydraulic oil supply provided by the transmission mounted gear type pump to the remote control valves and/or auxiliary equipment only.

If the **remote control valves** or **auxiliary equipment** require additional oil flow to that supplied by the main hydraulic pump, then oil from the auxiliary pump is directed to these circuits. Any output from the engine mounted pump that is surplus to requirements is returned to sump using the combining valve in the priority valve pack situated on top of the hydraulic lift cover. Refer to Chapter 4 for the description and operation of this valve.

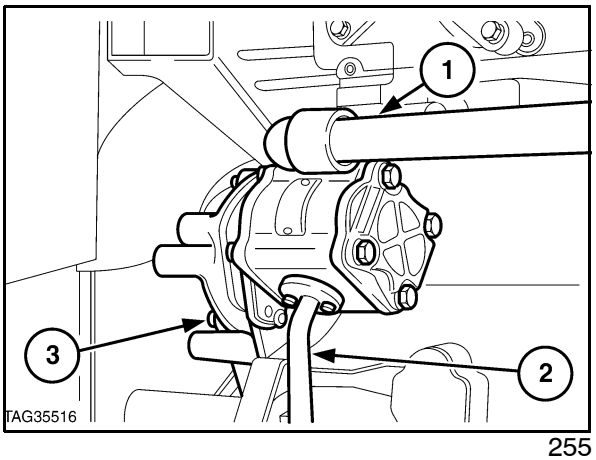

255

Hydraulic oil is drawn by the pump from the rear axle centre housing through an external pipe. An external pipe from the pump outlet port similarly directs the oil to the priority valve pack.

Before entering the pump the oil passes through a replaceable, full flow filter mounted on the left hand side of the rear axle centre housing, Figure 256.

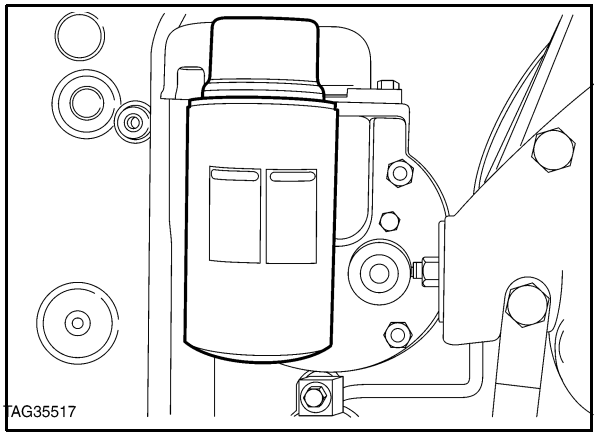

256

A cross section of the auxiliary engine mounted pump is shown in Figure 257. The pump contains one set of spur gears which constantly rotate drawing oil through the inlet port. Oil on entering the pump, fills the spaces between the teeth of each rotating gear. As the gears continue rotating the oil is trapped and carried between the teeth and the pump body to the outlet side of the pump where it is discharged to the hydraulic circuits through the pump outlet port.

The gears in the pumps are supported in aluminium bearings incorporating steel bushes with porous bronze and PTFE plus lead linings.

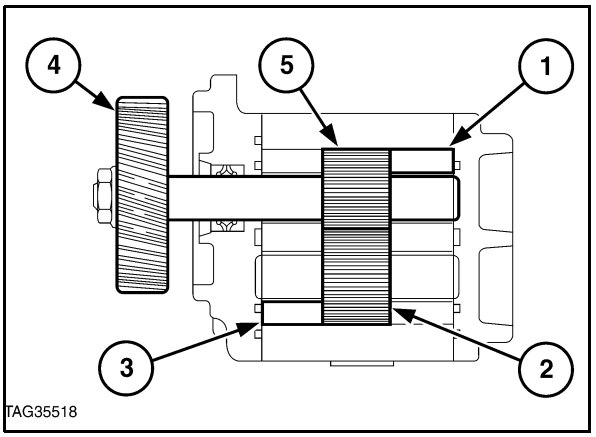

257

Auxiliary Engine Mounted Pump – Sectional View

1. Bearing Block
2. Driven Gear
3. Bearing Block
4. Pump Drive Gear
5. Drive Gear

ENGINE MOUNTED FIXED DISPLACEMENT GEAR TYPE PUMP - OVERHAUL

Removal

1. Remove inlet (1) and outlet (2) tubes to auxiliary pump, Figure 258.

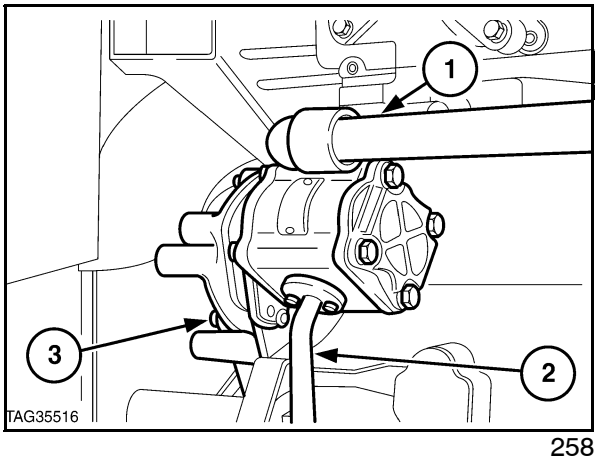

258

2. Remove retaining bolts (3), Figure 258 and lift pump from engine, Figure 259.

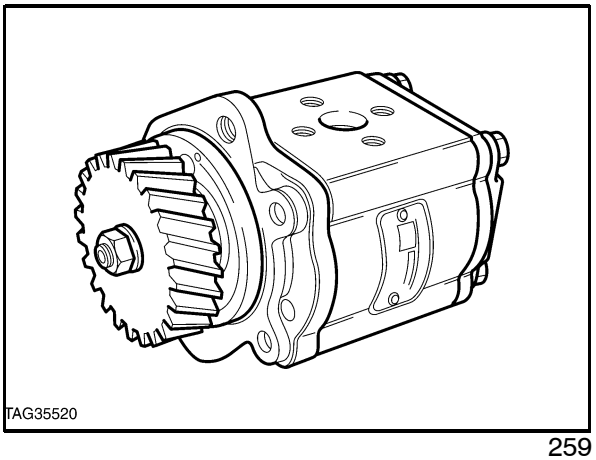

259

3. Remove pump drive gear (1), Figure 260. The gear is located on a tapered driveshaft and the use of a soft faced mallet will be required to loosen the gear from the shaft.

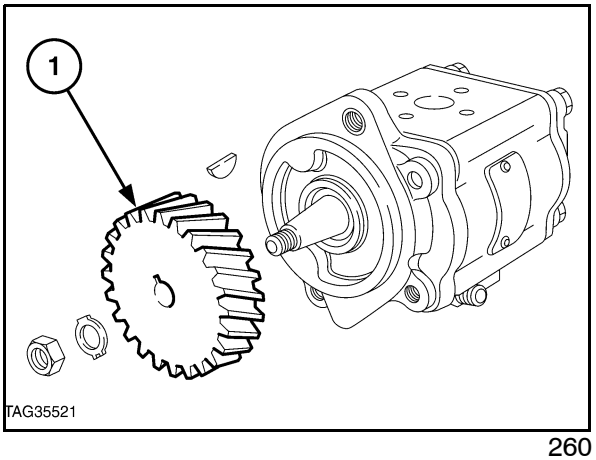

260

4. To ensure correct re-assembly observe the position of the 'IN' marking on the rear end cover (1), Figure 261.

5. Remove front and rear covers and withdraw the pump gears and bearing blocks. Refer to Figure 262. Take care to identify the orientation of the gears and bearing blocks.

NOTE: *A small mark on the end face of the driven gear will assist in identification to ensure correct re-assembly.*

6. Remove the seal in the front end cover.

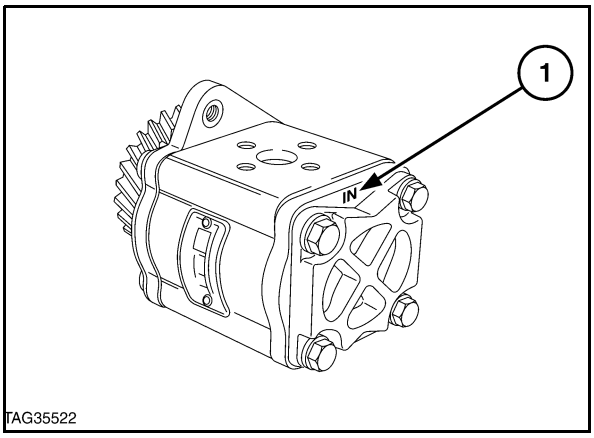

261

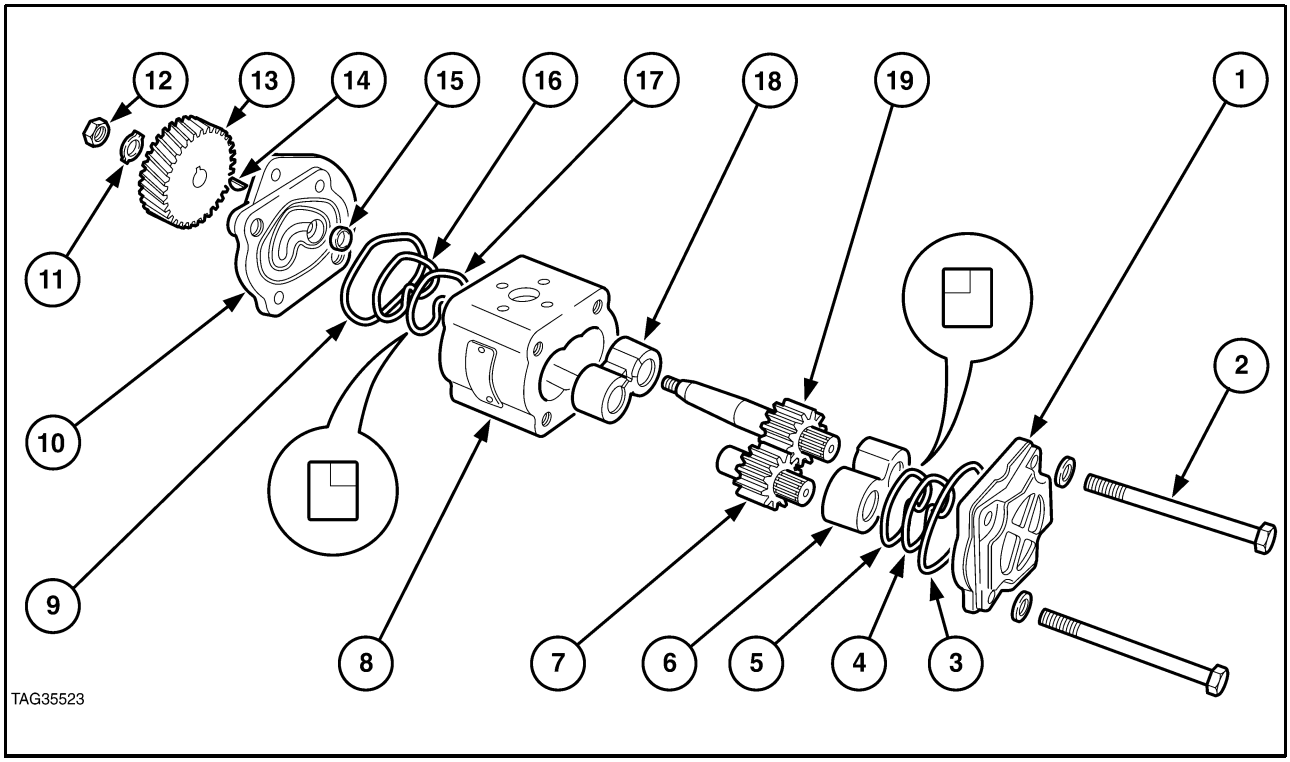

Auxiliary Pump Gears–Exploded View 262

1. Rear End Cover
2. Through Bolts (4 off)
3. Seal
4. Nylon Back-up Ring
5. Seal
6. Bearing Block
7. Driven Gear
8. Pump Body
9. Seal
10. Front End Cover
11. Tab Washer
12. Nut
13. Pump Drive Gear
14. Woodruff Key
15. Seal
16. Nylon Back-up Ring
17. Seal
18. Bearing Block
19. Driveshaft and Gear

Inspection and Repair

1. Wash all components in a suitable solvent and allow to dry.

2. Examine each bearing block thoroughly for damage or wear. At major overhauls the bearing blocks should be renewed.

3. Inspect the pump gears for wear or damage, paying attention to the bearing journals, gear teeth and side facings. To ensure maximum pump efficiency the width of the pair of gears must be within 0.0002 in. (0.005 mm) of each other and the gear journals within 0.0005 in. (0.013 mm).

4. Light score marks on the gear facing areas can be removed using a sheet of '0' grade wet or dry abrasive paper lubricated with paraffin on a true flat surface. Polish the affected face using light pressure in a rotating motion. Journals may be polished to achieve free movement in the body.

5. Inspect the track cut by the gear teeth in the pump body. It is normal to see a gear track cut in the suction side of the pump body, this is made during the bedding in process by the pump manufacturer. The gear track must not, however, exceed 0.004 in. (0.10 mm) depth or continue beyond the suction half of the gear aperture. A gear track beyond this specification will necessitate the installation of a new pump.

Re-assembly

Re-assembly follows the disassembly procedure in reverse.

During re-assembly, observe the following requirements.

- Replace all oil seals.

- Coat all seals and 'O' rings with petroleum jelly and ensure all seals and back ups are correctly positioned.

- Lubricate all parts with Ambra Multi-G hydraulic oil.

- To maintain pump efficiency it is imperative that original gears and bearings are re-assembled exactly as removed during disassembly. The bearing blocks are installed with their recess against the gear faces and the relieved radiused edges towards the outlet side of the pump.

- Pack the cavity behind the lips of the front end cover drive shaft seal with high melting point grease.

- Tighten the end cover clamping bolts to a torque of 45-50 lbf ft (61-68 Nm) after lightly lubricating them.

- Tighten the drive gear retaining nut to a torque of 30-33 lbf ft (40-45 Nm) and ensure the tab on the locking washer is locked against the nut.

- If the pump is not for immediate use, cap all ports prior to storage.

Installation

Installation follows the removal procedure in reverse.

Prior to installation on the tractor introduce hydraulic oil into the suction port and rotate the gears by hand.

During installation ensure the pump retaining bolts are tightened to a torque of 42-56 lbf ft (57-76 Nm).

Tighten the inlet pipe retaining bolts to a torque of 11-15 lbf ft (15-20 Nm).

Tighten the pump outlet pipe retaining screws to a torque of 5-7 lbf ft (7-10 Nm).

PRESSURE TESTING

The following test procedure must be used to confirm the efficiency and output of the fixed displacement tandem gear type and auxiliary engine mounted pumps installed on Series 40 Tractors. The pressure and flow values quoted in this text are the minimum acceptable before overhaul is required and also make allowances for back pressure in the system. The values quoted in the Specifications Section , are for new components.

If the efficiency of the pump(s) is verified and the hydraulic lift, remote valves, PTO or other hydraulically operated systems are not operating correctly, reference must be made to the appropriate Parts/Chapters in the Repair Manual which describe the fault finding, overhaul and pressure testing of these components.

WARNING: *To prevent inadvertent movement of the tractor during pressure testing the following precautions must be taken:-*

- *Ensure the gear shift levers are in the neutral position.*
- *If the tractor is fitted with four wheel drive, disconnect the driveshaft coupling at the front axle pinion.*

IMPORTANT: *Before performing any flow or pressure checks it is important that the oil in the rear axle and transmission is at an operating temperature of 75°C (170°F). This can be achieved by installing the flowmeter as for flow testing the hydraulic pump and performing steps 7 and 8 of the main hydraulic pump flow test.*

Main Hydraulic Pump Flow and Pressure Test

1. Tractors With Trailer Brake Only:
   Disconnect trailer brake valve feed tube (1) from pump, Figure 263.

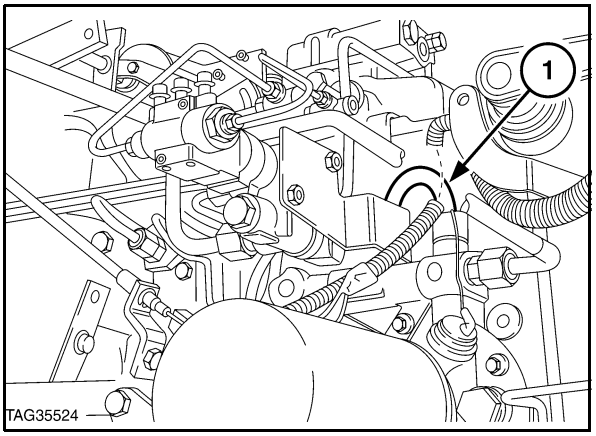

263

2. Tractors Less Trailer Brake Only:
   Remove plug (1) from pump outlet port, Figure 264.

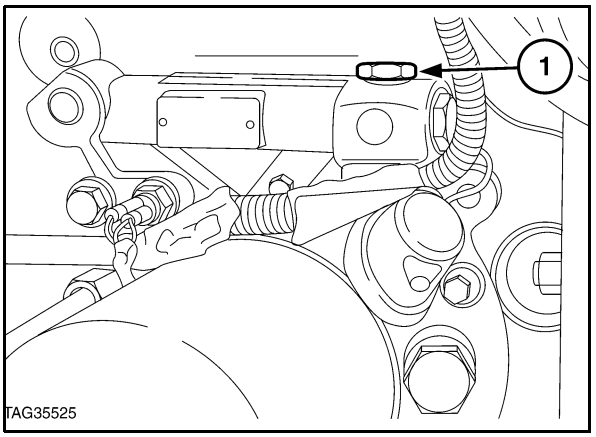

264

3. Install trailer brake valve adaptor (1) Part No. 81862770, Figure 265 into pump port.

   On tractors with trailer brakes the adaptor is already fitted to the pump.

Trailer Brake Valve Adaptor

1. Adaptor Part No 81862770
2. 'O' Ring Part No 83999938
3. 'O' Ring Part No 83416161
4. 'O' Ring Part No 83416165

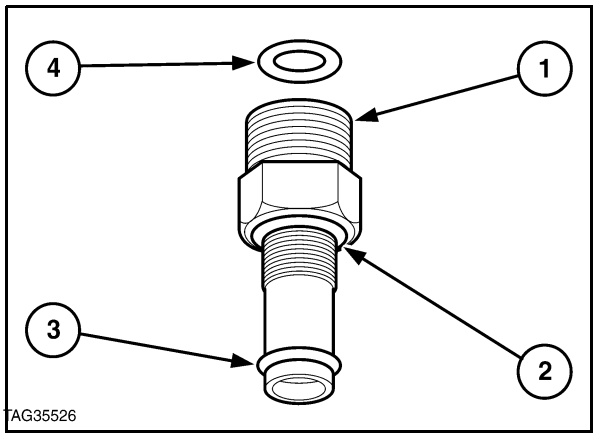

265

4. Attach inlet hose (3) of flowmeter to pump outlet port via adaptors 4FT858/1, (4) adaptor 4FT858, (5), and trailer brake adaptor, (6), and return hose (1) into a remote valve raise port, Figure 266.

Adaptor 4FT.858/1 (4) is provided with a $^{3}/_{4}$ in JIC male fitting. If the hoses on the flowmeter used are not compatible with this size fitting a suitable adaptor with a 1 in–14 UNS 'O' ring face seal thread for attaching onto the pump test port is required.

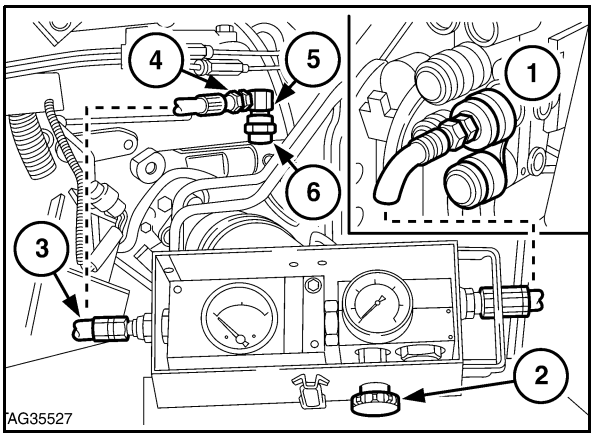

266

5. Set remote valve receiving oil from flowmeter to 'float', Figure 267.
6. Ensure load valve (2), Figure 266 on flowmeter is fully open.
7. Blank oil cooler with a piece of card. Start engine and set speed to 2100 rev/min.
8. Slowly close load valve until a pressure of 2000 lbf/in^2 (137 bar) is recorded on the flowmeter pressure gauge. Run tractor until the oil is at an operating temperature of 75°C (170°F).

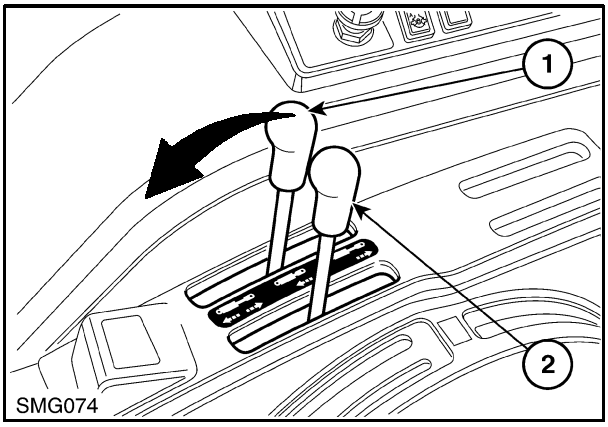

267

9. Slowly close the load valve on the flow meter until the pressure relief valve starts to operate and the pressure gauge reading on the flowmeter no longer increases. Record the maximum pressure reading. The pressure recorded should be between 2550–2650 lbf/in^2 (176–183 bar).
10. If the recorded pressure was away from specification replace the pump pressure relief valve and re–check the pressure.
11. If the relief valve pressure is to specification, open the load valve on the flowmeter until a pressure of 2000 lbf/in^2 (176–182 bar) is obtained and record the pump flow.

The minimum flow recorded should be 8.4 U.S. Gals/min(7.0 Imp Gals/min, 34 Ltrs/min). If the flow is less than this value the pump must be overhauled.

Main Hydraulic Pump Pressure Test

If a flowmeter is not readily available the maximum pump pressure can be checked by installing a 0–6000 lbf/in^2 pressure gauge in place off the flowmeter, Figure 268.

Alternatively if the tractor **is not** fitted with an auxiliary engine mounted hydraulic pump the pressure gauge can be installed directly into a remote valve. Operation of the valve will then give pump pressure.

1. Start tractor and set engine speed to 2100 rev/min. Observe reading on pressure gauge.

2. Reduce the engine speed to 1200 rev/min and again observe the pressure reading.

If the readings remain within the 2550–2650 lbf/in^2 (176–183 bar) pressure specification it is an indication that the pump **does not** require an overhaul.

Trailer Brake Valve Pressure Test

If the tractor is installed with trailer brakes and the main hydraulic pump pressure and flow test is satisfactory, but the hydraulic lift only operates slowly, perform the following trailer brake valve test to determine if the concern is related to the trailer brake valve or the hydraulic lift.

1. Connect 0–6000 lbf/in^2 (0–414 bar) pressure gauge FT.8503A to trailer brake coupler, Figure 269.

2. Set engine speed to 1500 rev/min.

3. Depress right hand brake pedal. There should be no reading on the pressure gauge.

4. Depress left hand brake pedal. There should be no reading on the pressure gauge.

5. Couple together and depress both brake pedals. The reading on the pressure gauge should increase as the brake pedals are depressed harder. The pressure recorded, depending on pedal effort, should increase up to a maximum pressure of 2140 lbf/in^2 (147 bar).

6. Release brake pedals. Pressure should reduce to zero.

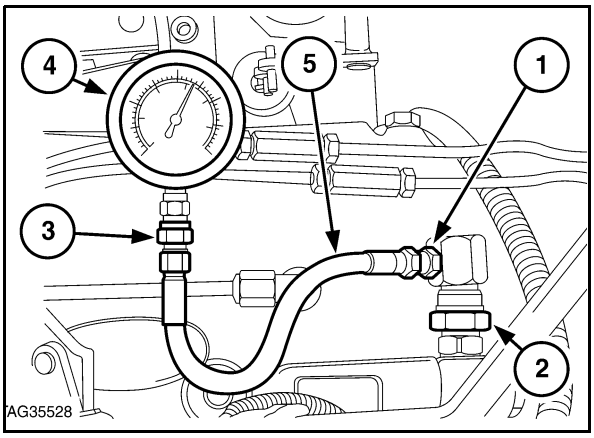

Checking Main Hydraulic Pump Pressure 268

1. Adaptor 4FT. 858/2
2. Adaptor 4FT. 858
3. Adaptor FT.8503–8 or FNH 00705
4. Pressure Gauge FT.8503A
5. Test Hose Part No. 83936707

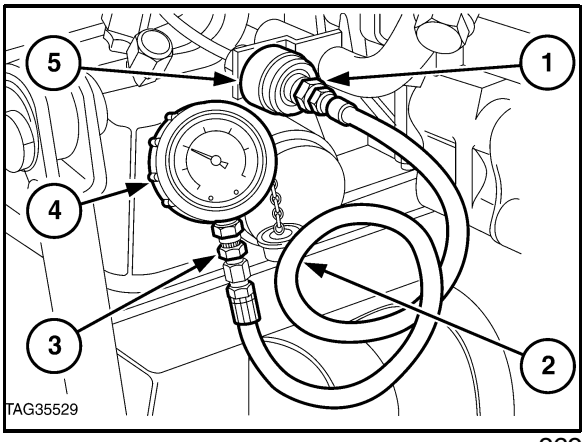

Trailer Brake Pressure Test 269

1. Adaptor 4FT.854
2. Test Hose Part No. 83936707
3. Adaptor FT. 8503–8 or FNH 00705
4. Pressure Gauge FT.8503A
5. Trailer Brake Coupler

Steering Pump

The following practical test will determine if the steering pump outlet is sufficient to allow satisfactory operation of the steering system.

Steering Test

1. Set engine speed to 1000 rev/min.
2. Turn steering quickly from lock to lock. If steering is operating correctly the reaction of the steering should be immediate, with no time delay between turning the steering wheel and movement of the wheels. At full lock the relief valve in the steering motor should be heard to blow and the engine speed drop to approximately 970 rev/min.

Steering Relief Valve Pressure Test

IMPORTANT: *There is no relief valve in the steering pump and the following pressure test must only be performed as specified below. Failure to observe this precaution may result in severe damage to the steering pump.*

1. Turn steering onto full left hand lock.
2. Disconnect the left hand turn feed hose at the steering cylinder.
3. Install a 0-6000 lbf/in2 pressure gauge FT. 8503A, item (1), Figure 270, using adaptor FT8503-8, item (2) Figure 270 and a locally procured 7/16 JIC male adaptor, item (3), Figure 270.
4. Start tractor and set engine speed to 2100 rev/min.
5. Using a force of approximately 5 lbf. hold steering wheel on full left hand lock and observe the pressure reading. The use of a force greater than 5 lbf. at the rim of the steering wheel may lead to slightly inaccurate readings due to the pumping action of the hydrostatic steering motor.
6. Reduce the engine speed to 1200 rev/min and again observe the pressure reading.

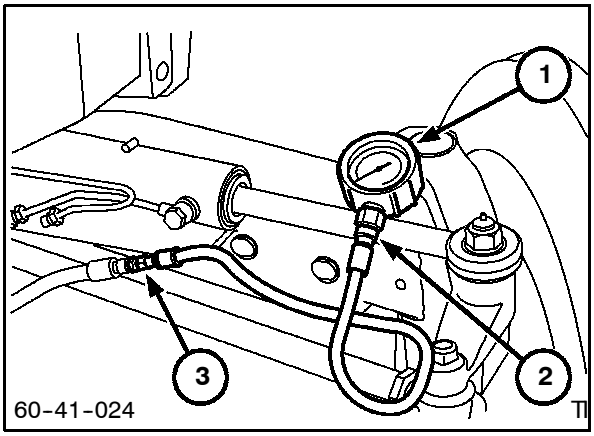

270

The pressure readings after taking into consideration system back pressure should be:-

2220-2370 lbf/in^2 (153-163 bar). - Two wheel drive tractors.

2620-2770 lbf/in^2 (180-191 bar). - Four wheel drive tractors.

If the steering test was satisfactory but the pressure readings are away from specification, the relief valve in the steering motor must be replaced. Refer to Section 41 "Steering".

Steering Pump Flow Test

1. Disconnect feed (1) and return (2) tubes to steering motor, Figure 271.

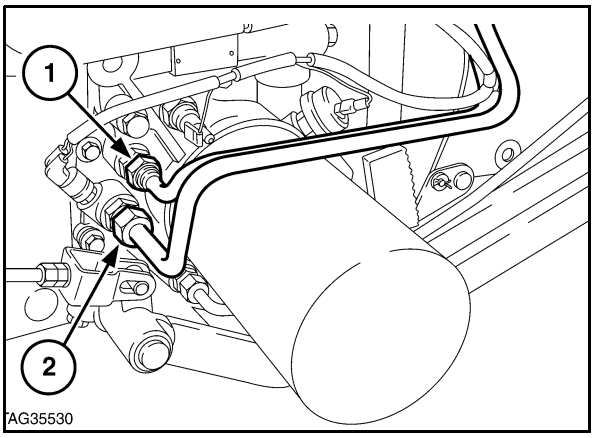

271

2. Install flowmeter, Figure 272.

NOTE: *The flowmeter used for this test must be capable of withstanding a back pressure off 300 lbf/in^2 (21 bar).*

If hoses of a different size are used with the flowmeter, suitable adaptors with a female thread size of $^{13}/_{16}$ in–16 ORFS for installing onto the pump inlet and outlet ports will be required.

3. **'Ensure'** flowmeter load valve (1) is fully open.

IMPORTANT: *If the flowmeter load valve remains closed damage will occur to the steering pump.*

4. Set engine speed to 2100 rev/min and slowly close the load valve until a pressure of 2000 lbf/in^2 (138 bar) is recorded on the flowmeter pressure gauge. **DO NOT** increase the pump pressure beyond this value.

5. Record the pump flow.

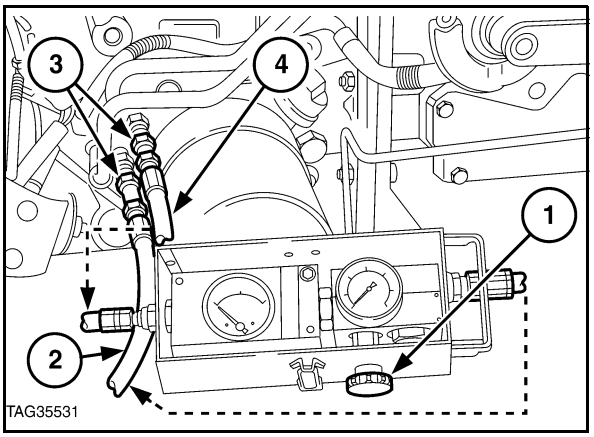

Installation of Flowmeter for Steering Pump Flow Test

272

1. Flowmeter Load Valve
2. Return Hose from Flowmeter
3. Adaptors 4FT.859
4. Inlet Hose to Flowmeter

If pump flow is less than 6.8 Imp gals/min (8.2 U.S. Gals/min 31 Ltrs/min) the steering pump requires overhaul.

Low and Lubrication Circuit Pressure Tests

It is important that the flow of oil on returning from the steering motor to the tandem pump for redistribution to the low pressure and lubrication circuits, is regulated to the correct specification by the pressure regulating valve and lubrication circuit relief valve in the PTO assembly. It is, therefore, recommended that when pressure testing the pump the following low and lubrication circuit pressure tests are performed.

Low Pressure Circuit Test

1. Remove the pressure switch (1) for the low pressure hydraulic circuit, Figure 273.

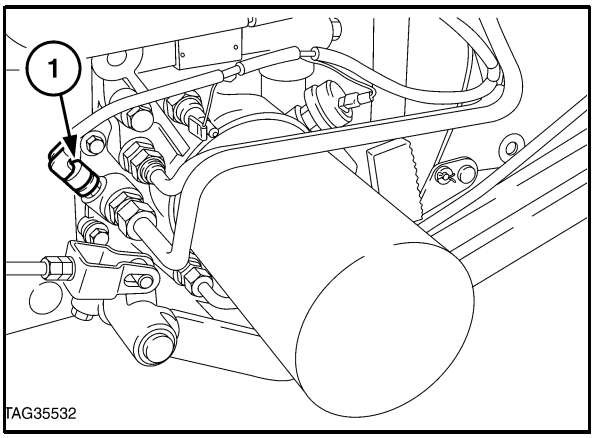

273

2. Install 0-400 lbf/in^2 (0-30 bar) pressure gauge, FT.8616, Figure 274.

3. Set engine speed to 2100 rev/min and observe pressure reading. A reading of 220-260 lbf/in^2 (15.2-17.9 bar) should be recorded.

Checking Low Pressure Circuit

1. Pressure Gauge FT.8616 or FNH 06653
2. Adaptor FT.8503-8 or FNH 00705
3. Test Hoses Part Nos. 83936707 and 83926717

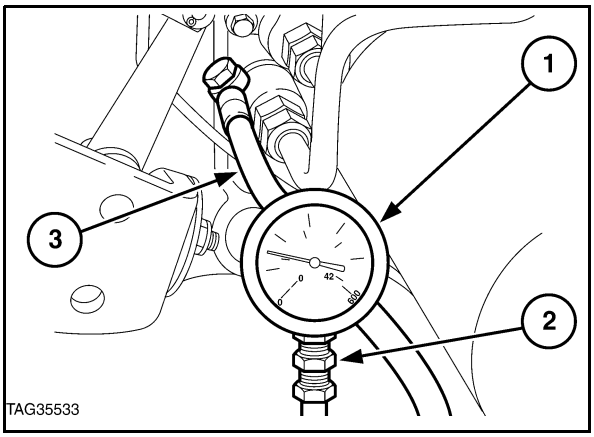

274

Lubrication Circuit Pressure Test
Tractors with 12 x 12 Transmission only:

1. Carefully disconnect feed and return tubes to cooler by-pass valve and using Adaptors 4FT.852 install flowmeter, Figure 275. Take care not to damage tubes during disconnection.

NOTE: *Adaptors 4FT.852 are suitable for installing $^3/_4$ in JIC hoses to flowmeter. If hoses of a different size are used with the flowmeter, suitable adaptors with a female thread size of $^3/_4$ in-18 UNS on one end will be required.*

2. **'Ensure'** flowmeter load valve is fully open.

3. Set engine speed to 2100 rev/min and slowly close the flowmeter load valve. Record the pressure on the flowmeter gauge and then **fully open** the load valve.

IMPORTANT: *If the flowmeter load valve remains closed the low pressure lubrication supply to the transmission shafts will cease with possible damage to the transmission.*

Depending on engine speed, the pressure should be 73-123 lbf/in^2 (5.0-8.5 bar). 73 lbf/in^2 (5.0 bar) is the minimum operating pressure of the lubrication circuit relief valve, located in the PTO valve and clutch assembly.

Lubrication Circuit Pressure Test:
Tractors with 16 x 4 or 8 x 2 Transmission only:

NOTE: *The use of this method to test lubrication circuit pressure on tractors installed with 12 x 12 transmissions may result in the readings being influenced by the cooler by-pass valve installed on 12 x 12 transmission tractors. This would be particularly evident if the oil temperature was below* 75°C (170°F).

1. Operate the tractor and set the engine speed to 1000 rev/min. Stop the engine but do not re-adjust the throttle.

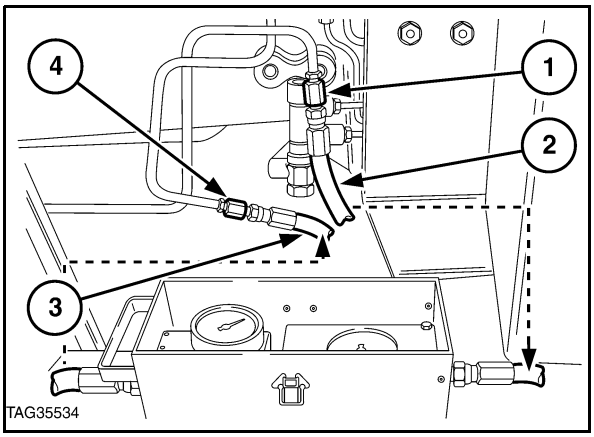

Flow Testing Steering Pump 275

1. Adaptor 4FT. 852
2. Supply Hose To Flowmeter
3. Flowmeter Return Hose
4. Adaptor 4FT. 852

2. Using test hose 83936707, adaptor FT.8503–8 and a suitable $^{7}/_{16}$ in JIC adaptor, which must be a tight fit inside the oil cooler inlet hose, connect the 0–400 lbf/in^2 pressure gauge FT.8616 to the cooler inlet hose, Figure 276.

3. Using an assistant to start the engine, observe the reading on the pressure gauge. **Do Not** run the tractor longer than is necessary to observe the pressure gauge reading.

The pressure recorded should be 73–123 lbf/in^2 (5.3–8.5 bar), depending on engine speed. 73 lbf/in^2 (5.3–8.5 bar) is the minimum operating pressure of the lubrication circuit relief valve located in the PTO valve and clutch assembly.

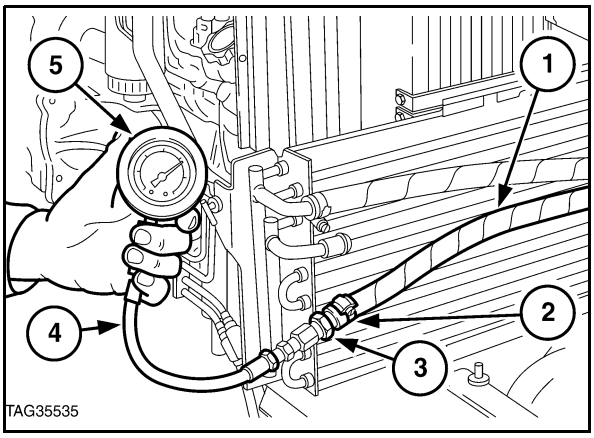

276

Lubrication Circuit Relief Valve Check
(Tractors with 16 x 4 or 8 x 2 Transmission)

1. Oil Cooler Inlet Hose
2. Hose Clamp
3. Suitable $^{7}/_{16}$ in JIC Adaptor to Connect Test Hose to Inlet Hose
4. Test Hose 83936707
5. Pressure Gauge FT.8616 or FNH 06653

Auxiliary Engine Mounted Pump Flow Test

NOTE: *The flowmeter used for this test must be capable of withstanding a back pressure of 300 lbf/in^2 (21 bar).*

Flow Test for Tractors with Auxiliary Services Control (ASC) Valve Option:

1. Install inlet hose (3) of flowmeter into lift coupler of right hand inner remote control valve and return hose (1) of flow meter into lift coupler of right hand outer remote control valve, Figure 277.

2. Set flow control knob (4) on remote control valves to minimum flow.

3. Ensure load valve (2) on flow meter is fully open.

4. Set engine speed to 2100 rev/min and lower lift arms.

5. Push green handled remote control valve operating lever (2) fully forward to 'float' position. (This lever operates the remote control valve receiving oil from the flow meter), Figure 278.

6. Pull blue handled remote control valve lever (1) fully rearwards to cylinder extend position. (This lever operates the remote control valve supplying oil to the flow meter).

7. Ensure that flow meter is measuring oil flow correctly then set remote control valve flow knobs to maximum flow.

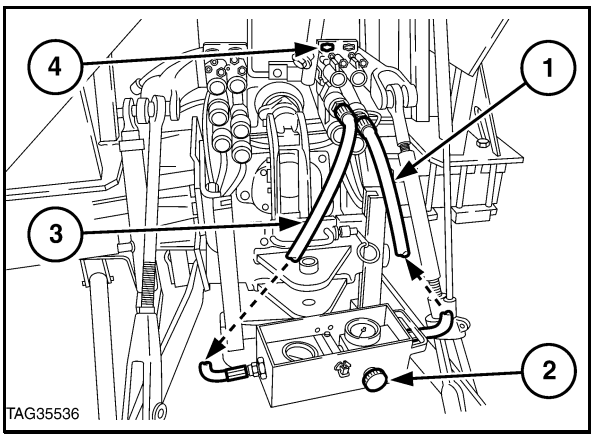

277

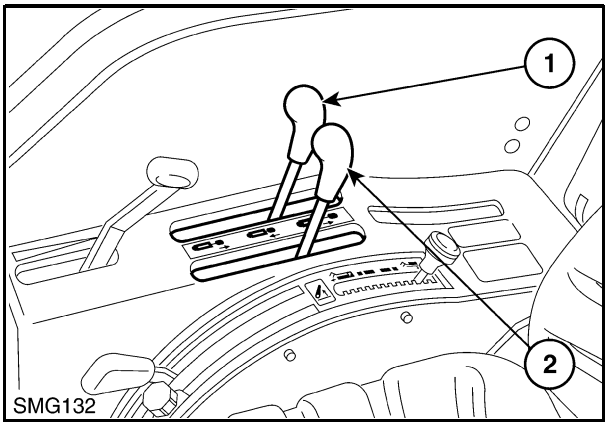

278

8. Turn auxiliary services control (ASC) to engaged position, Figure 279.

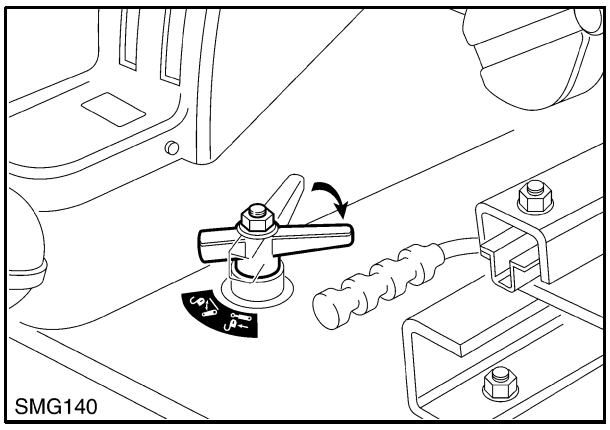

279

9. Move the hydraulic lift control lever to the fully raise position which will cause the pressure relief valve in the tandem pump to operate, diverting all the hydraulic lift pump oil to reservoir.

10. Adjust the load valve on the flow meter until a pressure of 2000 lbf/in^2 is obtained and record the pump flow. Move the lift control lever to the fully lowered position immediately the pump flow has been recorded.

The oil flow recorded is the output from the auxiliary engine mounted pump. If pump flow is less than 5.0 Imp gals/min (6 U.S. Gals/min 23 Ltrs/min) the pump must be overhauled.

11. Slowly close the load valve until the flowmeter pressure gauge no longer increases.

Record this value which should be in the range 2550–2900 lbf/in2 (176–200 bar). This is the operating pressure of the combining valve relief valve, in the priority valve pack on top of the hydraulic lift cover. If this pressure is low, overhaul the priority valve pack as described in Chapter 4 of this Part of the Repair Manual, before investigating further concerns with the auxiliary engine mounted pump.

Flow Test for Tractors Not Installed with ASC Valve Option:

1. Remove pressure relief valve from pump (1), Figure 280. Install plug Part No. 83900652 and seal Part No.81800812 in place of valve.
   This will return all oil from the hydraulic lift pump to the reservoir.

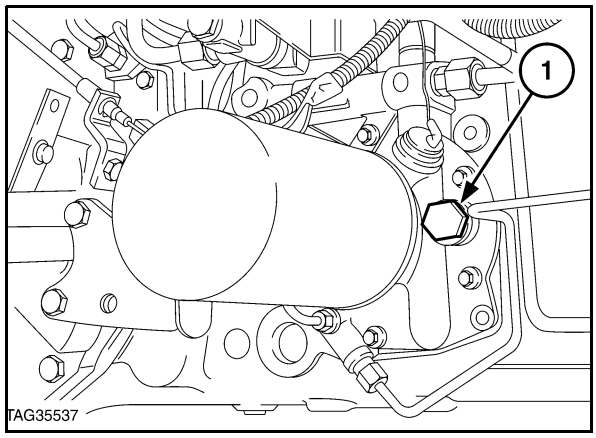

280

2. Install inlet hose (3) of flowmeter into lift coupler of right hand inner remote control valve and return hose (1) of flow meter into lift coupler of right hand outer remote control valve, Figure 281.

3. Set flow control knob (4) on remote control valves to minimum flow.

4. Ensure load valve on flow meter is fully open.

5. Set engine speed to 2100 rev/min.

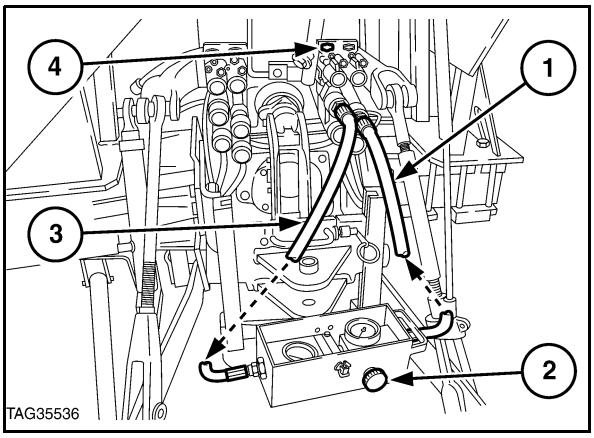

281

6. Push green handled remote control valve operating lever (2) fully forward to 'float' position. (This lever operates the remote control valve receiving oil from the flow meter), Figure 282.

7. Pull blue handled remote control valve lever (1) fully rearwards to cylinder extend position. (This lever operates the remote control valve supplying oil to the flow meter).

8. Ensure that flow meter is measuring oil flow correctly then set remote control valve flow knobs to maximum flow.

9. Adjust the load valve on the flow meter until a pressure of 2000 lbf/in^2 (138 bar) is obtained and record the pump flow.

   If pump flow is less than 5.0 Imp gals/min (6 U.S. Gals/min 23 Ltrs/min) the pump must be overhauled.

10. Slowly close the load valve until the reading on the flowmeter pressure gauge no longer increases.

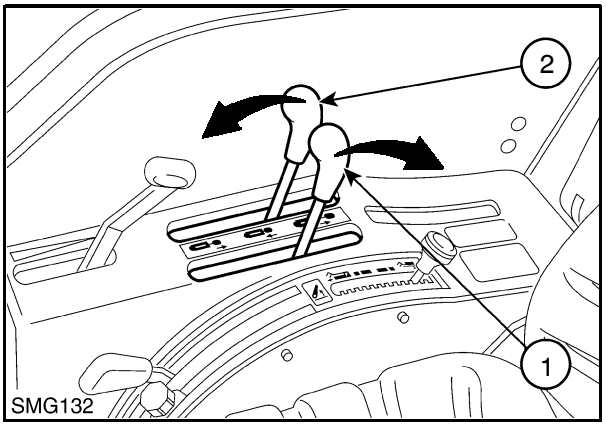

282

Record this value which should be in the range 2550–2900 lbf/in2 (176–200 bar). This is the operating pressure of the combining valve relief valve, in the priority valve pack on top of the hydraulic lift cover. If this pressure is low, overhaul the priority valve pack as described in Chapter 4 of this Part of the Repair Manual, before investigating further concerns with the auxiliary engine mounted pump.

11. Remove plug from pump and re–install the pressure relief valve.

HYDRAULIC TRAILER BRAKES

SPECIFICATIONS AND SPECIAL TOOLS

Maximum Trailer Brake Pressure	1740–2176 lbf/in^2 (120–150 bar)
Brake Reservoir Oil	New Holland Specification Mineral Oil

TORQUES

= **Nm**
= **lbf ft**

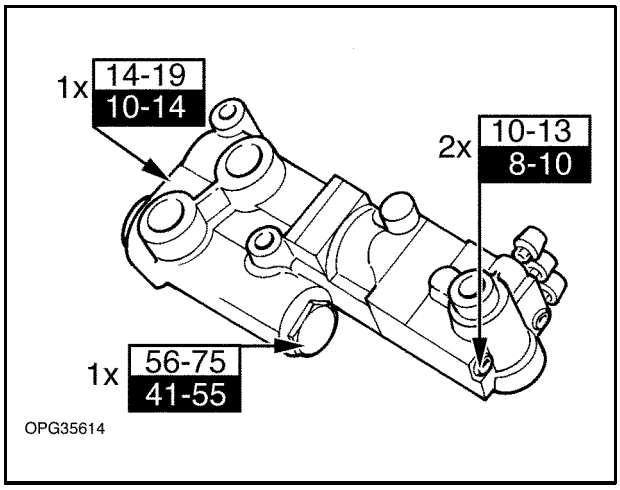

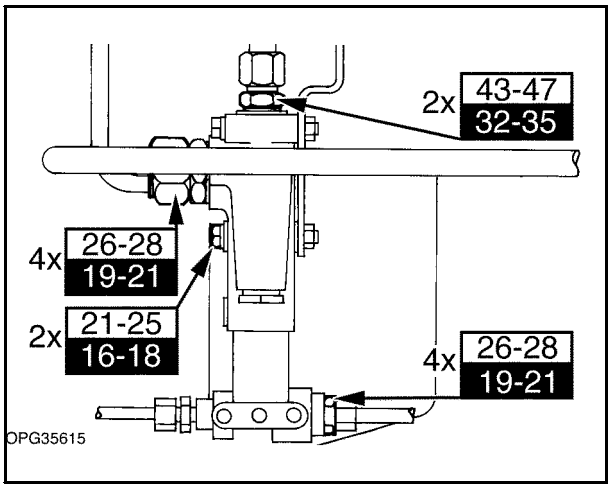

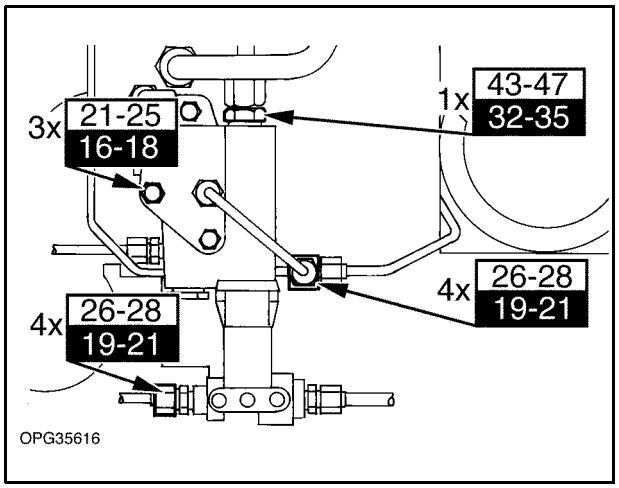

SPECIAL TOOLS

DESCRIPTION	TOOL NUMBER	
	V.L. Churchill	**FNH Part No**
Adaptor Trailer Brake Coupling to Test Hose	4FT.854	
Test Hose–Pressure Testing (From NH Logistics)		83936707
Pressure Gauge 0–6000 lbf/in^2 (0–414 bar)	FT.8503A	FNH 02028
Adaptor–Pressure Gauge to Test Hose	FT.8503–8	FNH 0705

DESCRIPTION AND OPERATION

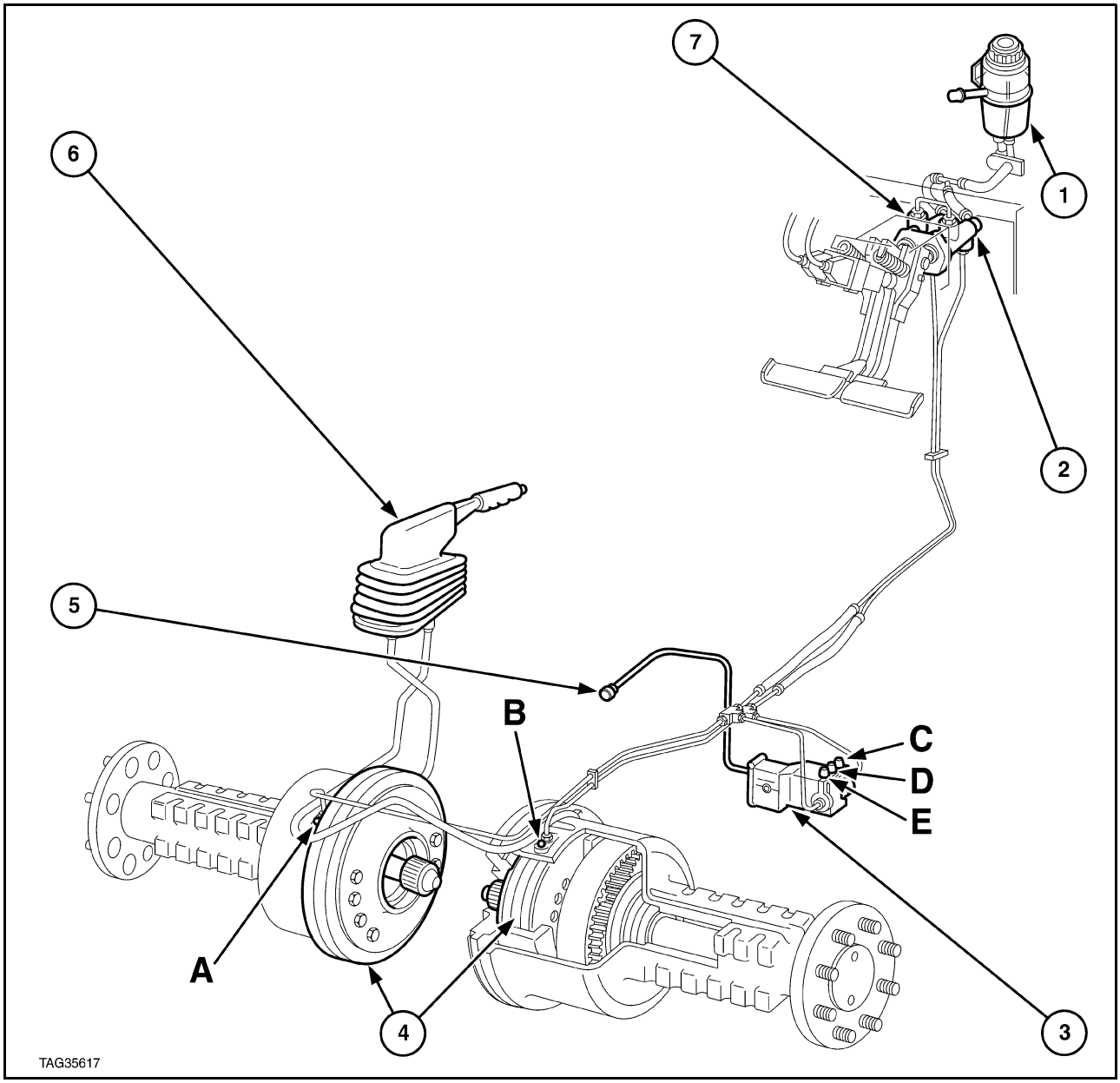

Tractor and Trailer Brake Layout

283

1. Tractor Brake Fluid Reservoir
2. Tractor Right Hand Brake Master Cylinder
3. Trailer Brake Valve
4. Rear Axle Wet Disc Brakes
5. Trailer Brake Line Coupler
6. Handbrake
7. Tractor Left Hand Brake Master Cylinder

A. Bleed Screw–Left Hand Brake
B. Bleed Screw–Right Hand Brake
C. Bleed Screw–Right Hand Brake Sensing Line
D. Bleed Screw–Trailer Brake Valve Pilot Head
E. Bleed Screw–Left Hand Brake Sensing Line

TS Series Tractors may be fitted with an hydraulic valve, for the control of hydraulically operated trailer brakes, Figure 283.

Unlike the main tractor braking system, the trailer brakes use output from the main hydraulic pump controlled by the trailer brake valve, to apply the trailer brakes.

The trailer brake valve is connected in line between the main hydraulic pump and the tractor hydraulic circuits.

Sensing lines connected between each of the tractor brake lines and a pilot head on the trailer brake valve, activate the valve to direct oil supplied by the hydraulic pump to the trailer brakes, whenever both tractor brake pedals are depressed simultaneously.

The trailer brake valve is connected to the trailer brakes by means of tubing and a unique coupling which is to the ISO/DIS 5676 standard to prevent any coupling other than the appropriate type being connected.

The trailer braking system has priority over the tractor hydraulics circuits and does not affect the function of the hydraulic system. Similarly, the hydraulic lift, remote control valve and other hydraulic circuits do not interfere with the function of the trailer brakes.

The trailer braking is proportional to the effort applied on the tractor brake pedals. Feedback is provided by the trailer brake valve to give a sense of 'feel' to the operator which aids precise braking. The pilot head ensures trailer braking only occurs when both tractor brake pedals are depressed simultaneously.

The trailer braking system can be installed on tractors with either the fixed displacement gear type hydraulic pump, or the variable displacement hydraulic pump with closed centre load sensing.

On tractors installed with the fixed displacement gear type hydraulic pump, the valve (1) sits above the pump and is connected by metal tubing, Figure 284.

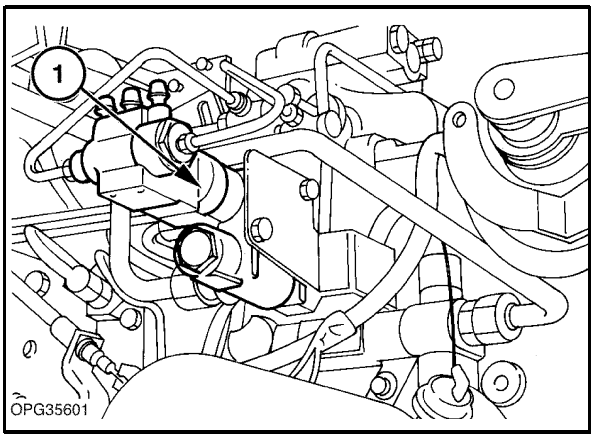

284

On tractors installed with the variable displacement hydraulic pump assembly with closed centre load sensing, the valve (2) attaches directly to the top of the pump, Figure 285.

The valve design for both types of installation are similar, however, the valve installed on tractors with variable displacement closed centre load sensing pump has a load sensing capability (1) to signal the pump when hydraulic demand by the trailer brakes is required. This facility is not required on tractors with the fixed displacement gear type pump.

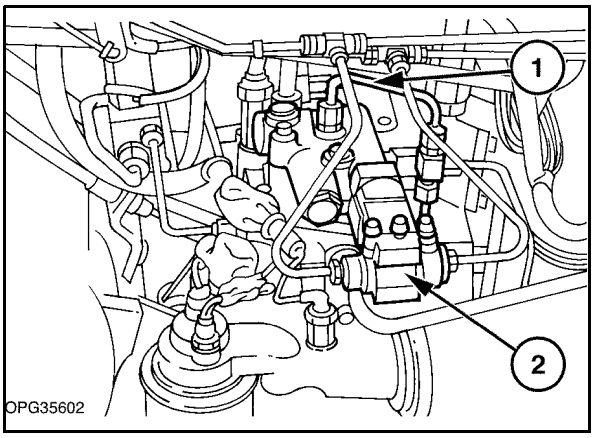

285

TRAILER BRAKE VALVE PILOT HEAD OPERATION

The pilot head on the trailer brake valve ensures that trailer braking only occurs when both tractor brake pedals are depressed simultaneously. This is achieved by ensuring that the pilot piston, housed within the head and which activates the trailer brake valve, only functions when both pedals are depressed.

Brakes Not Applied

When the tractor brakes are not applied pressure is not being applied to the pilot head sensing lines, Figure 286.

Single Pedal Brake Application

When a ‘single’ brake pedal is depressed, pressure is directed from the pressurised brake line to the trailer brake valve pilot head, Figure 287. The pressure applied through either Port ‘A’ or ‘B’, depending on whether the left or right hand pedal is depressed, causes the ball in the pressurised port to seat and the piston and plunger to move forward, pushing the opposite piston off its seat. Because the ball in the pressurised port is firmly seated, the pressure in the activated brake line can not be applied to the pilot piston, so the trailer brake valve remains in the neutral position and trailer brakes are not activated.

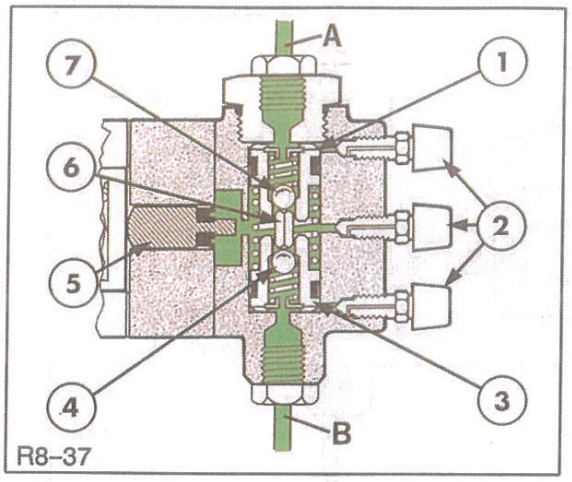

Brakes Not Applied 286

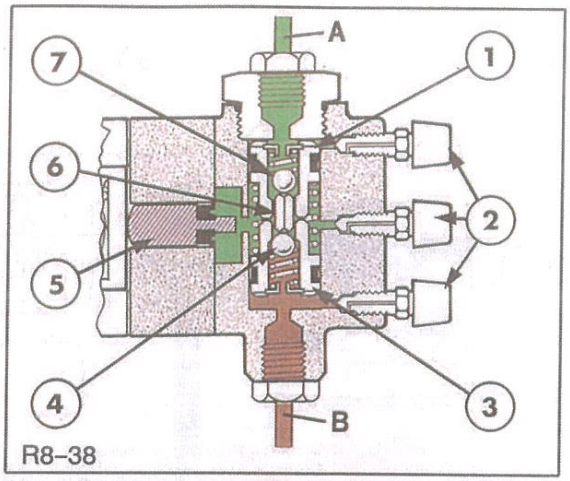

Single Pedal Brake Application 287

1. Piston
2. Bleed Screws
3. Piston
4. Ball
5. Pilot Piston
6. Plunger
7. Ball

A. Pressure from Right Hand Brake Sensing LIne

B. Pressure from Left Hand Brake Sensing LIne

Tractor Brake Sensing Pressure – Brake Applied

Tractor Brake Sensing Pressure – Brake Not Applied

Coupled Brake Pedal Application

When both brake pedals are depressed simultaneously, the pressure generated in the right and left hand brake lines is also applied to both Ports 'A' and 'B' of the brake valve pilot head.

This pressure causes the piston in each port to move toward the other while the plunger, which separates the two pistons, prevents the balls within the pistons from seating, Figure 288. The brake line pressure is then applied to the pilot piston, causing this piston to move forward and activate the trailer brake valve.

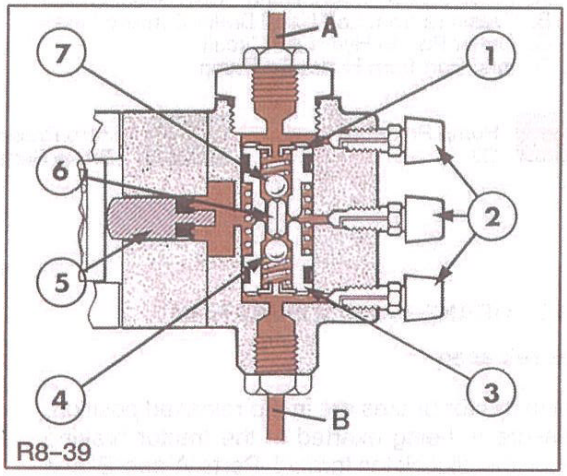

Coupled Pedal Brake Application 288

1. Piston
2. Bleed Screws
3. Piston
4. Ball
5. Pilot Piston
6. Plunger
7. Ball

Tractor Brake Sensing Pressure – Brake Applied

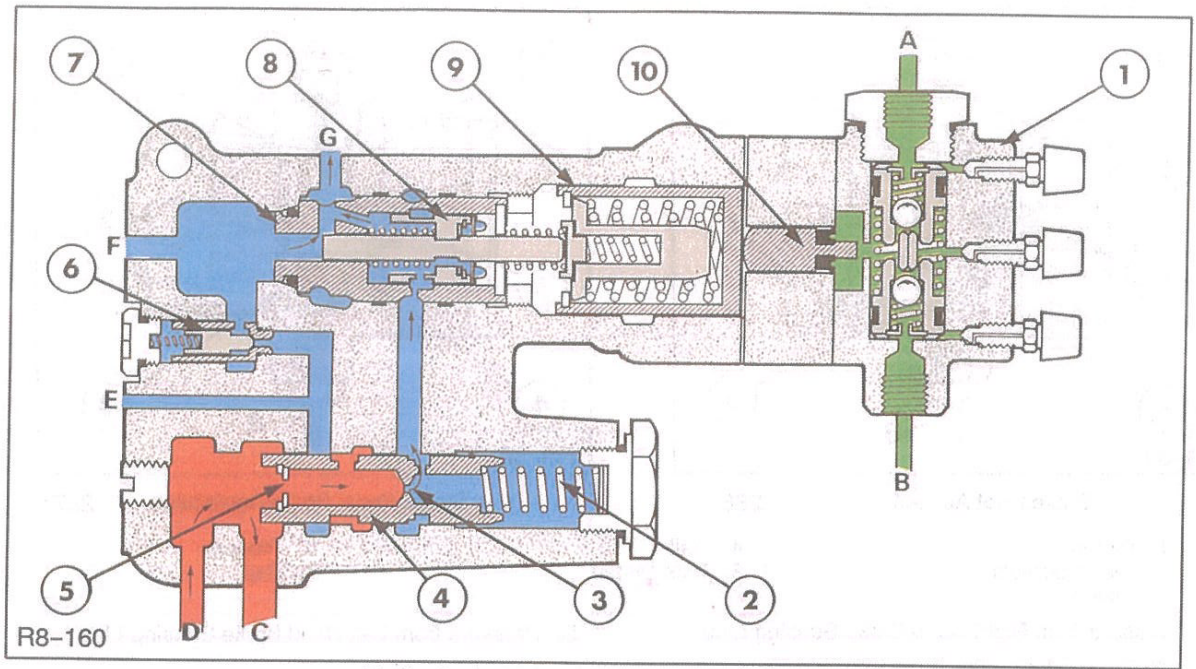

Trailer Brake Valve Operation – Brakes Released 289

1. Pilot Head
2. Spring
3. Drilling
4. Flow Regulating Valve
5. Restrictor
6. Check Valve
7. Control Valve Spool Bore
8. Control Spool and Plunger
9. Pressure Relief Element
10. Pilot Piston

A. Pressure from Right Hand Brake Sensing Line
B. Pressure from Left Hand Brake Sensing Line
C. Outlet Port to Hydraulic Circuit
D. Inlet Port from Hydraulic Pump
E. Load Sensing Gallery (CCLS Pump Installation only)
F. To Trailer Brakes
G. Return to Reservoir

Pump Pressure Oil

Zero Pressure Oil in Brake Sensing Lines

Return to Reservoir (Sump) Oil

TRAILER BRAKE VALVE OPERATION

Brakes released

When the tractor brakes are in the released position, no pressure is being exerted in the tractor braking lines or on the pilot piston through Ports 'A' and 'B' and the valve assumes the neutral position, Figure 289.

Oil from the hydraulic pump enters into trailer brake valve Port 'D'. A small flow of oil passes from Port 'D', through the restrictor in the centre of the flow regulating valve to the control spool, which in the neutral position permits this oil to return to reservoir through Port 'G'. The oil flow through the centre of the regulating valve also has to pass through a small drilling which limits the volume of oil returning to reservoir through Port 'G'.

The flow of oil from the hydraulic pump on reaching the restrictor in the flow regulating valve generates a higher pressure on the pump supply side which ensures that in neutral the flow regulating valve is held against the spring pressure to permit flow of oil from the pump supply Port 'D' to the tractor hydraulic system through Port 'C'. Additionally, in neutral the flow regulating valve while held against the spring pressure, prevents supply oil at Port 'D' from flowing to the trailer brake check valve.

On tractors installed with the variable displacement hydraulic pump assembly, with closed centre load sensing (CCLS), the load sensing gallery 'E' is provided. This gallery is not pressurised when the valve is in neutral, but when subjected to pressure, signals the hydraulic pump to increase output. Refer to Chapter 2 for description and operation of the variable displacement pump with closed centre load sensing.

On tractors installed with the fixed displacement gear type pump the load sensing gallery 'E' is not required or fitted. The valve components and operation are identical in every other respect to that installed with the variable displacement load sensing pump.

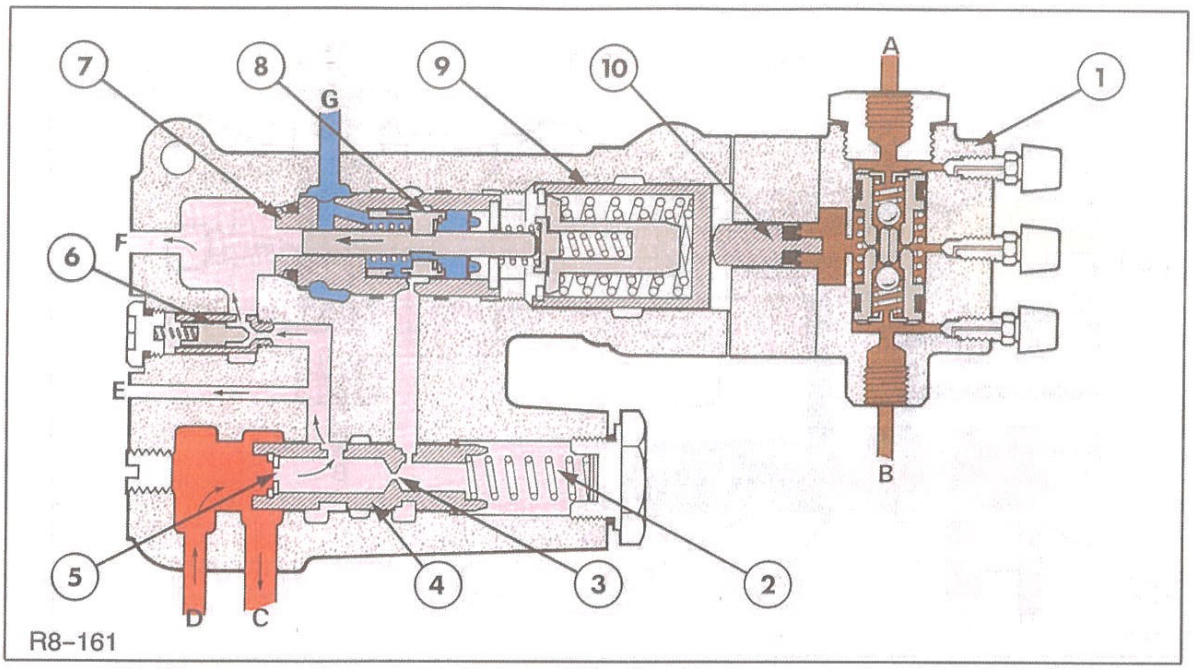

Trailer Brake Valve – Brakes Being Applied 290

1. Pilot Head
2. Spring
3. Drilling
4. Flow Regulating Valve
5. Restrictor
6. Check Valve
7. Control Valve Spool Bore
8. Control Spool and Plunger
9. Pressure Relief Element
10. Pilot Piston

A. Pressure from Right Hand Brake Sensing Line
B. Pressure from Left Hand Brake Sensing Line
C. Outlet Port to Hydraulic Circuit
D. Inlet Port from Hydraulic Pump
E. Load Sensing Gallery (CCLS Pump Installation only)
F. To Trailer Brakes
G. Return to Reservoir

Pump Pressure Oil

Reduced Oil Flow

Brake Sensing Line Pressure Oil

Return to Reservoir (Sump) Oil

Brakes Being Applied

When both brake pedals are depressed simultaneously the pilot piston moves forward pushing against the pressure relief element, Figure 290. As the pressure relief element moves to the left the control spool and plunger similarly move to the left.

As the control spool is moved to the left the flow of oil to reservoir through Port 'G' is prevented in two stages. First the connection between the trailer brake line Port 'F' and return to reservoir Port 'G' is closed and secondly, oil passing through the centre of the flow regulating valve is prevented from returning to reservoir through Port 'G'. As oil from the hydraulic pump continues to pass through the flow regulating valve, the combination of rising oil pressure on the spring side of the valve and the spring pressure, moves the flow regulating valve to the left.

The flow regulating valve now begins to restrict the flow of oil to the tractor hydraulic system, but directs the pump supply oil to open the check valve and pass through Port 'F' to apply the trailer brakes. The orifice located in the end of the flow regulating valve limits the rate at which oil can flow through the centre of the flow regulating valve to the trailer brakes. The residual output from the pump is allowed to flow to the tractor hydraulic system.

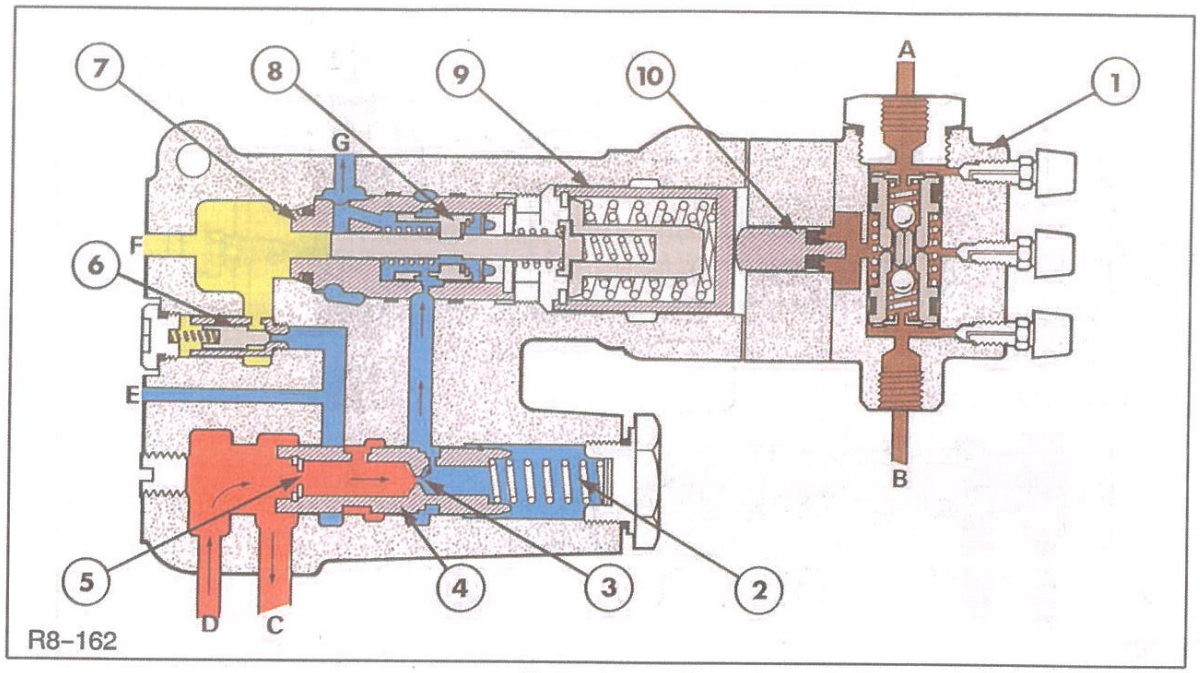

Trailer Brake Valve – Brakes Held 291

1. Pilot Head
2. Spring
3. Drilling
4. Flow Regulating Valve
5. Restrictor
6. Check Valve
7. Control Valve Spool Bore
8. Control Spool and Plunger
9. Pressure Relief Element
10. Pilot Piston

A. Pressure from Right Hand Brake Sensing Line
B. Pressure from Left Hand Brake Sensing Line
C. Outlet Port to Hydraulic Circuit
D. Inlet Port from Hydraulic Pump
E. Load Sensing Gallery (CCLS Pump Installation only)
F. To Trailer Brakes
G. Return to Reservoir

Pump Pressure Oil

Trapped Oil

Brake Sensing Line Pressure Oil

Return to Reservoir (Sump) Oil

Brakes Held

As the pressure in the trailer brake line builds up to match the pressure applied to the tractor braking system, the increase in pressure acts on the end of the control spool plunger in opposition to that pressure applied on the pilot piston from the tractor brake pressure line.

When the trailer brake line pressure has increase in accordance with the pressure applied by the brake pedals, the control spool plunger moves to the right, allowing the oil trapped on the spring side of the flow regulating valve to return to reservoir through port 'G'. Assuming a constant brake pedal pressure is being maintained this movement of the plunger is not sufficient to allow the trailer brake line to connect with the dump Port 'G'.

Because the oil on the spring side of the flow regulating valve is now open to reservoir, the valve moves to the right, preventing any further pump pressure oil from being directed over the check valve and into the trailer brake circuit, Figure 291. The oil in the trailer brakes is now trapped and maintains a constant braking pressure in accordance with the tractor brake pedal pressure.

Any increase in the pressure applied to the brake pedals will move the control spool and plunger to the left, causing the brake application cycle to be repeated until the pressure in the trailer brake circuit increases in accordance with the pressure being applied to the tractor brakes.

When the brake pedal pressure is decreased the control spool and plunger moves to the right allowing the trapped oil behind the flow regulating valve and the oil in the trailer brake circuit to return to reservoir through port 'G' as shown in Figure 289. The oil is allowed to escape to reservoir until the pressure in the trailer brake circuit once again matches the pressure applied to the brake pedals.

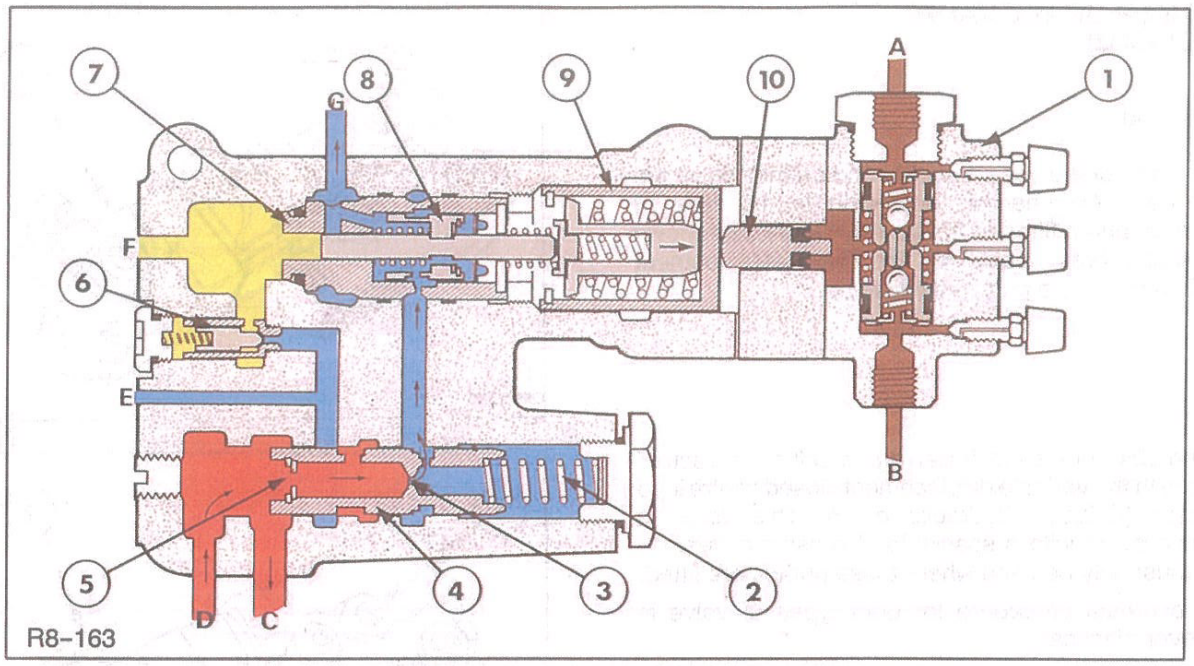

Trailer Brake Valve – Brakes Applied With Maximum Brake Pedal Pressure 292

1. Pilot Head
2. Spring
3. Drilling
4. Flow Regulating Valve
5. Restrictor
6. Check Valve
7. Control Valve Spool Bore
8. Control Spool and Plunger
9. Pressure Relief Element
10. Pilot Piston

A. Pressure from Right Hand Brake Sensing Line
B. Pressure from Left Hand Brake Sensing Line
C. Outlet Port to Hydraulic Circuit
D. Inlet Port from Hydraulic Pump
E. Load Sensing Gallery (CCLS Pump Installation only)
F. To Trailer Brakes
G. Return to Reservoir

Pump Pressure Oil

Trapped Oil

Brake Sensing Line Pressure Oil

Return to Reservoir (Sump) Oil

Brakes Applied with Maximum Brake Pedal Pressure

If at any time the maximum permissible trailer braking pressure of 1740–2180 lbf/in^2 (120–150 bar) is reached, for example, by pressing excessively on the tractor brake pedals, an increase in braking pressure is prevented by the pressure relief element.

As pressure in the trailer braking circuit increases to the maximum permissible limit, the trailer brake circuit oil pressure forces the control spool and plunger against the springs in the pressure relief element. As the pressure relief element springs are compressed the control spool plunger moves to the right, allowing the oil trapped behind the flow regulating valve to return to reservoir through port 'G. The flow regulating valve can now move to the right and prevent any further pump system pressure oil from being directed over the check valve to the trailer brake circuit.

TRAILER BRAKE VALVE OVERHAUL

GENERAL

The trailer brake valve housing and orientation of the pilot head (1) changes according to the type of hydraulic pump fitted to the tractor. Figure 293 shows the trailer brake valve for the fixed displacement tandem gear type pump installations.

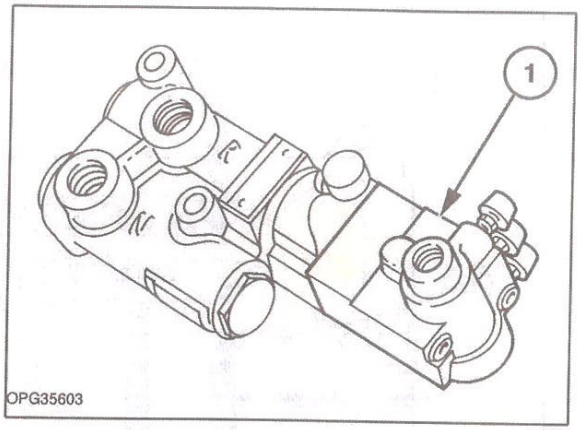

293

Figure 294 shows the trailer brake valve for tractors fitted with the variable displacement closed centre load sensing (CCLS) hydraulic pump. This valve is manufactured with a special load sensing gallery (1) and must only be used where these pumps are fitted.

The overhaul procedure for both types of valve is however identical.

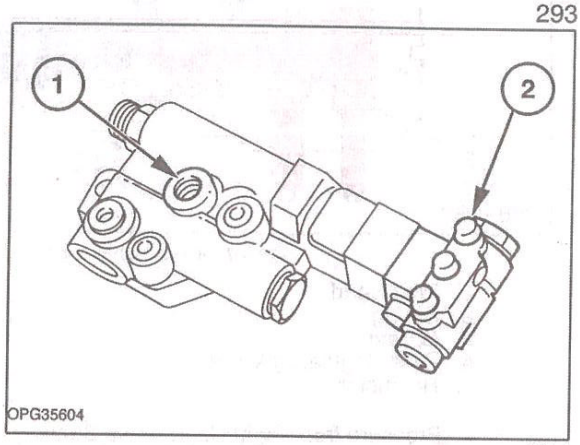

294

Trailer Brake Valve Assembly
(Variable Displacement CCLS Hydraulic Pump)

1. Load Sensing Gallery
2. Pilot Head

REMOVAL

1. Clean area around trailer brake valve (1).

2. Disconnect hydraulic connections to valve and allow escaping oil to drain into suitable container. Refer to Figure 295 and Figure 296 for the two types of installation.

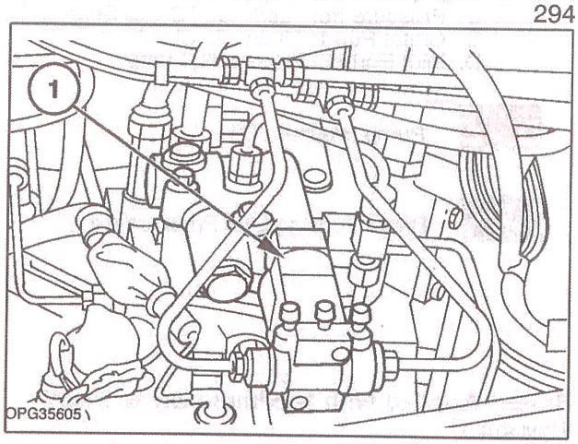

295

3. Remove trailer brake valve (1).

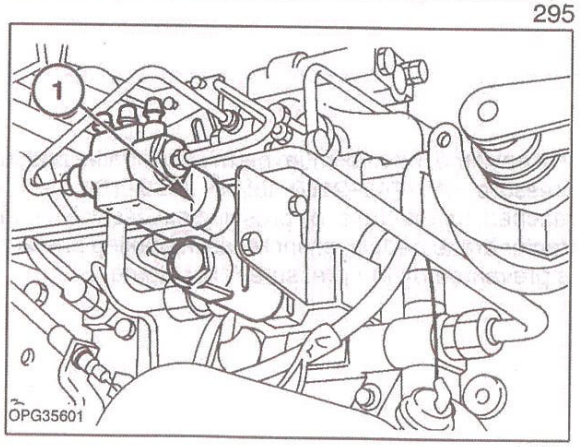

296

DISASSEMBLY

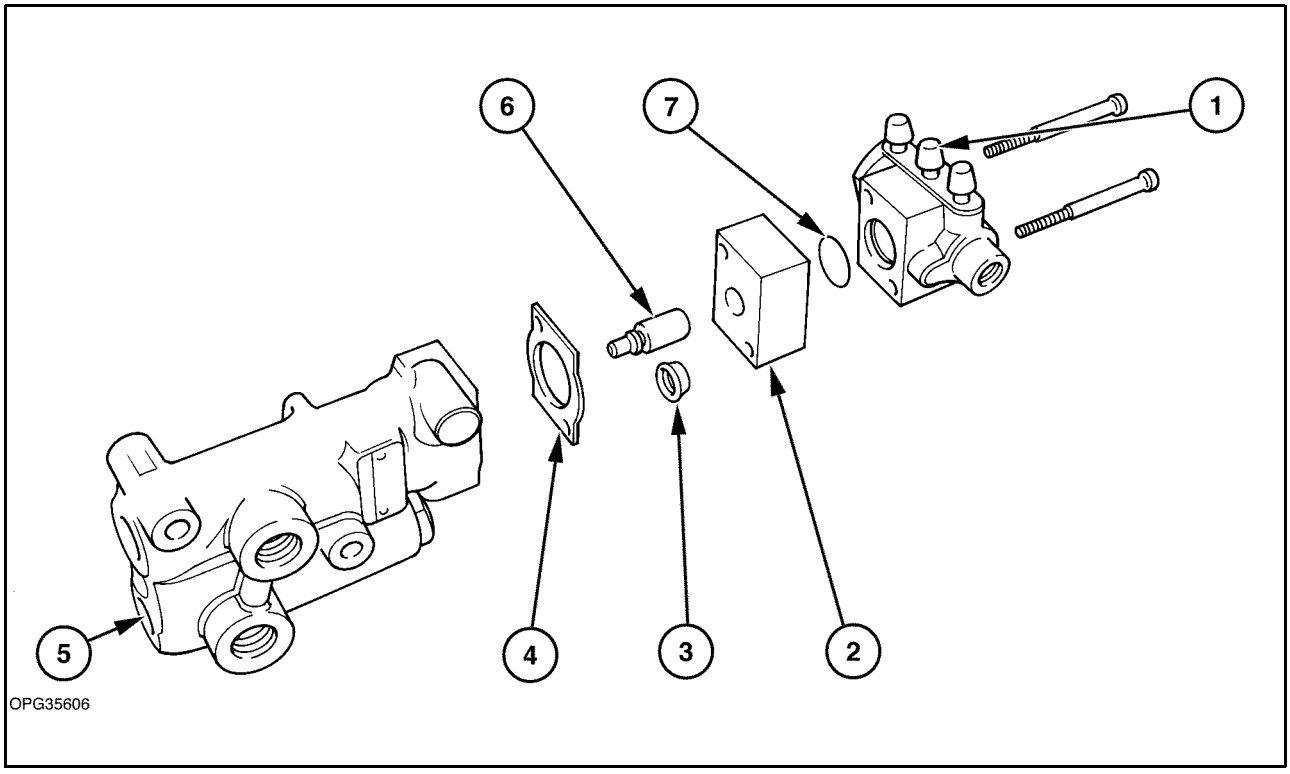

Pilot Head and Piston Assembly 297

1. Pilot Head
2. Piston Housing
3. Seal
4. Gasket
5. Trailer Brake Valve Housing
6. Piston
7. '0' Ring

1. Remove pilot head and withdraw piston assembly, Figure 297.

2. Remove adaptor on end of pilot head and remove components, Figure 298.

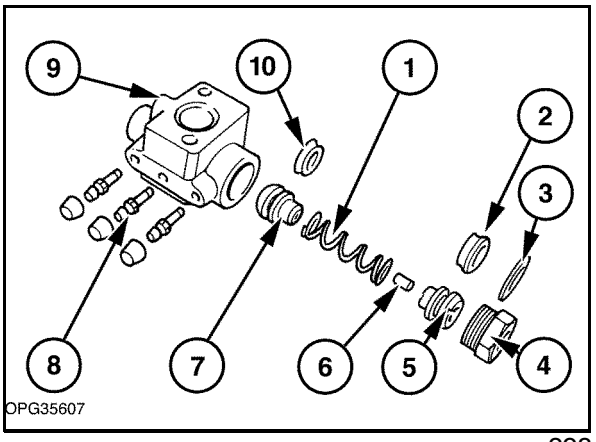

Pilot Head 298

1. Spring
2. Piston Seal
3. '0' Ring
4. Adaptor
5. Piston Assembly
6. Plunger
7. Piston Assembly
8. Bleed Screws
9. Pilot Head
10. Piston Seal

3. Remove pressure relief element (1) and control valve spool return spring (4) from valve housing. Refer to Figure 299.

NOTE: *The spring (2) and seat (3) locate within the relief element. It is not necessary to disassemble the pressure relief element as this is serviced as a pre-set assembly.*

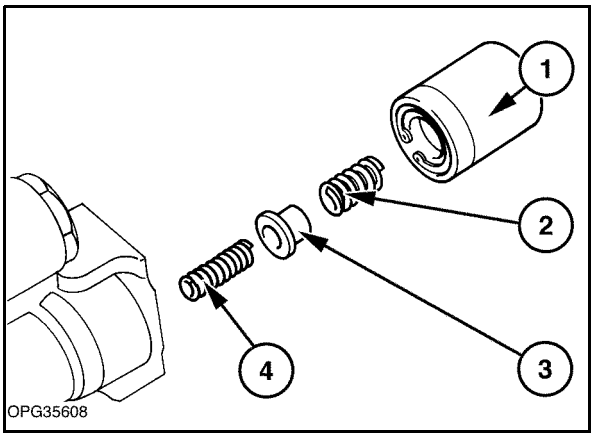

299

4. Remove collar (3) retaining the control valve spool assembly (1) and back up washer (2). Figure 300.

NOTE: *The retaining collar may be removed by placing a 14mm nut inside the locking ring. The nut should be of sufficient length to enable a socket spanner to be placed over the nut to allow the collar to be unscrewed.*

5. Using a suitable rod push control valve from housing.

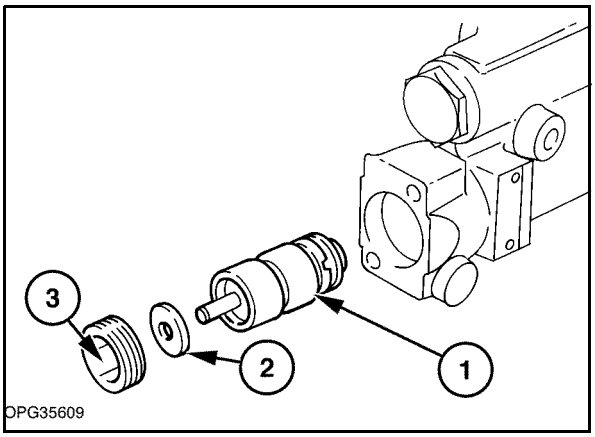

300

6. Pull control valve spool assembly from spool bore. Remove snap ring and disassemble spool and plunger assembly, Figure 301.

Control Valve Spool Exploded View

1. 'O' Ring
2. Spring
3. Plunger
4. Snap Ring
5. Seal
6. Washer
7. Locating Ring
8. Spool
9. Control Spool Bore

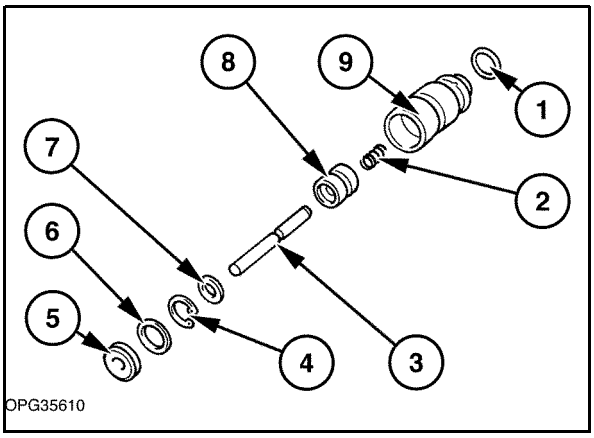

301

7. Unscrew end cap and withdraw spring and flow regulating valve spool. Remove snap ring and orifice from end of spool, Figure 302.

Flow Regulating Valve

1. Clip
2. Spring
3. End Cap
4. 'O' Ring
5. Spool
6. Orifice
7. Snap Ring

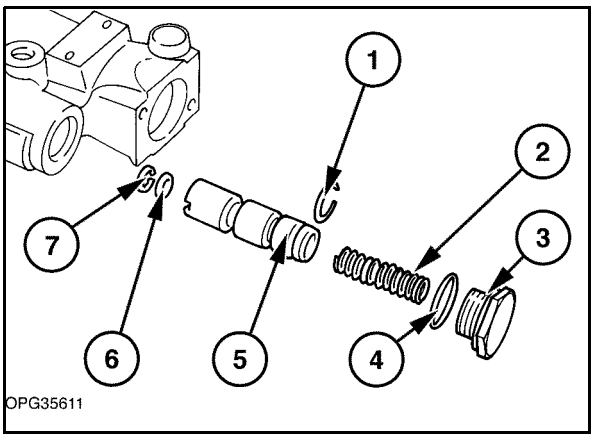

302

8. Remove check valve end cap and withdraw spring and check valve, Figure 303. If necessary unscrew and remove check valve seat.

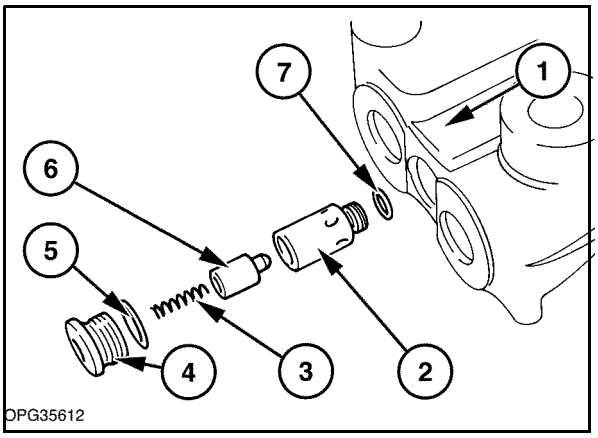

Check Valve Components 303

1. Trailer Brake Valve Housing
2. Check Valve Seat
3. Spring
4. End Cap
5. 'O' Ring Seal
6. Check Valve
7. 'O' Ring Seal

INSPECTION AND REPAIR

1. Carefully examine all components and replace any item showing signs of wear or damage.

NOTE: *Two 'O' ring seals are located inside the trailer brake valve body in the control valve bore. These seals must be carefully checked and if necessary replaced.*

RE-ASSEMBLY AND INSTALLATION

1. Re-assembly and installation follows the removal and disassembly procedure in reverse. On re-assembly observe the following requirements.

- Ensure all oil seals and gaskets are renewed.
- Tighten all bolts and fittings to the correct torque. See Specifications.

2. Bleed the trailer braking system according to the following procedure:

- Ensure the brake reservoir is full.
- Open the three bleed screws on the trailer brake valve and also the right and left hand brake bleed screws on the rear axle trumpet housings.
- Couple the brake pedals together and depress the pedals 6 times to their full stroke.
- Close all bleed screws.
- Attach transparent bleed pipes to left hand rear axle bleed screw and insert the open end of the pipe into a clean glass of brake fluid to New Holland Specification NH 610 A (Ambra Brake LHM.
- Open the bleed screw and slowly depress and release the coupled brake pedals until no more air is expelled with the brake fluid.
- Repeat the above procedure with the right hand brake bleed screw.
- Repeat the above procedure with the left hand, centre and right hand trailer brake valve bleed screws.
- Top up the brake reservoir to the maximum fill mark with brake fluid to New Holland Specification NH 610 A (Ambra Brake LHM).

PRESSURE TESTING

1. Connect 0-6000 lbf/in^2 (0-414 bar) pressure gauge FNH02028 to trailer brake coupling, Figure 304.

2. Set engine speed to 1500 rev/min.

3. Depress right hand brake pedal. There should be no reading on the pressure gauge.

4. Depress left hand brake pedal. There should be no reading on the pressure gauge.

5. Couple together and depress both brake pedals. The reading on the pressure gauge should increase as the brake pedals are depressed harder. The pressure should increase depending on pedal effort, until a maximum pressure of 2140 lbf/in^2 (120-150 bar) is achieved.

6. Release brake pedals. Pressure should reduce to zero.

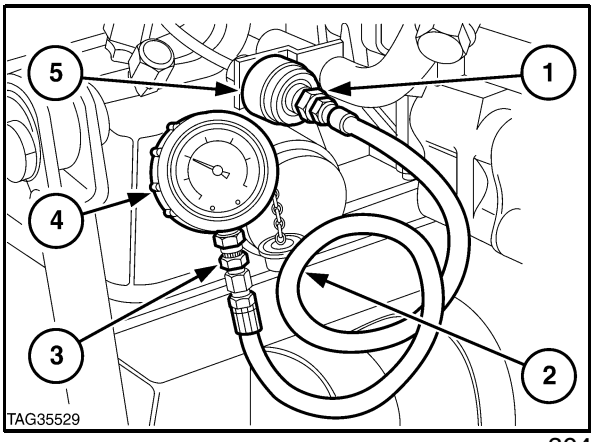

Trailer Brake Pressure Test 304

1. Adaptor 4FT.854
2. Test Hose Part No. 83936707
3. Adaptor FT. 8503-8 or FNH00705
4. Pressure Gauge FNH02028
5. Trailer Brake Coupler

REMOTE CONTROL VALVES

SPECIFICATIONS

Detent Regulating Valve Pressure	2150–2350 lbf/in^2 (148–162 bar)

TORQUES

Flow Control Valve Plug	20 lbf ft	27 Nm
Detent Shaft Pivot Coupling	5 lbf ft	7 Nm
Detent Housing Retaining Screws	5 lbf ft	7 Nm
Priority Check Valve	5 lbf ft	7 Nm
Valve to Coupler Housing Bolts	11–15 lbf ft	15–20 Nm
Valve to Mounting Bracket Bolts	20–26 lbf ft	27–35 Nm
Remote Valve Coupler to Housing	60 lbf ft	82 Nm

THREAD SEALANT

New Holland Thread Lock and Seal, Part Number 82995773

SPECIAL TOOLS

Flowmeter	VL Churchill MS820A, FNH 02755, FNH 02760 or suitable equivalent
Flowmeter Hoses	Procure locally to suit Flowmeter used
Coupler Remover	North America FNH 00095
Slipper Seal Installation Tool	VL Churchill FT 8611

REMOTE CONTROL VALVES–DESCRIPTION AND OPERATION

DESCRIPTION

TS Series Tractors may be fitted with the optional closed centre load sensing remote control valves for the operation of external hydraulic services.

Remote valves are available to operate external hydraulic services, eg hydraulic cylinders and motors. Up to four remote control valves may be installed and are located at the rear of the tractor, Figure 305. The valves are mounted directly onto quick release couplers which are designed to give unrestricted flow and low back pressure.

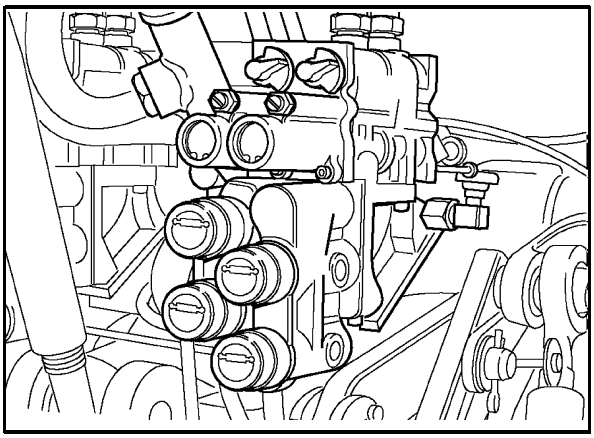

305

On tractors with cab, the two valves are actuated by a single joystick control (1) Figure 306, located in a console to the right of the operator's seat.

On tractors without cab, separate levers, (1) and (2) Figure 307, are provided for each valve. However, the joystick control is available as a dealer installed accessory. Models with cab may have the optional third and fourth valves, installed to the left of the hydraulic top link. The levers (3) and (4) Figure 306 control valves III and IIII, respectively.

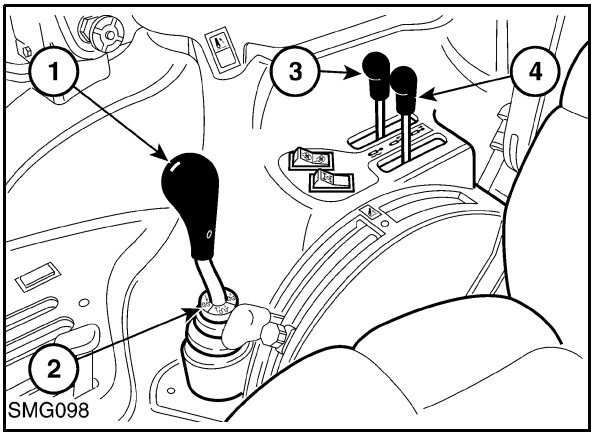

306

The joystick (1) and remote control valve levers (3) and (4) each have four operating positions.

The joystick/levers and their respective valves are colour coded for identification and the valves are also numbered as shown in the following chart:

Joystick/Lever Position	Colour Code	Valve Position/No.
Joystick or lever	Green	Right-hand outer – I
Joystick or lever	Blue	Right-hand inner –II
Right-hand lever	Tan	Left-hand inner – III
Left-hand lever	Black	Left-hand outer – IIII

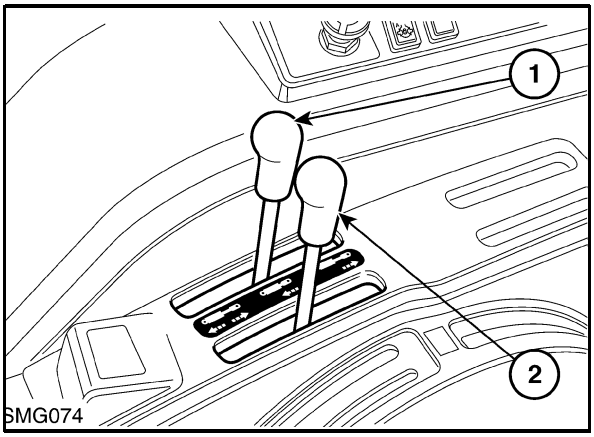

307

Joystick Control (where fitted)

The joystick (1) Figure 306 actuates valves I and II, operating in a cross pattern. Moving the joystick backwards and forwards in a straight line actuates valve no. I. Moving the joystick sideways in a straight line actuates valve No. II. Moving the joystick diagonally will actuate both valves simultaneously. By applying directional bias, one valve can be made to actuate at a faster or slower rate than the other.

Move the joystick rearward from the neutral position and the cylinder connected to valve No, I will extend to raise the implement. Push the joystick forward, past neutral, to retract the cylinder. Pushing it fully forward, beyond the 'retract' position, will select 'float' which will permit the cylinder connected to remote control valve No. I to extend or retract freely, thereby allowing equipment such as scraper blades to 'float' or follow the ground contour.

Move the joysitck to the left from the neutral position and the cylinder connected to valve No. II will extend to raise the implement. Move the joystick to the right, past neutral, to retract the cylinder. Moving it fully to the right, beyond the 'retract' position, will select 'float' which will permit the cylinder connected to remote control valve No. II to extend or retract freely.

The lock collar (2) Figure 308, provides selective control of the joystick. With the lock collar pushed fully down, the joystick is locked in neutral and neither of the remote control valves can be operated, either by accident or by choice.

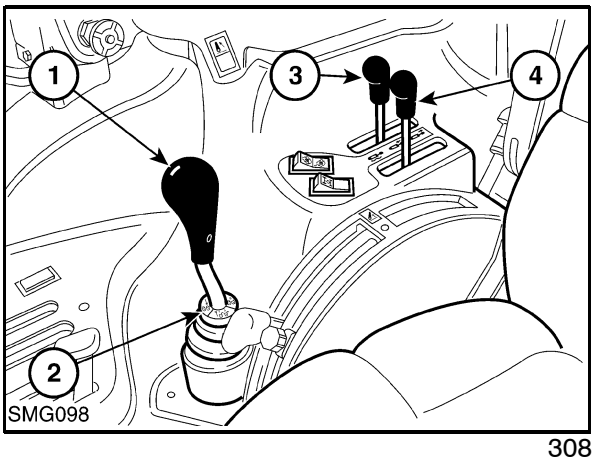

308

Lift the collar up to the first, central position and the joystick may only be moved forward or backward to operate valve No. I. No II remote valve is locked.

If the lock collar is pulled fully up, valves I and II may be operated independently or together by moving the joystick control in the appropriate direction.

Lever Controls (where fitted)

The levers are moved forward and backwards to select extend, retract and float, as with the joystick control.

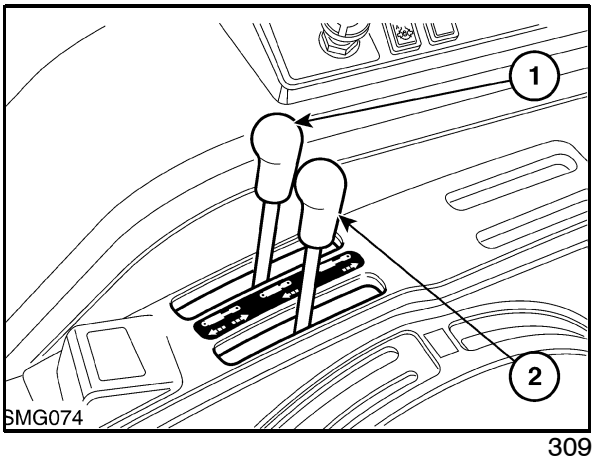

309

Move the lever rearward from the neutral position and the cylinder will extend to raise the implement. Push the lever forward, past neutral, to retract the cylinder. Pushing it fully forward, beyond the 'retract' position, will select 'float' which will permit the cylinder to extend or retract freely, thereby allowing equipment such as scraper blades to 'float' or follow the ground contour.

Joystick or Lever Controls

The float position is also used for retracting a single–acting ram cylinder, such as when lowering a tipping trailer, etc. (see **Operating Single–Acting Cylinders**)

The extend, neutral, retract and float positions are identified by symbols on a decal next to the joystick and/or control levers.

A detent will hold the joystick/lever in the selected extend or retract position until the remote cylinder reaches the end of the stroke when the control lever will automatically return to neutral. alternatively, the lever may be returned to neutral manually. The lever will not return automatically from the float position.

A detent screw is provided on each remote control valve and may be adjusted to vary the system pressure required to return the lever automatically to the neutral position.

If you wish to remove the detent, a conversion kit is available.

NOTE: *Do not hold the joystick/lever in the extend or retract position once the remote cylinder has reached the end of the stroke as this will cause the relief valve to 'blow'. Forcing oil through the relief valve for extended periods will overheat the oil and may lead to failure of hydraulic and driveline components.*

To adjust the system pressure at which the remote control valve lever automatically returns to neutral, turn the screw (3) Figure 310. turning the screw clockwise (in) will increase the pressure at which the valve kicks out. Turning the screw anti–clockwise (out) will decrease pressure, and the valve will kick out more readily.

Each remote control valve has its own flow control valve (4) Figure 310 and a pair of couplers. The couplers are of self–sealing/locking design but will allow remote cylinder hoses to pull free if the implement should become disconnected from the tractor. The upper (lift) coupler (1) Figure 310, is identified by an 'extended cylinder' symbol moulded into the rubber dust cap. The lower (drop) coupler (2) Figure 310, has a 'retracted cylinder' symbol.

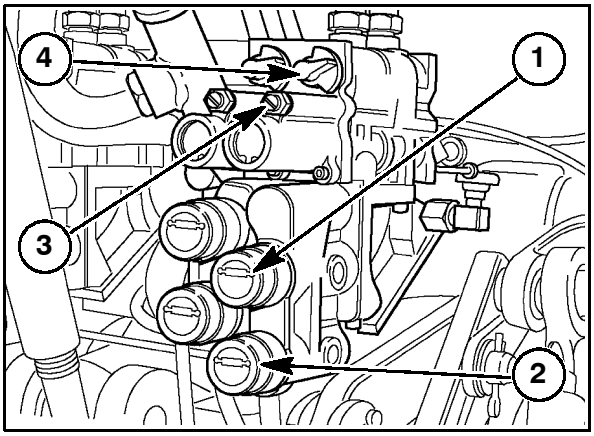

310

Connecting Remote Cylinders – Figures 311 to 313

WARNING: *Before connecting or disconnecting hydraulic hoses at the remote cylinders, stop the engine and relieve the pressure in the circuit by moving the remote control valve lever(s) fully forward to the 'float' position then back to neutral. Never work under or allow anyone near raised equipment as it will drop when relieving pressure in the system.*

WARNING: *Before disconnecting cylinders or equipment ensure the equipment or implement is supported securely.*

IMPORTANT: *Before connecting remote cylinder hoses, stop the engine and thoroughly clean the connections to prevent oil contamination. Remote cylinders are operated by oil drawn from the tractor hydraulic system, therefore, always check and replenish the hydraulic system oil after remote cylinder equipment has been connected and cycled a few times. Operating the tractor with a low oil level may result in damage to the rear axle and transmission components.*

NOTE: *When topping up the rear axle to accommodate the requirement of remote cylinders, no more than 45 litres (10.0) imp. Gallons) should be added to bring the oil level up to the full mark on the dipstick.*

Alternatively, remote cylinders with a total oil capacity of up to 18 litres (4.0 Imp. Gallons) may be connected to the tractor hydraulic system without adding oil, provided that the tractor is being operated on level ground.

To connect a remote cylinder, insert the feed and/or return hose through the slit in the appropriate dust cap, ensuring it is correctly seated in the coupler. Ensure that there is sufficient slack in the hose(s) to allow the tractor/implement to turn in either direction.

To equalise the pressure in the hose and tractor couplers, start the engine and move the valve control lever to the 'float' position, then return it to neutral. To disconnect, grip the hose a short distance from the coupler, push the hose forward, into the coupler, then quickly pull on the hose to 'pop' the coupler free.

WARNING: *Never work under equipment supported by a hydraulic device because it may drop if the control is actuated (even with the engine stopped) or in the event of hose failure. Always use a secure support for equipment which must be serviced while in the raised position.*

The flow control valve (4) Figure 310, meters the flow of oil to the remote cylinder and thus controls the rate of response of the cylinder.

Turn the flow control knob anti–clockwise (hare symbol uppermost) to increase the rate of oil flow. Turn the knob clockwise (tortoise symbol uppermost) to decrease the rate of flow. For flow rates, see Specifications.

Operating Double-Acting Cylinders - Figure 311
Connect the **feed** hose (1) between the **piston end** of a double–acting cylinder and the **upper** coupler (4) on the remote control valve. Connect the **return** hose (2) between the **lower** coupler (3) on the same valve and the **rod end** of the cylinder. To extend a double–acting cylinder, pull the control lever towards you, to the 'raise' position.

To retract a double–acting cylinder, push the control lever away from you, past neutral to the 'lower' position.

Further movement of the lever away from you will select 'float' which will allow the cylinder to extend or retract freely. This feature is of material assistance when carrying out work with equipment such as scraper blades and loaders.

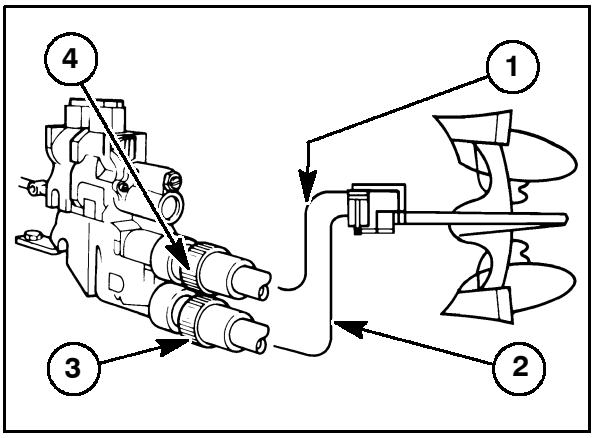

311

Operating Single-Acting Cylinders - Figure 312
Connect the hose (1) from a single–acting cylinder to the **upper** coupler (2) on the remote control valve, as previously described.

To extend a single–acting cylinder, pull the control lever toward you, to the 'raise' position.

Manually return the lever to the neutral position to stop the cylinder before it is fully extended or allow the valve to return to the neutral automatically when the cylinder reaches the end of it's stroke.

To retract a single–acting cylinder, move the lever fully away from you, to the 'float' position.

IMPORTANT: *Always use the 'float' position to lower a single–acting cylinder. The 'lower' position is for double–acting cylinders only.*

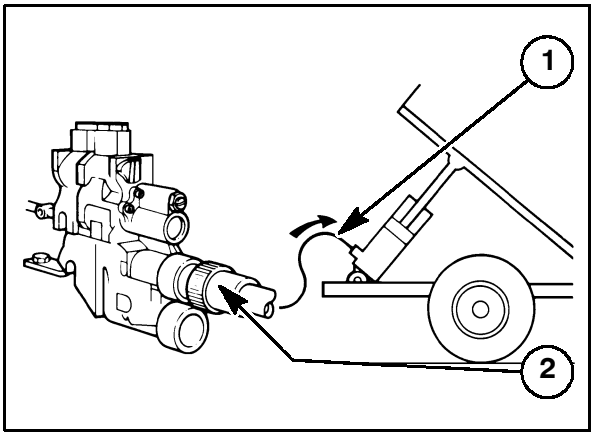

312

Operating Continuous Flow Hydraulic Equipment - Figure 313

Continuous flow hydraulic equipment (e.g. hydraulic motors) should be connected to remote control valve coupler with the **feed** hose (2) connected to the **lower** coupler (3) and the **return** hose (1) connected to the **upper** coupler (4) of the same valve.

With the remote control valve lever fully away from you, in the 'float' position the motor will be stationary. The hydraulic motor will operate if the lever is pulled towards you, to the 'lower' position.

IMPORTANT: *To stop the motor, move the lever fully away from you, to the 'float' position. The motor will then slow to a halt.*

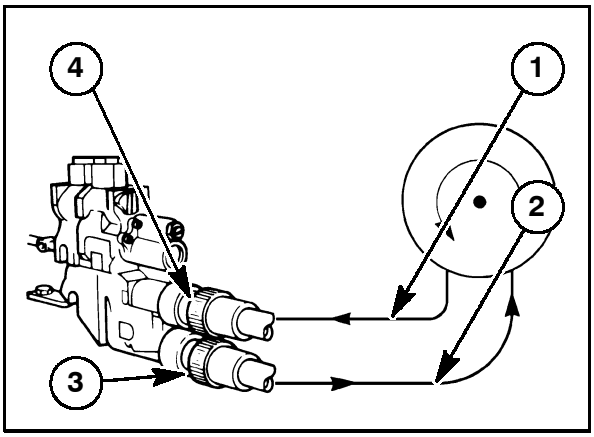

313

Observe the following to further protect the tractor and equipment:

- Do not open any by–pass valve in the equipment or motor. Use the flow control valve to control the rate of flow or speed of the motor.

- Do not hold the remote control valve lever to operate the equipment. If the detent will not hold the lever, adjust the detent screw (1) Figure 314, as previously described, check the equipment for proper adjustment.

- To assure optimum hydraulic oil cooling and prevent overheating, operate continuous flow equipment at the highest flow setting (by use of the flow control valve) and lowest engine speed that will give the required machine performance and speed.

- It is recommended that a temperature gauge, where available, is installed in the remote circuit when using hydraulic motors for continuous operation. If over–heating occurs, stop the hydraulic motor until the oil cools. Ensure the flow control setting is at maximum and the engine speed at a minimum, appropriate to machine performance.

If operating conditions are normal and high temperatures persist, install an oil cooler in the motor return circuit. The maximum recommended operating temperature of the oil is 110°C (230°F)

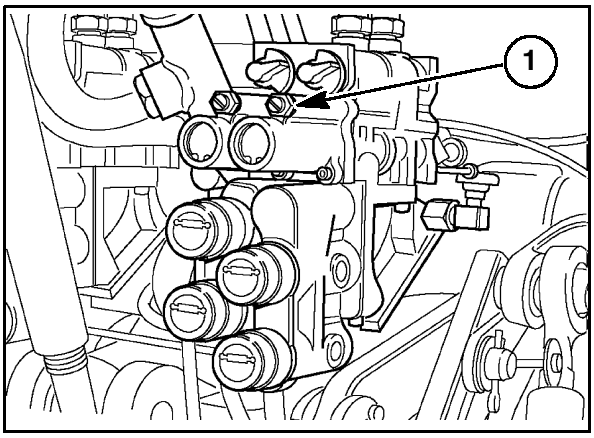

314

Operating Several Remote Valves Simultaneously or Remote Valves and Hydraulic Lift Simultaneously

NOTE: *The variable displacement pump fitted to tractors with the closed centre load-sensing system adjusts the oil flow according to the individual flow control settings up to the maximum output possible, dependent upon engine speed. The oil flow will be relatively constant in the remote control valve circuits if the flow control valves are used to regulate the flow, thus providing constant operating speed for hydraulic motors, etc., even if engine speed varies. Maintain the engine speed above the minimum required for simultaneous operation of all the required circuits and vary ground speed by selection of the appropriate gear ratio.*

If operating two or more remote control valves simultaneously or remote valves and the hydraulic lift, all the flow control valves should be adjusted to provide a partial flow. If not so adjusted, all the available flow may be directed to the full flow circuit when the pressure in that circuit is less than that of the other circuits in use.

Bleeding Remote Cylinders

When connecting a cylinder with trapped air, i.e., a new cylinder, one that has been out of service or one that has had the hoses disconnected, it will be necessary to bleed the cylinder to remove the air.

With the hoses connected to the remote control valve couplers at the rear of the tractor, position the cylinder with the hose end uppermost and extend and retract the cylinder seven or eight times using the remote control valve operating lever.

Check the rear axle oil level before and after operating a remote cylinder.

HYDRAULIC CONNECTIONS AND COMPONENTS

Connections from the hydraulic pump to the remote valves differ according to the type of hydraulic pump installed on the tractor.

Tractors with Fixed Displacement Hydraulic Pumps

Figure 315 shows the installation of a double remote valve housing on a tractor fitted with fixed displacement hydraulic gear type pumps. A maximum of four remote valves, however, can be fitted if required.

When a tractor is fitted with fixed displacement hydraulic pumps the priority valve pack containing the combining valve is also installed.

The hydraulic lift has priority on oil supply from the fixed displacement hydraulic pump, with surplus capacity directed through the combining valve, in the priority valve pack to the remotes.

Although the oil supply from the auxiliary engine mounted pump to the priority valve pack is via external pipework, the supply from the main hydraulic pump to the priority valve pack and combining valve is through internal galleries within the hydraulic top cover.

The combining valve operates in conjunction with the remote valves and performs the following functions:–

Returns main hydraulic and engine mounted pump flow to sump (rear axle) when remotes are in neutral.

Directs the main hydraulic and engine mounted auxiliary pump flow, where fitted, to the deluxe remotes when operated.

Returns surplus pump flow to sump if pump supply exceeds demand.

Protects engine mounted auxiliary pump and remotes from excessive pressure.

Refer to Chapter 4 for description and operation of the priority valve pack.

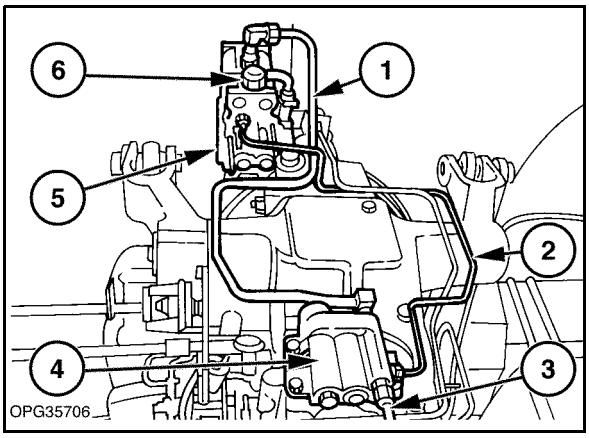

Remote Control Valve Installation 315
(Tractors with Fixed Displacement Pump)

1. Supply to Remote Valve
2. Load Sensing (Pilot) Line
3. Supply from Auxiliary Engine Mounted Pump
4. Priority Valve Pack (contains combining valve)
5. Remote Valve Housing
6. Return from Remote Valve

Tractors with Variable Displacement CCLS Hydraulic Pump

Figure 316 shows the installation of two double remote valve housings on tractors installed with the variable displacement closed centre load sensing hydraulic pump.

Tractors fitted with the variable displacement closed centre load sensing (CCLS) hydraulic pump do not require the priority valve pack and combining valve, necessary for fixed displacement hydraulic pumps installations.

On tractors fitted with the variable displacement CCLS hydraulic pump, oil required by the remote valves, flows directly from and returns to the hydraulic pump housing. This is possible because output from the pump, irrespective of the hydraulic circuit being operated, is continually adjusted according to the hydraulic demand of the tractor.

Refer to Section 35, Chapter 2 for the total description and operation of the variable displacement CCLS hydraulic pump assembly.

All Tractors

Irrespective of the type of hydraulic pump installed and to ensure that pump flow is controlled by the remote valve with the highest operating circuit pressure, priority check valves are installed in the load sensing lines between each individual remote valve.

Where two individual valve housings are fitted, for example if three or more remote valves are installed, a check valve is fitted at the 'Tee' joint between the load sense line for each valve. Refer to item 2, Figure 316, for the typical location of the check valve.

Where a double spool remote valve housing is fitted a check valve is also fitted between the two valves within the housing and is located as shown in Figure 317, items 22/23.

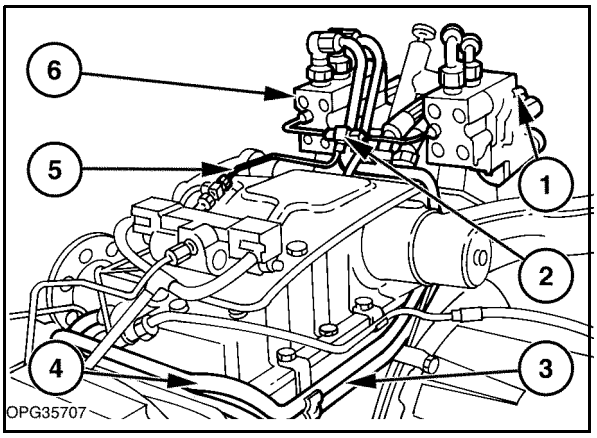

316

Remote Control Valve Installation
(Tractors With Variable Displacement CCLS Hydraulic Pump)

1. Double Spool Remote Valve Housing
2. Load Sense Line Priority Check Valve
3. Return From Remote Valve To Hydraulic Pump
4. Feed To Remote Valve From Hydraulic Pump
5. Load Sense Line
6. Double Spool Remote Valve Housing

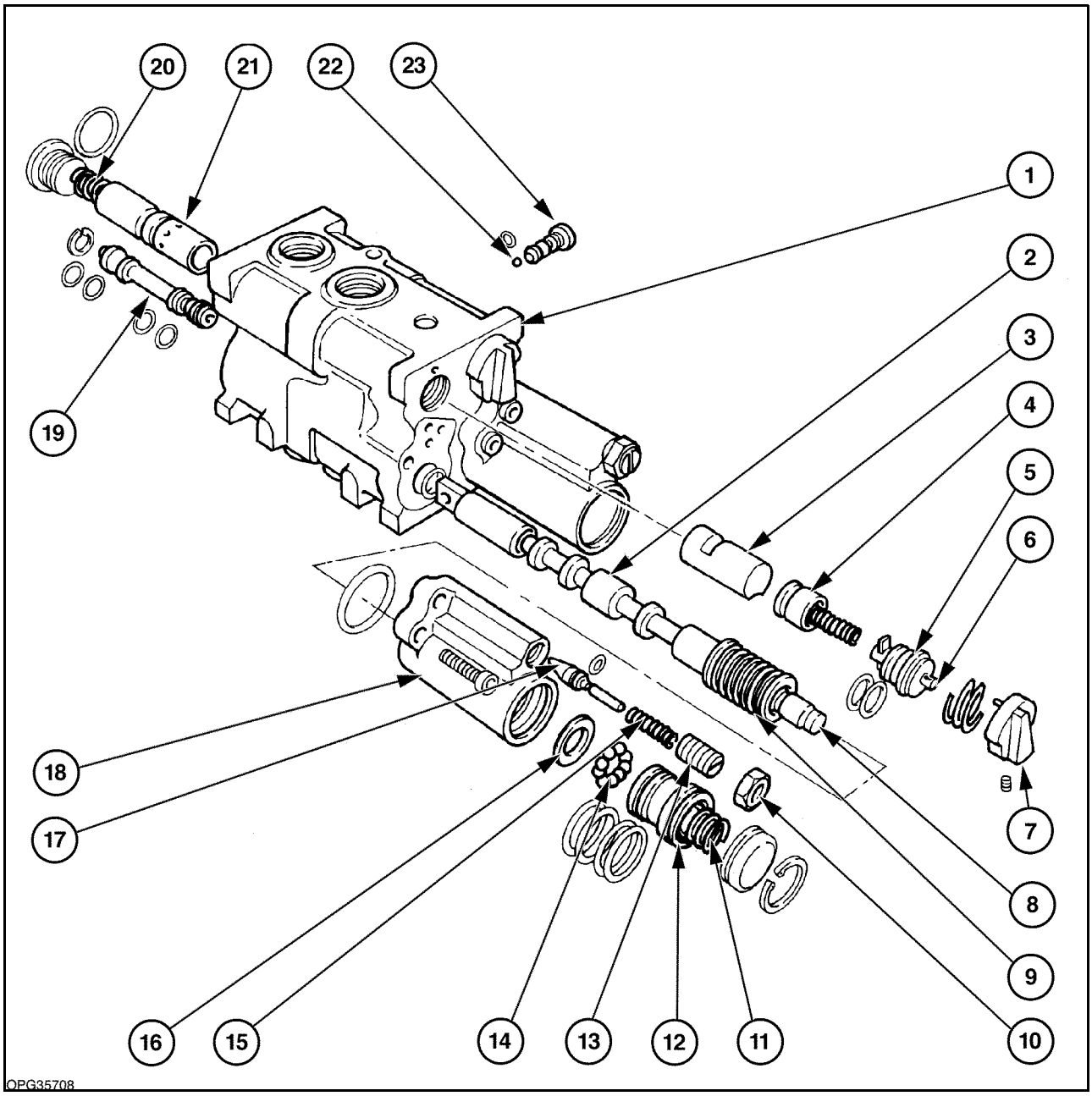

Double Spool Remote Control Valve 317

1. Valve Body
2. Spool
3. Flow Restrictor*
4. Load Check Valve
5. Flow Restrictor End Plug
6. Flow Restrictor Control Shaft
7. Flow Restrictor Control Knob
8. Detent Plunger
9. Spool Centering Spring
10. Locknut
11. Detent Piston Spring
12. Detent Piston
13. Detent Valve Spring Adjuster
14. Detent Balls (9 off)
15. Detent Regulating Valve Spring
16. Spacer
17. Detent Regulating Valve
18. Detent Housing
19. Shuttle Check Valve
20. Flow Control Spring
21. Flow Control Spool
22. Priority Check Valve Ball (double spool only)
23. Priority Check Valve Retainer

** The flow restrictor **must** be installed with the large slot positioned 180^0 to that shown in illustration.

The principal components of the double spool remote control valve assembly are shown in Figure 317 and will assist in identifying the parts detailed in the oil flow diagrams used to explain the operation of the valve.

Where a single spool remote valve is installed on a tractor, The individual component parts are identical to those shown in Figure 317 for double spool assemblies.

HYDRAULIC CIRCUITS

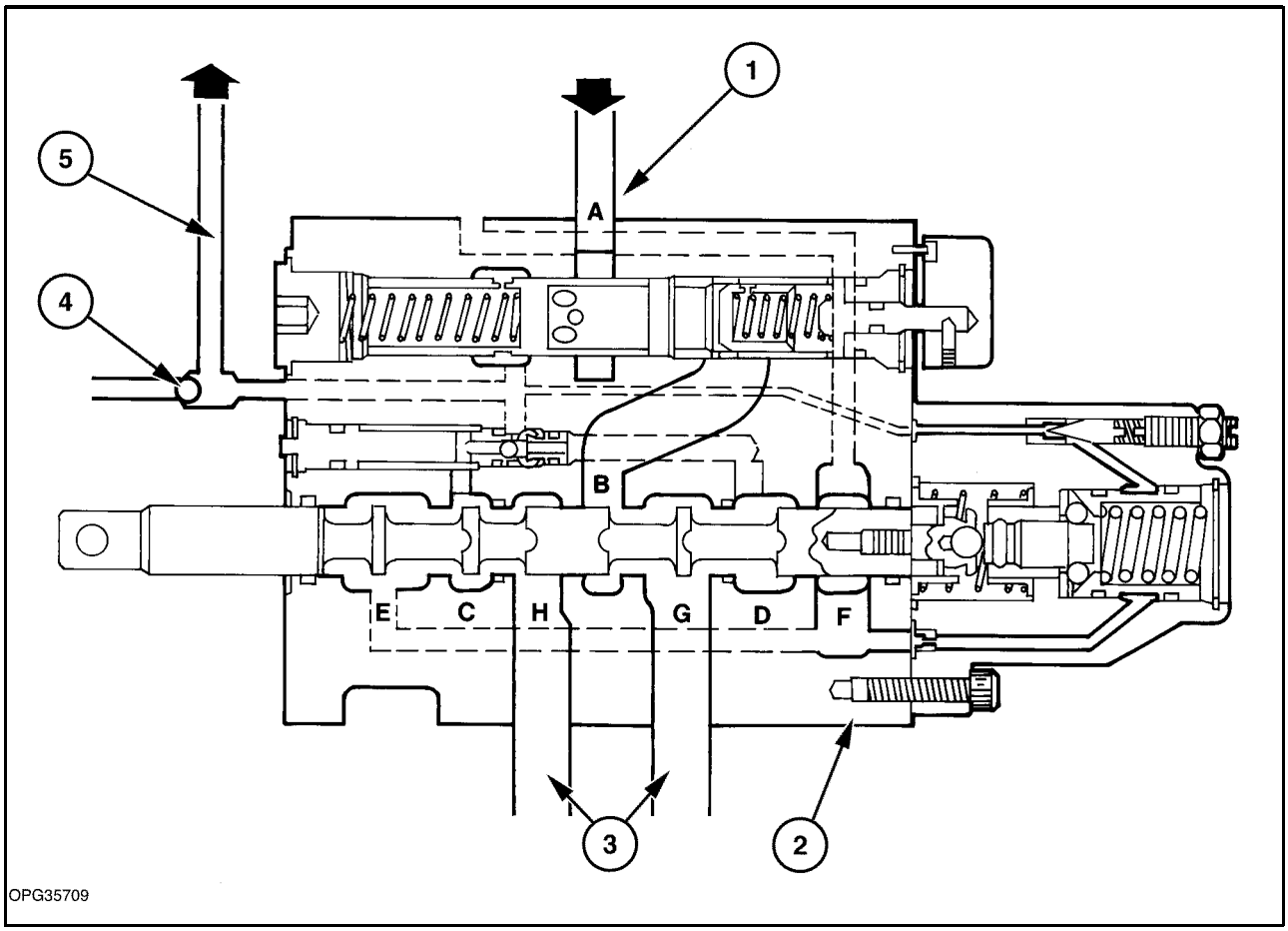

318

Hydraulic Oil Supply to Remote Valves for Tractors
Installed with Variable Displacement CCLS Hydraulic Pump

1. Supply to Remote Valve Direct from Variable Displacement CCLS Hydraulic Pump
2. Remote Control Valve Assembly
3. Lift and Drop Ports to Auxiliary Equipment
4. Load Sense Line Check Valve
5. Load Sense Line to Hydraulic Pump

The hydraulic circuits shown in Figures 319 to 342, illustrate operation of the remote valves. These circuits also show operation of the combining valve used on tractors with the fixed displacement hydraulic pump.

When studying operation of the remote valves on tractors installed with the variable displacement CCLS hydraulic pump the same principle of operation applies but all reference to the combining valve should be disregarded.

On tractors with the variable displacement CCLS hydraulic pump, the oil supply to the remote valve at port ‘A’ comes directly from the hydraulic pump and the load sensing line connects directly to the flow compensating valve on the pump body as shown in Figure 318.

Oil Flow In Neutral

With reference to Figure 319, Page 4-259.

When the remote valves are in neutral the control valve spool is held in the neutral position by the centering spring and passage ‘B’ is blocked by the centre land of the spool.

The control valve spool also isolates lift port ‘G’ and drop port ‘H’ from supply passage ‘B’ and return oil galleries ‘E’ and ‘F’. The oil in both ends of the lift cylinder is, therefore, trapped.

When the valve is in neutral galleries ‘C’ and ‘D’ connect with the return oil galleries ‘E’ and ‘F’ allowing pressure in the load sensing lines from the valve to return to sump.

On tractors with fixed displacement hydraulic pumps the combining valve moves to the left, against the spring, diverting oil flow from the pumps back to reservoir through the priority valve assembly.

On tractors with the variable displacement CCLS hydraulic pump the flow compensating valve responds to the zero pressure in the load sensing line and controls the swash plate angle to maintain the pre–set low pressure standby.

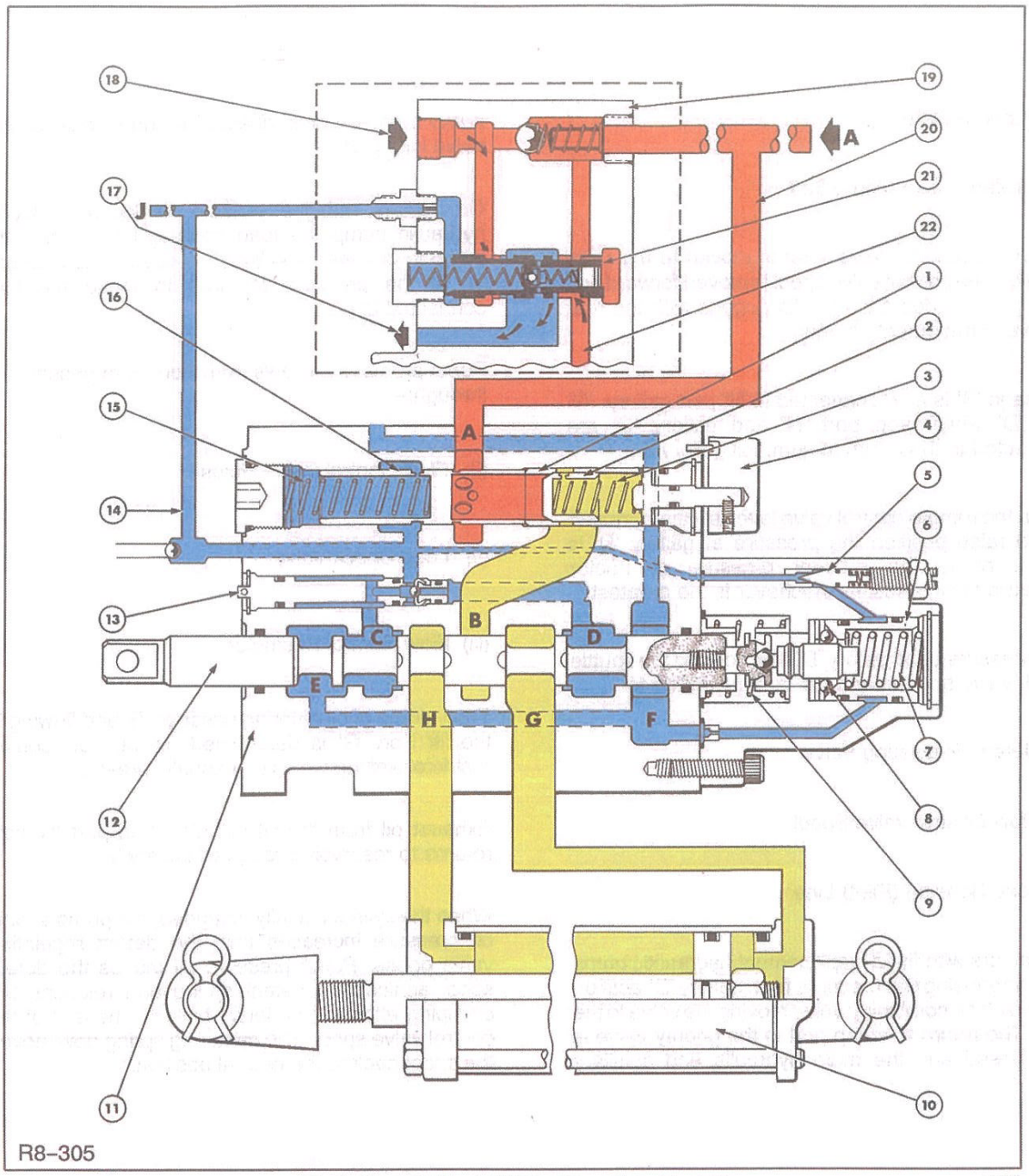

Single Remote Control Valve Operation–Neutral 319

Pump Pressure Oil | Exhaust Oil | Trapped Oil

1. Flow Control Restrictor
2. Load Check Valve
3. Check Valve Spring
4. Flow Control Knob
5. Detent Regulating Valve
6. Detent Spool
7. Detent Plunger and Spring
8. Detent Balls
9. Centering Spring
10. External Cylinder
11. Valve Body
12. Control valve Spool
13. Shuttle Check Valve
14. Load Sense Line (Pilot Line)
15. Flow Control Spring
16. Flow Control Spool
17. Return to Sump*
18. Auxiliary Pump Supply*
19. Hydraulic Priority Valve Assembly*
20. Supply to Remote Valve
21. Combining (Sequencing) Valve*
22. Main Pump Supply via Combining Valve*

*Tractors with Fixed Displacement Hydraulic Pump Only

For Tractors Fitted with Variable Displacement CCLS Hydraulic Pump

A = CCLS Pump Supply

B = CCLS Pump Load Sensing Line

Oil Flow In Raising

With reference to Figure 320.

When the remote valve lever is moved to the raise position, the control valve spool is moved forward and the spring loaded detent balls engage with the rear groove in the detent plunger.

Passage 'B' is now connected to lift port gallery 'G' and 'D' while drop port 'H' and gallery 'C' are connected to the return to sump oil gallery E.

When the remote control valve lever is initially moved to the raise position the pressure at gallery 'D' is equivalent to the cylinder pressure or tractor hydraulic back pressure whichever is the greatest.

The pressure oil at gallery 'D' now flows to the shuttle check valve and through the internal drilling to:

Detent Regulating Valve

Flow Control Valve Spool

Load Sensing (Pilot) Line

On tractors with fixed displacement hydraulic pumps the load sensing line pressure from gallery 'D' acts on the end of the combining valve moving the valve to the right. The return to sump port in the priority valve is now closed and the main hydraulic and auxiliary pump pressure oil is directed to the remote control valve inlet port 'A'.

On tractors with the variable displacement CCLS hydraulic pump the load sensing line signals the pump to increase flow which is directed to inlet port 'A' at the pressure required to move the load connected to port G.

Pump pressure oil flows from Port 'A' to passage 'B' through:–

(i) Flow Control Spool Holes

(ii) Load Check Valve

(iii) Flow Control Restrictor

The volume of oil entering passage 'B' and flowing to the lift Port 'G' is determined by the flow control restrictor setting which is manually pre–set.

Exhaust oil from the lift cylinder drop port 'H' now returns to reservoir through oil gallery 'E'.

When the cylinder is fully extended, the pump supply oil pressure increases until the detent regulating valve opens. Pump pressure oil moves the detent spool against the detent spring and releases the clamping effort of the detent balls on the end of the control valve spool. The centering spring now moves the spool back to the neutral position.

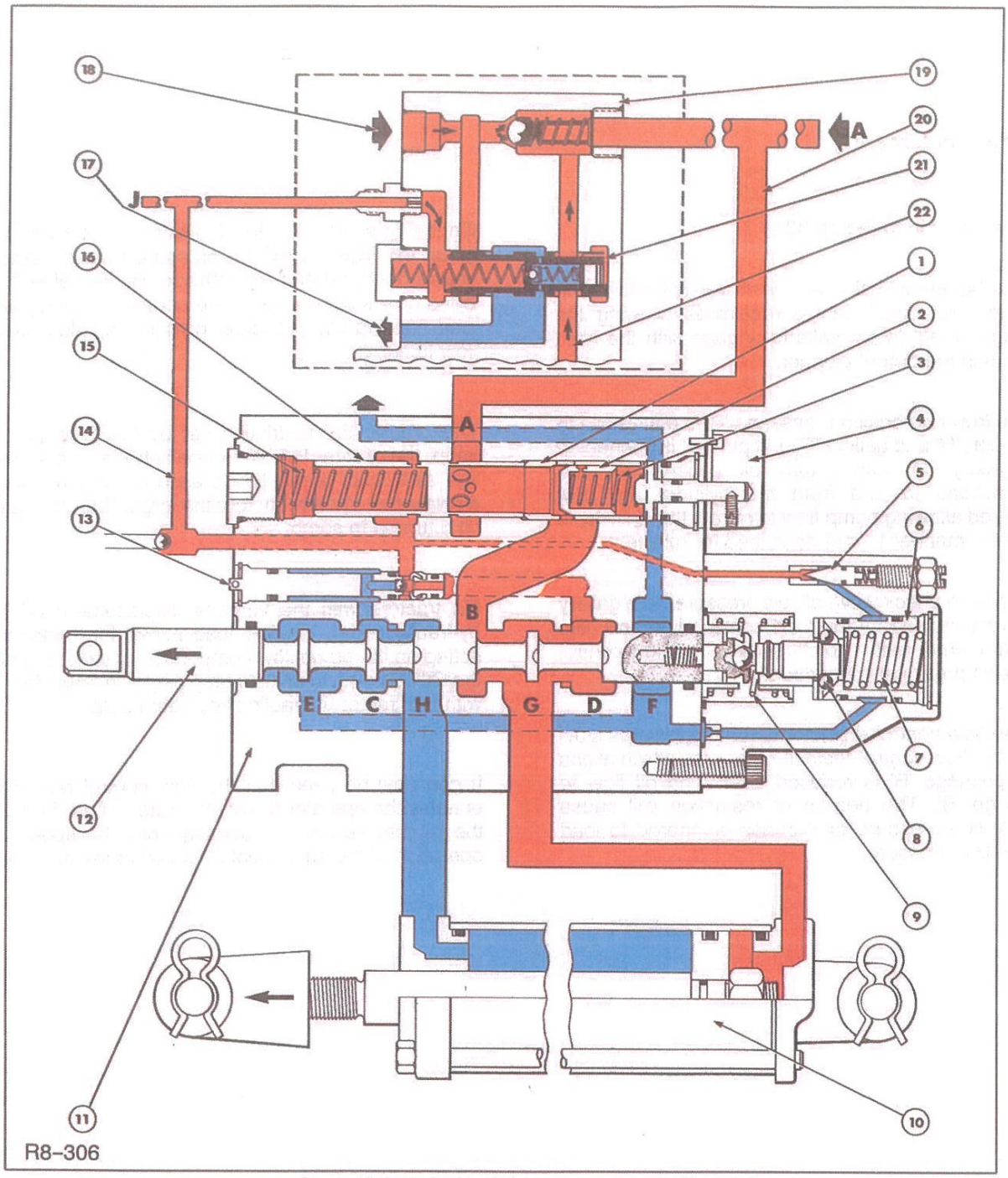

Single Remote Control Valve Operation–Raising

320

Pump Pressure Oil

Exhaust Oil

1. Flow Control Restrictor
2. Load Check Valve
3. Check Valve Spring
4. Flow Control Knob
5. Detent Regulating Valve
6. Detent Spool
7. Detent Plunger and Spring
8. Detent Balls
9. Centering Spring
10. External Cylinder
11. Valve Body
12. Control Valve Spool
13. Shuttle Check Valve
14. Load Sense Line (Pilot Line)
15. Flow Control Spring
16. Flow Control Spool
17. Return to Sump*
18. Auxiliary Pump Supply*
19. Hydraulic Priority Valve Assembly*
20. Supply to Remote Valve
21. Combining (Sequencing) Valve*
22. Main Pump Supply via Combining Valve*

*Tractors with Fixed Displacement Hydraulic Pump Only

For Tractors Fitted with Variable Displacement CCLS Hydraulic Pump

A = CCLS Pump Supply

B = CCLS Pump Load Sensing Line

Oil Flow In Lowering

With reference to Figure 321.

When the remote valve lever is moved to the lowering position the spool moves rearwards allowing the spring loaded detent balls to engage with the front groove in the detent plunger.

In the lowering position, passage 'B' is connected to drop port 'H' and gallery 'C'. Lift port 'G' is connected to gallery 'D' and return oil gallery 'F'. The connections to and from the cylinder are now reversed allowing pump flow to retract the cylinder in a similar manner to that described for raising.

The shuttle check valve allows pressure from gallery 'C' to be sensed by the load sensing line and also operate the detent regulating valve and flow control spool as previously described.

As the flow control restrictor is rotated towards slow flow, the flow control restrictor slot area which aligns with passage 'B' is reduced, restricting oil flow to passage 'B'. The degree of restriction will cause supply line pressure to increase compared to load sense line pressure.

On tractors with the fixed displacement hydraulic pump the high supply line pressure from the pump acts on the right hand end of the combining valve. The valve now moves against the combined spring and load sensing line pressure, diverting surplus pump flow to sump.

The greater the restriction set by the flow control knob, the greater the difference between the supply line and load sense line pressures and on fixed displacement pump tractors the larger the volume of oil returned to sump.

On tractors with the variable displacement CCLS hydraulic pump, the low load sense line pressure acting on the pump flow compensating valve signals the CCLS pump to adjust pump output in accordance with the tractor hydraulic circuit demands.

It can now be seen that the flow control restrictor enables the operator to vary the rate of flow through the remote valves and consequently the speed of operation of the equipment attached to the remotes.

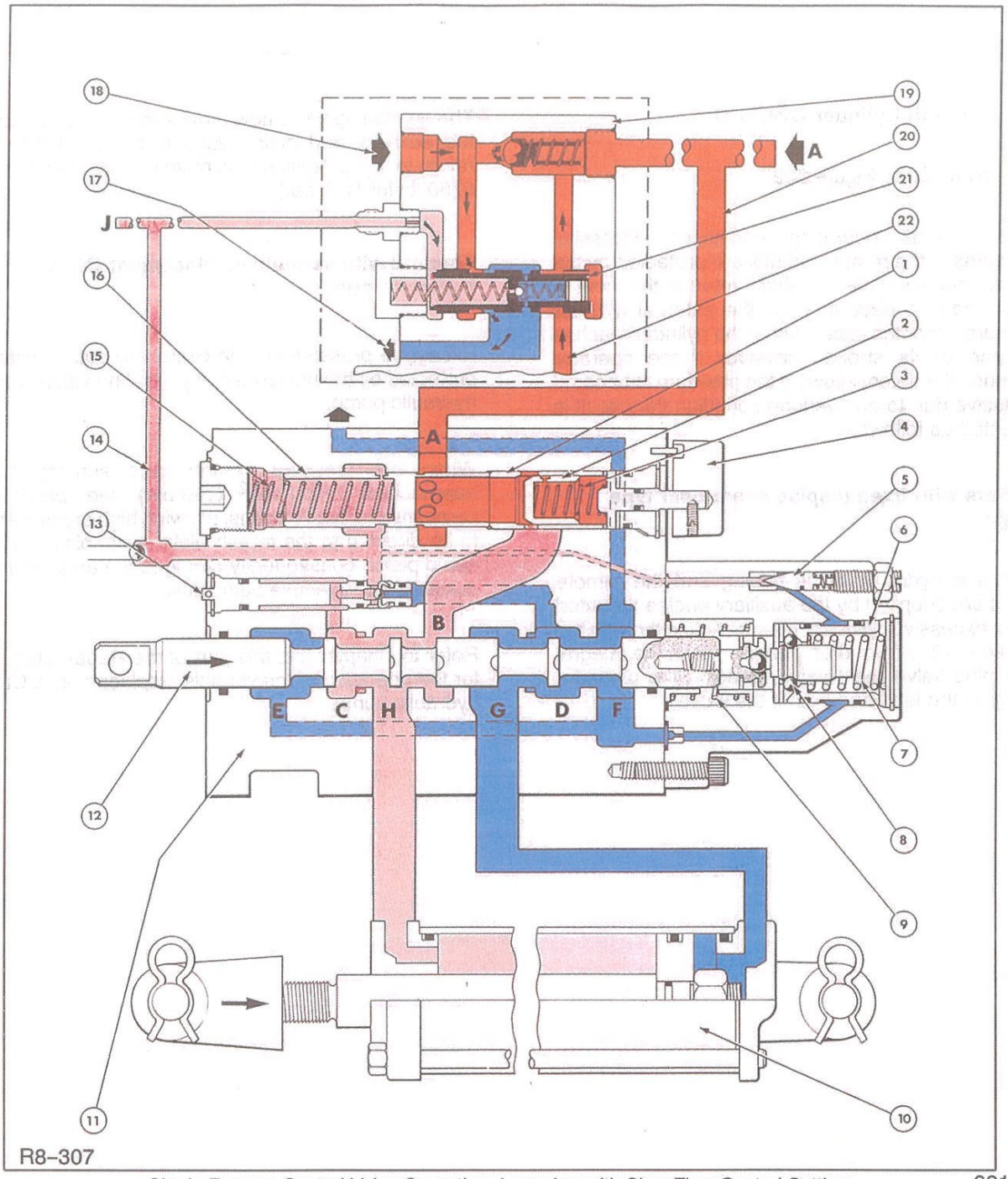

Single Remote Control Valve Operation–Lowering with Slow Flow Control Setting 321

Pump Pressure Oil | Reduced Oil Flow | Exhaust Oil

1. Flow Control Restrictor
2. Load Check Valve
3. Check Valve Spring
4. Flow Control Knob
5. Detent Regulating Valve
6. Detent Spool
7. Detent Plunger and Spring
8. Detent Balls
9. Centering Spring
10. External Cylinder
11. Valve Body
12. Control Valve Spool
13. Shuttle Check Valve
14. Load Sense Line (Pilot Line)
15. Flow Control Spring
16. Flow Control Spool
17. Return to Sump*
18. Auxiliary Pump Supply*
19. Hydraulic Priority Valve Assembly*
20. Supply to Remote Valve
21. Combining (Sequencing) Valve*
22. Main Pump Supply via Combining Valve*

*Tractors with Fixed Displacement Hydraulic Pump Only

For Tractors Fitted with Variable Displacement CCLS Hydraulic Pump

A = CCLS Pump Supply

B = CCLS Pump Load Sensing Line

Oil Flow With Cylinder Overload

With reference to Figure 322.

Under normal operating conditions excessive pressures in the remote circuits are protected by the detent regulating valve which returns the control valve spool to neutral when the external cylinder pressure becomes excessive or the cylinder reaches the end of its stroke. However if the operator overrides the detent allowing the pressure to become excessive due to an overload condition the circuit is protected as follows:–

Tractors with fixed displacement gear type pump:

When the hydraulic lift is raising and the remote valves are supplied by the auxiliary engine mounted pump, excessive cylinder pressure acting through the load sense line from drop port 'H' opens the integral combining valve relief valve reducing the pressure acting on the left hand end of the valve.

The combining valve now moves to the left, allowing the auxiliary and main hydraulic pump oil flow to return to sump, limiting maximum remote pressure to 2750 lbf/in^2 (192 bar).

Tractors with variable displacement CCLS hydraulic pump:

Excessive pressures in the circuit are automatically protected by the pressure compensating valve in the hydraulic pump.

When the pressure in the load sensing line approaches 2700 lbf/in^2 (186 bar) the pressure compensating valve opens, allowing high pressure oil to be directed to the swash plate servo piston. The servo piston consequently changes the angle of the swash plate to reduce pump flow.

Refer to Chapter 2 in this part of the Repair Manual for the operation of the variable displacement CCLS hydraulic pump.

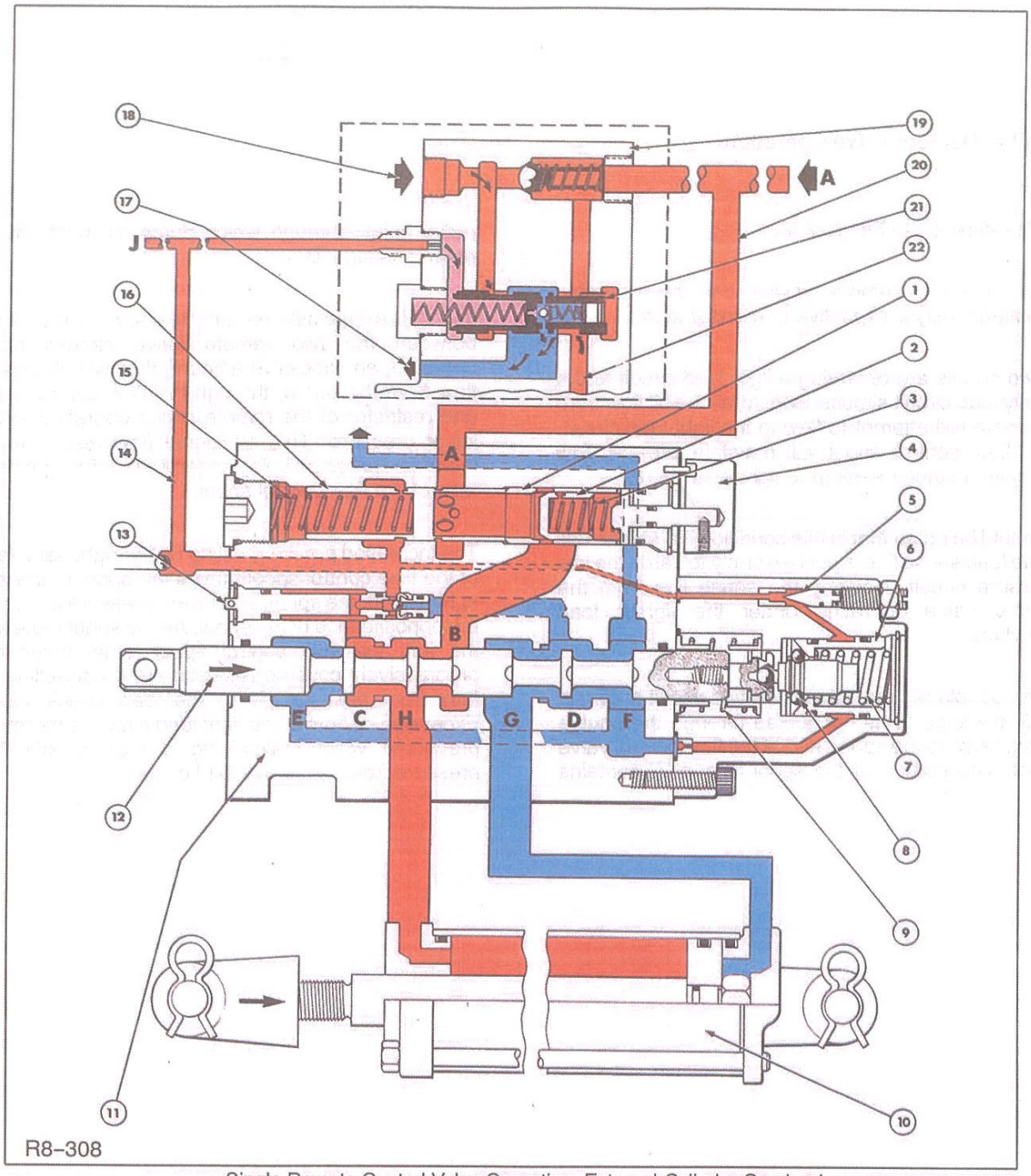

Single Remote Control Valve Operation–External Cylinder Overload 322

Pump Pressure Oil | Reduced Oil Flow | Exhaust Oil

1. Flow Control Restrictor
2. Load Check Valve
3. Check Valve Spring
4. Flow Control Knob
5. Detent Regulating Valve
6. Detent Spool
7. Detent Plunger and Spring
8. Detent Balls
9. Centering Spring
10. External Cylinder
11. Valve Body
12. Control Valve Spool
13. Shuttle Check Valve
14. Load Sense Line (Pilot Line)
15. Flow Control Spring
16. Flow Control Spool
17. Return to Sump*
18. Auxiliary Pump Supply*
19. Hydraulic Priority Valve Assembly*
20. Supply to Remote Valve
21. Combining (Sequencing) Valve*
22. Main Pump Supply via Combining Valve*

*Tractors with Fixed Displacement Hydraulic Pump Only

For Tractors Fitted with Variable Displacement CCLS Hydraulic Pump

A = CCLS Pump Supply

B = CCLS Pump Load Sensing Line

Double Remote Valve Operation

With reference to Figure 323.

Two or more remote valves can be operated simultaneously irrespective of cylinder load.

If two spools are operating a light load circuit and a heavy load circuit simultaneously, all the oil flow from the valve will attempt to flow to the light load circuit. The flow control spool will maintain pre-set flow (manual restrictor setting) to light load circuit.

It should be noted that in this condition the shuttle ball in the load sense line is pushed firmly towards the low pressure circuit, isolating the sense line from the remote valve operating under the lighter load condition.

In the double remote valve operation circuit shown in 323, passage 'B' is connected through the shuttle check valve to the spring end of the flow control valve spool. The portion of the spool in port 'A' contains radial holes, through which pump oil must flow to reach passage 'B'.

If there is a large difference in the operating pressures between the two remote valve circuits being operated, an excessive amount of oil will attempt to flow from the pump, through the flow control spool and restrictor of the remote circuit operating at the lower pressure. This additional flow results in an increased pressure being generated on the right hand face of the flow control spool.

The increased pressure acting on the right hand face of the flow control spool moves the spool to the left, against both the spring and lower pressure acting on the opposite face of the spool. As the spool moves to the left, the flow control spool radial holes are progressively covered restricting and controlling oil flow from passage 'A' to the load check valve. Excessive oil flow to the light load circuit is therefore prevented while maintaining a high supply line pressure from the heavy load circuit.

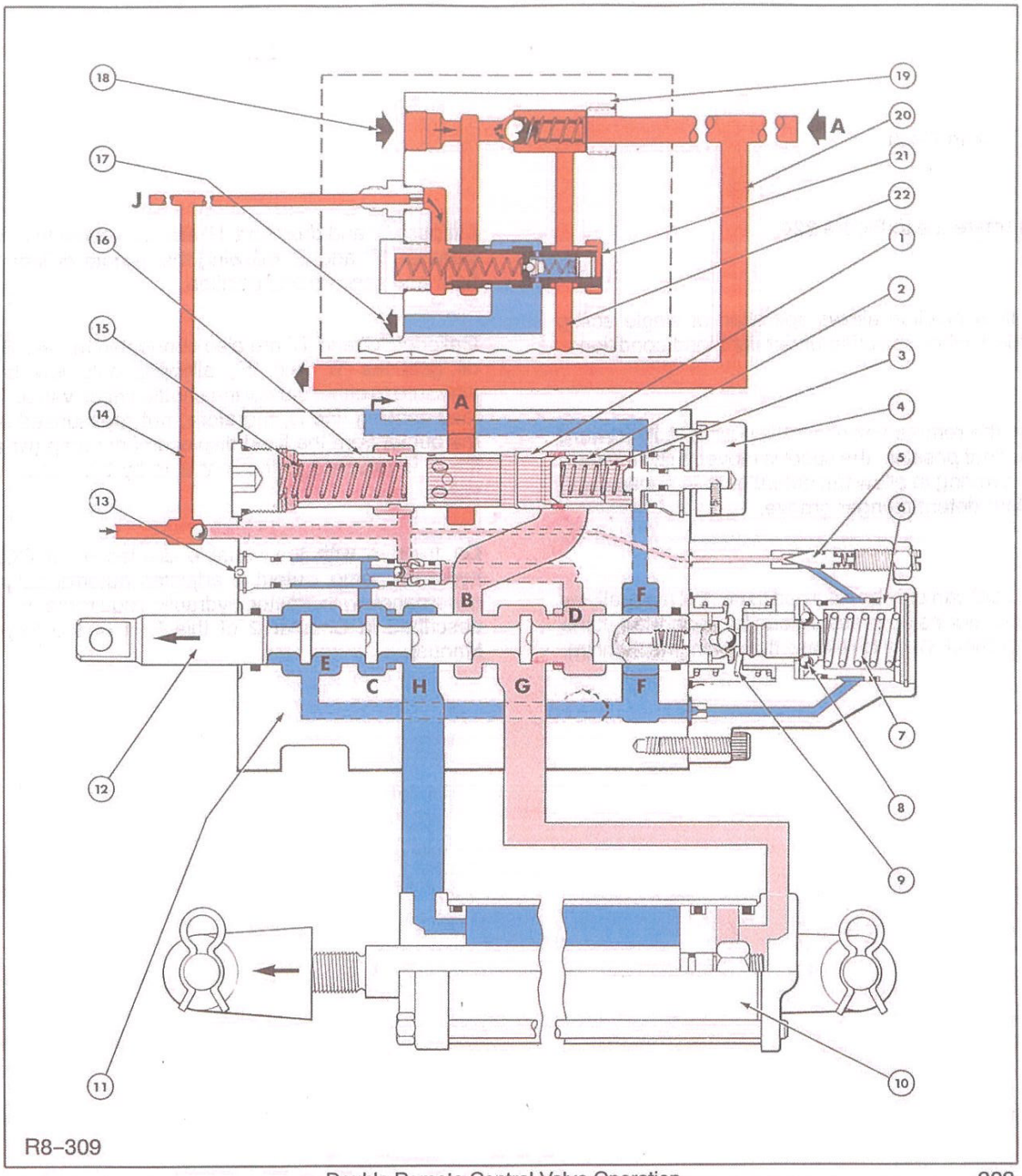

Double Remote Control Valve Operation 323

Pump Pressure Oil | Controlled Oil Flow | Reduced Oil Flow | Exhaust Oil

1. Flow Control Restrictor
2. Load Check Valve
3. Check Valve Spring
4. Flow Control Knob
5. Detent Regulating Valve
6. Detent Spool
7. Detent Plunger and Spring
8. Detent Balls
9. Centering Spring
10. External Cylinder
11. Valve Body
12. Control Valve Spool
13. Shuttle Check Valve
14. Load Sense Line (Pilot Line)
15. Flow Control Spring
16. Flow Control Spool
17. Return to Sump*
18. Auxiliary Pump Supply*
19. Hydraulic Priority Valve Assembly*
20. Supply to Remote Valve
21. Combining (Sequencing) Valve*
22. Main Pump Supply via Combining Valve*

*Tractors with Fixed Displacement Hydraulic Pump Only

For Tractors Fitted with Variable Displacement CCLS Hydraulic Pump

A = CCLS Pump Supply **B** = CCLS Pump Load Sensing Line

Oil Flow In Float

With reference to Figure 324.

The float position allows operation of single acting cylinders when lowering under light load conditions.

When the remote valve lever is pushed fully forward to the float position, the spool is moved fully rearward past lowering to allow the detent balls to engage with the float detent plunger groove.

The spool can only be returned to neutral manually by the operator as no pressure can be generated at the shuttle check valve to release the detent mechanism.

Lift port 'G' and drop port 'H' are connected to return galleries 'F' and 'E' allowing the remote cylinder to float and assume any position.

Galleries 'C' and 'D' are also connected to the return oil galleries 'E' and 'F', allowing only low back pressure to either side of the shuttle check valve. The load sensing line is, therefore, not pressurised and the output from the fixed displacement pump (where fitted) is returned to the rear axle by the combining valve.

On tractors with the variable displacement CCLS hydraulic pump, output is adjusted automatically in accordance with tractor hydraulic requirements, as described in Chapter 2 of this Part of the Repair Manual.

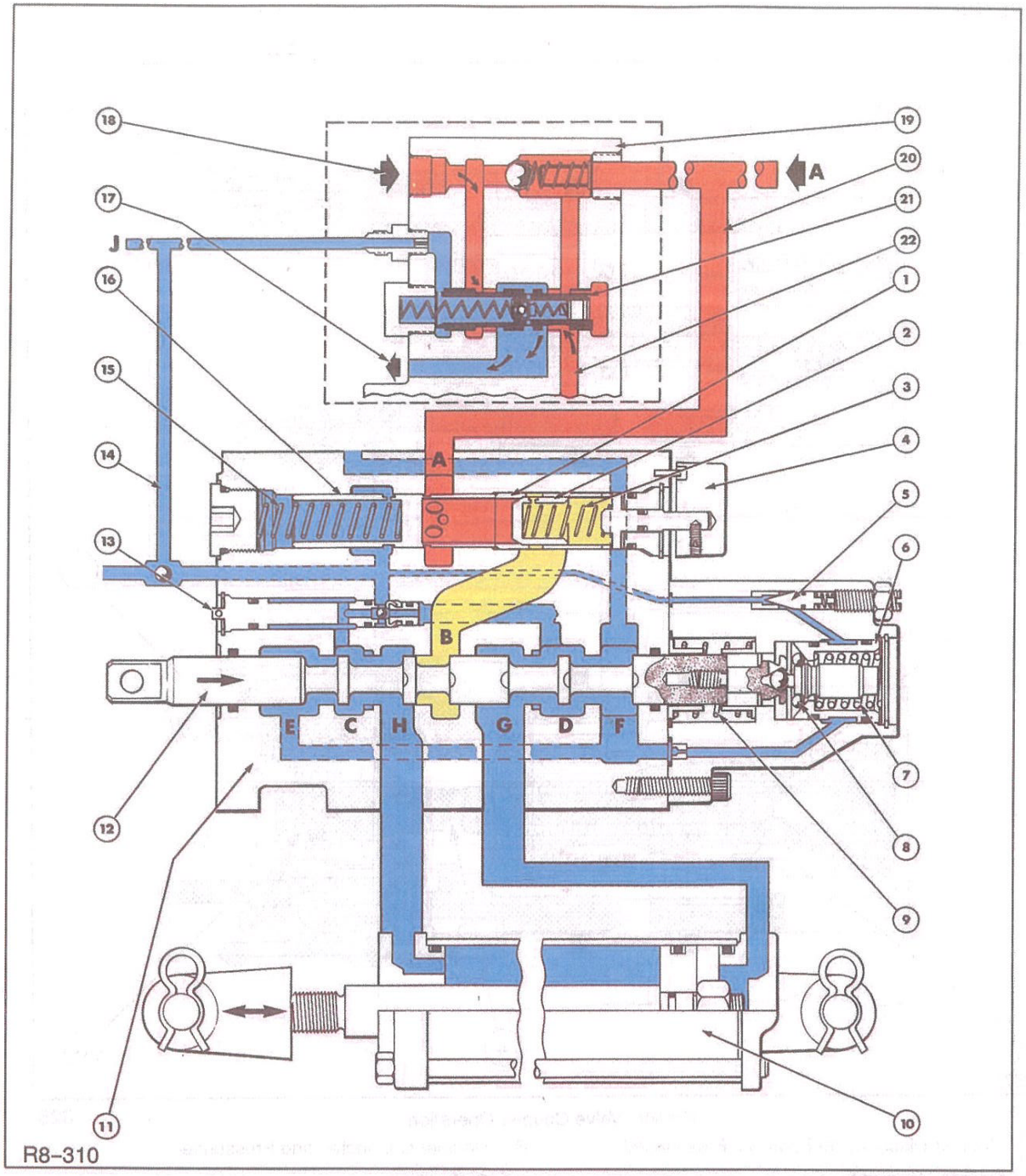

Single Remote Control Valve Operation–Float 324

Pump Pressure Oil | Exhaust Oil | Trapped Oil

1. Flow Control Restrictor
2. Load Check Valve
3. Check Valve Spring
4. Flow Control Knob
5. Detent Regulating Valve
6. Detent Spool
7. Detent Plunger and Spring
8. Detent Balls
9. Centering Spring
10. External Cylinder
11. Valve Body
12. Control Valve Spool
13. Shuttle Check Valve
14. Load Sense Line (Pilot Line)
15. Flow Control Spring
16. Flow Control Spool
17. Return to Sump*
18. Auxiliary Pump Supply*
19. Hydraulic Priority Valve Assembly*
20. Supply to Remote Valve
21. Combining (Sequencing) Valve*
22. Main Pump Supply via Combining Valve*

*Tractors with Fixed Displacement Hydraulic Pump Only

For Tractors Fitted with Variable Displacement CCLS Hydraulic Pump

A = CCLS Pump Supply

B = CCLS Pump Load Sensing Line

COUPLERS

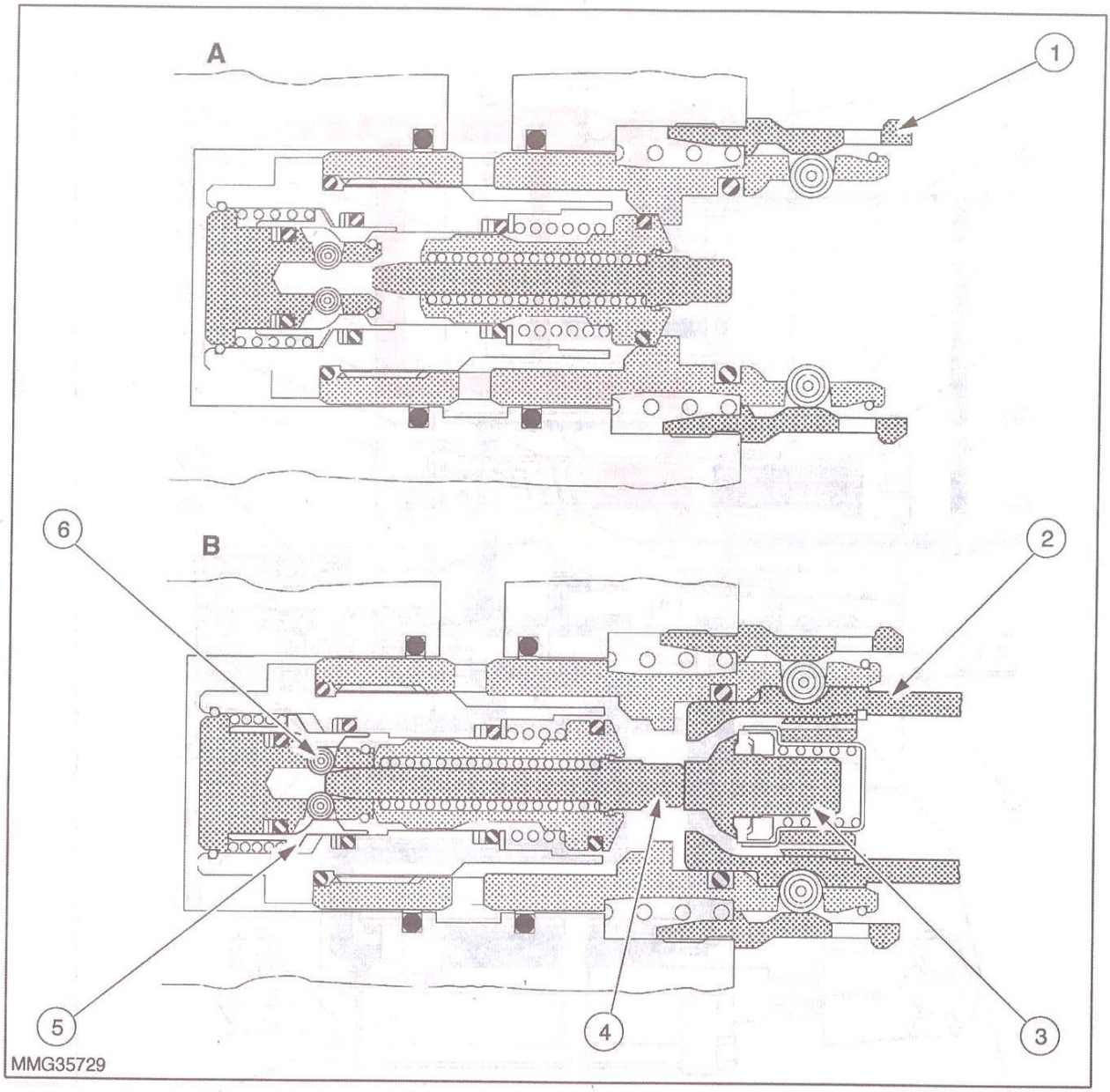

Remote Valve Coupler Operation 325

A Coupler Disconnected and Not Pressurised

1. Coupler Assembly
2. Auxiliary Equipment Hose Connector
3. Hose Connector Check Valve

B Coupler Connected and Pressurised

4. Probe
5. Locking Sleeve
6. Locking Balls

Figure 325, shows a cross section through the remote couplers.

When the coupler is disconnected from the auxiliary equipment, the valve is spring loaded in the closed position.

When equipment is connected and the remote valve pressurised, high pressure oil forces the hose connector check valve off its seat and the spring loaded probe remains in contact with the face of the check valve, Stage B, Figure 325.

Oil pressure within the coupler now pushes the locking sleeve rearward, forcing the locking balls against the end of the probe, preventing the probe from moving rearwards.

With the probe locked in the forward position the hose connector check valve is held in the 'Fully Open' position even when the remote valve is working at a low operating pressure.

OVERHAUL

CONTROL VALVE HOUSING

REMOVAL

7. Disconnect the control linkage (2) and tubes (1, 3 & 4), Figure 326 and remove control valve and coupling assembly from the tractor.

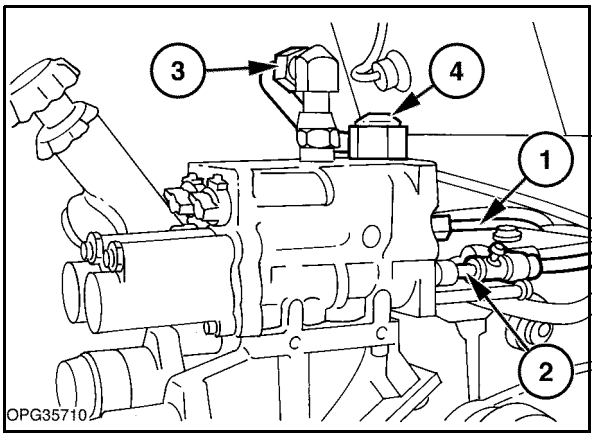

326

DISASSEMBLY

1. Separate control valve (1) from coupling assembly (2).

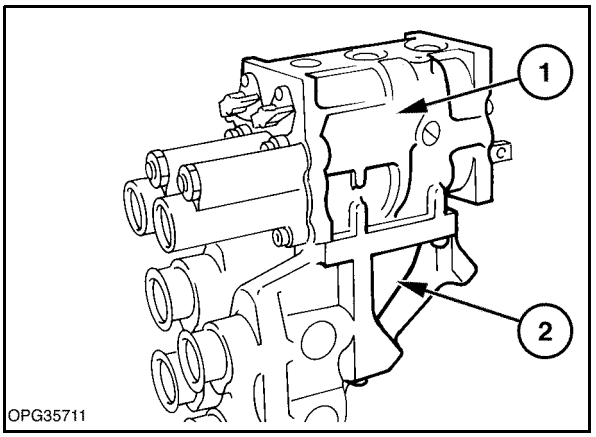

327

2. Remove end cap (3) with 'O' ring (4) and remove flow control spool (1) and spring (2) from rear of housing, Figure 328.

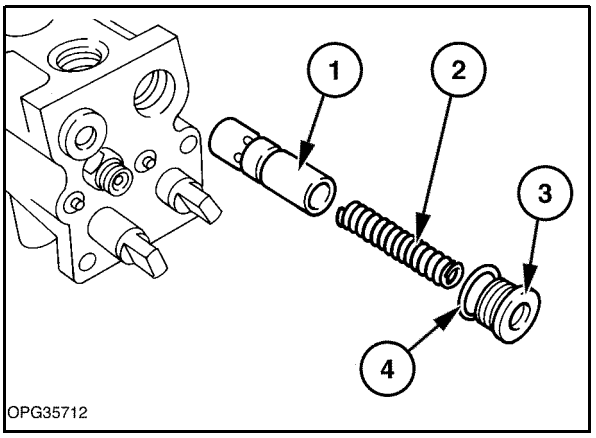

328

3. Remove flow control knob (2). push restrictor end plug (3) as far as possible into housing and remove spiral circlip (1), Figure 329.

NOTE: *The plug can only be pushed into the housing by approximately 0.040 in (1 mm) and is just sufficient to allow removal of the spiral circlip.*

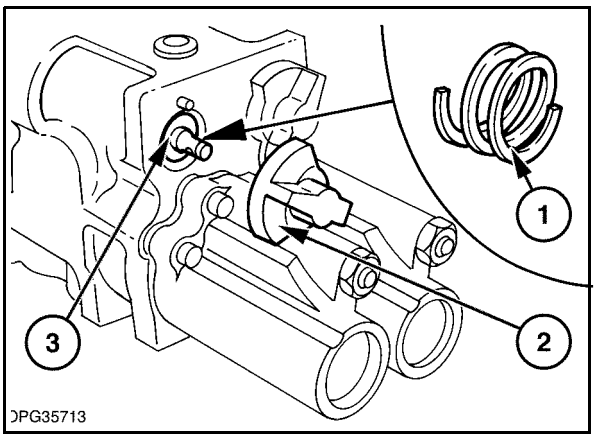

329

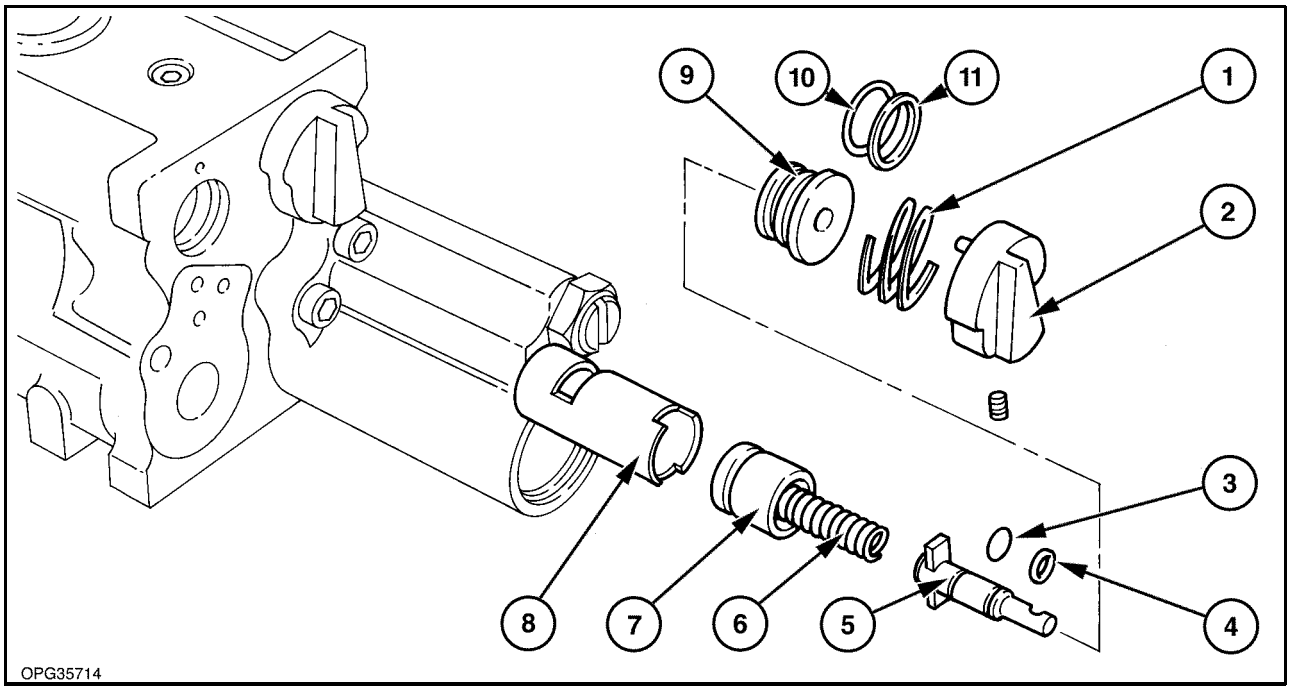

Flow Control Restrictor

330

1. Spiral Circlip
2. Knob
3. 'O' Ring
4. Back-up Ring
5. Shaft
6. Spring
7. Load Check Valve
8. Flow Restrictor
9. Restrictor End Plug
10. 'O' Ring
11. Back-up Ring

4. Remove flow control restrictor, Figure 330.

5. Remove fixing screws and pull detent assembly (1) with a sharp jerk from the end of the control spool (3), Figure 331. Note the 'O' ring (2)

6. Using a suitable press, push end cap sufficiently into detent housing to enable removal of snap ring. Carefully release press and allow the spring within the detent housing to eject the plug, Refer to Figure 332.

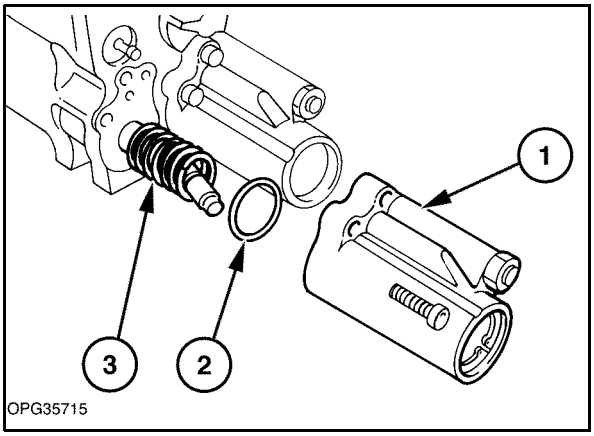

331

7. Disassemble detent assembly and detent regulating valve components taking care to collect the nine detent balls.

8. Compress centering spring and remove detent plunger from shaft. Refer to Figure 333.

9. Unscrew shaft from main spool.

10. To prevent damage to the housing due to paint on the linkage end of the main control spool, remove main spool from opposite end of housing to that which the centering spring was located.

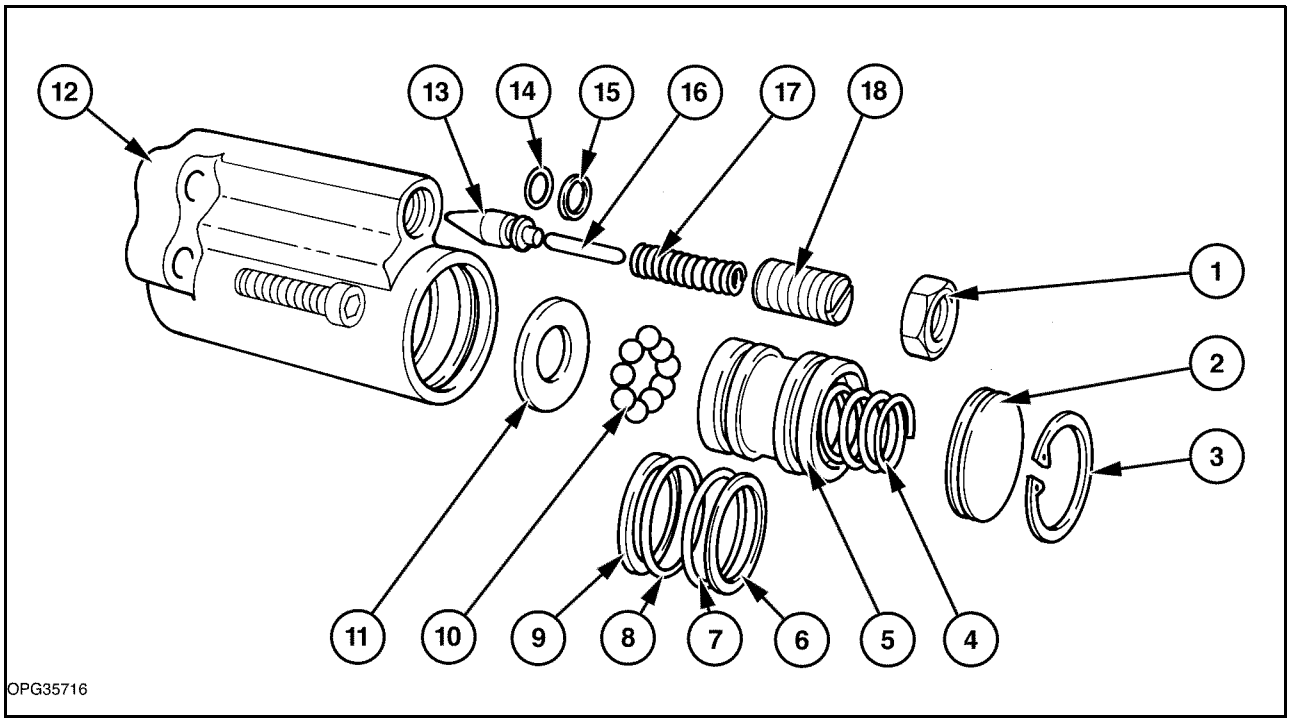

Detent Mechanism 332

1. Lock Nut
2. End Cap
3. Snap Ring
4. Spring
5. Detent Spool
6. Back–up Ring
7. ‘O’ Ring
8. ‘O’ Ring
9. Back–up Ring
10. Detent Balls
11. Washer
12. Detent Housing
13. Valve
14. ‘O’ Ring
15. Back–up Ring
16. Rod
17. Spring
18. Adjuster

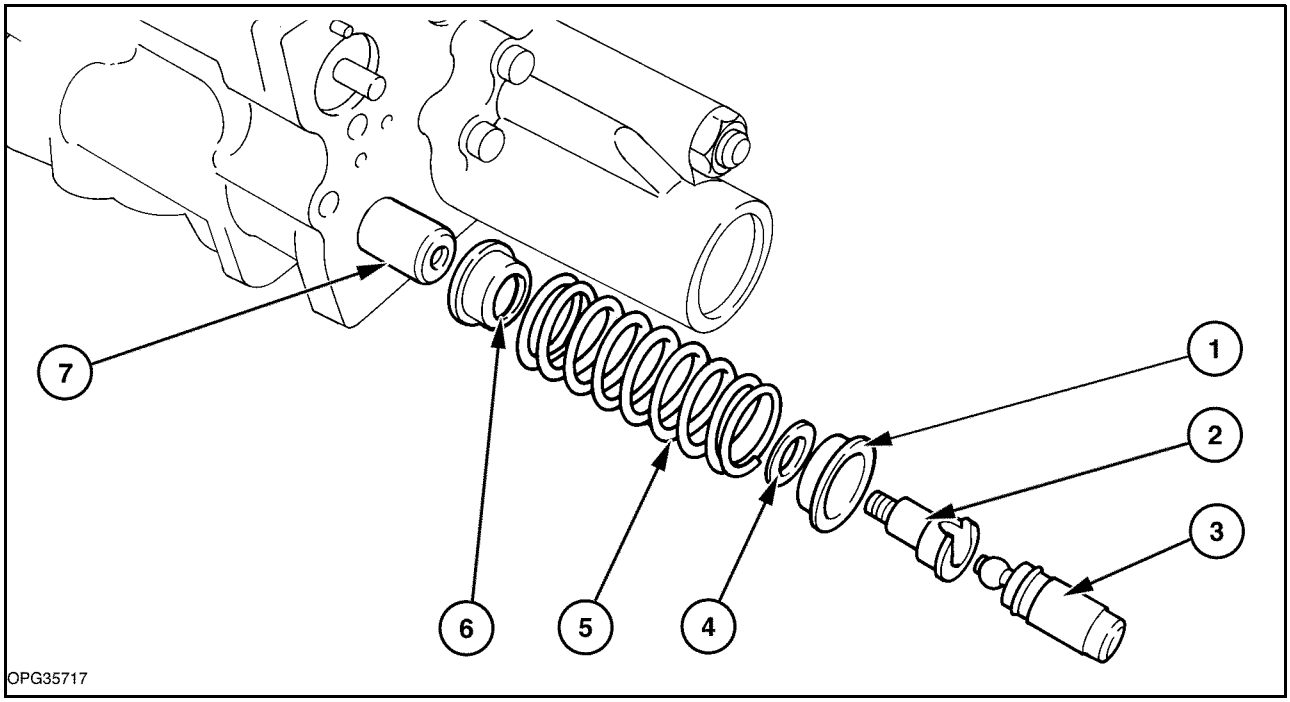

Centering Spring Assembly 333

1. Retainer
2. Shaft
3. Detent Plunger
4. Washer
5. Spring
6. Retainer
7. Main Spool

11. Remove spiral circlip and using a small rod withdraw shuttle check valve, Figure 334.

Shuttle Check Valve Removal

1. Shuttle Check Valve
2. 'O' Ring
3. Back–up Ring
4. Rod (to assist removal of valve)
5. 'O' Rings

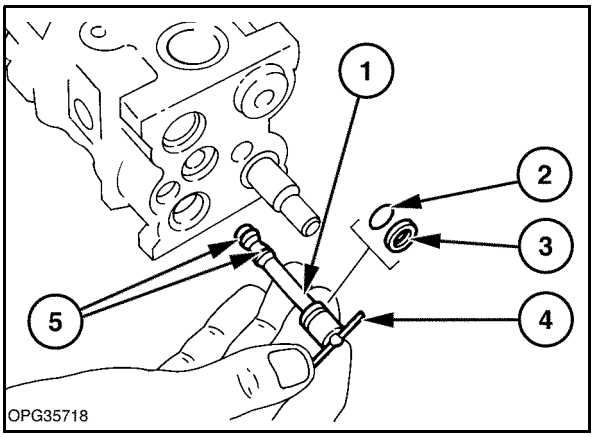

334

12. Remove priority check valve, Figure 335.

Priority Check Valve

1. Ball
2. Seat
3. 'O' Rings

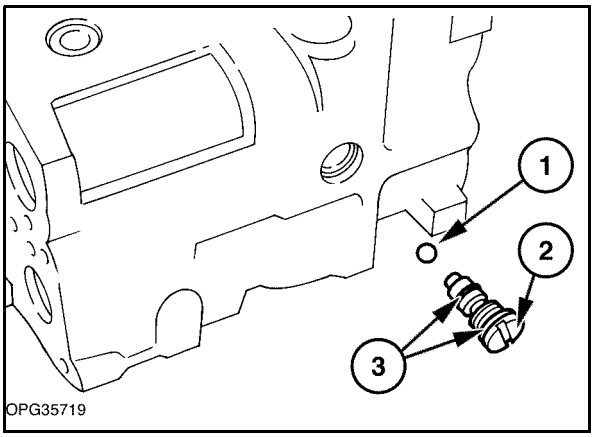

335

INSPECTION AND RE–ASSEMBLY

1. Inspect all components for wear or damage. The main spool, flow control spool and restrictor assembly are matched to the valve body and are not available separately.

2. Replace all 'O' rings and back–up rings.

3. Re–assemble with reference to Figure 338 and install housing 'O' ring seals as follows:–

   Position the 'O' (1) ring into the detent end of the housing, Figure 336.

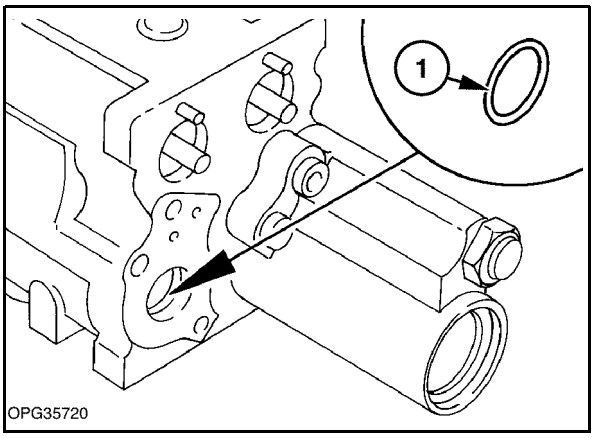

336

   Insert the spool (2) from the opposite end of the housing to position shown in Figure 337, then install remaining 'O ring (1).

4. Apply New Holland Thread Lock and Seal, Part No. 82995773 to the thread of the detent shaft. Assemble centering spring and screw shaft onto main spool, tightening to a maximum torque of 5 lbf ft (6.7 Nm).

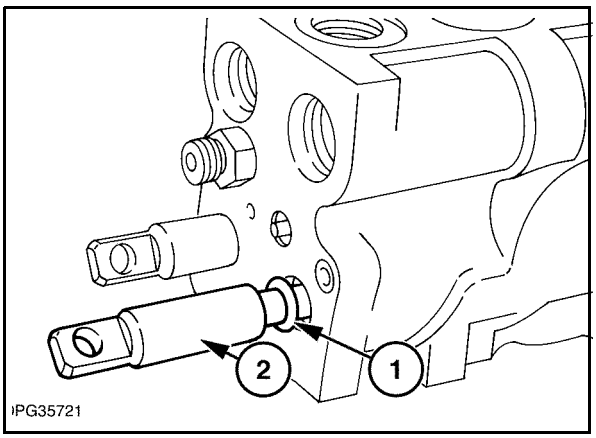

337

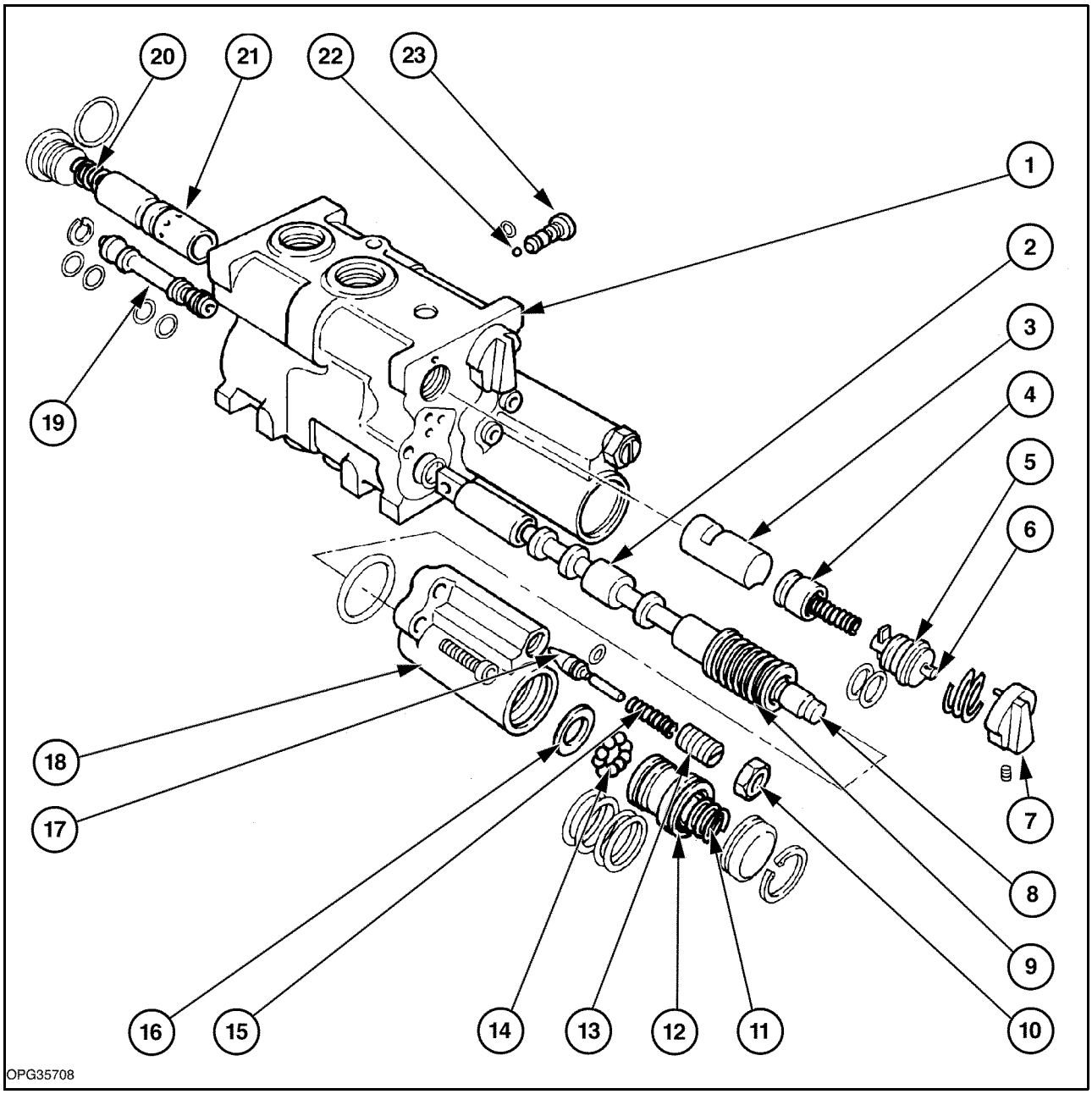

338

Double Spool Remote Control Valve

1. Valve Body
2. Spool
3. Flow Restrictor*
4. Load Check Valve
5. Flow Restrictor End Plug
6. Flow Restrictor Control Shaft
7. Flow Restrictor Control Knob
8. Detent Shaft
9. Spool Centering Spring
10. Locknut
11. Detent Piston Spring
12. Detent Piston
13. Detent Valve Spring Adjuster
14. Detent Balls (9 off)
15. Detent Regulating Valve Spring
16. Spacer
17. Detent Regulating Valve
18. Detent Housing
19. Shuttle Check Valve
20. Flow Control Spring
21. Flow Control Spool
22. Priority Check Valve Ball (double spool only)
23. Priority Check Valve Retainer

** The flow restrictor **must** be installed with the large slot positioned 180^0 to that shown in illustration.

5. Re-connect the valve housing (1) to the coupler assembly (2), ensuring that the 'O' ring seals between the coupler and valve have not been omitted. Tighten the bolts to a torque of 11-15 lbf ft (15-20 Nm).

If the remote valve couplers require overhaul refer to Page 4-277. It is not necessary to remove the valve assembly from the tractor in order to overhaul the couplers.

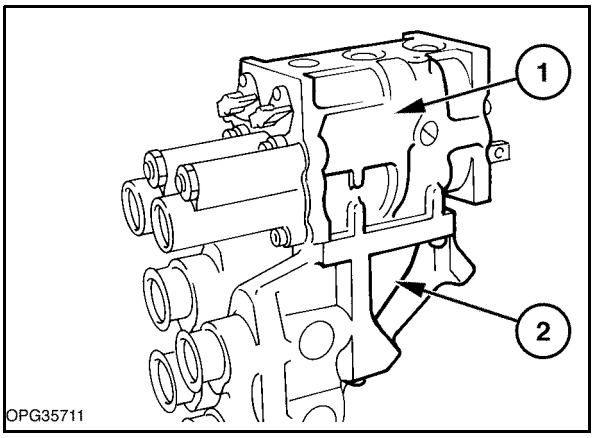

339

INSTALLATION

1. Assemble the valve to the tractor tightening the bolts to a torque of 20-26 lbf ft (27-35 Nm).

2. Reconnect the pipework and control lever cables.

REMOTE VALVE COUPLER

DISASSEMBLY

1. Using a suitable 'C' spanner, Tool FNH00095 or prefabricated tool as shown in Figure 340, unscrew coupling.

   When using the tool shown in Figure 340, engage the reduced diameter of the locking screws into three of the round holes on the outer diameter of the coupler and using a standard wrench unscrew the coupler.

2. Disassemble the coupling as shown in Figure 341.

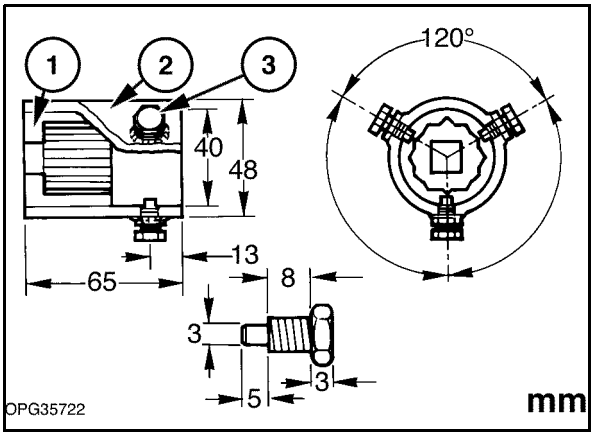

Tool for Removing Coupler 340

1. 30 mm Socket (welded inside item 2
2. Sleeve
3. Hardened Locking Screw (3 off) made from 6 mm Bolts

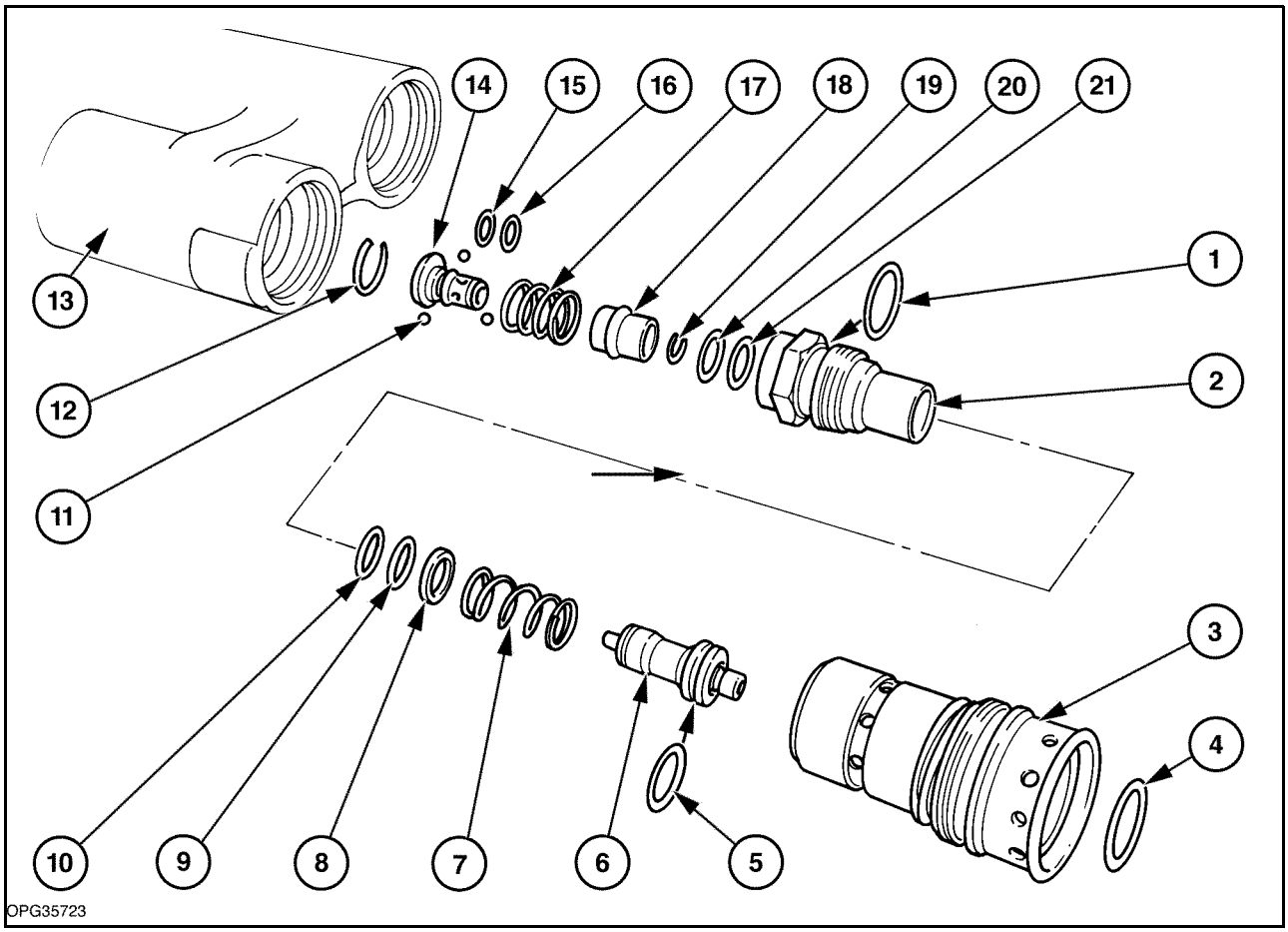

Remote Valve Coupler

341

1. 'O' Ring
2. Adaptor
3. Sleeve Assembly
4. Front Sealing Ring
5. 'O' Ring
6. Probe Assembly
7. Spring
8. Washer
9. 'O' Ring
10. Back-up Ring
11. Locking Balls
12. Retaining Ring
13. Coupler Housing
14. Locking Body
15. Back-up Ring
16. 'O' Ring
17. Spring
18. Locking Sleeve
19. Retaining Ring
20. Back-up Ring
21. 'O' Ring

3. Remove the two 'O' rings (3) and slipper seals (2) from the coupler housing (1), Figure 342.

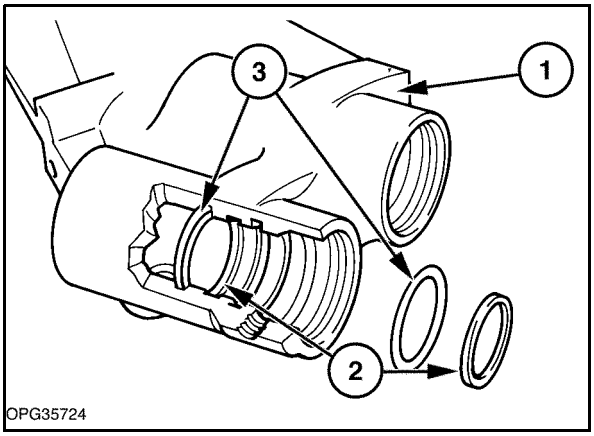

342

RE-ASSEMBLY

Inspect components for wear or damage and replace all seals which are serviced.

1. Re-assemble the coupler using the disassembly procedure in reverse.

2. Lightly oil two new 'O' ring seals and install into the coupler housing grooves.

3. Shape the new slipper seals as shown in Figure 343 and locate inside 'O' ring seals. Use a clean finger to smooth the seals into position.

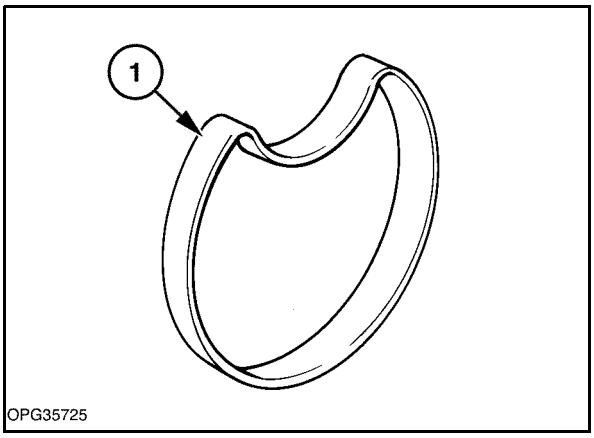

343

4. Where available insert slipper seal tool No FT 8611 (1), into the housing (2) and rotate back and forth. This operation slightly stretches and seats the seals in order that the coupling can be installed.

5. Lightly oil coupler and carefully install into the housing.

NOTE: *Extreme care must be exercised as the coupler engages and slightly expands the slipper seal. This is particularly important if the slipper seal tool is not available.*

6. Tighten the sleeve to a torque of 60 lbf ft (82 Nm).

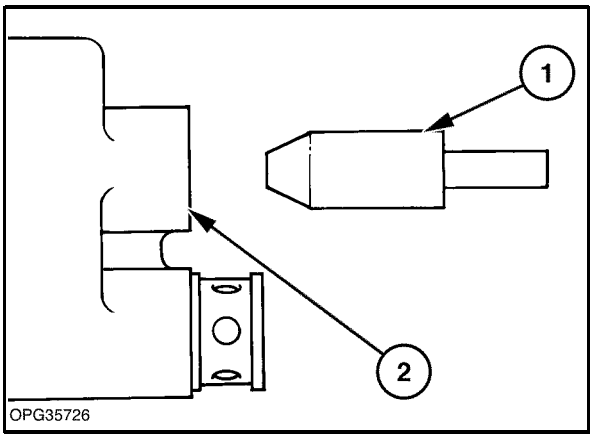

344

CABLE ADJUSTMENT

Adjust cable as follows:-

1. Move control lever to 'Raise' position and check that control valve spool (3) is fully extended from housing.

2. Loosen cable clamp (1), Figure 345 and slide cable outer sleeve (2) away from valve until all slack in the cable has been removed.

3. Tighten clamp and check for correct operation of the valve in 'Raise' Neutral' 'Lower' and 'Float' positions.

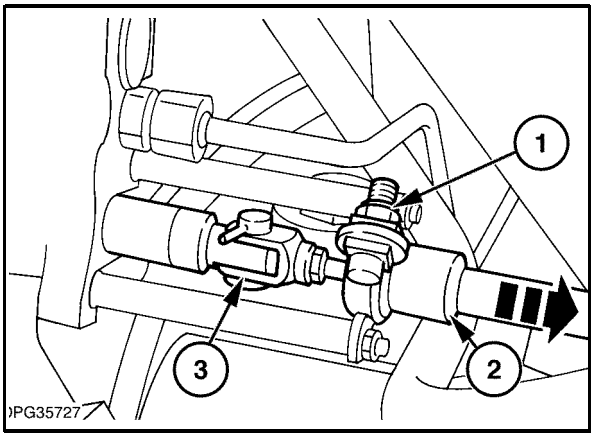

345

PRESSURE TESTING

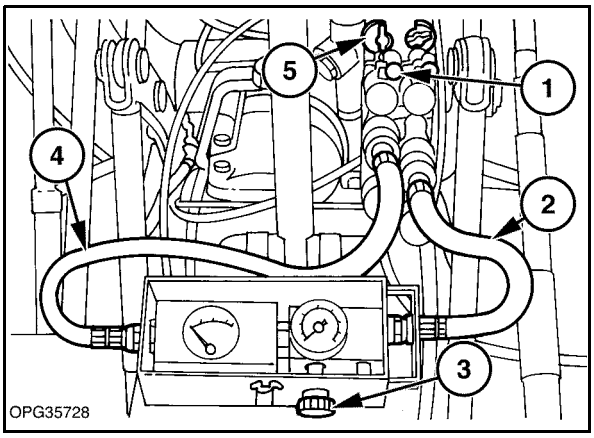

346

After servicing the detent regulating valve (1) or if the control levers and spool are returning to neutral prematurely, the detent regulating valve should be tested as follows:–

1. Install inlet hose of a flowmeter (4) into lift coupler of valve to be tested and set flow control knob (5) to maximum flow, Figure 346.

2. Install return hose from flow meter (2) into lift coupler of another remote valve on tractor.

3. Ensure load valve on flow meter (3) is fully open.

4. Start tractor and set engine speed to 1700 rev/min.

5. Push remote control valve operating lever of remote valve connected to flowmeter 'Return' hose, to 'Float' position, fully forward.

6. Pull lever of remote control valve to be tested, fully rearwards, to the extend position.

7. Adjust load valve on flow meter until pressure is at 2000 lbf/in^2 (140 bar) and run engine until hydraulic oil is at an operating temperature of 170°F (75°C).

8. With lever of remote control valve to be tested in the cylinder extend position slowly close the flowmeter load valve while observing the flowmeter pressure gauge.

   The pressure should steadily rise until the detent regulating valve opens, at which point the needle will fluctuate and the handle return to the neutral position. Note the gauge reading immediately prior to the needle fluctuation. The reading should be within the specified value 2150–2350 lbf/in^2 (148–162 bar).

9. If the reading is not to specification, adjust the 'return to neutral' pressure as follows:–

   Loosen locknut on detent regulating valve.

   Turn detent regulating valve adjusting screw to change pressure setting. Half a turn of screw is equivalent to approximately 450 lbf/in^2 (32 bar).

ASSIST RAMS

SPECIFICATIONS

MAXIMUM LIFT CAPACITY

Tractors with Fixed Displacement Gear Type Hydraulic Pump @ 2650 lbf/in^2 (183 bar)

Test results to OECD criteria–links horizontal

		TS80, TS85, TS90, TS95, TS100	TS110
Without Assist Rams			
at link ends	lb	6350	n/a
	kg	2880	n/a
24 in. to rear of link ends	lb	4910	n/a
	kg	2227	n/a
With One Assist Ram			
at link ends	lb	9370	9370
	kg	4250	4250
24 in. to rear of link ends	lb	7080	7080
	kg	3211	3211
With Two Assist Rams			
at link ends	lb	n/a	12300
	kg	n/a	5579
24 in. to rear of link ends	lb	n/a	9420
	kg	n/a	4273

Tractors with Fixed Displacement Gear Type Hydraulic Pump @ 2385 lbf/in^2 (164 bar)

Test results to SAE criteria–links horizontal

		TS80, TS85, TS90, TS95, TS100	TS110
Without Assist Rams			
24 in. to rear of link ends	lb	4200	n/a
	kg	1905	n/a
With One Assist Ram			
24 in. to rear of link ends	lb	6210	6210
	kg	2817	2817
With Two Assist Rams			
24 in. to rear of link ends	lb	n/a	8240
	kg	n/a	3728

MAXIMUM LIFT CAPACITY

Tractors with Variable Displacement Closed Centre Load Sensing (CCLS) Hydraulic Pump @ 2800 lbf/in^2 (193 bar)

Test results to OECD criteria–links horizontal

		TS90	TS100	TS110
Without Assist Rams				
at link ends	lb	6712	6712	n/a
	kg	3045	3045	n/a
24 in. to rear of link ends	lb	5190	5190	n/a
	kg	2354	2354	n/a
With One Assist Ram				
at link ends	lb	9904	9904	9904
	kg	4492	4492	4492
24 in. to rear of link ends	lb	7484	7484	7484
	kg	3395	3395	3395
With Two Assist Rams				
at link ends	lb	n/a	n/a	13001
	kg	n/a	n/a	5897
24 in. to rear of link ends	lb	n/a	n/a	9957
	kg	n/a	n/a	4516

Tractors with Variable Displacement Closed Centre Load Sensing (CCLS) Hydraulic Pump @ 2800 lbf/in^2 (193 bar)

Test results to SAE criteria–links horizontal

Without Assist Rams		TS90	TS100	TS110
24 in. to rear of link ends	lb	4439	4439	n/a
	kg	2014	2014	n/a
With One Assist Ram				
24 in. to rear of link ends	lb	6564	6564	n/a
	kg	2978	2978	n/a
With Two Assist Rams				
24 in. to rear of link ends	lb	n/a	n/a	8710
	kg	n/a	n/a	3950

TORQUES

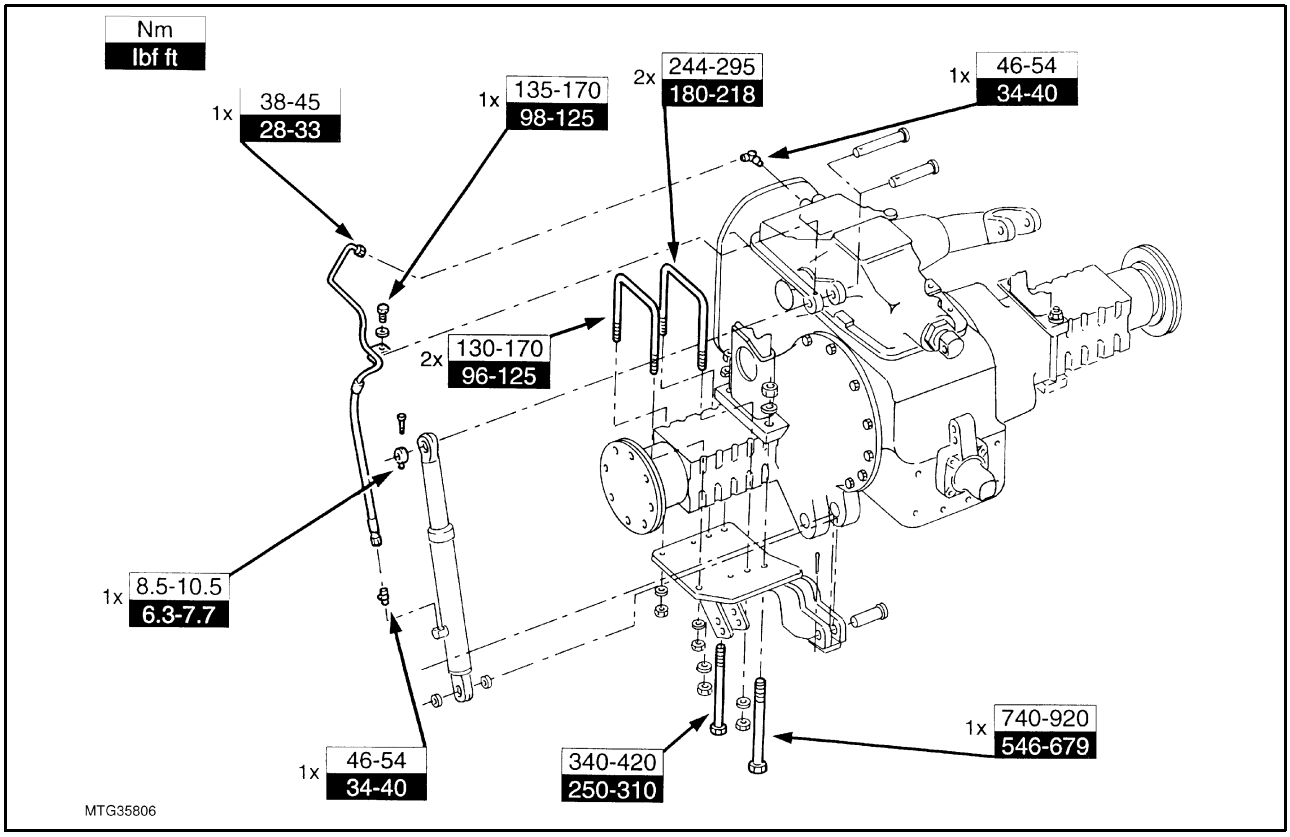

Single Hydraulic Assist Ram and Bracket Installation (With and Less Cab)

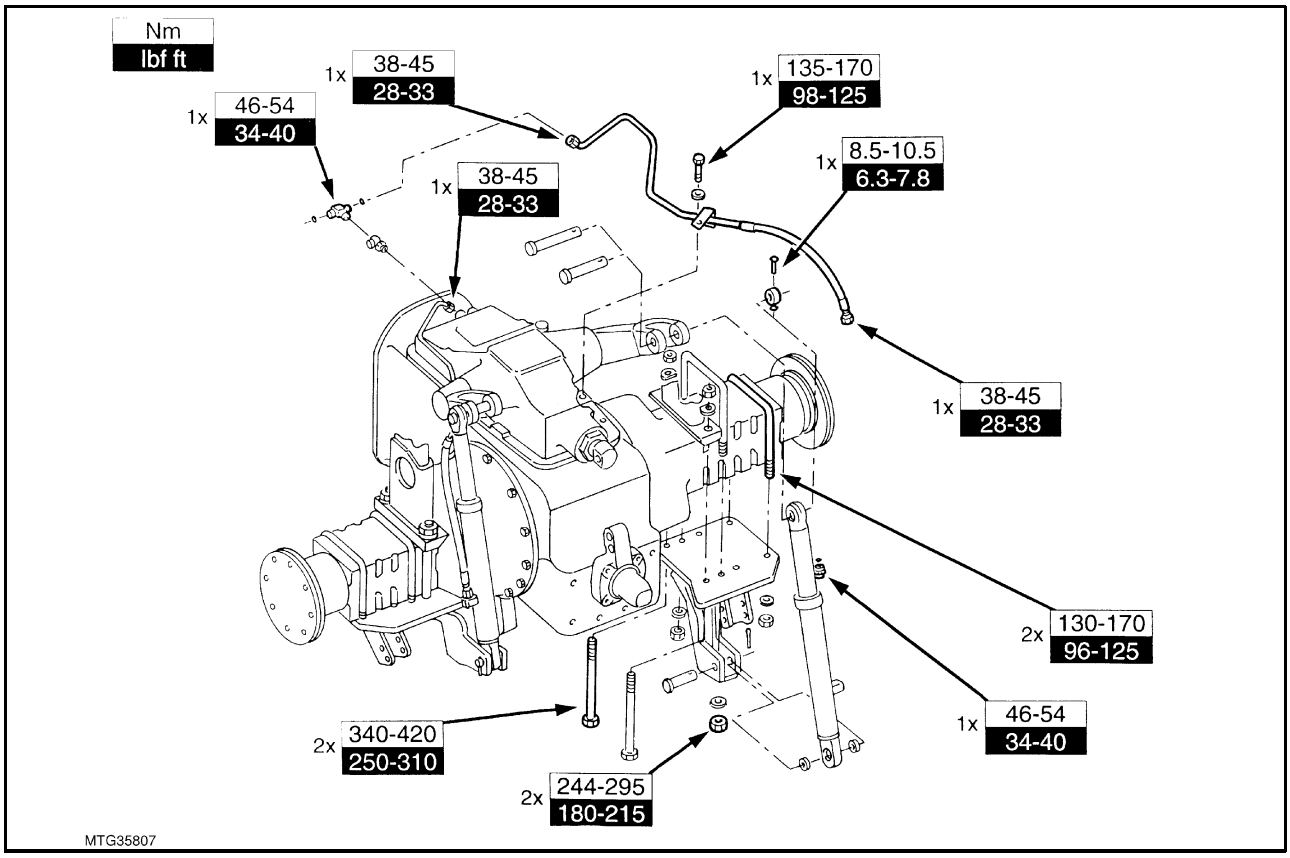

Double Hydraulic Assist Ram and Bracket Installation (With and Less Cab)

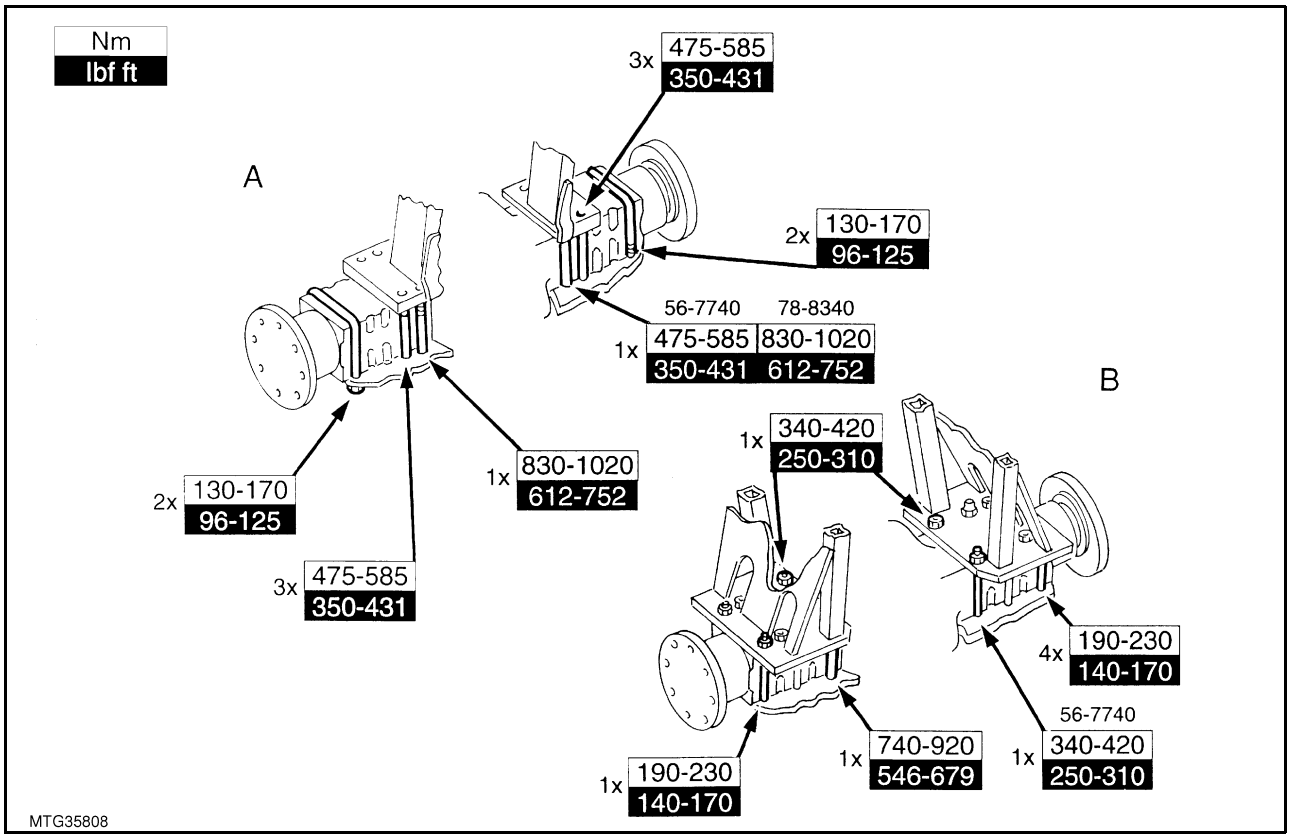

Assist Ram Mounting Bracket
(Two and Four Post Roll Over Protection Frame)

A. Two Post Roll Over Protection Frame

B. Four Post Roll Over Protection Frame

DESCRIPTION AND OPERATION

In order to increase the hydraulic lift capacity, TS series tractors may be installed with either one or two assist rams.

Assist rams (1), which can be either factory or dealer installed, attach to a bracket (2) beneath the rear axle and the end of the lift arm (3), Figure 347.

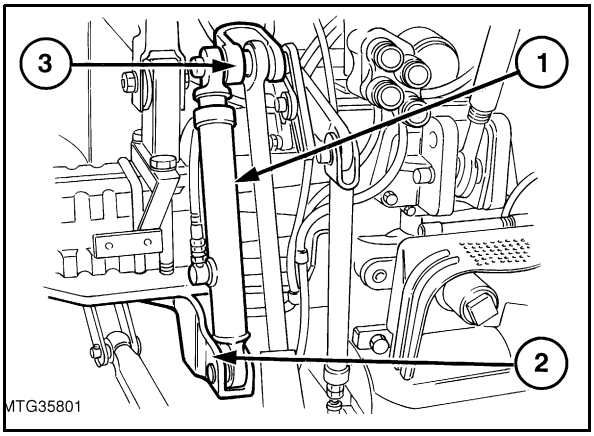

347

The hydraulic supply to each ram (1) and (3) is taken from a port at the front of the hydraulic lift cover (2), Figure 348, which connects directly with the supply gallery to the lift cylinder.

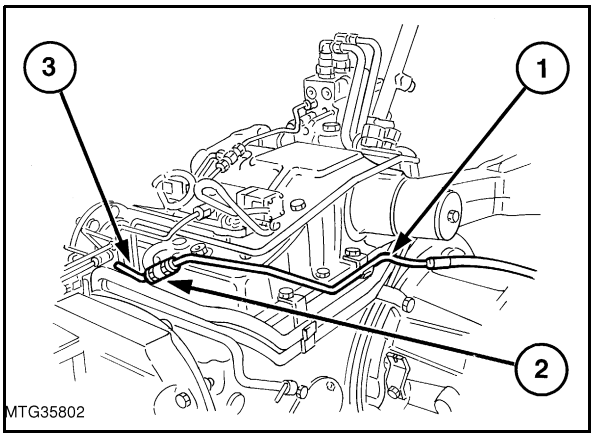

348

OVERHAUL

REMOVAL

1. Fully lower lift arms.
2. Disconnect hydraulic connection to assist ram (3).
3. Remove pin attaching assist ram to bracket (2).
4. Remove collar on pin attaching assist ram to lift arm (4) and withdraw ram (1) from tractor.

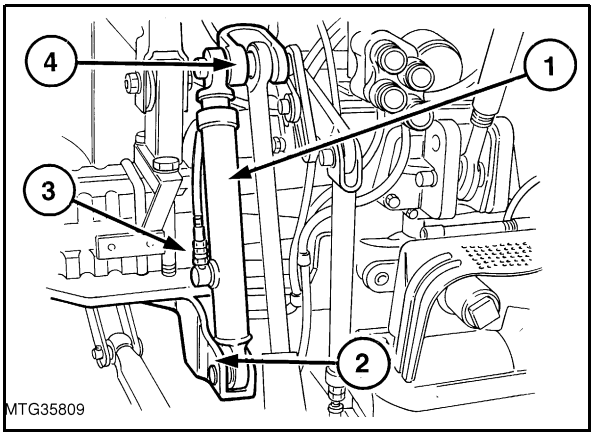

349

DISASSEMBLY

1. Grip assist ram end cap in vice and using suitable lever unscrew cylinder, Figure 350.

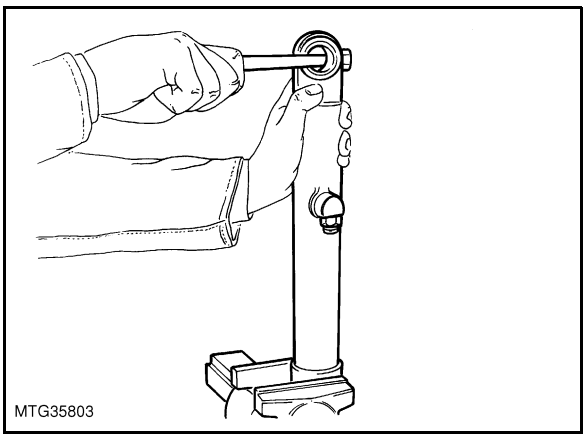

350

2. Remove guides from end of cylinder rod, Figure 351.

3. Slide end cap from rod and remove seal components, Figure 352.

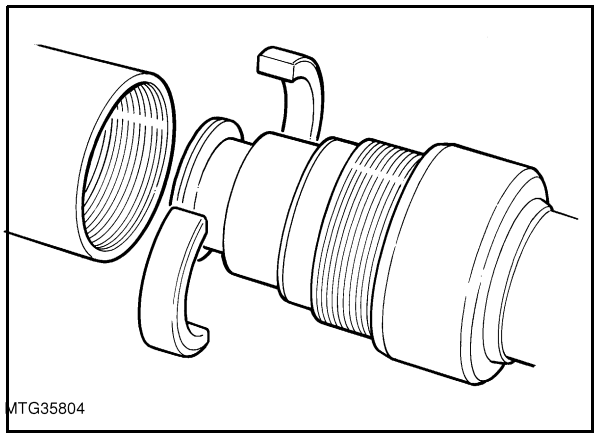

351

INSPECTION AND REPAIR

1. Replace all seals

2. Examine cylinder rod for burs, scratches and distortion.

3. Examine the bearing in the eye at each end of the assist ram and replace if worn. To remove bearings relieve the staking around the edge of the eye and press out using a hydraulic press.

4. When installing new bearings ensure they are fully seated and securely staked in three positions.

RE-ASSEMBLY

Re-assembly follows the disassembly procedure in reverse.

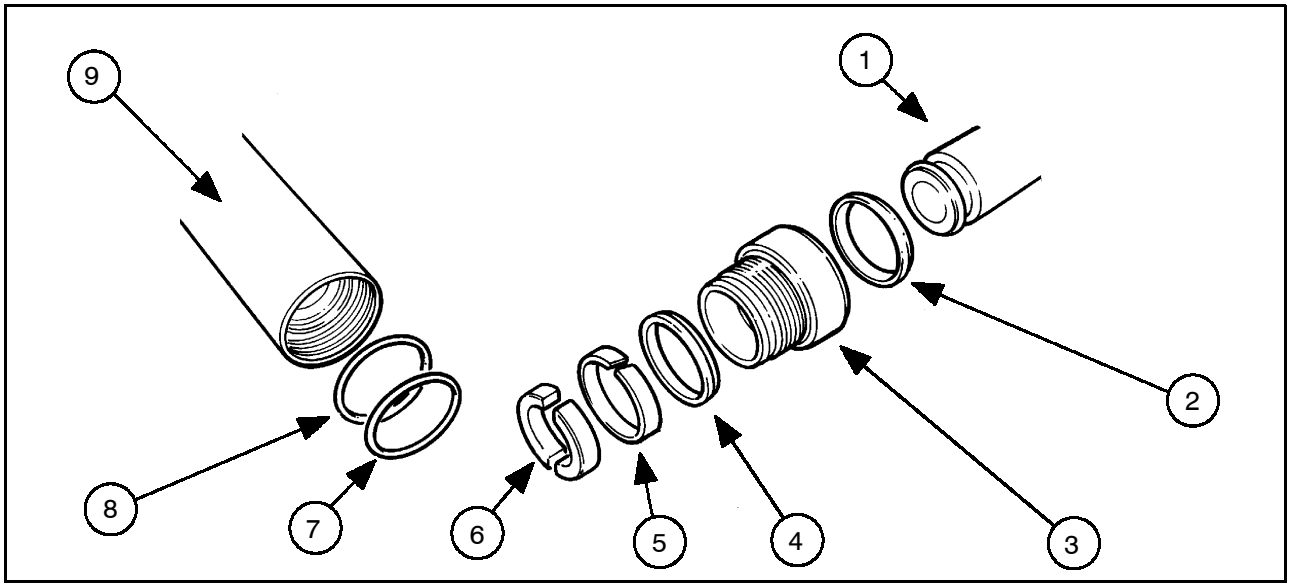

Assist Ram Assembly

352

1. Piston Rod
2. Wiper Seal
3. End Cap
4. Seal
5. Bushing
6. Guides
7. Support Ring
8. 'O' Ring Seal
9. Cylinder Barrel

HYDRAULIC LIFT ASSEMBLY WITH ELECTRONIC DRAFT CONTROL FOR TRACTORS WITH FIXED DISPLACEMENT HYDRAULIC PUMP

CAUTION: *Observe the following precautions when arc welding on tractors installed with electronic draft control*

- Where possible, disconnect the part or implement to be arc welded from the tractor.
- Disconnect both battery cables from the battery. Isolate the cable ends to avoid contact with each other and the tractor.
- Position the welder earth (ground) clamp as close to the welding area as possible.
- If welding is to be carried out in close proximity to the electronic draft control microprocessor then the microprocessor should be removed from the tractor.
- Never allow welding cables to lay on, near or across any electrical wiring or electronic component while welding is in progress.

SPECIFICATIONS

VALVE SETTINGS

Lift Cylinder Relief Valve	2850–3050 lbf/in^2 (197–210 bar)

GASKET SEALER

New Holland Gasket Sealant Part No.	82995770 (50 ml) 82995771 (300 ml)

ASC CONTROL VALVE SIZES

Colour	Inches	mm
Green	.6247–.6244	15.8674–15.8598
Yellow	.6244–.6241	15.8598–15.8521
Blue	.6241–.6238	15.8521–15.8445
White	.6238–.6235	15.8445–15.8369
Blue/White	.6235–.6232	15.8369–15.8293

TORQUES

= **Nm**

= **lbf ft**

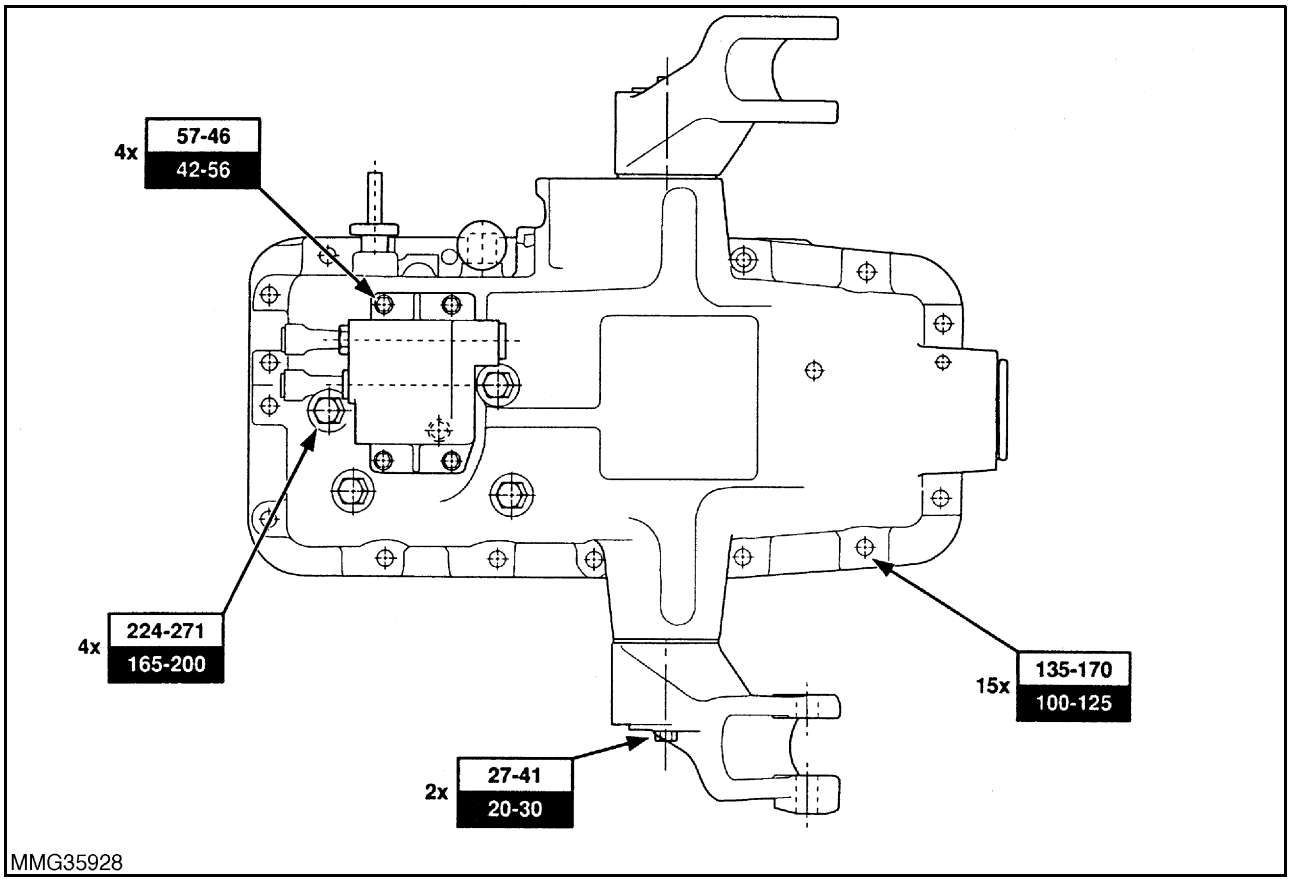

353

Lift Cylinder Relief Valve Torque 75-90 lbf ft (102-122Nm)

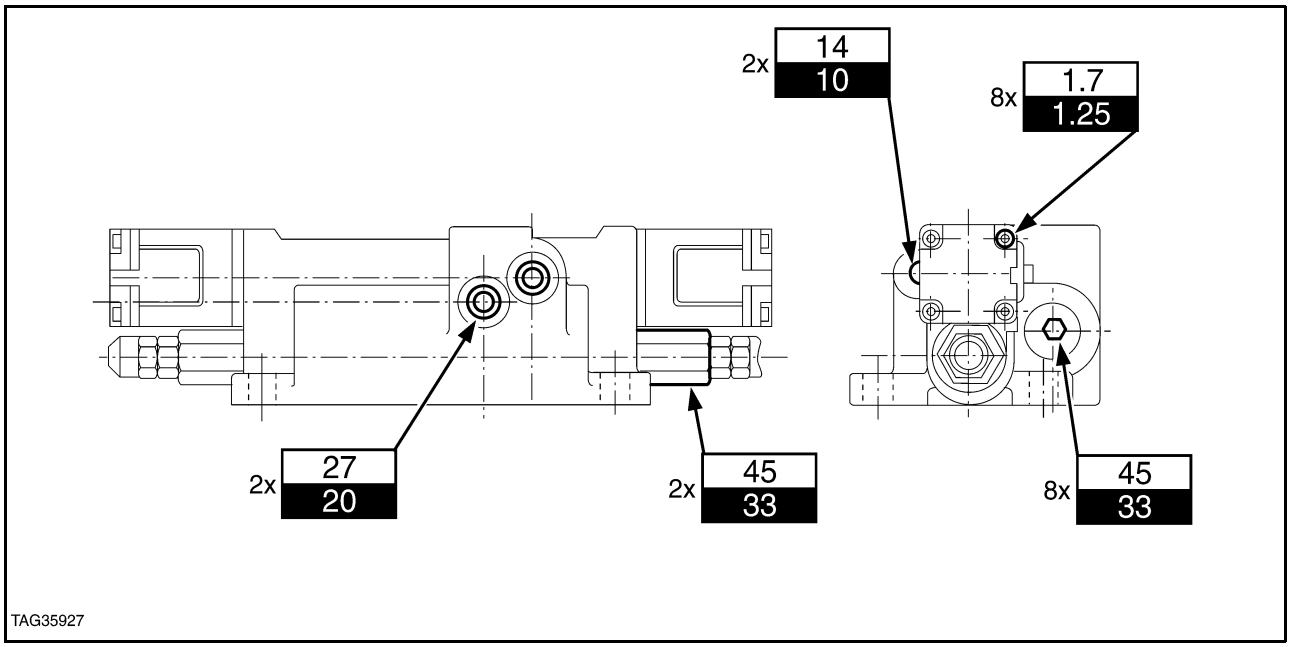

354

DESCRIPTION AND OPERATION

INTRODUCTION

The closed centre load sensing hydraulic draft control system described in this chapter relates to those tractors installed with electronic draft control and the fixed displacement hydraulic pump.

The location of all the components in this electronic draft control hydraulic system are shown in Figure 355 and Figure 356.

The principle of electronic draft control is to sense variations in implement draft using a load sensing pin in each lower link. A processor then translates these variations into electronic signals which operate a control valve to raise and lower the hydraulic links and maintain a constant draft loading.

In addition to maintaining a constant draft loading the system also provides a fully electro–hydraulic method of raising and lowering the hydraulic lift, eliminating the necessity for mechanical linkage between the operator controls, hydraulic control valve and hydraulic lift assembly.

The principal differences between this system and the electronic draft control system released for tractors equipped with the variable displacement closed centre load sensing hydraulic pump are as follows:–

- The fixed displacement Hydraulic Pump
- The priority/unload valve assembly, necessary to interface between the fixed displacement hydraulic pump, hydraulic lift assembly and auxiliary engine mounted pump and hydraulic control valves where fitted.
- The location of the hydraulic control valve on the tractor.
- The design of processor which is now connected to the system using two multi pin connectors and also controls the functions of the dual command clutches on the 24x24 transmission.

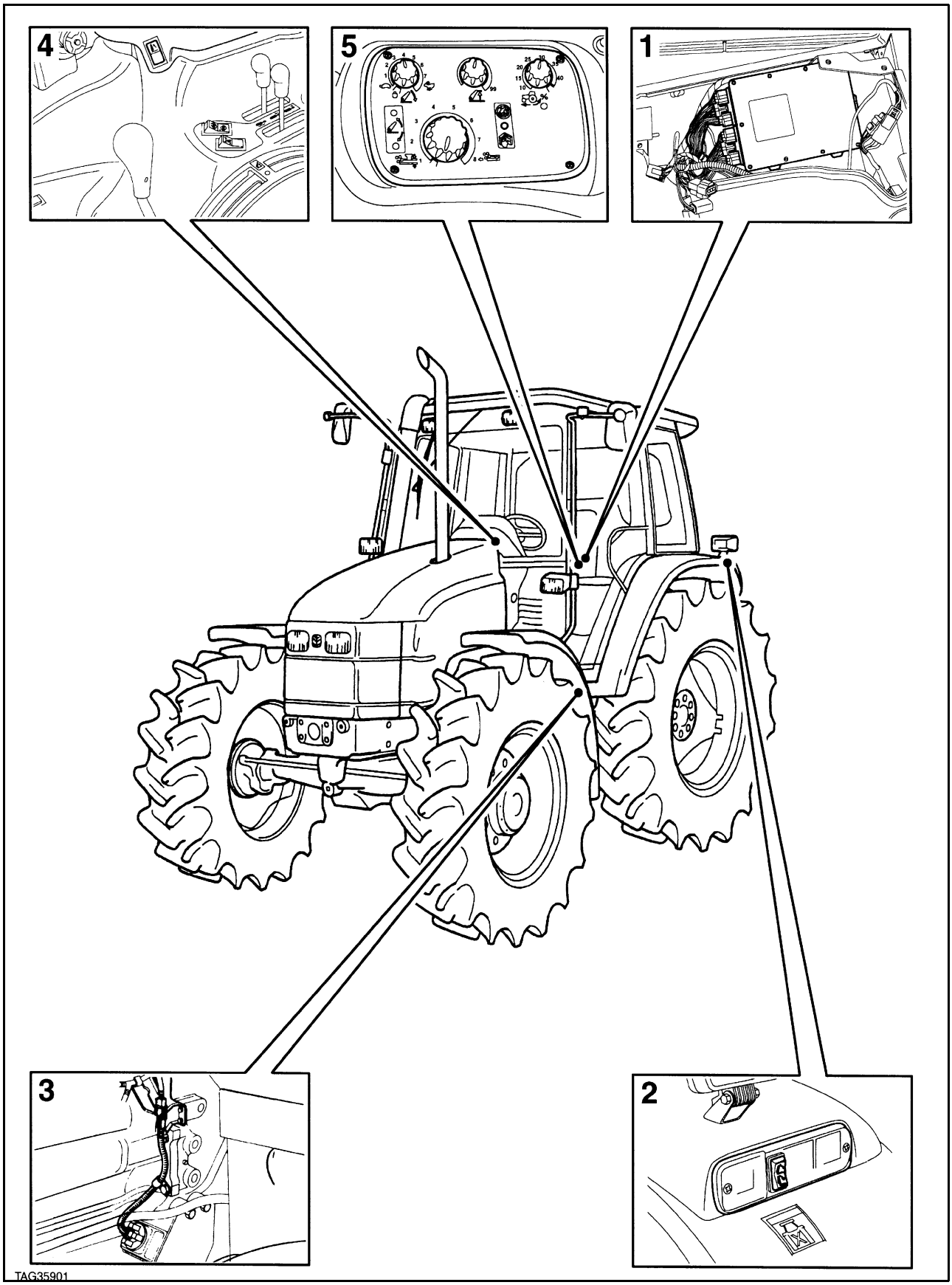

Electronic Draft Control Hydraulic Layout 355

10. Microprocessor*
11. Rear Fender External Lift/Lower Switches
12. Performance Monitor Radar
13. Lift Control Levers
14. Operator Control Console

* On Less Cab tractors the microprocessor is located behind the instrument console

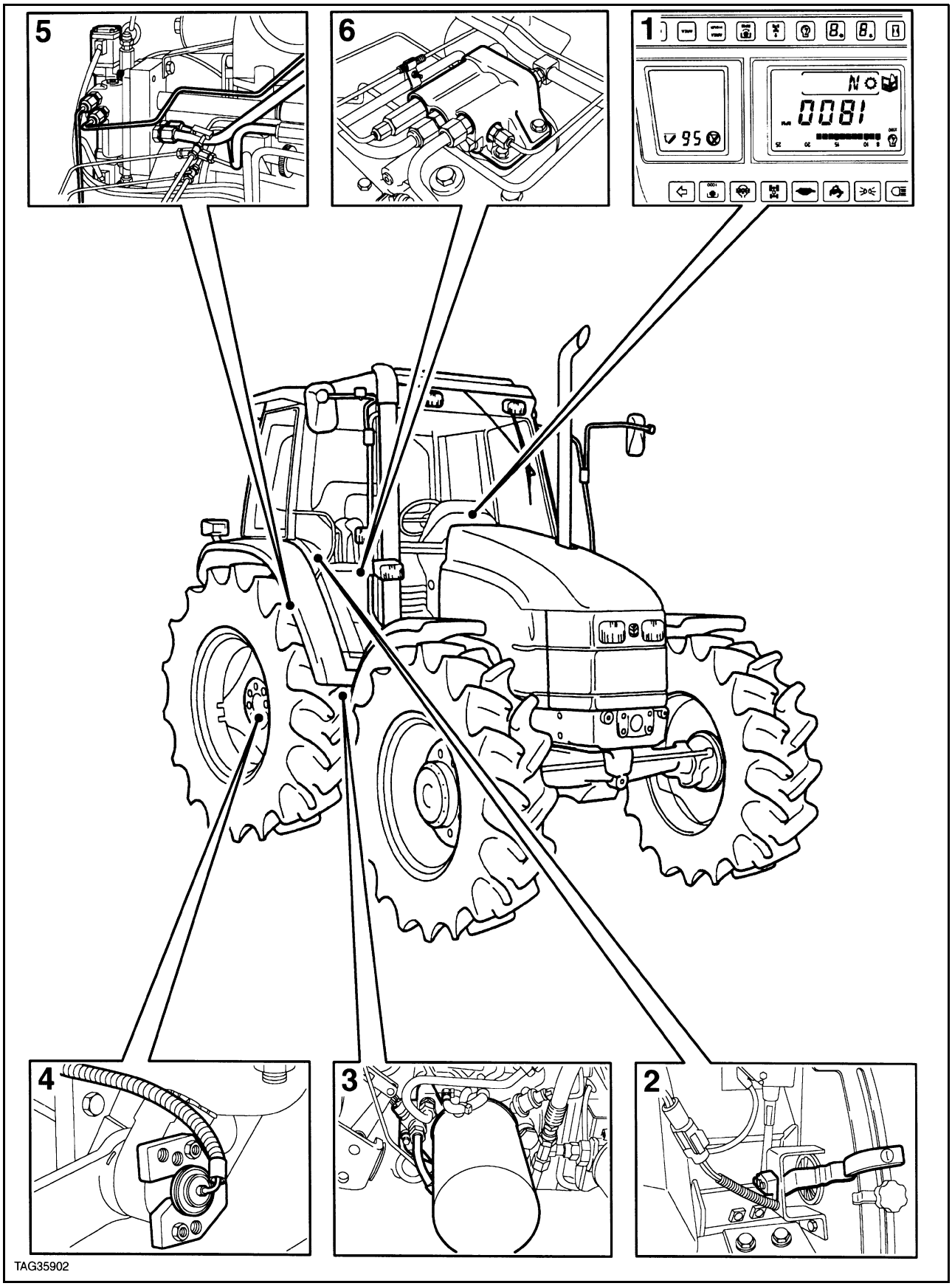

Electronic Draft Control Component Layout 2 356

1. Instrument Panel
2. Lift Lever Potentiometer
3. Fixed Displacement Hydraulic Pump
4. Load Sensing Pin
5. Lift Arm Position Sensing Potentiometer and Electronic Draft Control Valve
6. Priority/Unload Valve Assembly

COMPONENT DESCRIPTION

Processor

The processor, Figure 357, controls the electronic draft control system and also controls the 24x24 transmission dual command clutches, simultaneously but separately.

Control is maintained by sending, receiving and interpreting signals from the other components in the system.

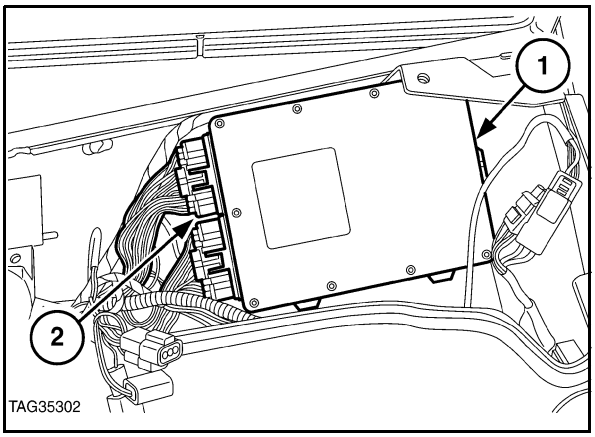

357

Load Sensing Pins

The load sensing pins (2), Figure 358, sense draft variations applied by an implement on the lower links and transmit a signal to the processor.

The operating principal of the pin is to recognise sheer forces in a horizontal plane, applied to the waisted section of the pin (1) by an implements draft. The pin does not react to vertical sheer forces applied by the weight of the implement.

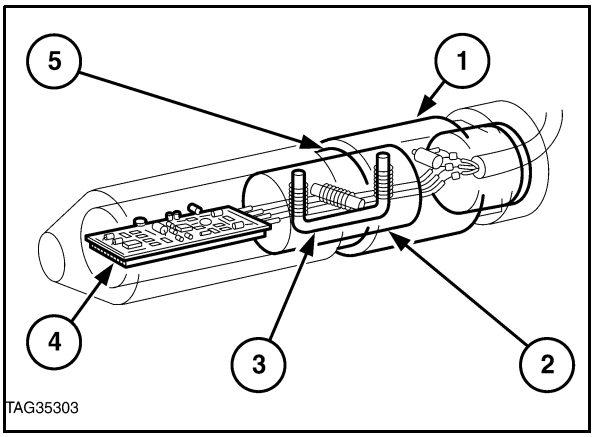

358

When the pin is subjected to implement draft forces the magnetic field within the pin changes and the signal to the microprocessor is changed.

To ensure the pins (2) are correctly installed and only sense sheer forces in the horizontal plane, a special clamp (1) guarantees correct installation, Figure 359.

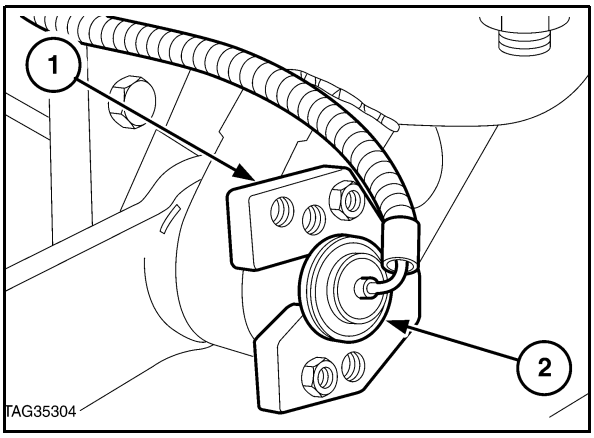

359

Hydraulic Control Valve

The hydraulic control valve, Figure 360, is a proportional solenoid operated valve which responds to pulse width modulation signals from the microprocessor to direct pump pressure oil to and from the hydraulic lift cylinder.

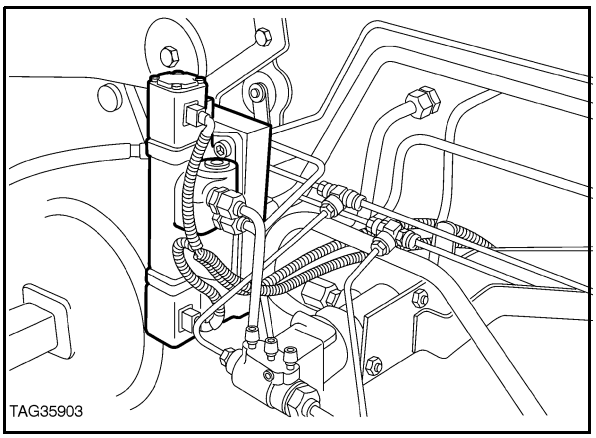

360

Priority/Unload Valve Assembly

The priority/unload valve assembly, Figure 361, contains both priority/unload and combining/unload (sequencing) valve which directs pump system pressure oil to either the hydraulic control valve, remote control valves or to sump as required.

The combining valve also directs the flow of oil from the engine mounted auxiliary pump to the remote valves or sump as required.

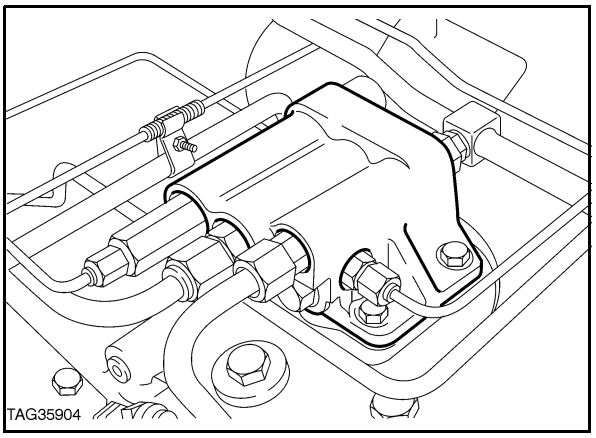

361

Lift Control Lever Potentiometer

The potentiometer (2) on the lift control lever (1), Figure 362, is used to send a signal to the processor to indicate the position to which the lift arms are to be raised.

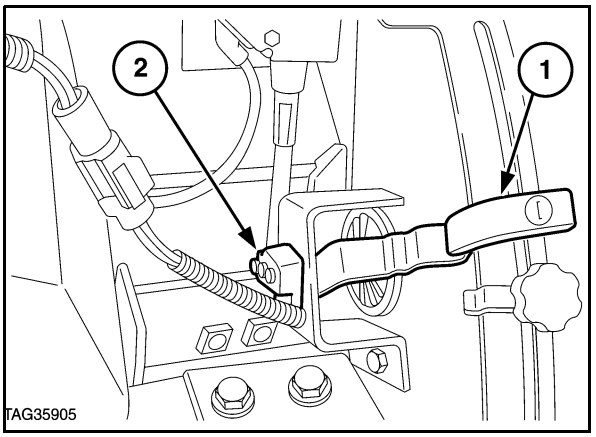

362

Lift Arm Position Sensing Potentiometer

The potentiometer (1) on the lift arm, Figure 363, is used to send a signal to the processor to indicate when the arms have reached the required height.

NOTE: *If either the lift lever or lift arm potentiometer fails, control of the system is transferred to the external fender switches.*

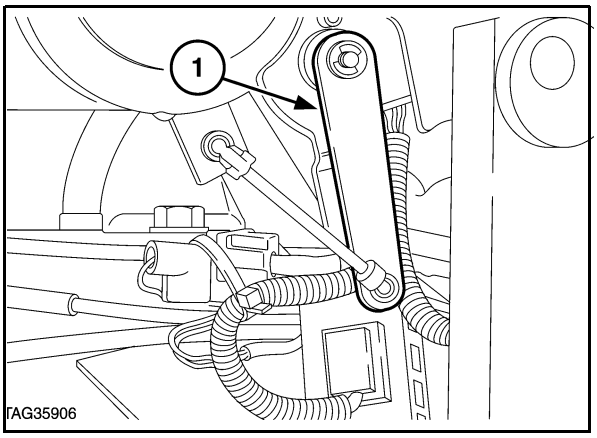

363

Hydraulic Control Panel

The electronic draft and position control system is operated from a console to the right of the operator's seat, Figure 364. Each of the variably adjustable controls is directly attached to a potentiometer. When the control is rotated the potentiometer resistance is varied, changing the input signal to the processor.

Hydraulic Control Panel

1. Height Limit Control
2. Slip Limit Control (option)
3. Slip Limit 'On' Indicator
4. Status Indicator
5. Position/Draft Sensitivity Knob
6. Drop Rate Control Knob
7. EDC Valve Solenoid Indicator Lamps

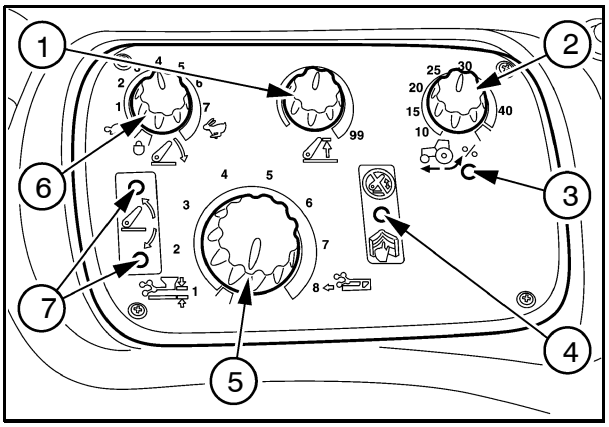

364

The function of each of the controls is as follows:–

The position/draft sensitivity know selects full position control, maximum draft control or a mixture of the two allowing sensitivity in draft control according to operating needs.

The drop rate control is provided to limit the rate of drop of the hitch and functions whenever the implement is raised out of the ground.

The height limit control restricts the maximum height the lift arms can be raised, to prevent large implements from striking the rear of the cab or platform. This control restricts the lift height when either the lift control lever, in cab fast raise/lower switch or external lift/lower switches are used.

The slip limit control (where fitted) limits the amount of wheel slip. The indicator light is illuminated when the lift arms are responding to an excessive slip condition.

The status indicator is flashed when a malfunction identified by the microprocessor occurs in the system. The status indicator is continuously illuminated when the hitch is disabled.

The electronic draft control valve solenoid indicator lamps will illuminate when the solenoids are activated during either raising, lamp (1) or lowering, lamp (2).

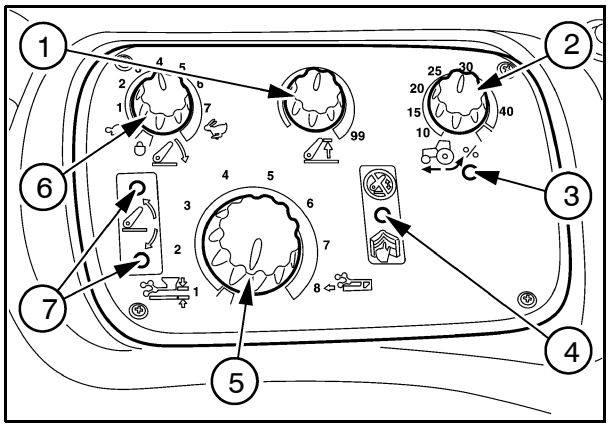

365

Hydraulic Lift Controls

Raising and lowering of the lift arms is controlled by a low effort lever in the right hand console (1), Figure 366.

A 3 position rocker switch is also provided for rapid raising, top of switch pressed in, and lowering, bottom of switch pressed in. The central position provides lowering at a rate set by the drop rate control knob.

NOTE: *The raise/lower switch will not lower the implement if the tractor speed is greater than 15 MPH (24 km/h).*

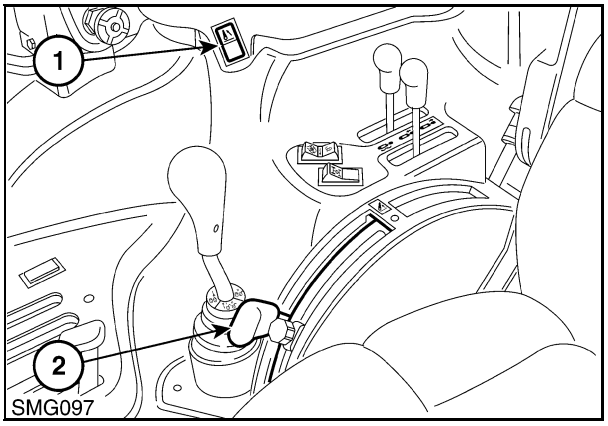

366

Rear Fender External Lift Lower Switches

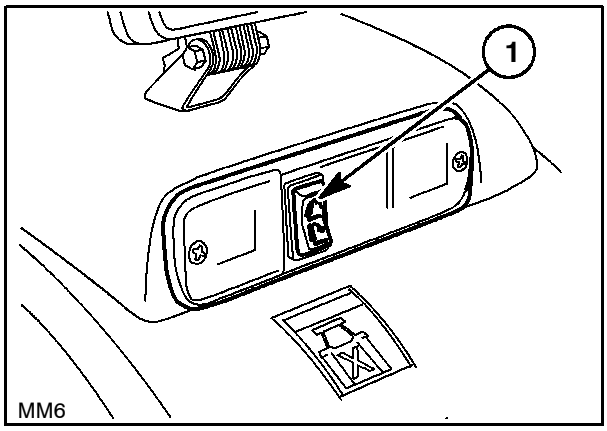

367

These externally operated switches (1) allow the hydraulic linkage to be raised or lowered by the operator while standing beside the tractor, so aiding attachment and detachment of implements.

Pushing the lift lever fully forward past the fixed stop, transfers control of the lift linkage to the rear fender mounted switches.

When using the external switches (1) to operate the hydraulic lift the following precautions must be observed.

Never operate the external switches while standing:

- *Directly behind the tractor or tyres*
- *Between the lower links*
- *On or near the implement*

WARNING: *Never extend arms, legs, any part of the body or any object into the area near the 3-point linkage or implement while operating the external switch.*

Never have an assistant working the opposite set of controls. When moving to the opposite set of controls, move around the tractor or implement. Do **not** cross between the implement and tractor.

The operator must only activate the external switches while standing to the side of the tractor (outboard of the rear tyres) – see Figure 368

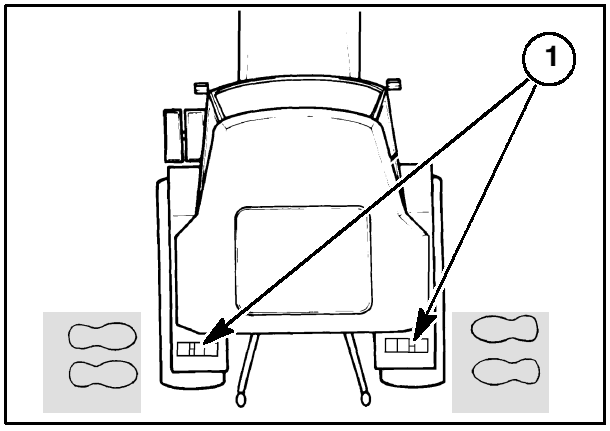

368

Instrument Panel

Either an electronic or analogue electronic instrument panel may be fitted to the tractor and incorporate the following functions to advise on the status of the hydraulic lift assembly. Refer to Figure 369 and Figure 370.

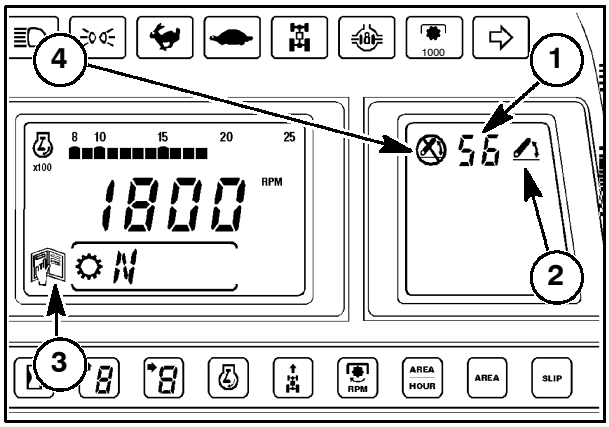

Electronic Instrument Panel 369

1. Implement Position/Diagnostic Repair Code (LCD)
2. Hitch Enabled Symbol (LCD)
3. $Read Your Manual' Symbol (LCD)
4. Hitch Disabled Symbol (LCD)

- Implement Position Display
- Hitch enabled Symbol (Electronic instrument panel only)
- Hitch Disabled Symbol
- Read Your Manual Symbol
- Diagnostic Error Code Location when retrieved via the H–menu diagnostic mode.

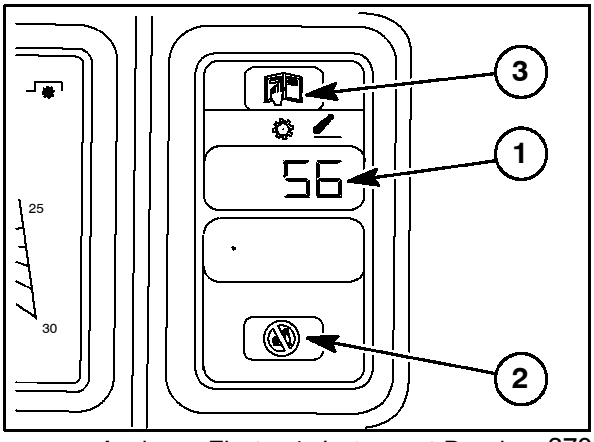

Analogue Electronic Instrument Panel 370

1. Implement Position/Diagnostic Repair Code (LCD)
2. Hitch Disabled Warning Light
3. $Read Your Manual' Light

Implement Position Display

The digital display indicates the position of the lift arms on the scale of 0 (fully lowered) to 99 (fully raised).

Hitch enabled Symbol

The hitch enabled symbol on the electronic instrument panel, illuminates when the position of the lift arms is in phase to the position of the lift control lever.

Hitch Disabled Symbol

The hitch disabled symbol is illuminated if the lift arms and lift control lever are out of phase.

This will occur if:–

(i) The lift control lever has been inadvertently moved whilst the engine is stopped.

(ii) The lift control lever has been pushed fully forward in order to transfer control of the hydraulic lift to the external switches.

To realign the lift arms and lift lever, pull the lever fully forward and then slowly rearward until the hitch disabled symbol disappears. This operation is termed 'capturing the lift'.

Diagnostic Repair Code

Tractors installed with electronic draft control also have a self diagnostic fault finding capability. If a malfunction occurs in the system, a diagnostic repair code will be stored in the processors memory and retrieved via the H–menu diagnostic mode.

Refer to “Fault Finding”, for further details on error code display and a detailed list of error codes.

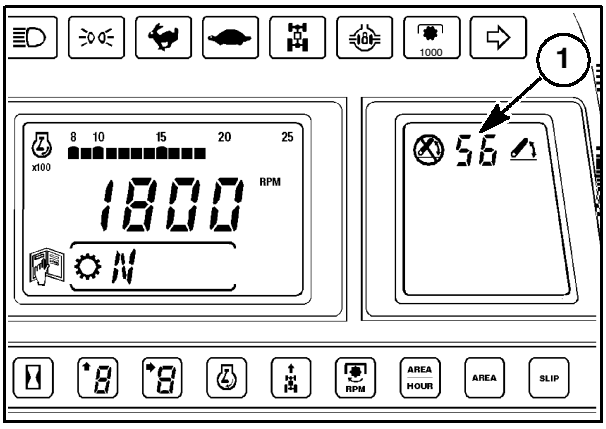

371

Electronic Draft Control Error Code Display
(Electronic Instrument Panel Shown)

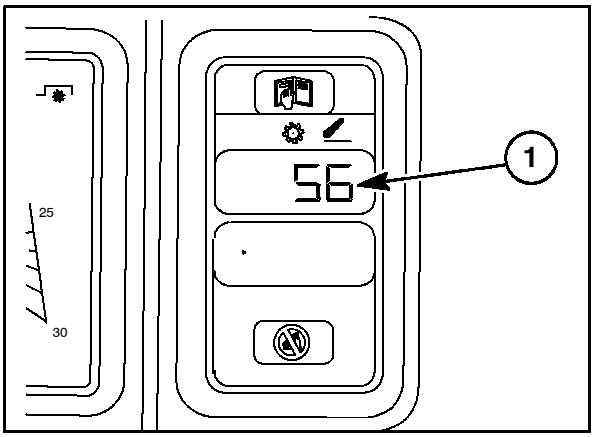

372

Electronic Draft Control Error Code Display
(Analogue Electronic Instrument Panel Shown)

HYDRAULIC OPERATION AND CIRCUITS

Figure 373, illustrates in a block schematic form the flow of electronic signals to and from the hydraulic system, to raise and lower the hydraulic lift in accordance with operator position and draft control requirements.

Electronic signals to the processor for raising and lowering the hydraulic lift assembly in accordance with position and draft control requirements, are received from four main sources. These are the lift control lever and the lift arm position sensing potentiometer, the two load sensing draft control pins in the lower links and the draft/position sensitivity controls on the hydraulic control panel.

Additional signals from the drop rate and maximum lift height controls and wheel slip control (where fitted) also contribute towards the computation of the input signal.

When the lift control lever is moved to raise or lower the lift arms, the resistance of the potentiometer at the base of the lever changes and is sensed by the processor. The processor transmits a revised signal to the hydraulic lift control valve, which raises or lowers the hydraulic lift accordingly.

As the position of the lift arms changes a feedback signal is received by the processor from the lift arm position sensing potentiometer.

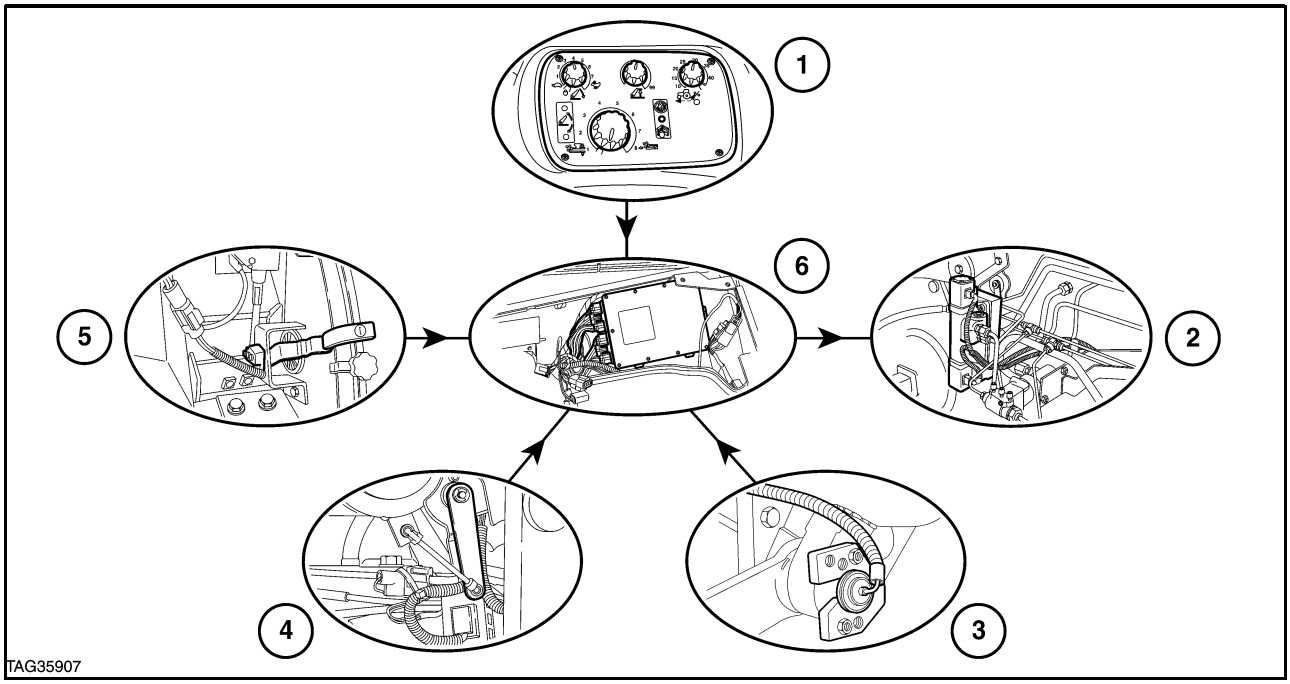

Position/Draft Control Schematic 373

1. Position/Draft Sensitivity Mix Control on Operator Control Panel
2. Solenoid Operated Hydraulic Control Valve
3. Implement Draft Feedback Signal from Load Sensing Pins
4. Hydraulic Lift Arm Position Feedback Signal from Lift Arm Position Sensing Potentiometer
5. Lift Control Lever
6. Processor (Computes Input Signal to Solenoid Operated Hydraulic Control Valve)

When the lift arms have moved to the required position the control signal from the processor to the control valve is turned 'Off' and the lift arms are held in position.

When draft control is selected, draft forces imposed by the implement through the lower links are sensed by the two special load sensing pins.

The average of these draft load signals from each pin is calculated by the processor and compared with the draft control setting selected using the operator control panel.

If the implement draft begins to increase beyond the range selected by the operator, the processor transmits a revised pulse width modulated signal to the control valve which adjusts the implement depth and maintains the specified draft loading.

When a tractor is operated in draft control and under poor traction conditions, the situation can arise where as the tyres slip, the ground speed and draft forces on the load sensing pins reduce. In this situation the reduction in draft forces would signal the microprocessor to continue increasing implement depth to such an extent that it may ultimately stop the tractor from moving forward.

The 'limited slip' option prevents this situation from occurring and uses the processor to calculate the percentage of wheel slip by comparing the tractor ground speed and axle speed.

When wheel slip exceeds the value set by the operator the control valve raises the lift arms, irrespective of draft loading, until the maximum accepted wheel slip is restored.

HYDRAULIC SYSTEM SCHEMATIC

The hydraulic system schematic for tractors with fixed displacement hydraulic pump and electronic draft control is shown in Figure 374.

Main hydraulic pump pressure oil flows to the priority/unload valve assembly through internal oil galleries in the centre housing and hydraulic top cover. A feed tube which intersects the gallery in the top cover, also permits pump pressure oil flow to the hydraulic control valve on the side of the tractor.

The pilot pressure line supplies low pressure circuit oil at 220–240 lbf/in^2 (15.2–16.8 bar) from the tractor low pressure circuit for operation of the main spool in the hydraulic control valve.

The priority/unload valve directs main pump system pressure oil flow to either the hydraulic lift system or remote control valves and return to sump circuits as required.

The load sensing line from the control valve signals the priority/unload valve to increase pump flow to the control valve whenever the hydraulic lift is operated.

The combining valve combines the flow of main pump oil passing through the priority/unload valve with the output from the engine mounted auxiliary pump. This combined oil flow is used to supply the remote valve circuits and any excess flow is returned to sump through the combining valve.

NOTE: *The hydraulic lift always has priority over simultaneous operation of the remote valves.*

Figure 374

Hydraulic Circuit – Electronic Draft Control with Fixed Displacement Hydraulic Pump

1. Auxiliary Assist Rams (Where Fitted)
2. Auxiliary Engine Mounted Pump (Where Fitted)
3. Feed to Remote Valve Assembly
4. Load Sensing Line from Remote Valve Assembly
5. Combining/Unload (Sequencing) Valve
6. Blocked Filter Vacuum Switch
7. Low Oil Temperature Switch
8. High Oil Temperature Switch
9. Feed to P.T.O. Valve
10. Fixed Displacement Hydraulic Pump Assembly
11. Feed to Four Wheel Drive Valve
12. Feed to Differential Lock Valve
13. Transmission Oil Pressure Switch
14. Return from Steering Motor
15. Return from Trailer Brake Valve
16. Feed to Trailer Brake Valve
17. Feed to Steering Motor
18. Priority/Unload Valve Assembly
19. Priority/Unload Valve
20. Electronic Draft Control Valve
21. Auxiliary Services Control Valve
22. Hydraulic Lift Assembly
23. Lift Cylinder Relief Valve

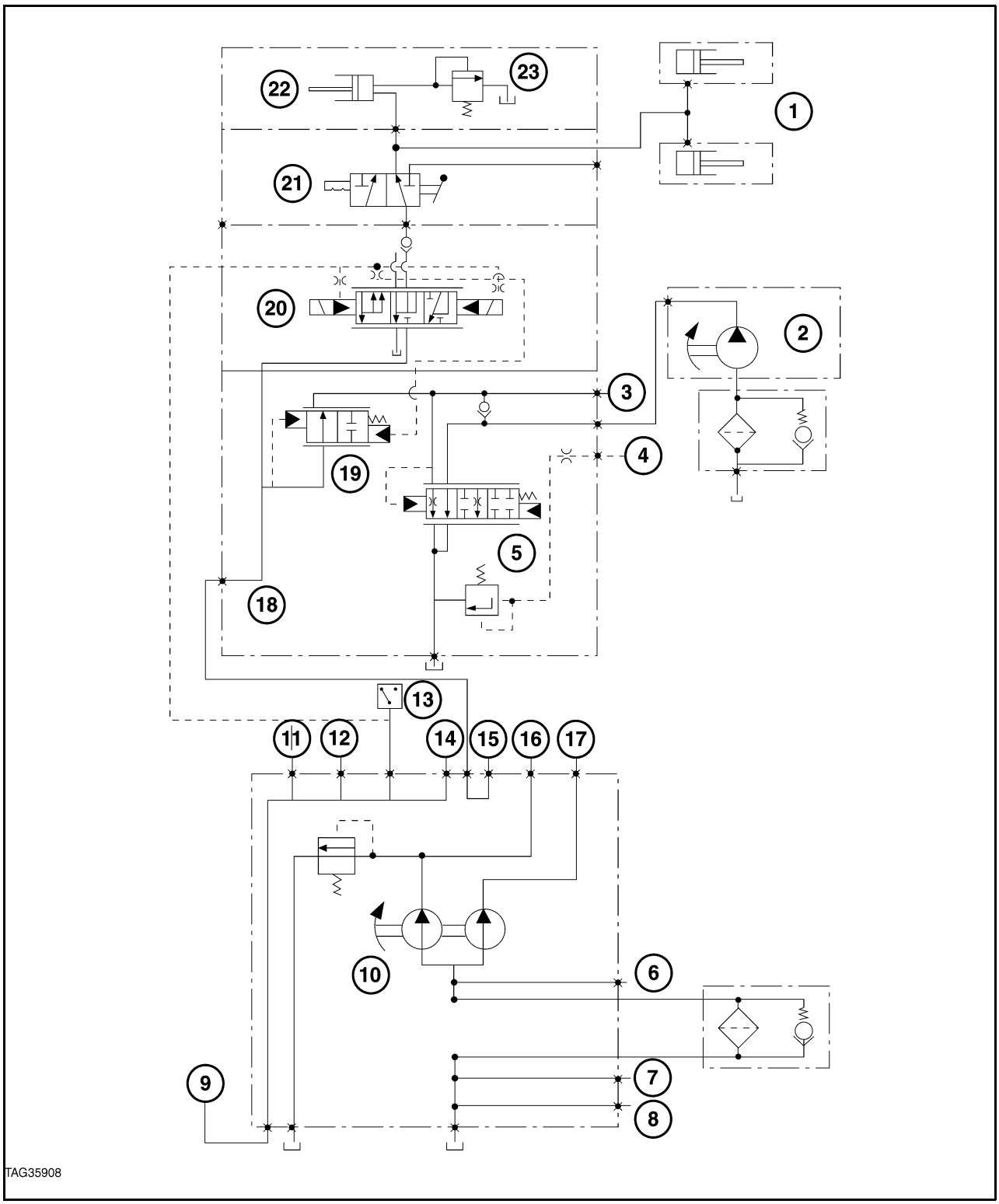

Hydraulic Circuit – Electronic Draft Control with Fixed Displacement Hydraulic Pump 374

Hydraulic Lift in Neutral

With reference to Figure 375

When the hydraulic lift arms are held in a stationary position, the hydraulic lift control valve is in 'Neutral' and the processor is not sending raise or lower signals to the control valve solenoids.

In the neutral condition the spring force applied to each end of the main spool holds the spool in a central position, preventing oil flow from the main pump through the control valve to the hydraulic lift.

When the main spool is in neutral, the right hand end of the load sensing valve and hence the load sensing line are open to sump. In this condition the hydraulic lift load check valve remains seated and oil in the hydraulic lift cylinder is trapped maintaining the lift arms in a stationary position.

Because the hydraulic control valve load sensing line is open to sump the flow of oil from the main hydraulic pump acts on the right hand end of the priority/unload valve, causing the valve to move to the left.

All main pump oil now flows past the priority/unload valve to the remote valve circuits which are also supplemented with the output from the auxiliary engine mounted hydraulic pump.

Pump flow in excess of any remote valve demand, acts on the left hand end of the combining valve, causing the valve to move towards the right. Excess oil flow from both the main and auxiliary pumps then flows through the combining valve to sump through the exhaust port in the base of the housing.

Figure 375

Electronic Draft Control Operation – Neutral

A. Hydraulic Control Valve

1. Pilot Spool
2. Solenoid (Raise)
3. Return to Sump Port
4. Load Sensing Valve
5. Load Sensing Line From Hydraulic Control Valve
6. To Remote Valves
7. Combining/Unload (Sequencing) Valve
8. Priority/Unload Valve
9. Pump System Pressure Inlet
10. To Hydraulic Lift
11. Return to Sump
12. Load Sensing Line from Remote Valves

B Priority/Unload Valve Assembly

13. From Auxiliary Pump
14. System Pressure From Main Pump
15. To Hydraulic Lift via Gallery in Priority/Unload Valve Housing
16. Load Check Valve
17. Main Spool
18. Solenoid (Lower)
19. Pilot Spool
20. Main Spool Inlet Metering Land
21. Main Spool Return To Sump Metering Land
22. Pilot Pressure Inlet

NOTICE

INSERT THE FOLLOWING:

insert 8.5x11 color
section 4
page 4-303 thru 4-308

NOTICE

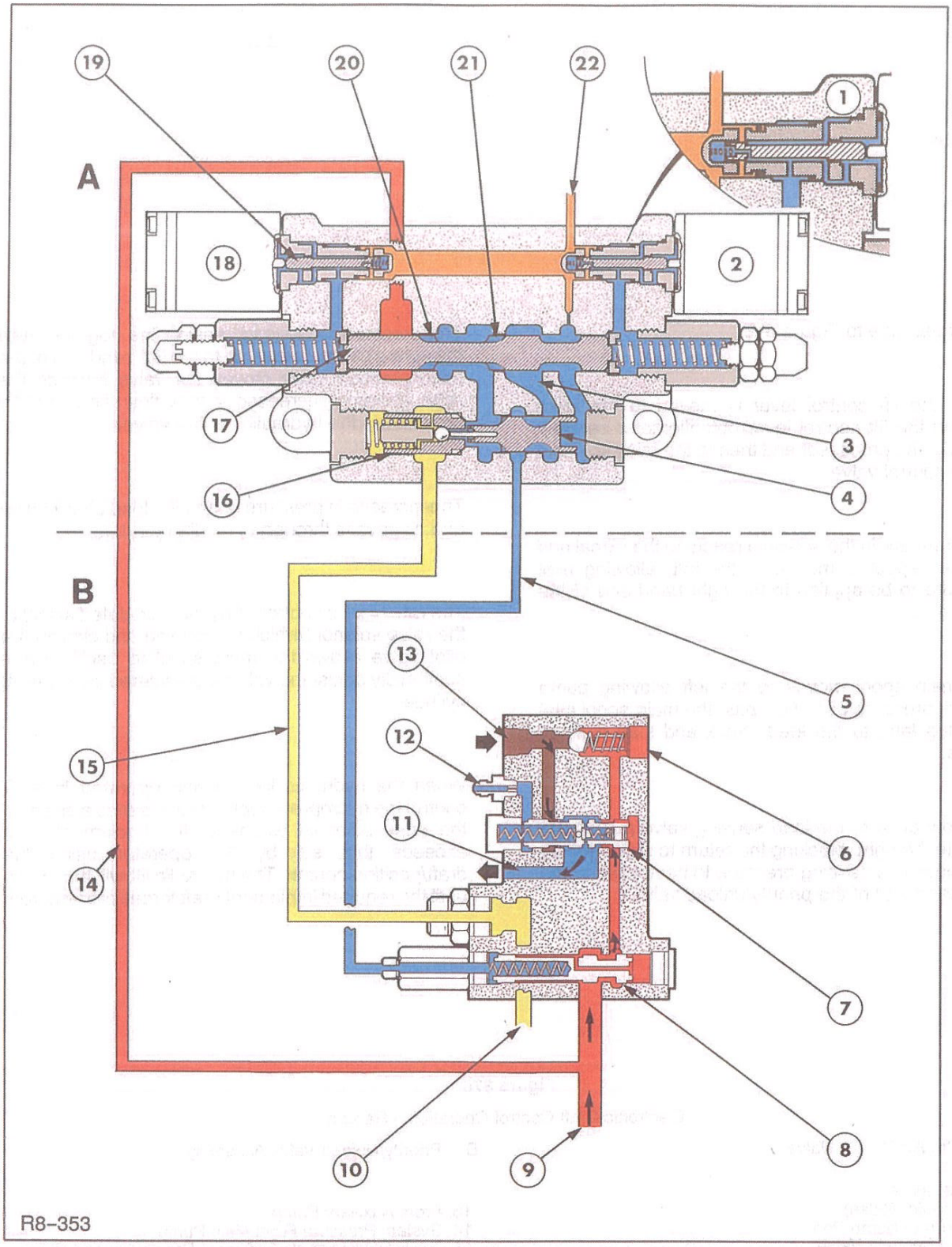

ELECTRONIC DRAFT CONTROL OPERATION – NEUTRAL 375

A Hydraulic Control Valve

- Main Pump Pressure Oil
- Auxiliary Pump Oil
- Trapped Oil

B Priority/Unload Valve Assembly

- Pilot Pressure Oil 220 – 240 lbf/in^2 (15.2 – 16.8 bar)
- Exhaust Oil

Raising

With reference to Figure 376.

When the lift control lever is moved to the raise position the lift control lever potentiometer sends a signal to the processor and then to the raise solenoid of the control valve.

The armature in the solenoid reacts to the signal and the pilot spool is moved to the left, allowing pilot pressure to be applied to the right hand end of the main spool.

The main spool moves to the left allowing pump system pressure oil to flow past the main spool inlet metering land to the load check and load sensing valves.

The flow of oil to the load sensing valve moves the valve to the right, blocking the return to sump gallery and allowing a sensing pressure to be applied to the right hand end of the priority/unload valve.

The pressure in the load sensing line, together with the spring pressure applied to the left hand end of the priority/unload valve moves the valve towards the right directing increased pump flow and system pressure to the hydraulic control valve.

The increase in pressure opens the load check valve and oil passes through to the lift cylinder.

The rate of lift is controlled by the modulated signal to the raise solenoid which by opening and closing the pilot valve allows the main spool to oscillate and continually adjust the volume of metered oil to the lift cylinder.

When the hydraulic lift is being operated in draft control the microprocessor similarly sends a signal to the raise solenoid whenever the implement draft exceeds that set by the operator using the draft/position control. The hydraulic lift will then raise until the required implement draft forces are restored.

Figure 376

Electronic Draft Control Operation – Raising

A. Hydraulic Control Valve

1. Pilot Spool
2. Solenoid (Raise)
3. Return to Sump Port
4. Load Sensing Valve
5. Load Sensing Line From Hydraulic Control Valve
6. To Remote Valves
7. Combining/Unload (Sequencing) Valve
8. Priority/Unload Valve
9. Pump System Pressure Inlet
10. To Hydraulic Life
11. Return to Sump
12. Load Sensing Line from Remote Valves

B Priority/Unload Valve Assembly

13. From Auxiliary Pump
14. System Pressure From Main Pump
15. To Hydraulic Lift via Gallery in Priority/Unload Valve Housing
16. Load Check Valve
17. Main Spool
18. Solenoid (Lower)
19. Pilot Spool
20. Main Spool Inlet Metering Land
21. Main Spool Return To Sump Metering Land
22. Pilot Pressure Inlet

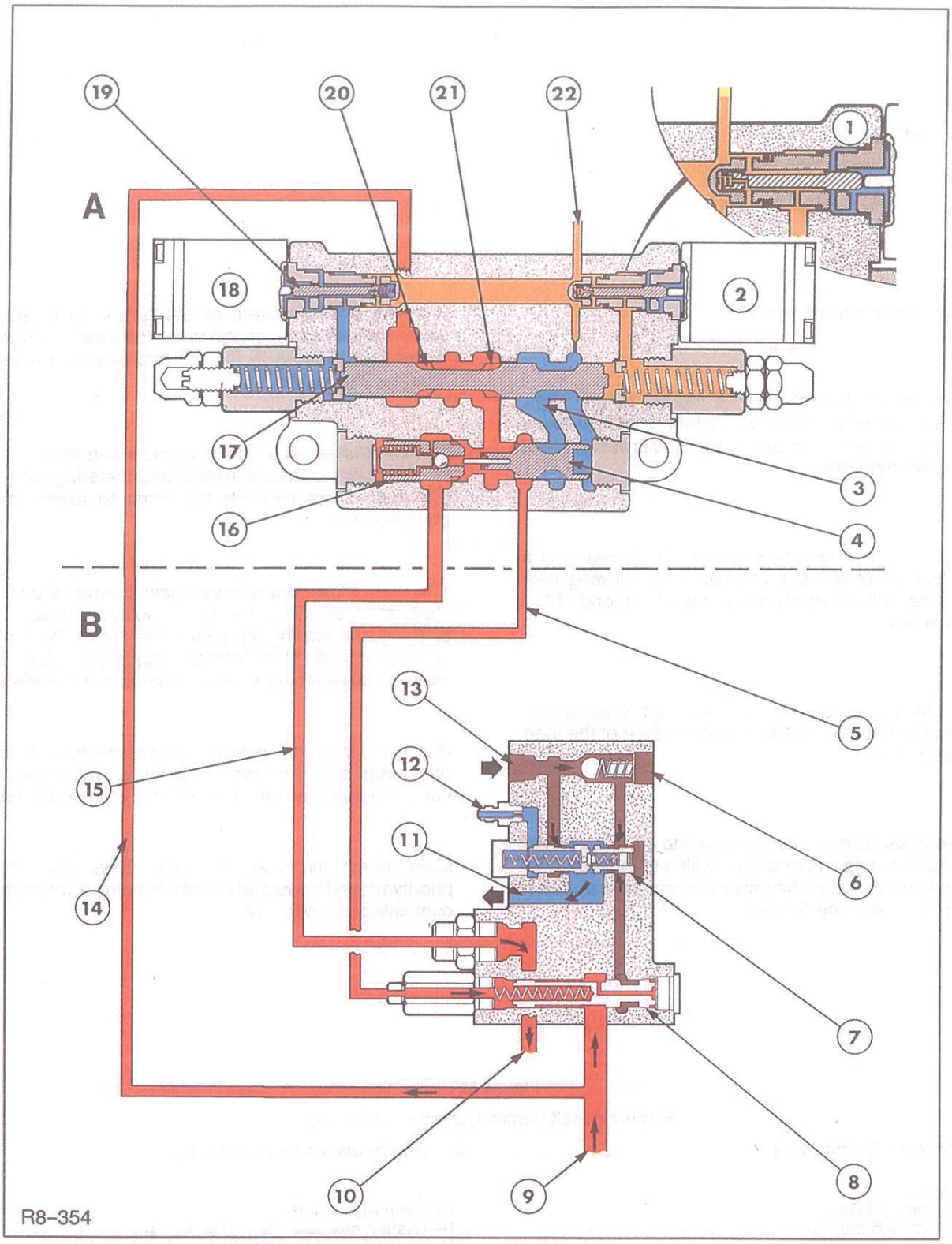

ELECTRONIC DRAFT CONTROL OPERATION – RAISING 376

A Hydraulic Control Valve

Main Pump Pressure Oil

Auxiliary Pump Oil

B Priority/Unload Valve Assembly

Pilot Pressure Oil 220 – 240 lbf/in^2 (15.2 – 16.8 bar)

Exhaust Oil

LOWERING

With reference to Figure 377.

When the lift control lever is moved to the lower position, the lift control lever potentiometer sends a signal to the processor and then to the lower solenoid of the control valve.

The armature in the solenoid reacts to the signal and the pilot spool is moved to the right, allowing pilot pressure oil to be applied to the left hand end of the main spool.

The main spool now moves to the right allowing pilot pressure oil to flow to the right hand face of the load sensing valve.

The load sensing valve now moves to the left, venting the load sensing line to sump, while at the same time the pin on the end of the valve unseats the ball in the end of the load check valve.

With the ball unseated, oil behind the load check valve vents to sump enabling the load sensing valve to continue moving to the left and unseat the load check valve poppet.

The pressurised oil in the lift cylinder can now return to sump across the return to sump metering land of the main spool allowing the arms to lower at a controlled speed.

The rate of lowering is once again controlled by the modulated signal to the lower solenoid which by opening and closing the pilot valve allows the main spool to oscillate and continually adjust the volume of metered oil returning to sump from the lift cylinder.

During the lowering cycle, the load sensing line to the priority/unload valve is vented to sump enabling main pump system pressure to move the valve to the left.

Main pump pressure oil now flows past the priority/unload valve and returns to sump through the combining/unload valve.

Figure 377

Electronic Draft Control Operation – Lowering

A. Hydraulic Control Valve

1. Pilot Spool
2. Solenoid (Raise)
3. Return to Sump Port
4. Load Sensing Valve
5. Load Sensing Line from Hydraulic Control Valve
6. To Remote Valves
7. Combining/Unload (Sequencing) Valve
8. Priority/Unload Valve
9. Pump System Pressure Inlet
10. To Hydraulic Life
11. Return to Sump
12. Load Sensing Line from Remote Valves

B Priority/Unload Valve Assembly

13. From Auxiliary Pump
14. System pressure From Main Pump
15. To Hydraulic Lift via Gallery in Priority/Unload Valve Housing
16. Load Check Valve
17. Main Spool
18. Solenoid (Lower)
19. Pilot Spool
20. Main Spool Inlet Metering Land
21. Main Spool Return To Sump Metering Land
22. Pilot Pressure Inlet

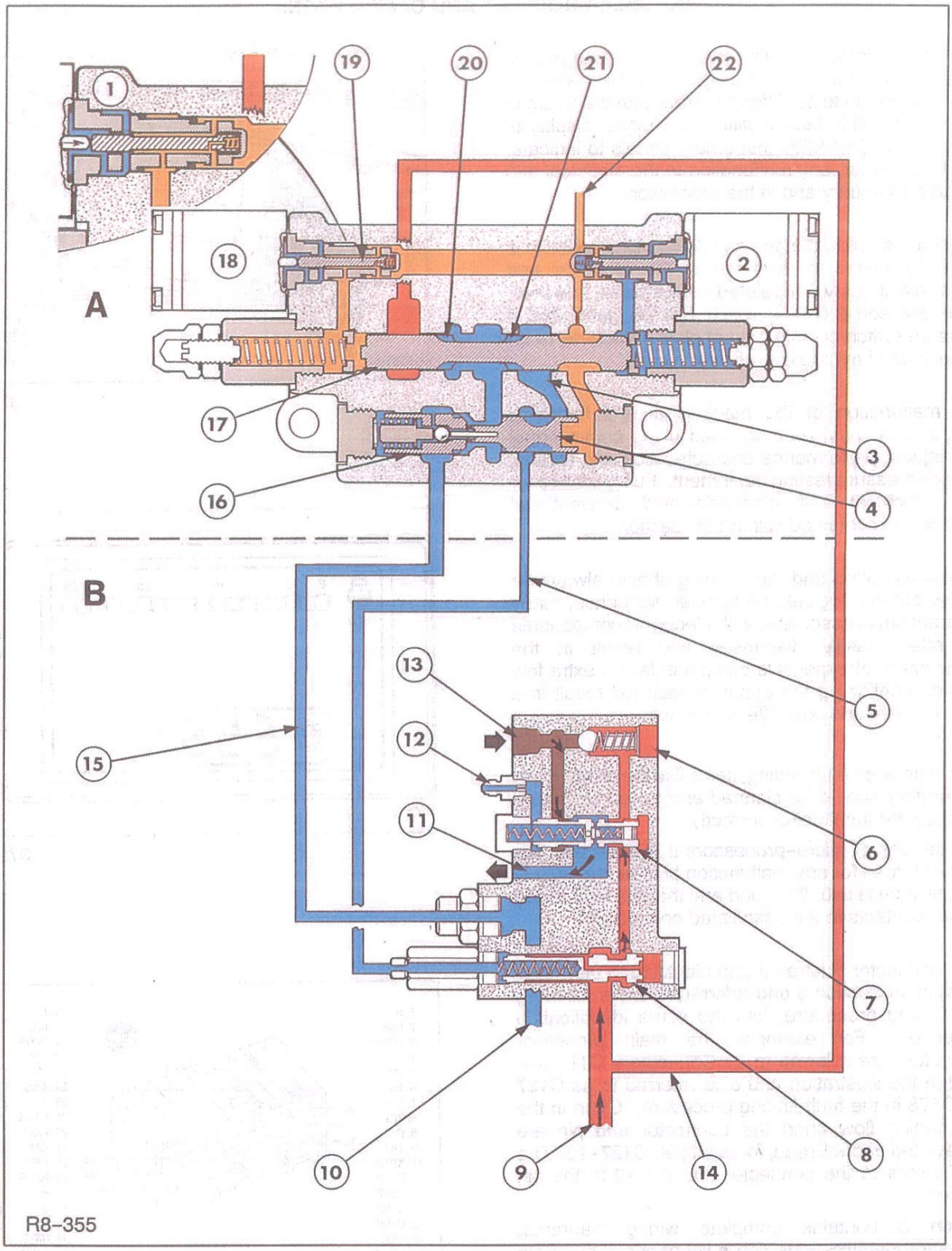

ELECTRONIC DRAFT CONTROL OPERATION – LOWERING 377

A Hydraulic Control Valve

Main Pump Pressure Oil

Auxiliary Pump Oil

B Priority/Unload Valve Assembly

Pilot Pressure Oil 220 – 240 lbf/in^2 (15.2 – 16.8 bar)

Exhaust Oil

TROUBLE SHOOTING AND CALIBRATIONS

The transmission / EDC electronic management system has an inbuilt self diagnostic facility which is able to store up to 30 different errors with the hours of occurence. This facility utilises the digital display of either the EIC or AEIC instrument panels to indicate, in coded format, any malfunction in the electrical and electronic circuitry and in the processor.

It should be noted that the self diagnostic capability is generally limited to diagnosis of the electrical and electronic circuitry and related components, however, there are some codes, which can be generated if pressure switch circuits are not closed because of an actual lack of hydraulic pressure.

Any malfunction of the mechanical and hydraulic components must be diagnosed using conventional techniques, performance characteristics and tooling, such as pressure testing equipment. Full guidance for both electrical self diagnosis and conventional diagnosis is contained within this section.

Trouble-shooting and fault finding should always be carried out in a logical and planned sequence, many apparent faults associated with electronic components are often hastily diagnosed and result in the replacement of expensive components. An extra few minutes confirming the apparent fault will result in a more positive and cost effective repair.

Prior to detailed fault finding, items like the earth points and Battery should be cleaned and tested to ensure that they are functioning correctly.

With the use of micro-processors it is often that this item is blamed for any malfunction but the real truth is that this item is usually sound and that the fault is due to poor contacts in the associated connectors.

Each connector illustrated and identified in the wiring diagrams in Section 3 and referred to in the following fault finding procedure, has the same identification reference. For example, the main processor connectors are referred to as Connectors C127 and C128 in the illustration and also referred to as C127 and C128 in the fault finding procedure. Often in the fault finding flow chart the connector and pin are abbreviated and will read, for example, C127-10. The C127 refers to the connector and the 10 to the pin number.

Section 3 contains complete wiring diagrams, connector identifications and a list of circuit numbers as used within the circuit diagrams.

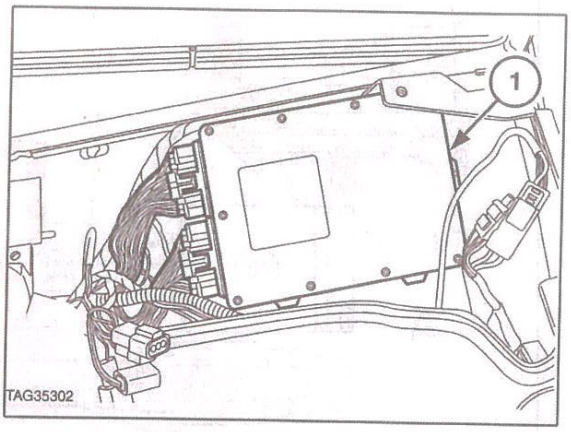

378

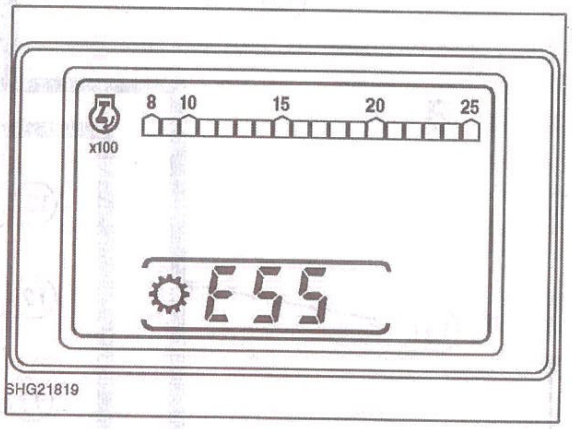

379

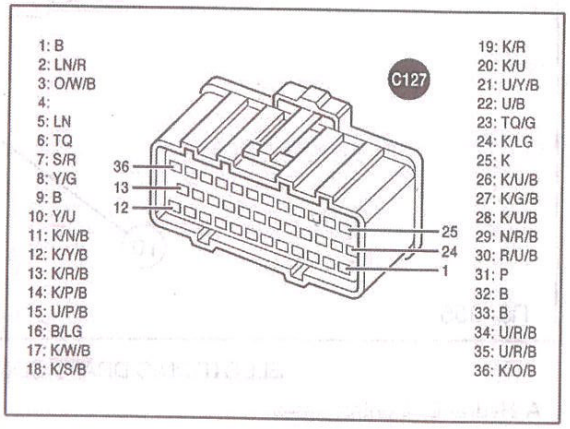

380

Where the fault finding procedure requires checks for continuity a visual inspection of the wiring should be made prior to conducting tests to ensure that obvious 'mechanical' damage has not occurred to the harness or the connectors.

Where possible the inbuilt tractor diagnostics should be utilised to determine the area of the fault.

The 'H' menu mode, described in Section 3, provides several modes to aid diagnosing faults. One particular mode which should be used, before any connections are split, is the H5, switch diagnostics mode. This will provide testing of many switch circuits, including the switch itself. If this mode highlights a fault within a circuit then more detailed fault finding can be directed towards a particular circuit.

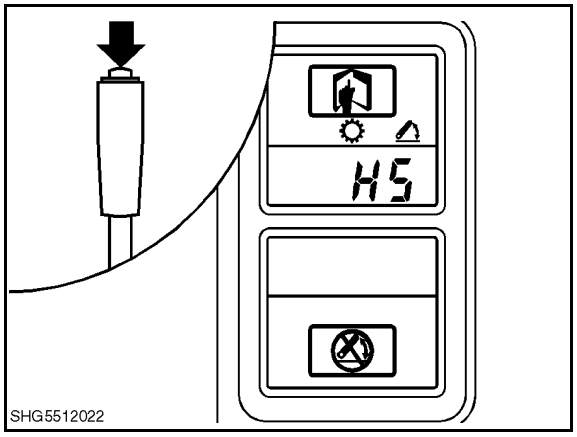

381

A good quality multi-meter is an essential item to perform fault finding. It should be capable of measuring resistance of at least 20,000 ohms and measuring voltage and current. When using the multi-meter it is good practice to select a high range and work downwards to avoid damaging the instrument.

Where possible it is recommended that connectors are probed from the rear, certain connectors like C079, C080 and C081, instrument panel connectors, should always be probed from the rear. Connector terminals should only be removed using the special tools supplied in electrical repair kit, Tool No.4FT.953 and the wires should not require excessive pulling efforts to remove.

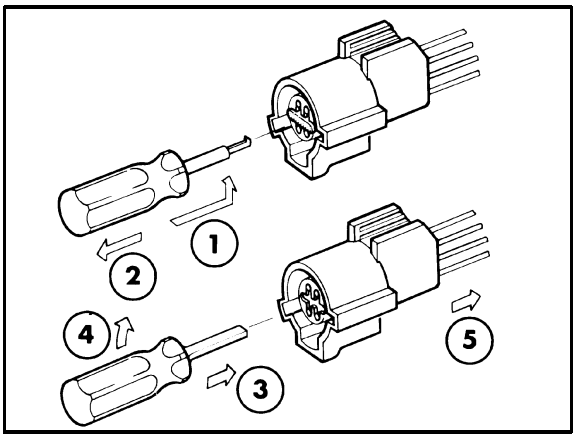

382

Where only front probing is practical it is recommended that Connector test probe kit, Tool No NH.55-125 is obtained. This provides all connector terminal attachments for use with most multi-meters.

IMPORTANT: *Care should be used when using the multi-meter, only use the instrument as instructed to avoid damage to the internal elements of the micro-processor. When checking the continuity of wiring, sensors or switches it is necessary to isolate the electronic micro-processor and ensure the keystart is turned off to prevent possible further damage. The keystart should only be switched on and the processor connected where specifically instructed in the fault finding procedure.*

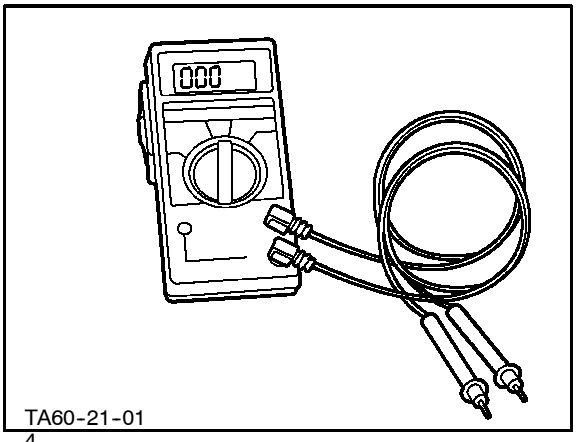

383

If it is found necessary to clean the connectors a contact spray should be used. DO NOT USE ANY OTHER METHOD FOR CLEANING TERMINALS. Do not use a cleaner that contains Trichloro-ethylene, this solvent will damage the plastic body of the connector. It is preferable to use a cleaner with a Freon T.F. base.

ERROR CODES

The transmission / EDC processor is able to create and store up to 30 error codes with the hours at which they occured and with the number of incidences that a particular error code has occured. Only error codes that prevent the tractor from driving will be displayed to the operator, other non disabling errors will be retreivable by a technician through the H menu mode of the tractor diagnostics.

It should be noted that the hours displayed is not related directly to the hour meter. For example, if the occurence hours shows '10' this indicates that the error occured 10 hours ago, not at 10 hours of operation.

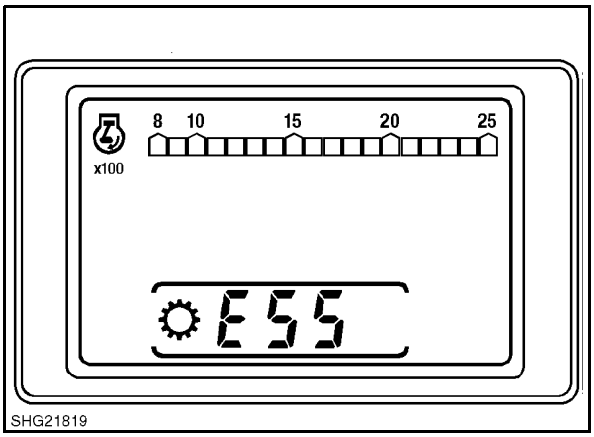

384

The following 'H' menu mode routines are provided to allow access to Error codes:

Hb – Retrieve error codes for viewing.

Hc – Clear processor memory of stored error codes

Hd – View error codes live. This allows normal operation of the tractor with error codes able to display as they occur.

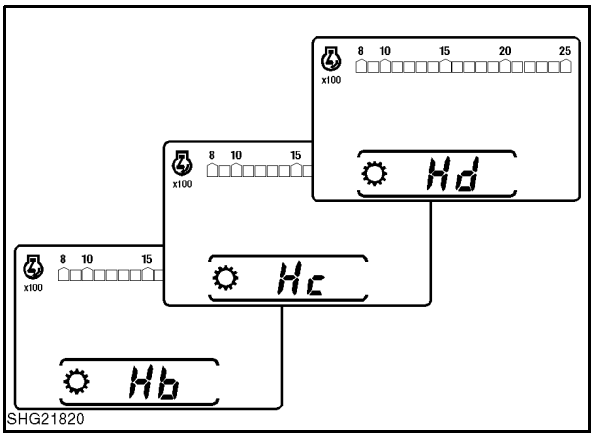

385

A full description of the 'H' menu routines can be found in Section 3.

It should also be noted that after installation of a new processor or after a non volatile memory reset operation ('H' menu mode, H8), that the processor defaults to a 'display all codes' mode for 6 minutes. If no error codes occur during this 6 minute period the processor then reverts to normal operation. If an error occurs during this period the processor will continue to display 'live' error codes until all the errors are removed.

ELECTRONIC DRAFT CONTROL ERROR CODES

Error Code	Error Description	Page
Code 2	Poor or no signal from tractor performance monitor radar	
Codes 3, 4 and 5	Speed Sensor Errors	
Codes 6 and 7	Slip Control Potentiometer or Circuit Failed	
Code 8	Raise/Work/Lower Switch Failure	
Code 9	Both External Lift/Lower Fender Switches are being Operated Simultaneously	
Codes 10 and 11	Height Limit Control Potentiometer Failed	
Codes 12 and 13	Drop Rate Potentiometer Failed	
Codes 14 and 15	Right Hand Load Sensing Pin or Circuit Failed	
Codes 16 and 17	Left Hand Load Sensing Pin or Circuit Failed	
Code 18	Both Load Sensing Pins Disconnected	
Codes 19 and 20	Incorrect Load Sensing Pin Reference Voltage	
Codes 21 and 22	Position/Draft Sensitivity Control Potentiometer or Circuit Failed	
Code 23	Control Panel Disconnected	
Code 24	Perform Hydraulic Lift calibration	
Code HL	Height Limit Incorrectly Set to Perform Autocalibration	
Codes 25 and 26	Lift Control Lever Potentiometer Disconnected or Circuit Failed	
Codes 27 and 28	Lift Arm Position Sensing Potentiometer Disconnected or Circuit Failed	
Code 29	Hydraulic Control Valve Disconnected	
Code 30	Ground Signal to Microprocessor Open Circuit	
Code 31	Chassis Harness Disconnected	
Code 49	Wheel Speed Sensor Open/Short Circuit	
Code 53	Microprocessor 5 volt Reference Shorted to 12 volts	
Code 54	Microprocessor 5 volt Reference Shorted to Ground	
Code 57	EDC Microprocessor Failure	
Code 59	Microprocessor 5 volt Reference Voltage Open Circuit	
Code 63 and 65	EDC Hydraulic Valve Lower Solenoid Open/Short Circuit	
Code 64 and 66	EDC Hydraulic Valve Raise Solenoid Open/Short Circuit	
Code 67	EDC Hydraulic Valve Supply Voltage to Low	
No Error Code	Miscellaneous Hydraulic Lift Concerns	

ERROR CODES 2

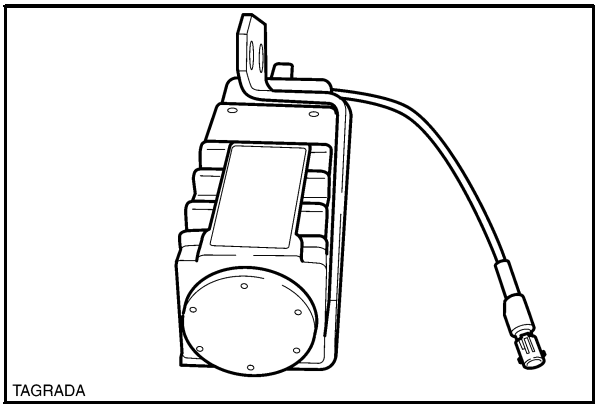

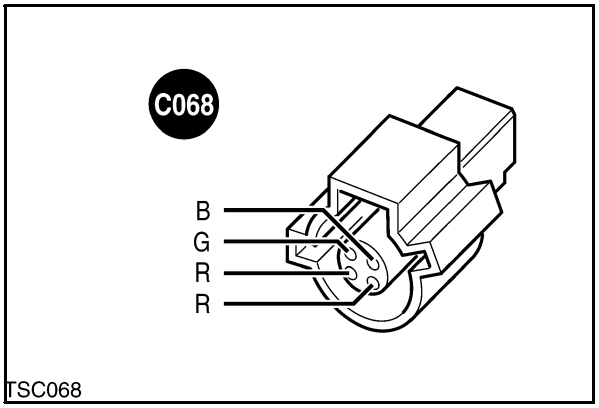

ERROR CODE 2 – Poor or no signal from tractor performance monitor radar

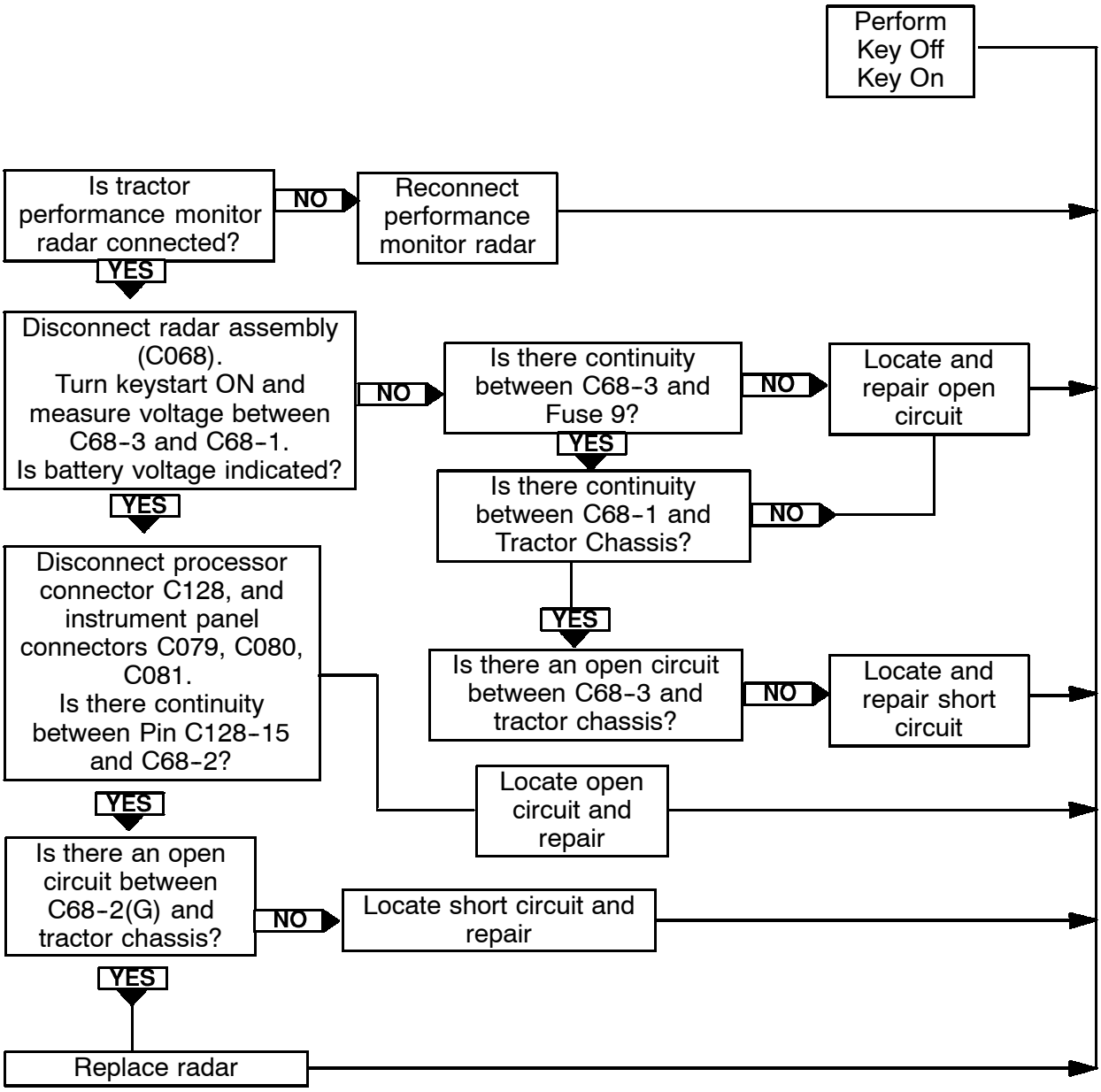

ERROR CODES 3, 4 & 5 – Speed sensor errors

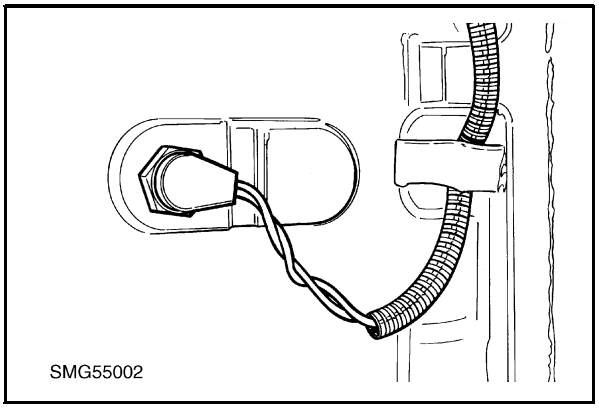

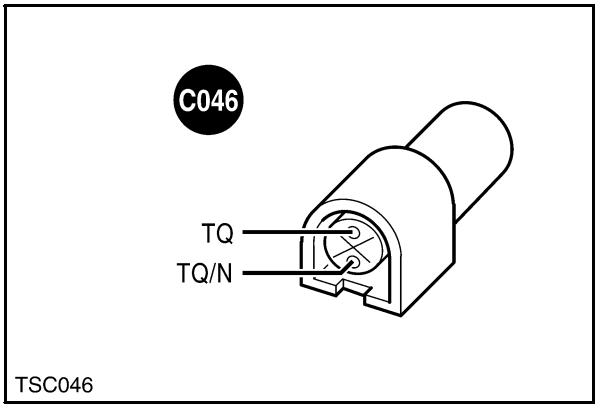

ERROR CODES 3, 4 & 5 – Speed sensor errors

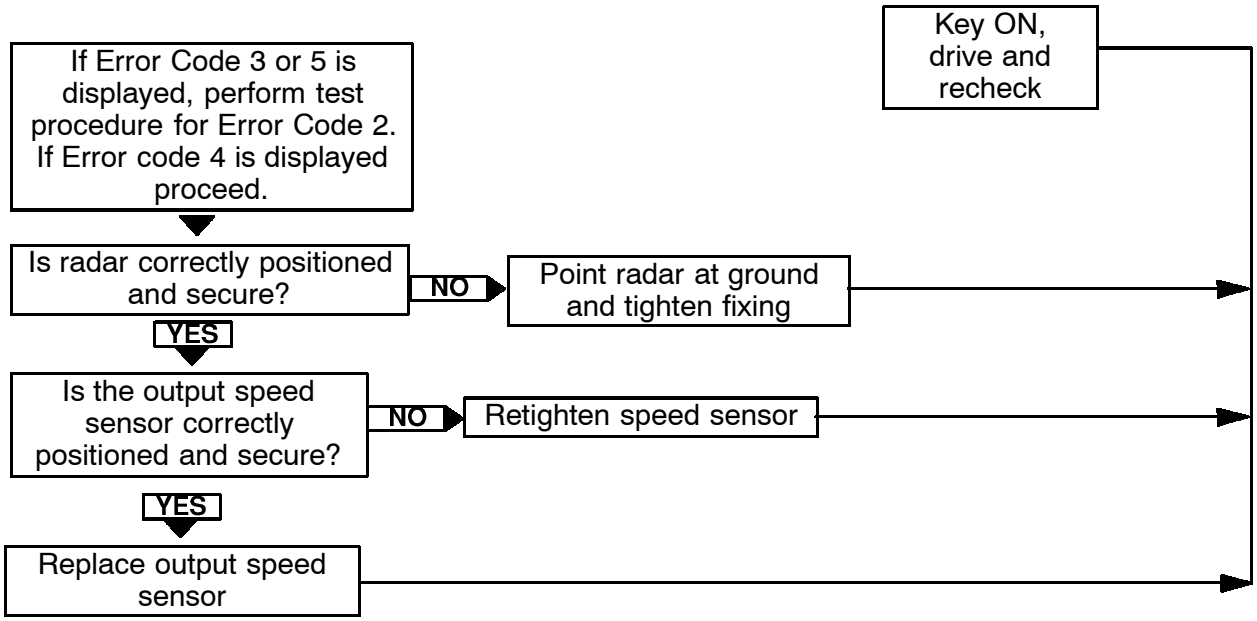

ERROR CODES 6 & 7

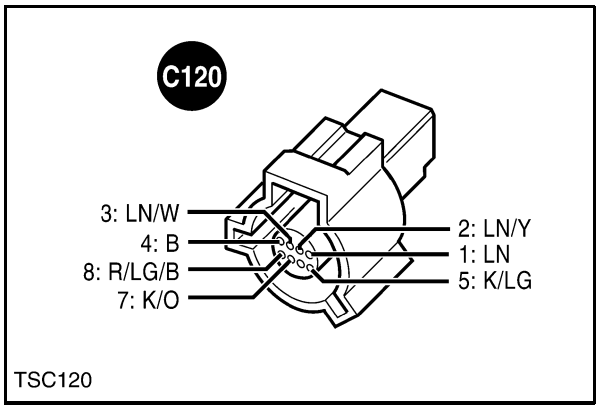

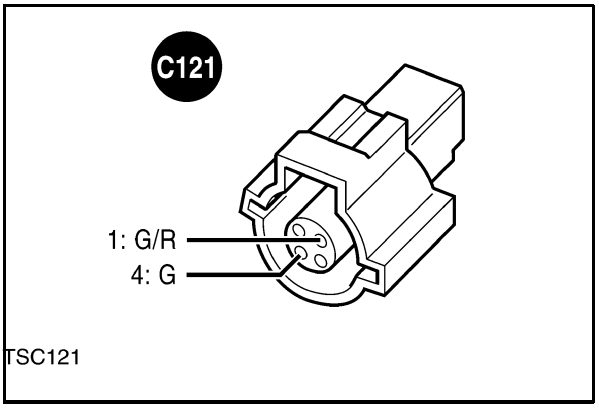

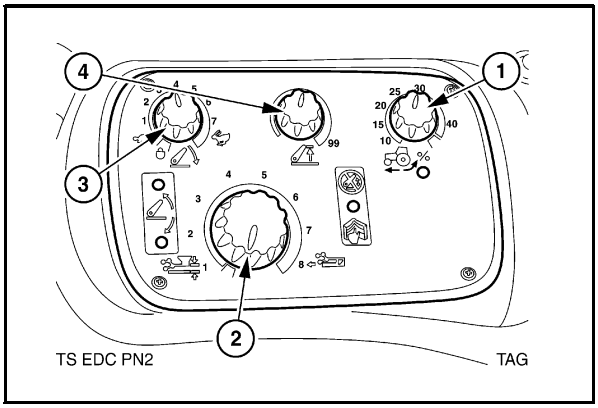

ERROR CODES 6 & 7 - Slip control potentiometer or circuit failed

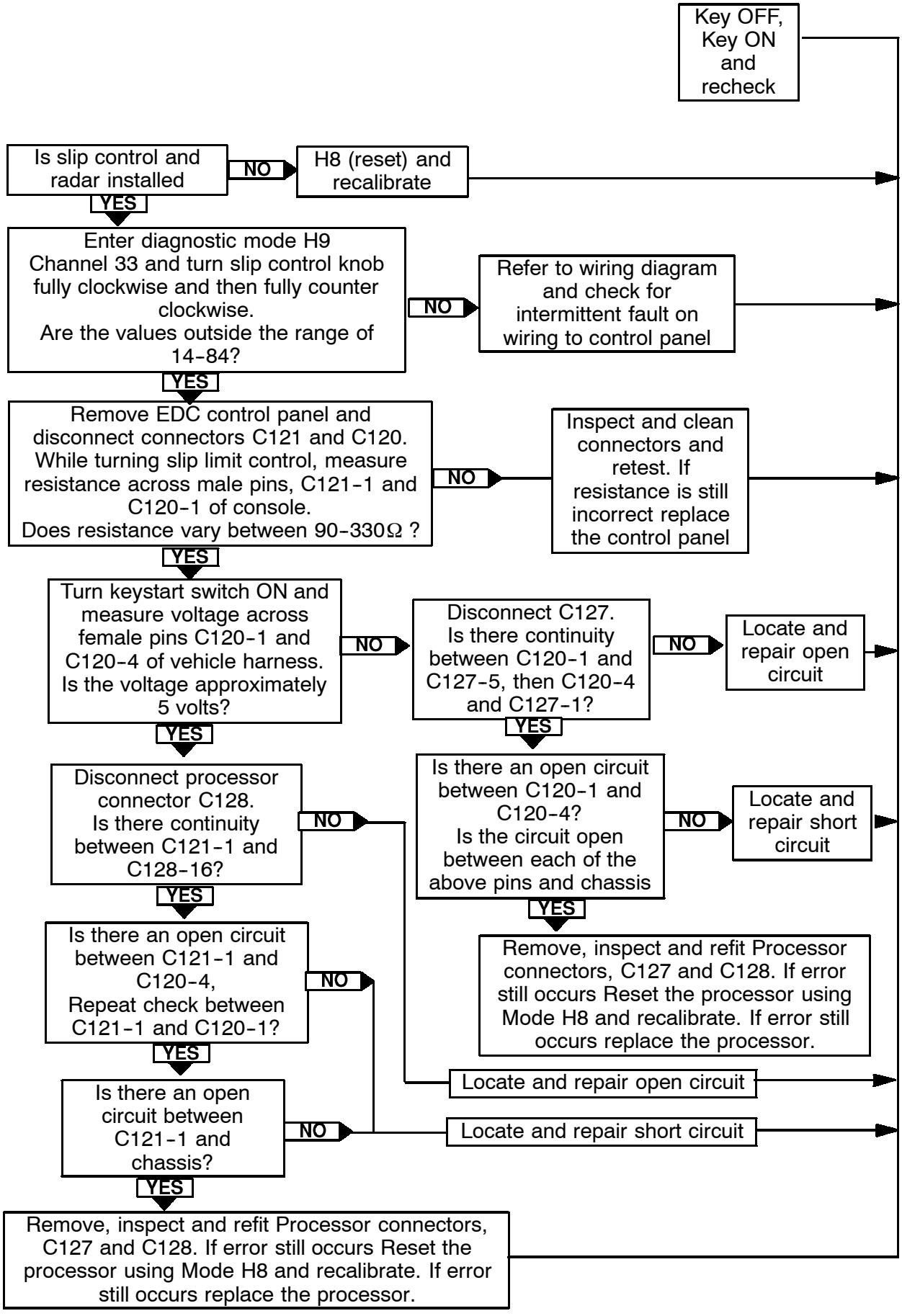

ERROR CODE 8 – In cab Raise/Work/Lower switch failure

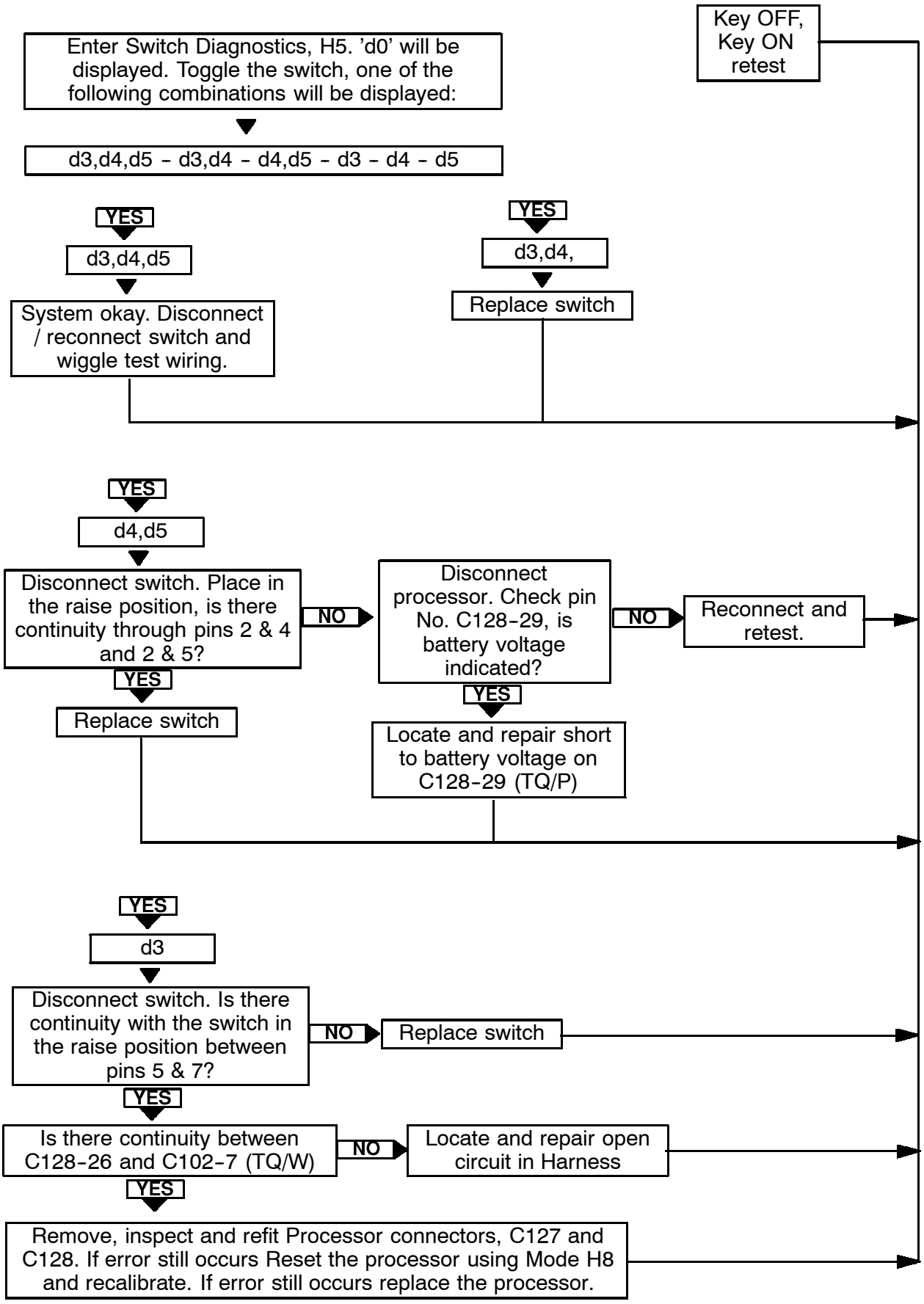

ERROR CODE 8 - In cab Raise/Work/Lower switch failure

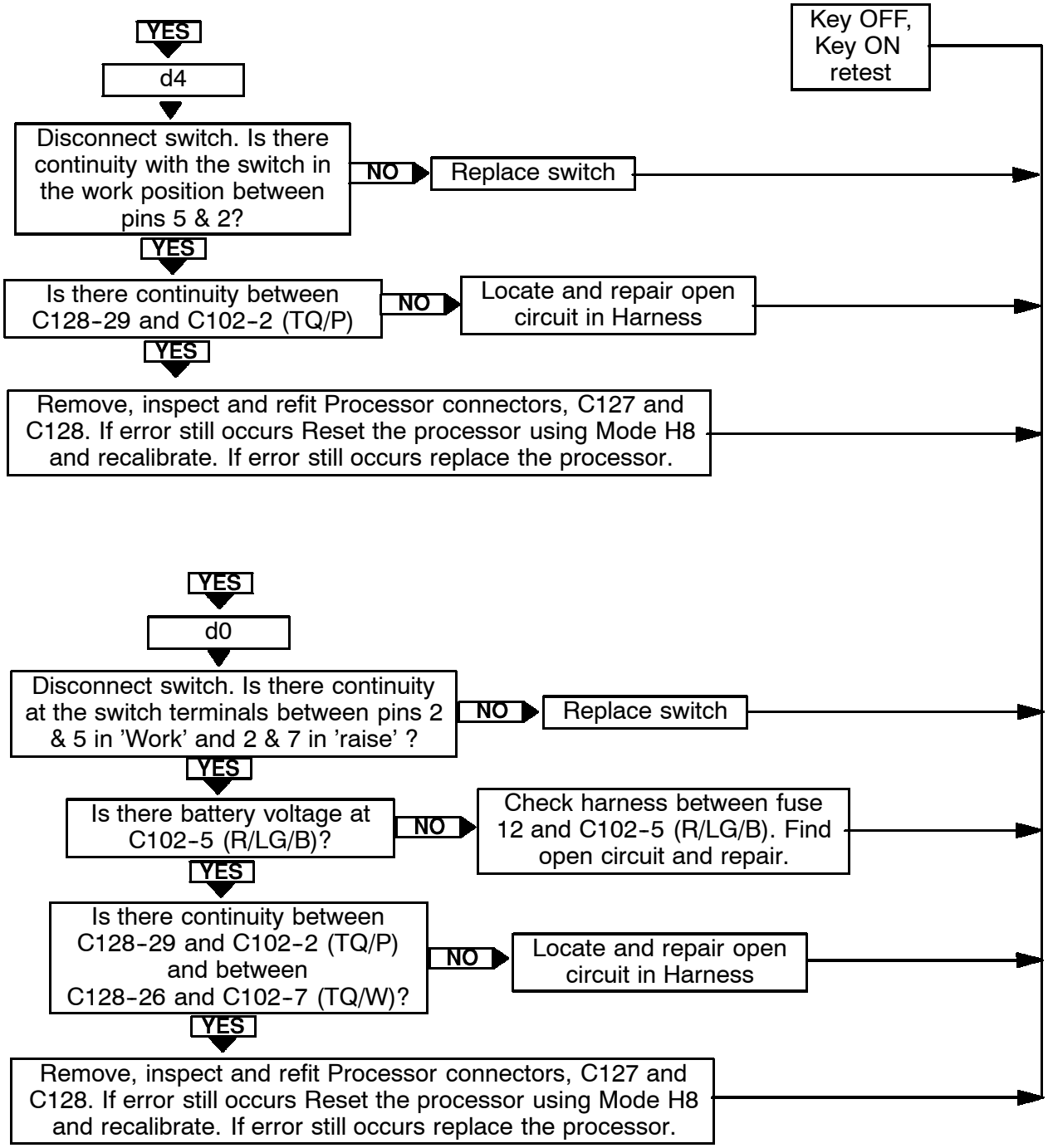

ERROR CODES 9 – Both external switches operated together

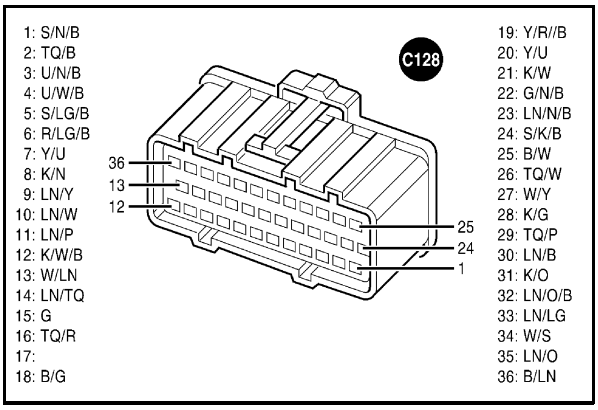

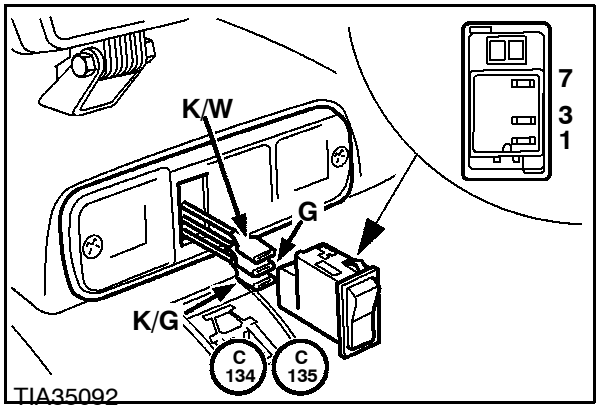

ERROR CODES 9 – Both external switches operated together

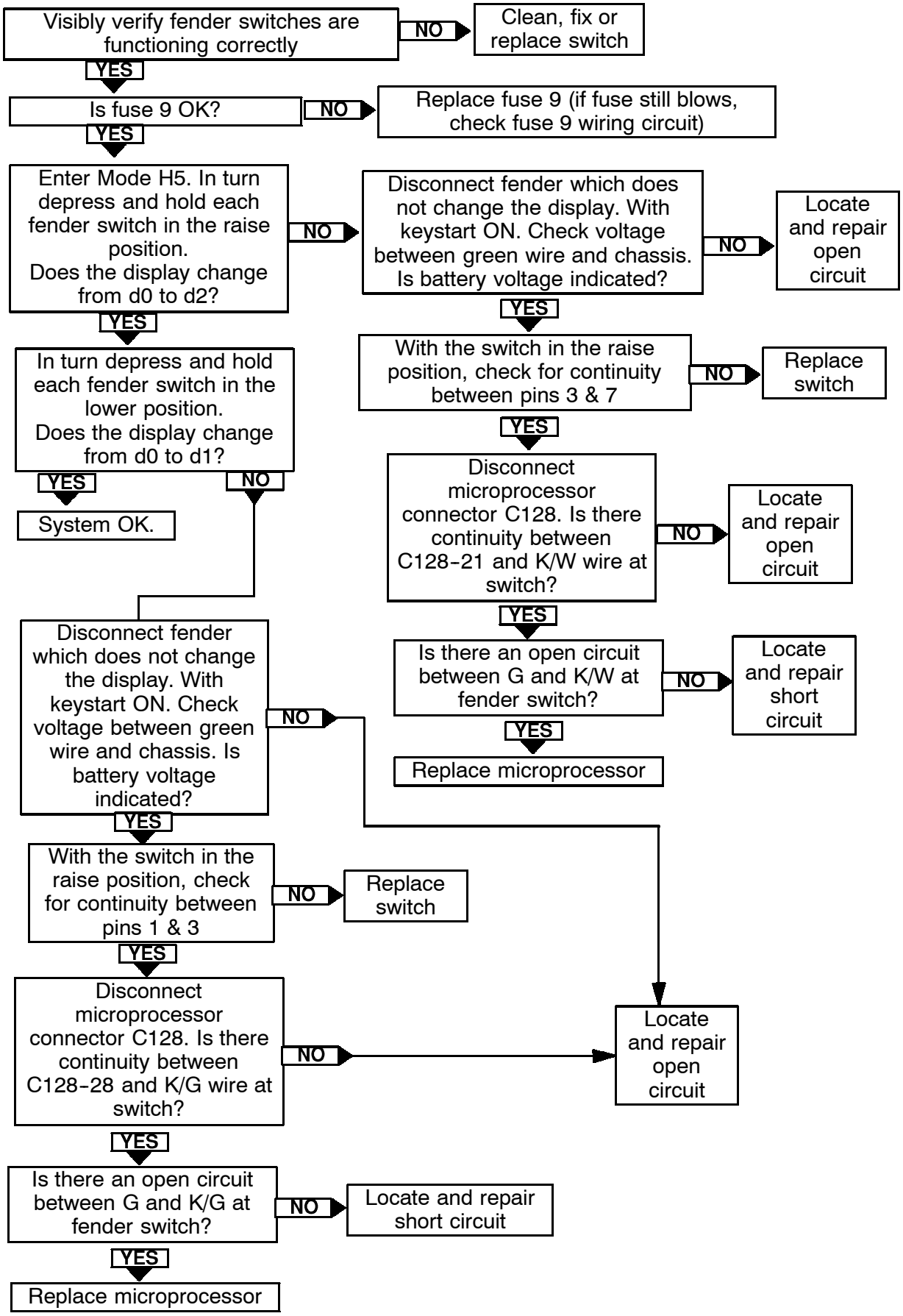

ERROR CODES 10 & 11

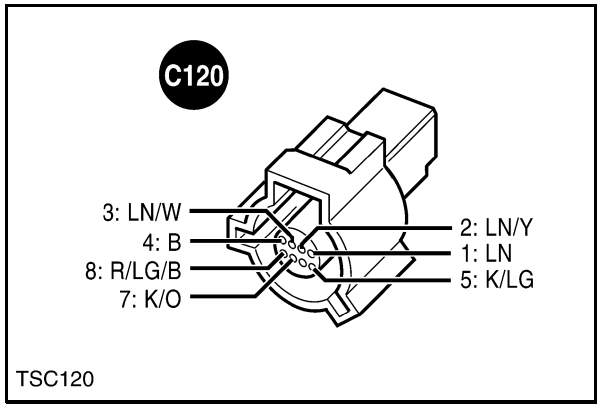

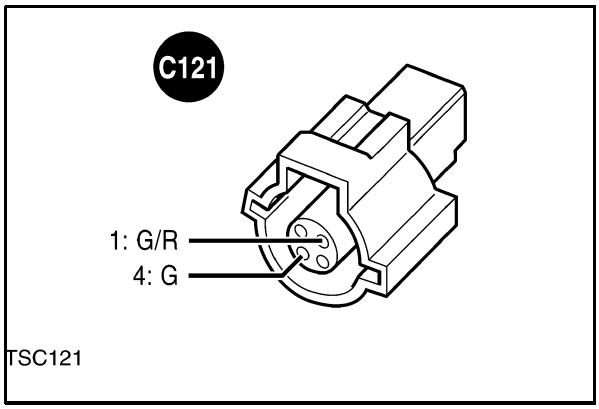

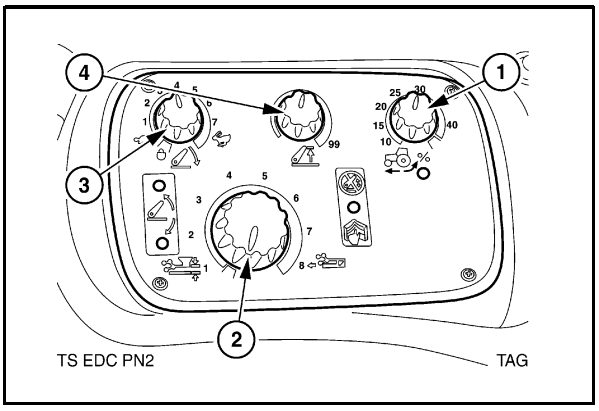

ERROR CODES 10 & 11 - Height limit control potentiometer failed

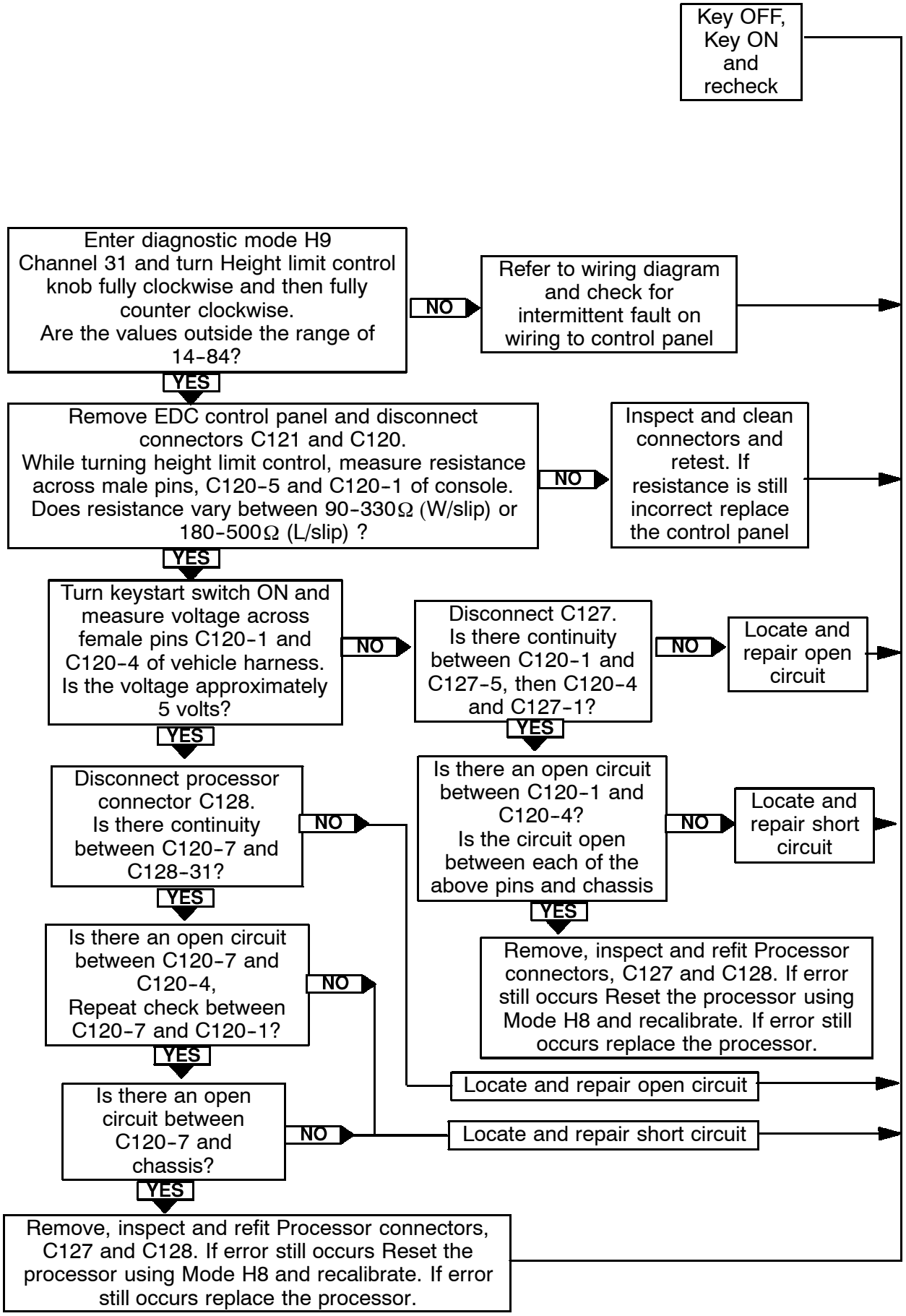

ERROR CODES 12 & 13

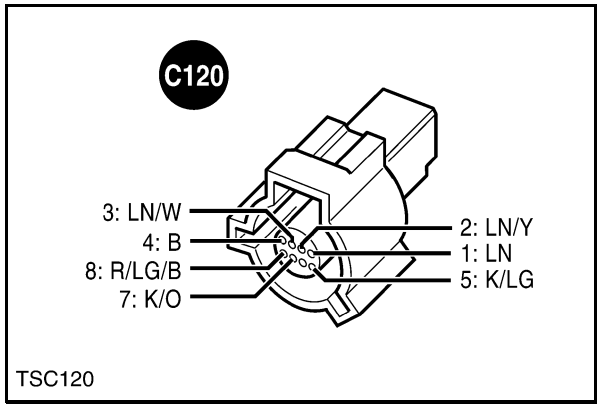

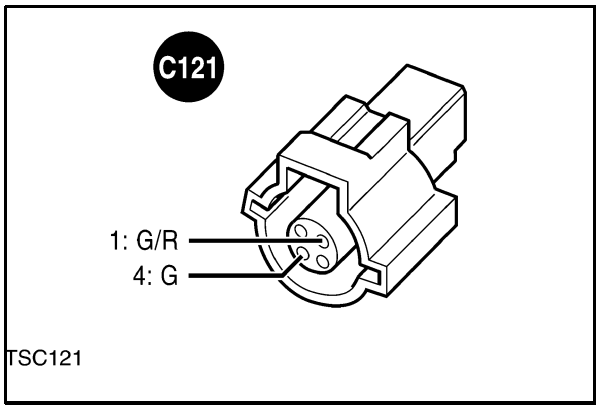

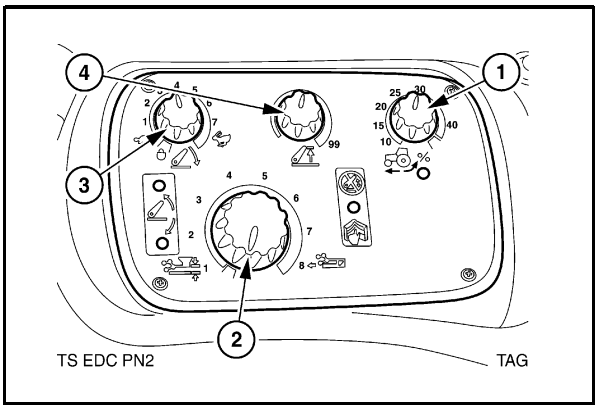

ERROR CODES 12 & 13 - Drop Rate control potentiometer failed

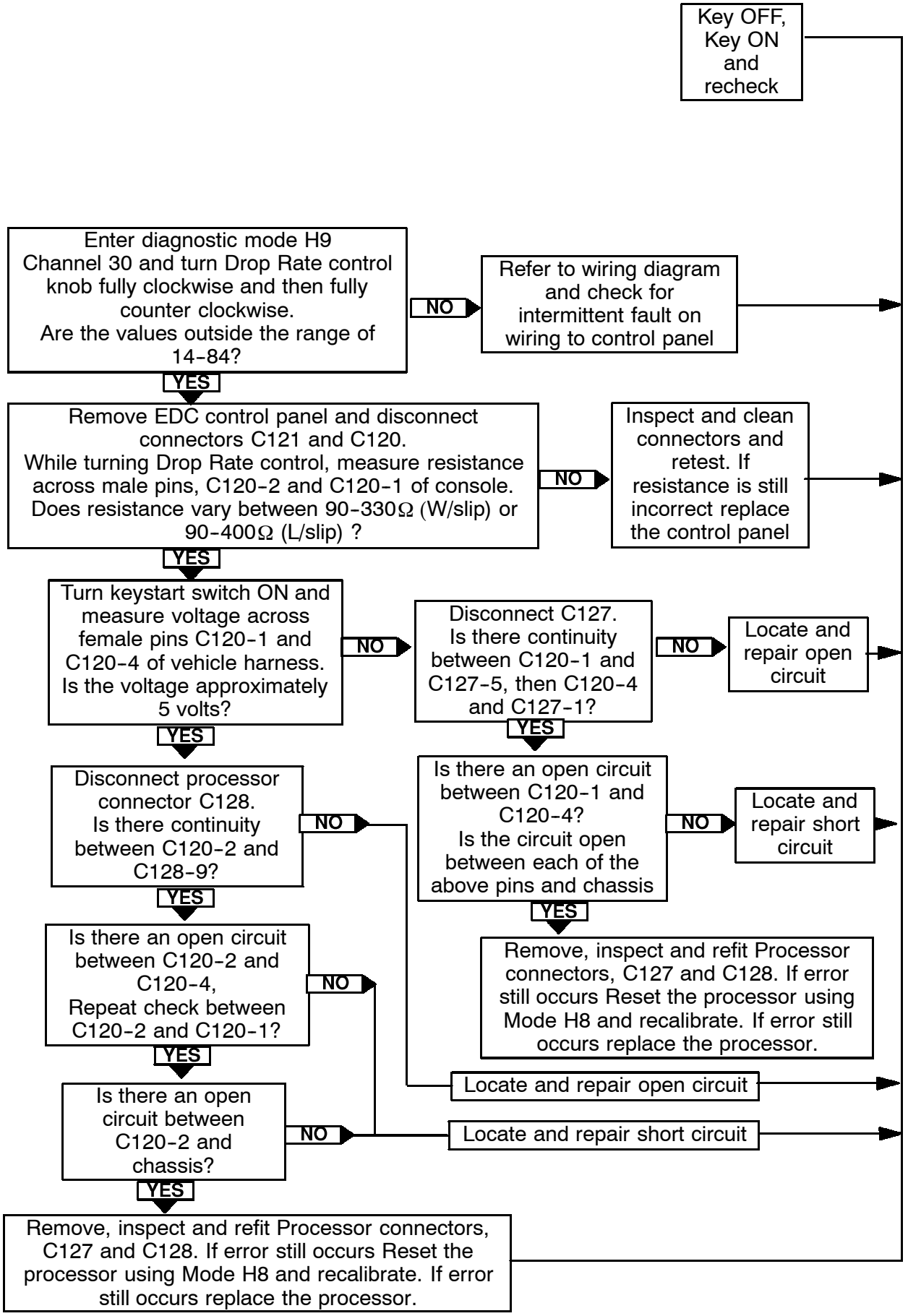

ERROR CODES 14 & 15 – R.H. Load Sensing Pin or Circuit Failed

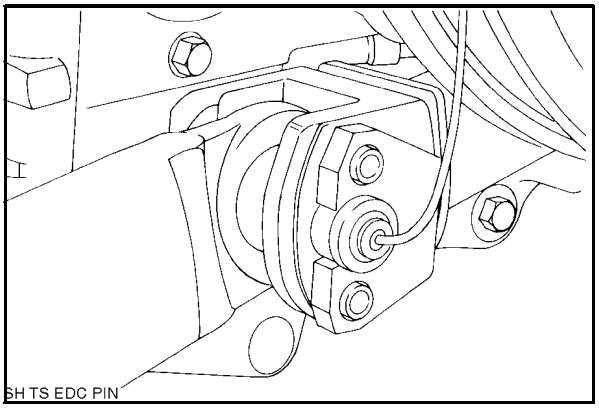

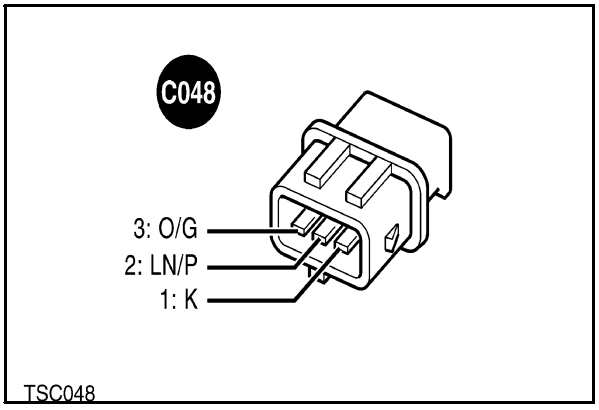

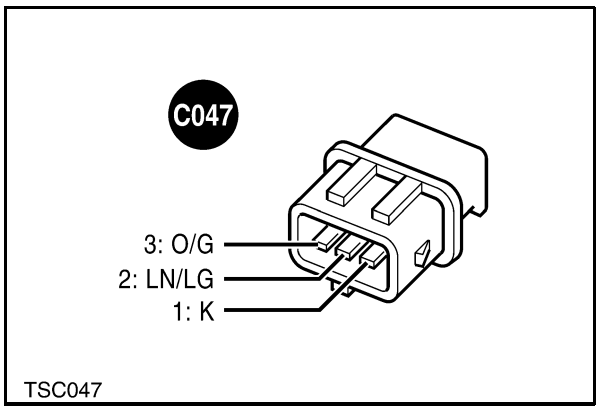

ERROR CODES 14 & 15 – R.H. Load Sensing Pin or Circuit Failed

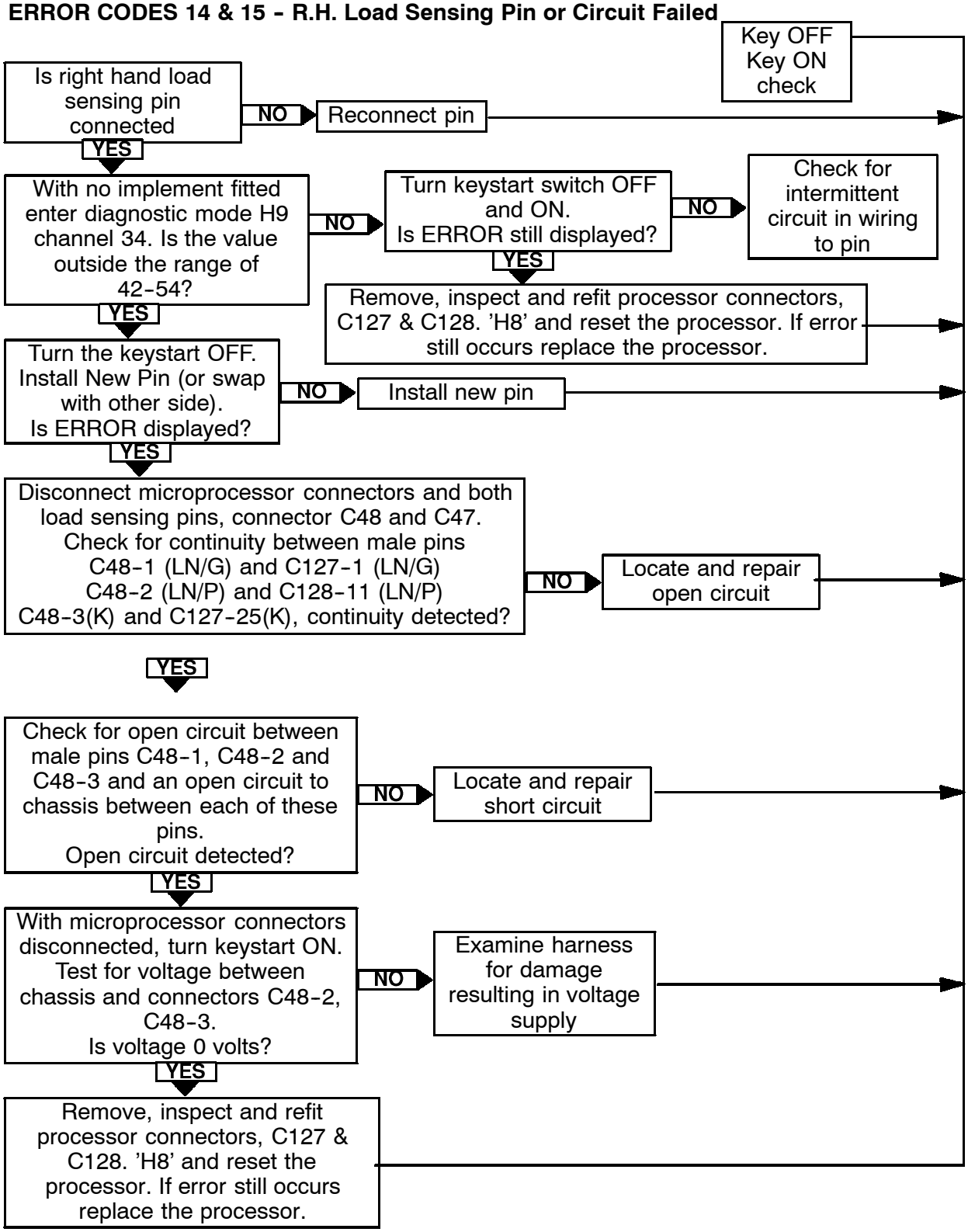

ERROR CODES 16 & 17 – L.H. Load Sensing Pin or Circuit Failed

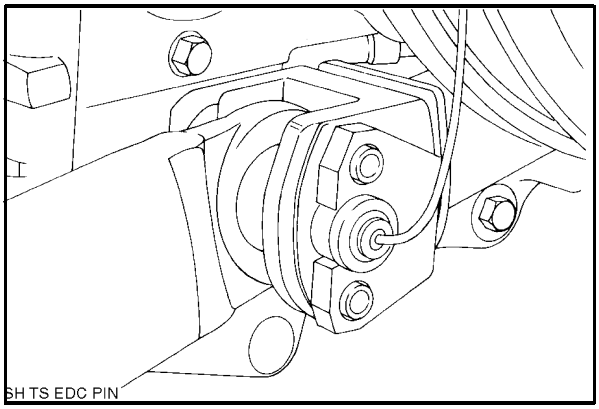

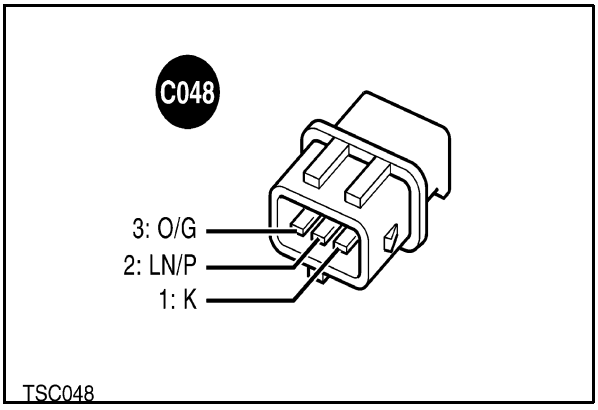

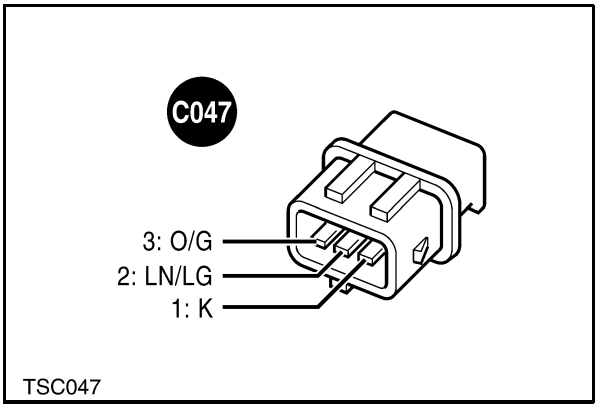

ERROR CODES 16 & 17 – L.H. Load Sensing Pin or Circuit Failed

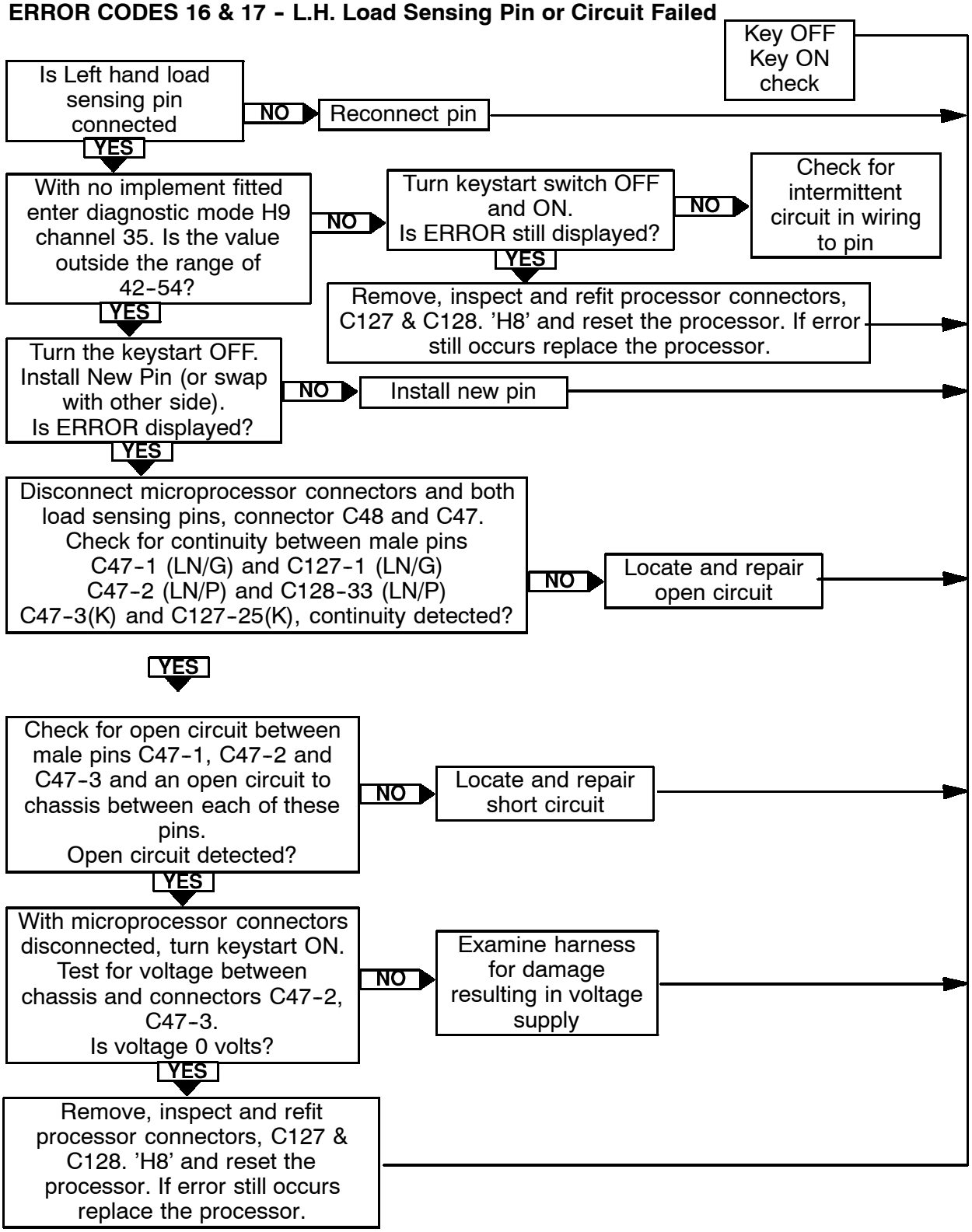

ERROR CODES 18 – Both load sensing pins disconnected

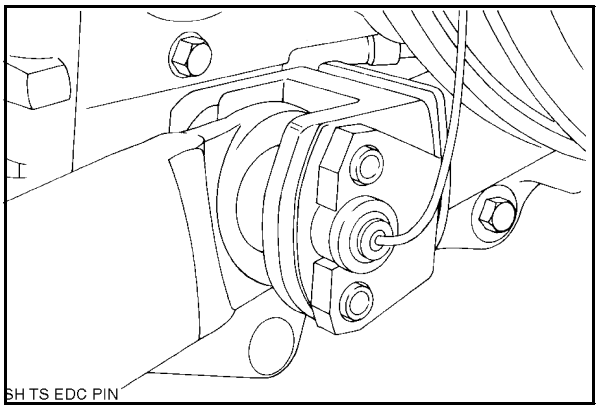

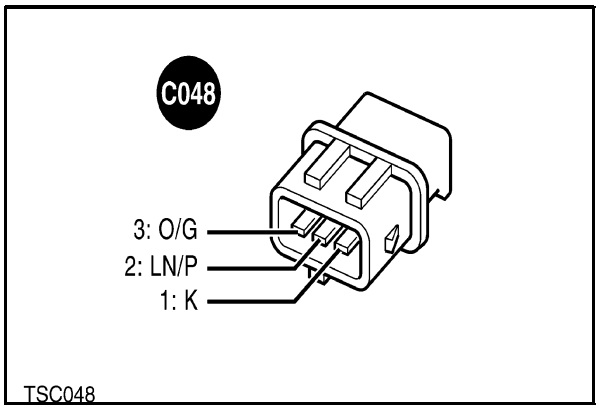

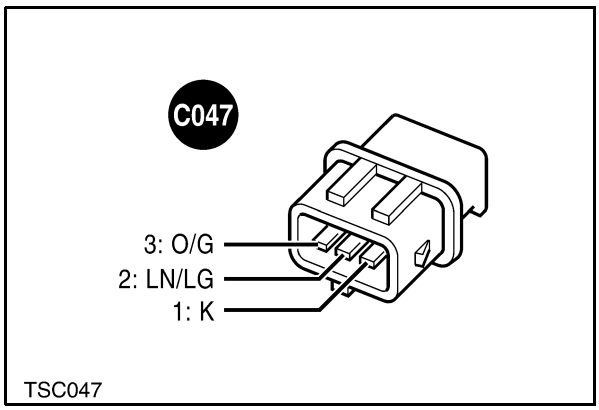

ERROR CODES 18 – Both load sensing pins disconnected

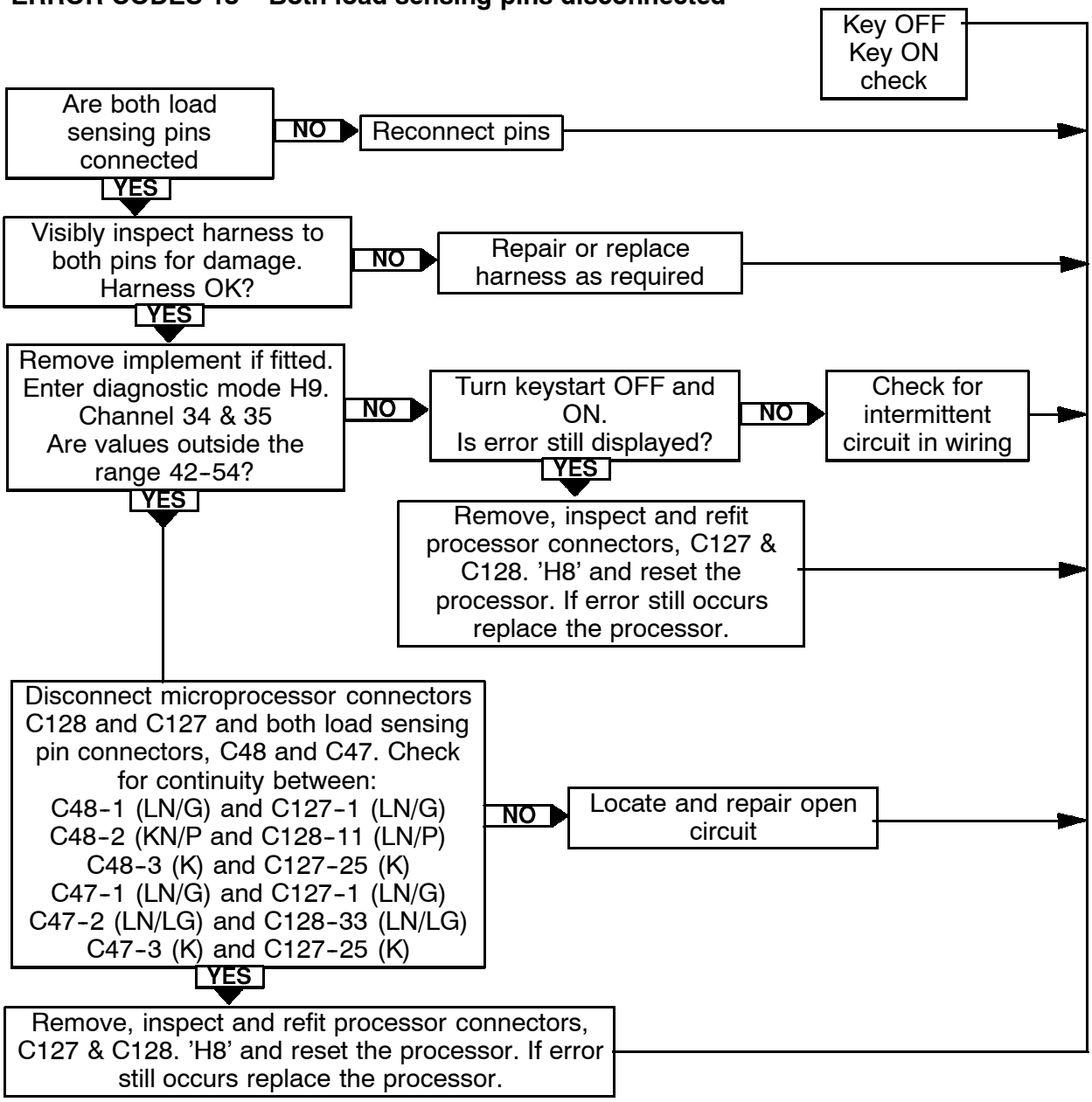

ERROR CODES 19 & 20 – Incorrect load sensing pin reference voltage

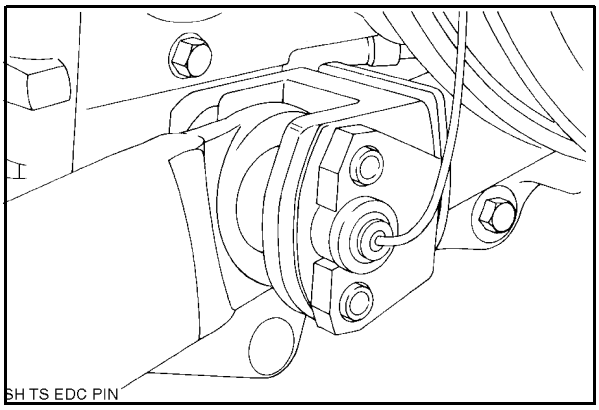

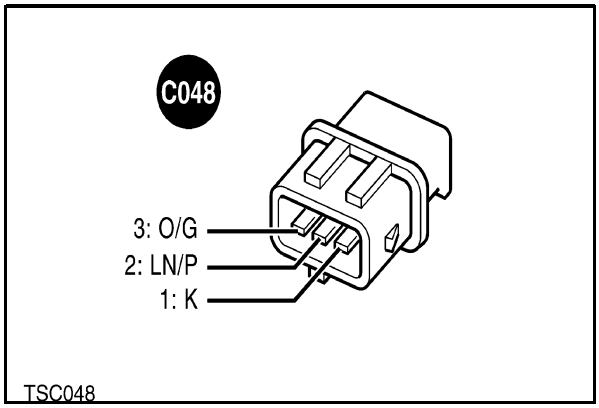

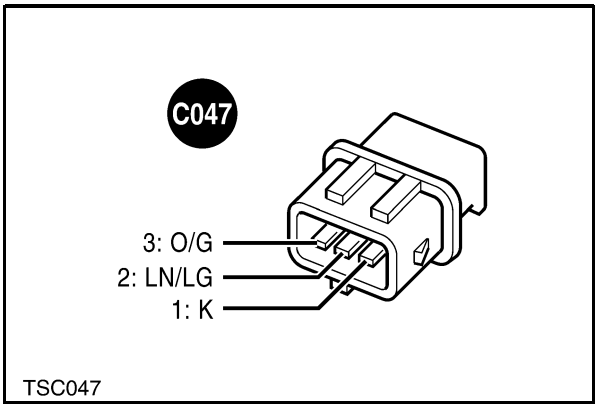

ERROR CODES 19 & 20 – Incorrect load sensing pin reference voltage

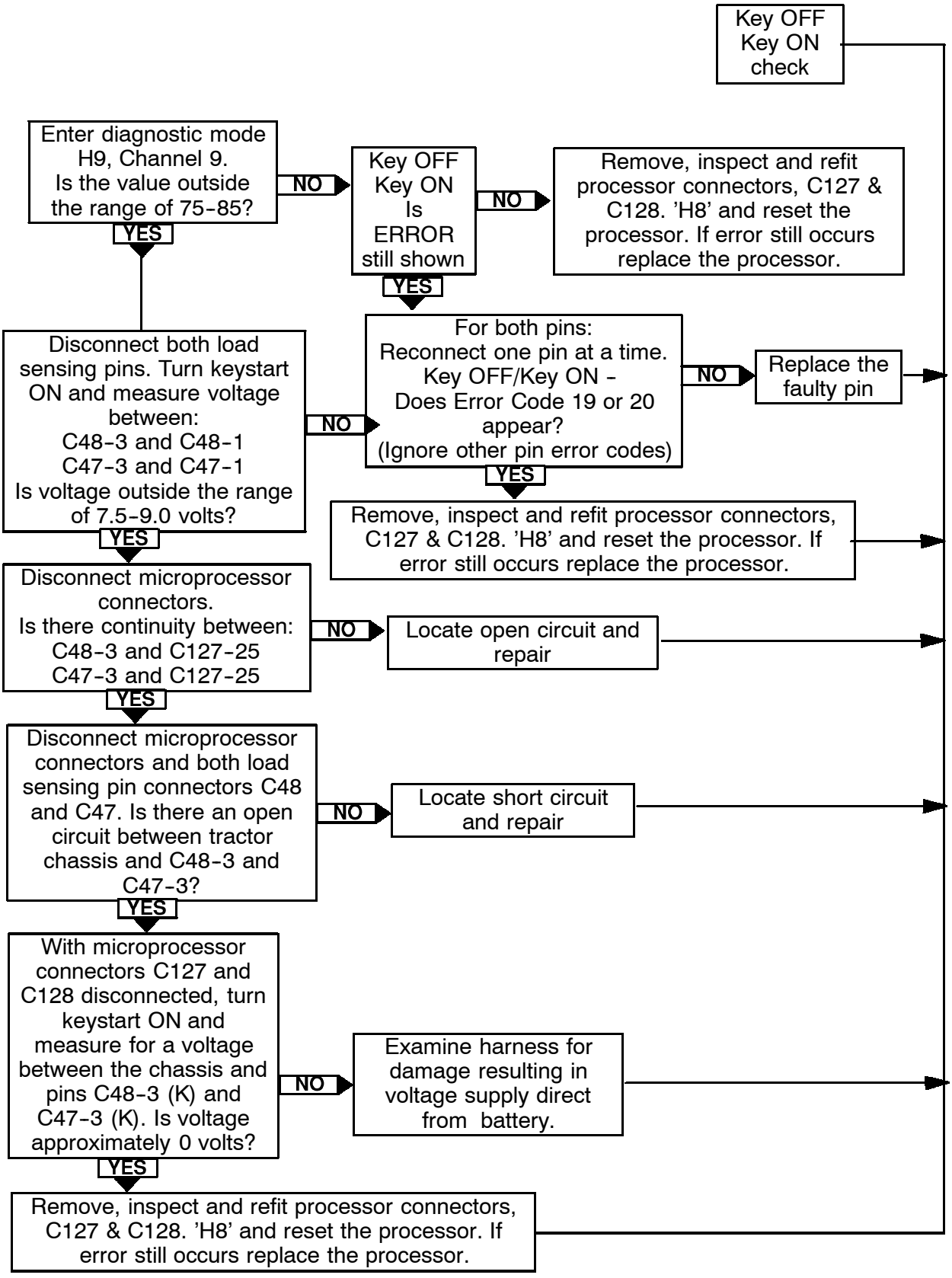

ERROR CODES 21 & 22

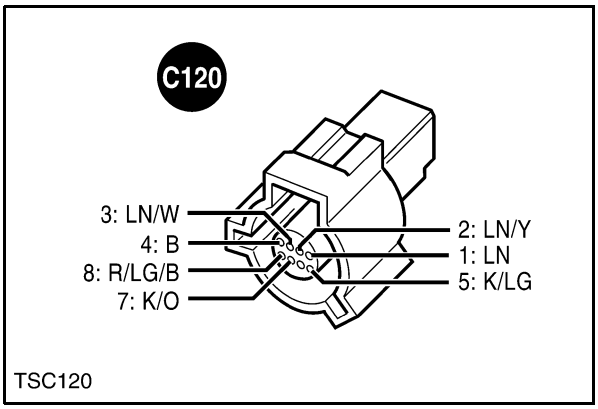

TSC120

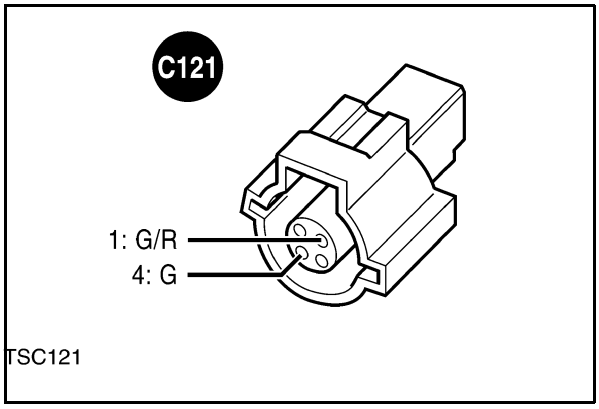

TSC121

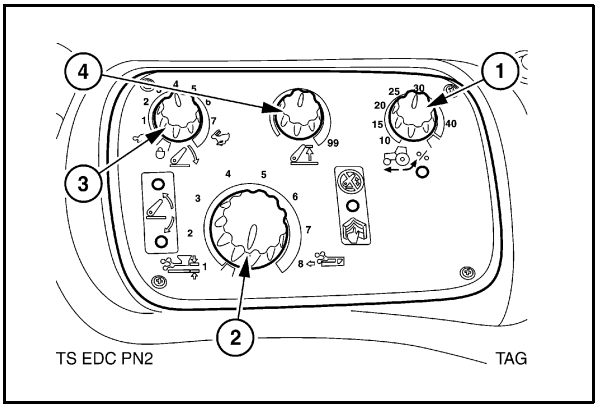

ERROR CODES 21 & 22 – Position/draft sensitivity control potentiometer or circuit failed

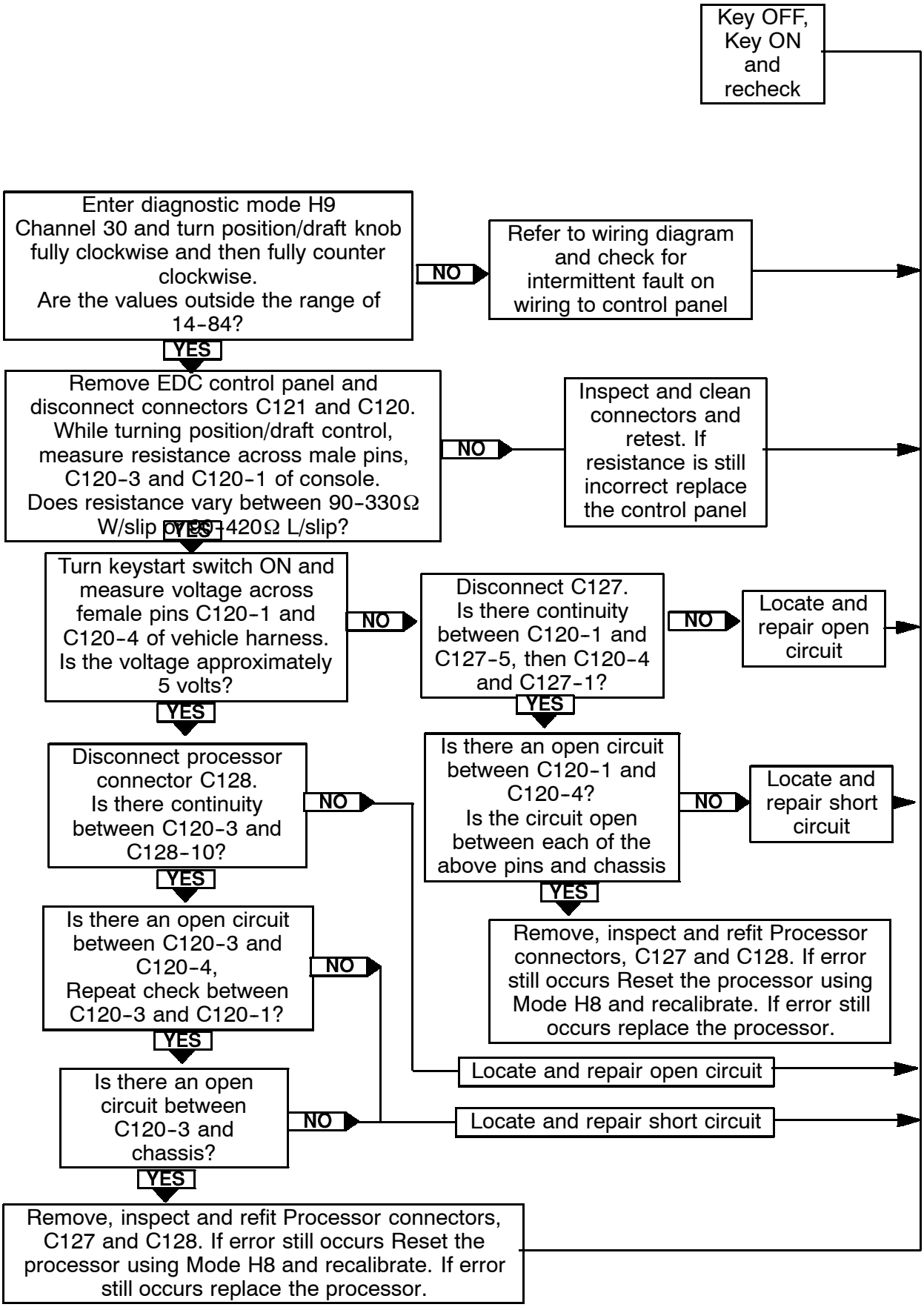

ERROR CODES 23 – Control panel disconnected

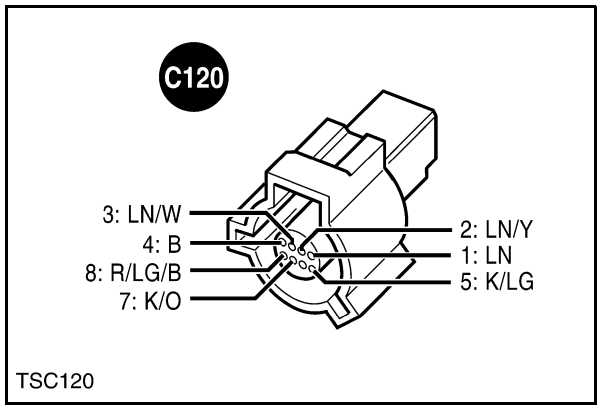

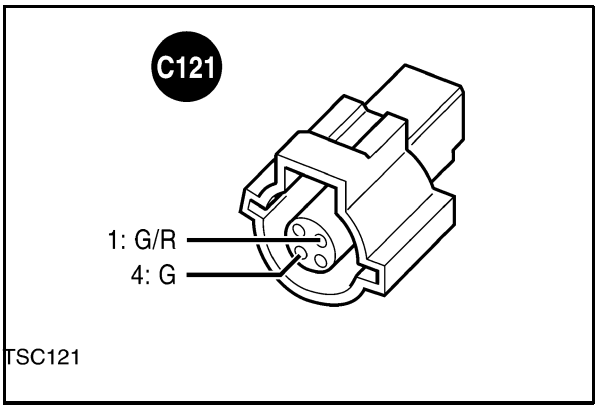

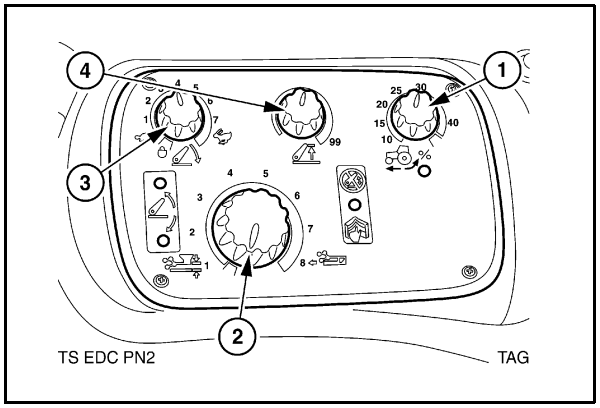

ERROR CODES 23 – Control panel disconnected

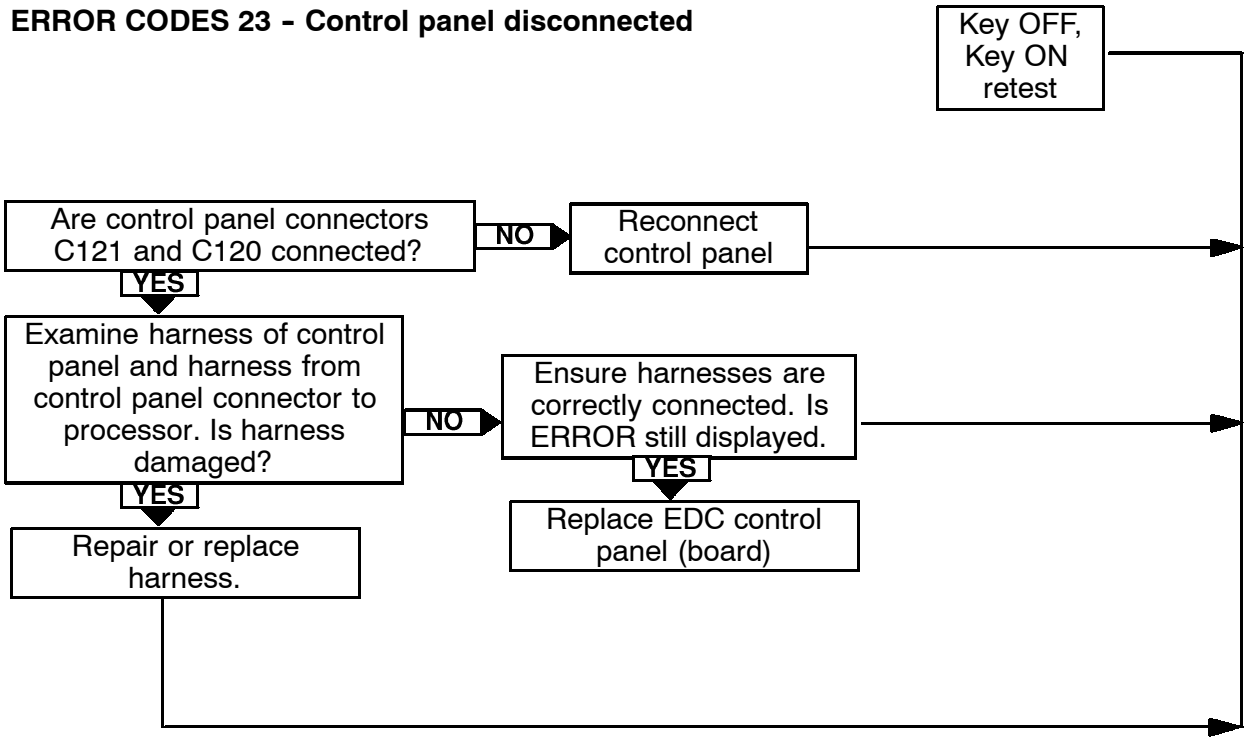

ERROR CODE 24 –

Perform hydraulic lift calibration after replacement of lift arm potentiometer, microprocessor, lift lever potentiometer.

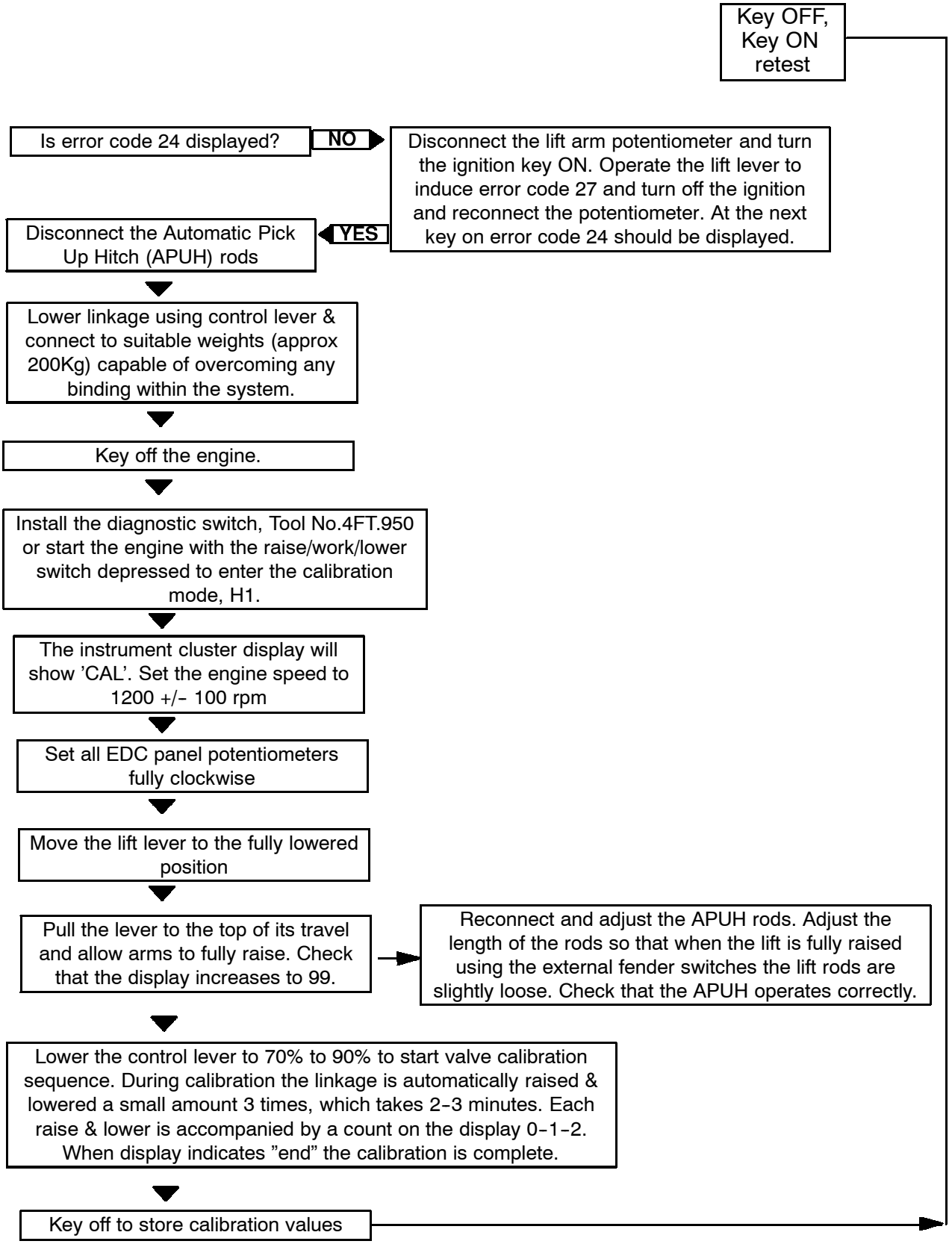

ERROR CODES 25 & 26 – Lift control lever potentiometer disconnected or circuit failed

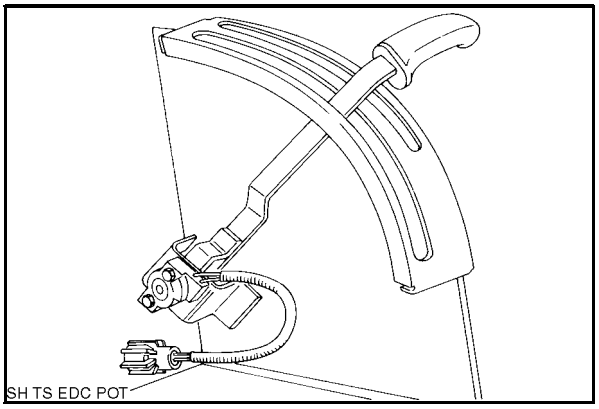

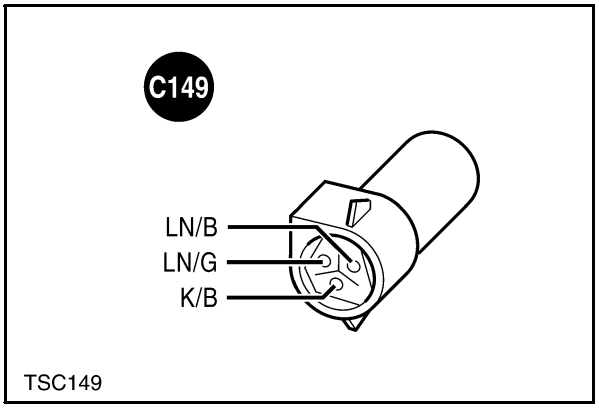

ERROR CODES 25 & 26 – Lift control lever potentiometer disconnected or circuit failed

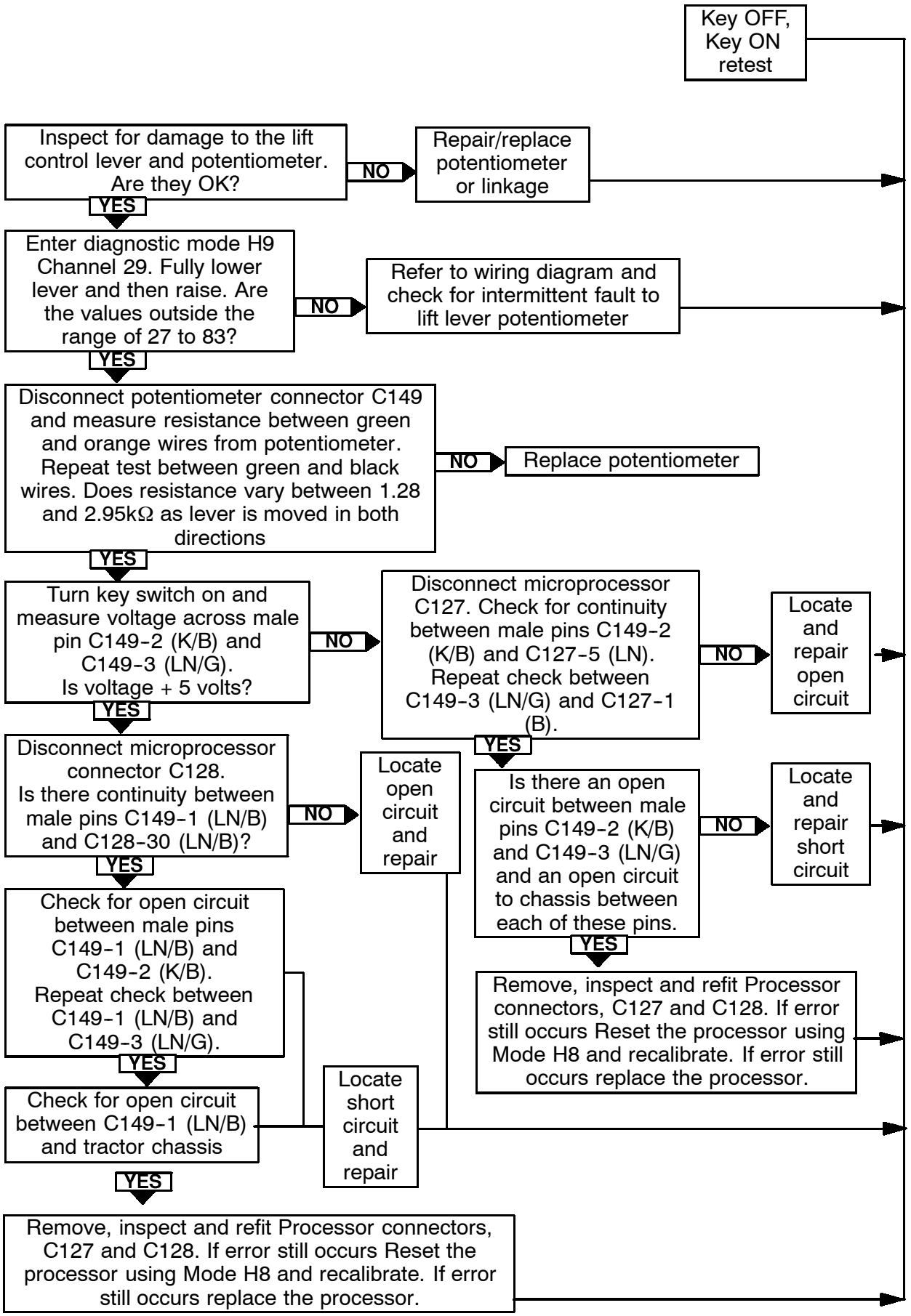

ERROR CODES 27 & 28 – Lift arm potentiometer sensing potentiometer disconnected or circuit failed

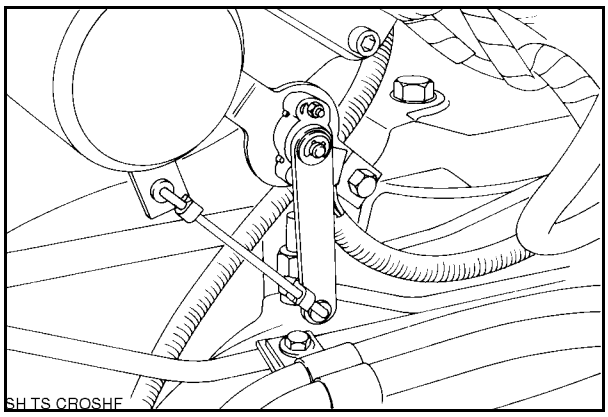

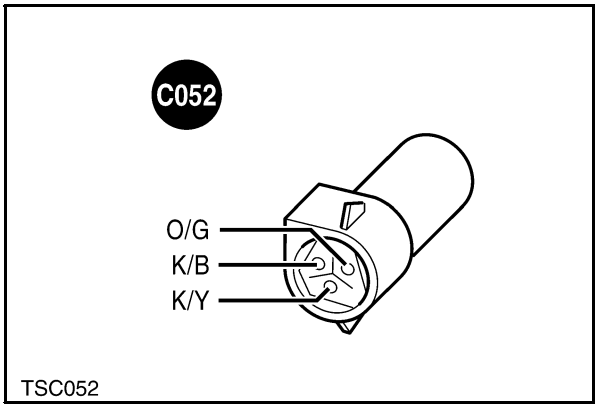

ERROR CODES 27 & 28 – Lift arm potentiometer sensing potentiometer disconnected or circuit failed

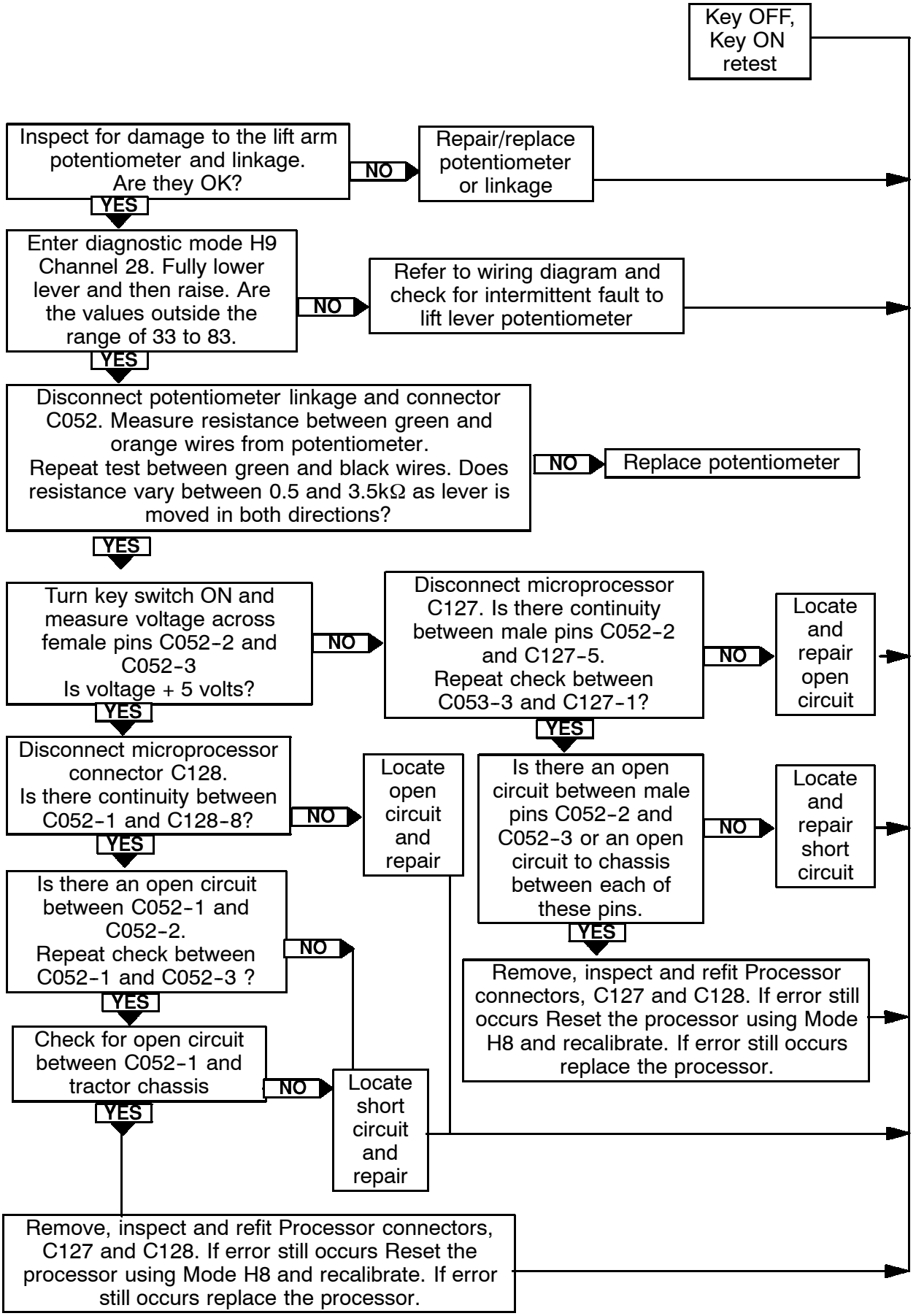

ERROR CODE 29 – Hydraulic control valve disconnected

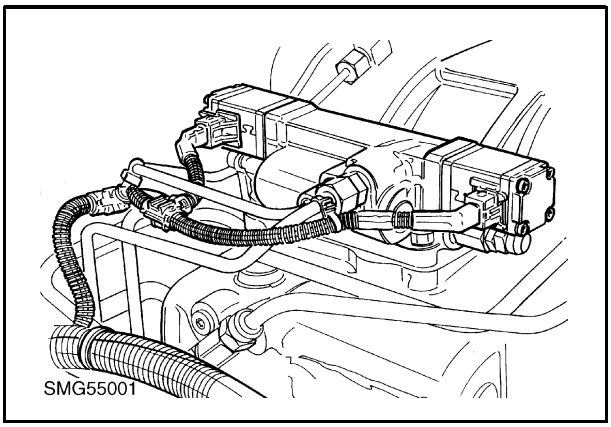

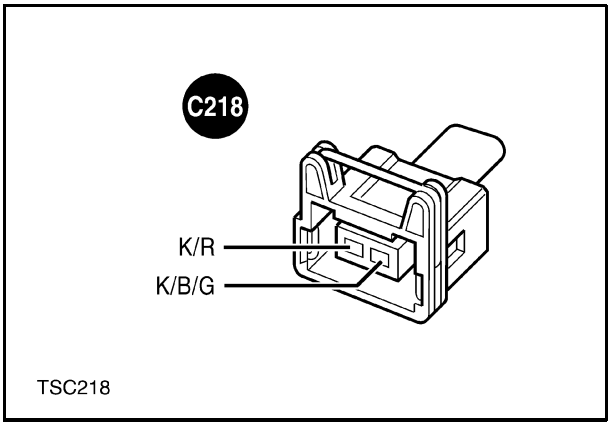

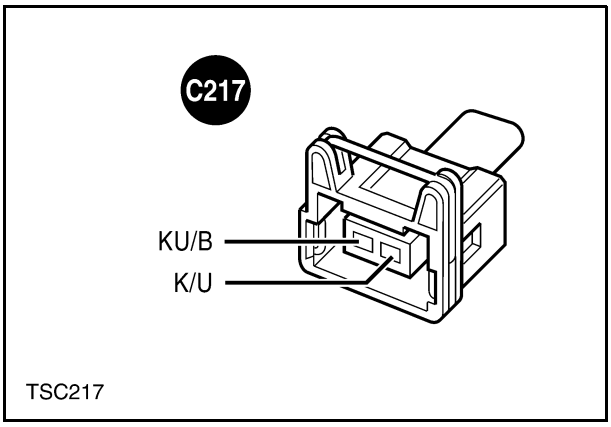

ERROR CODE 29 – Hydraulic control valve disconnected

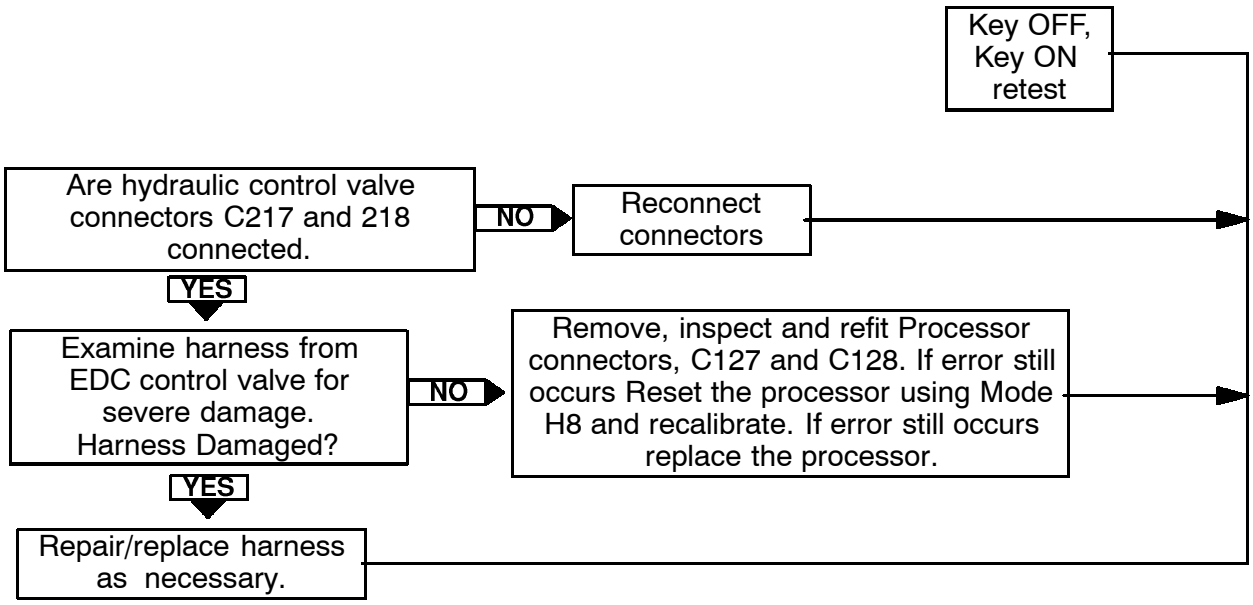

ERROR CODE 30 – Signal ground open circuit

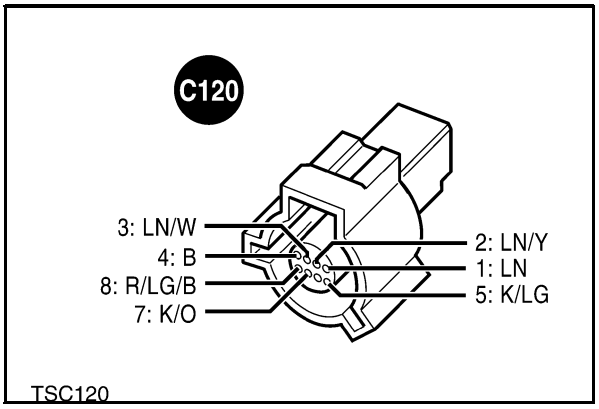

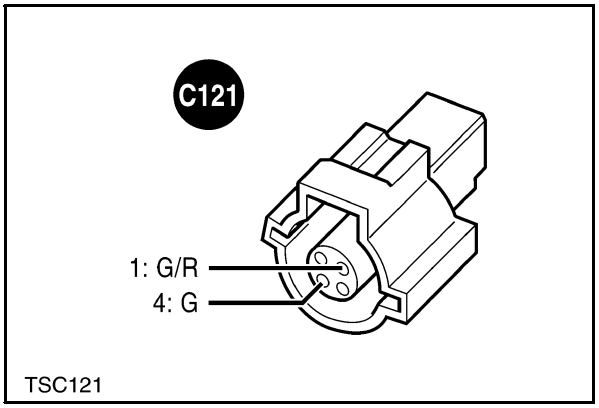

ERROR CODE 30 – Signal ground open circuit

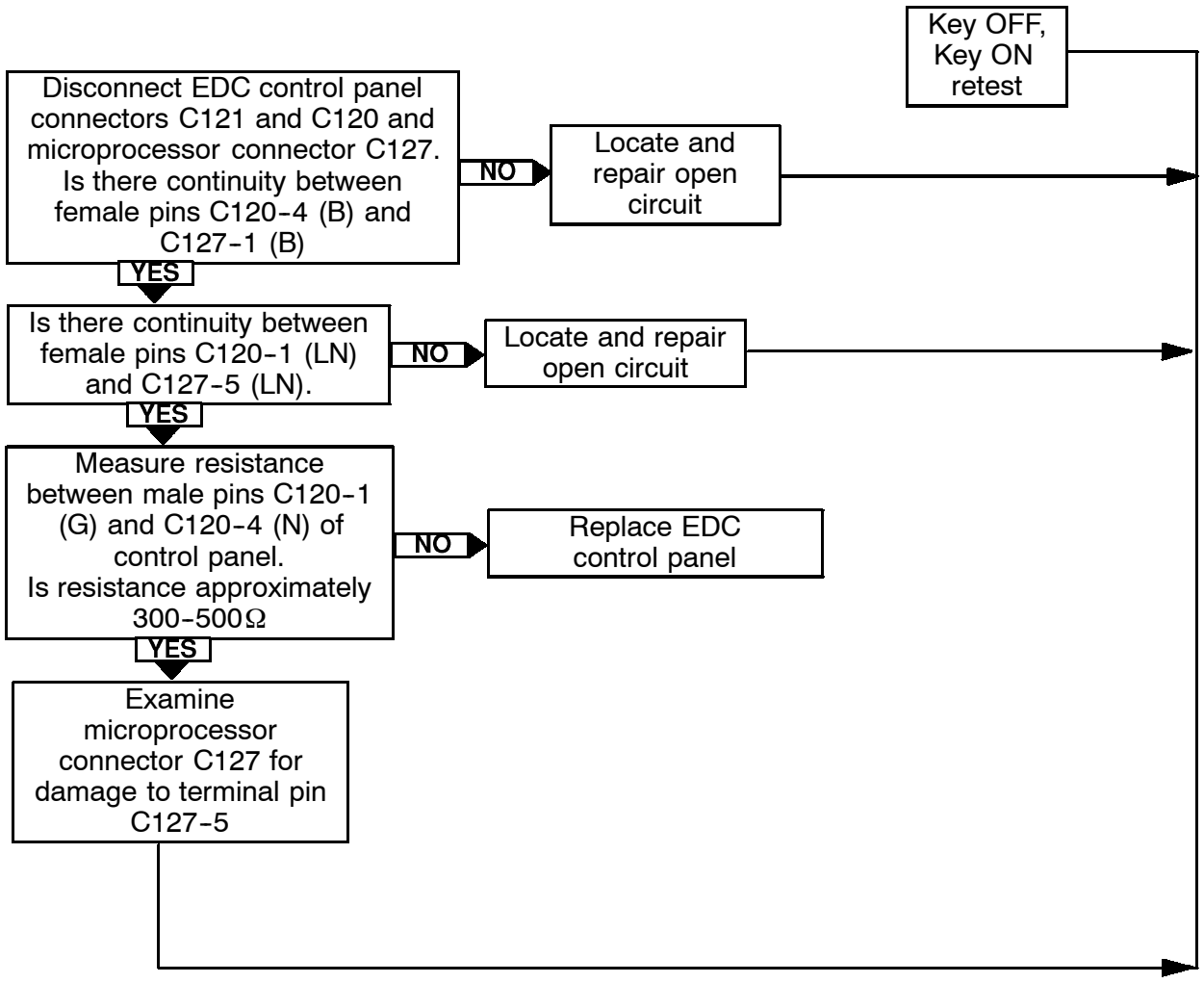

ERROR CODES 31 – Drive line / EDC harness disconnected

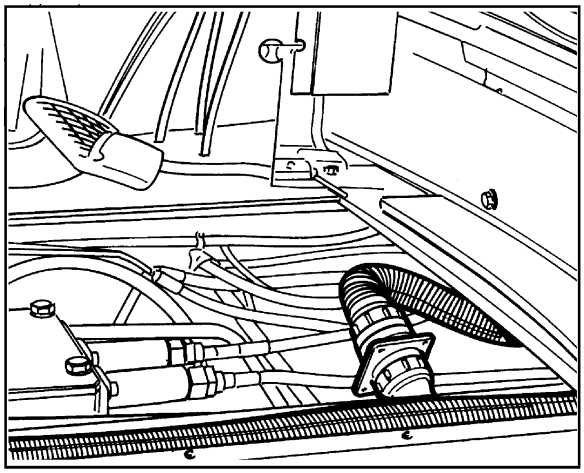

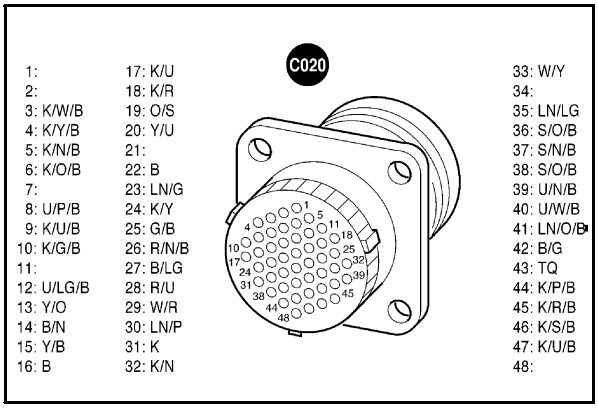

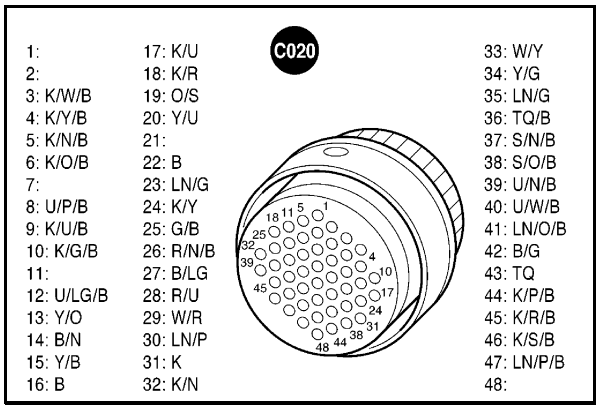

ERROR CODES 31 – Drive line / EDC harness disconnected

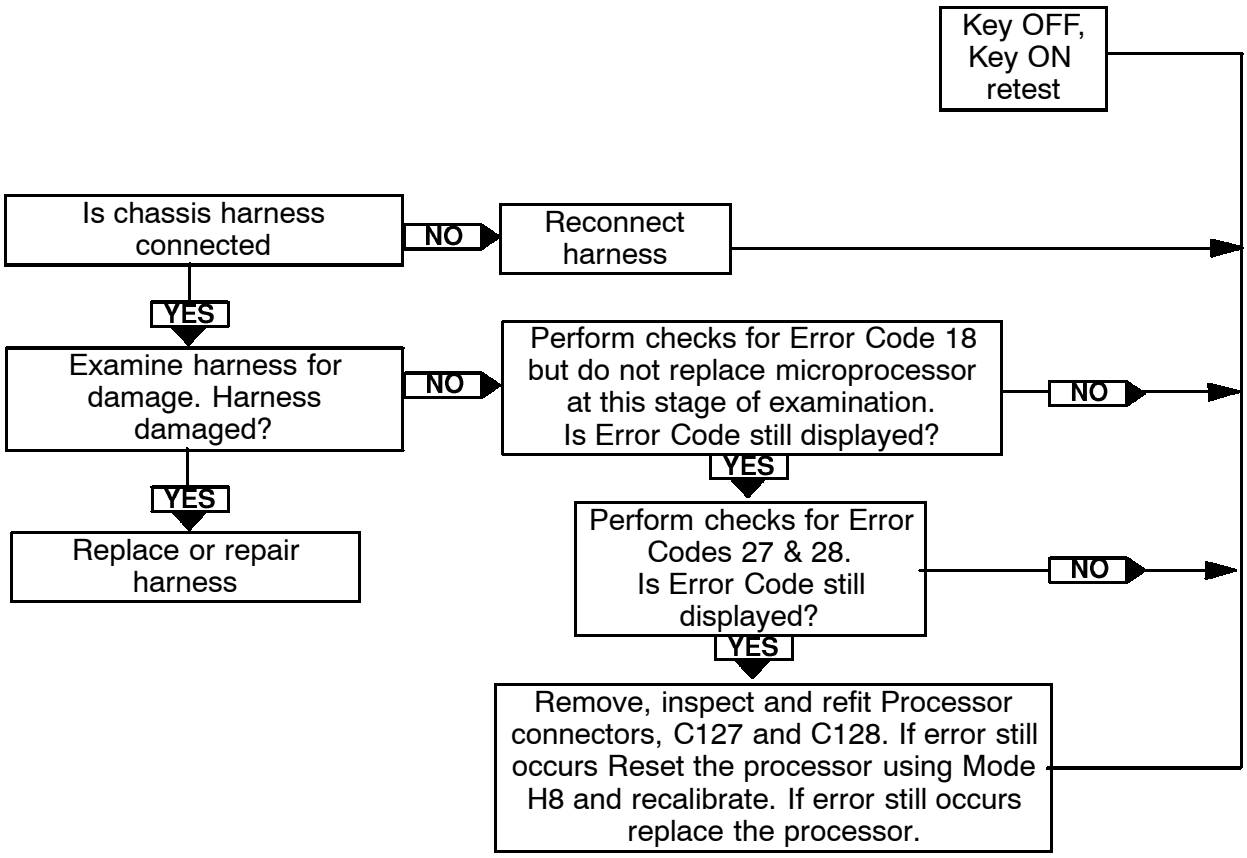

ERROR CODES 49 – Wheel speed sensor open or short circuit

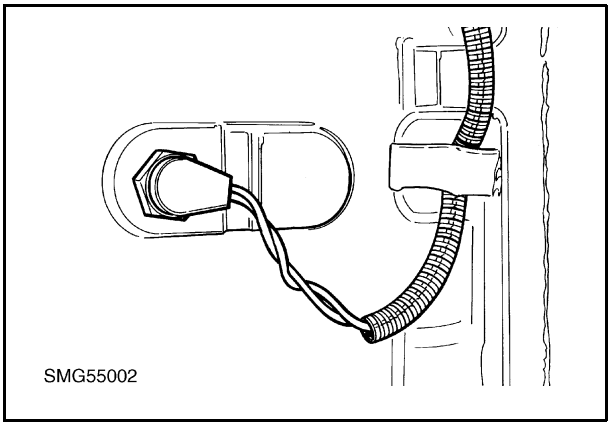

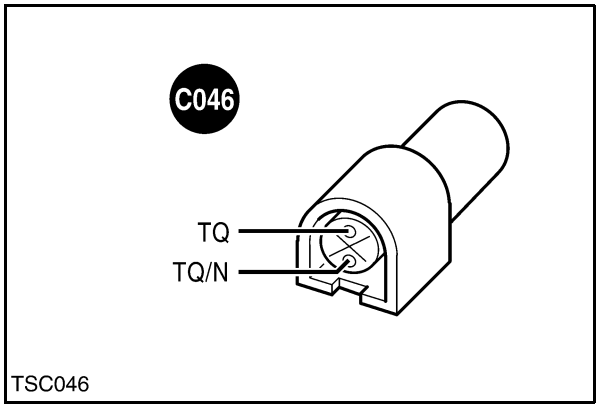

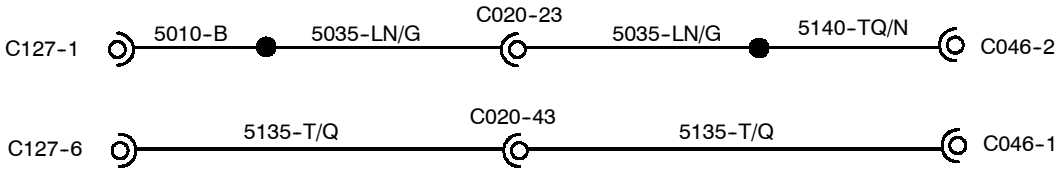

ERROR CODES 49 – Wheel speed sensor open or short circuit

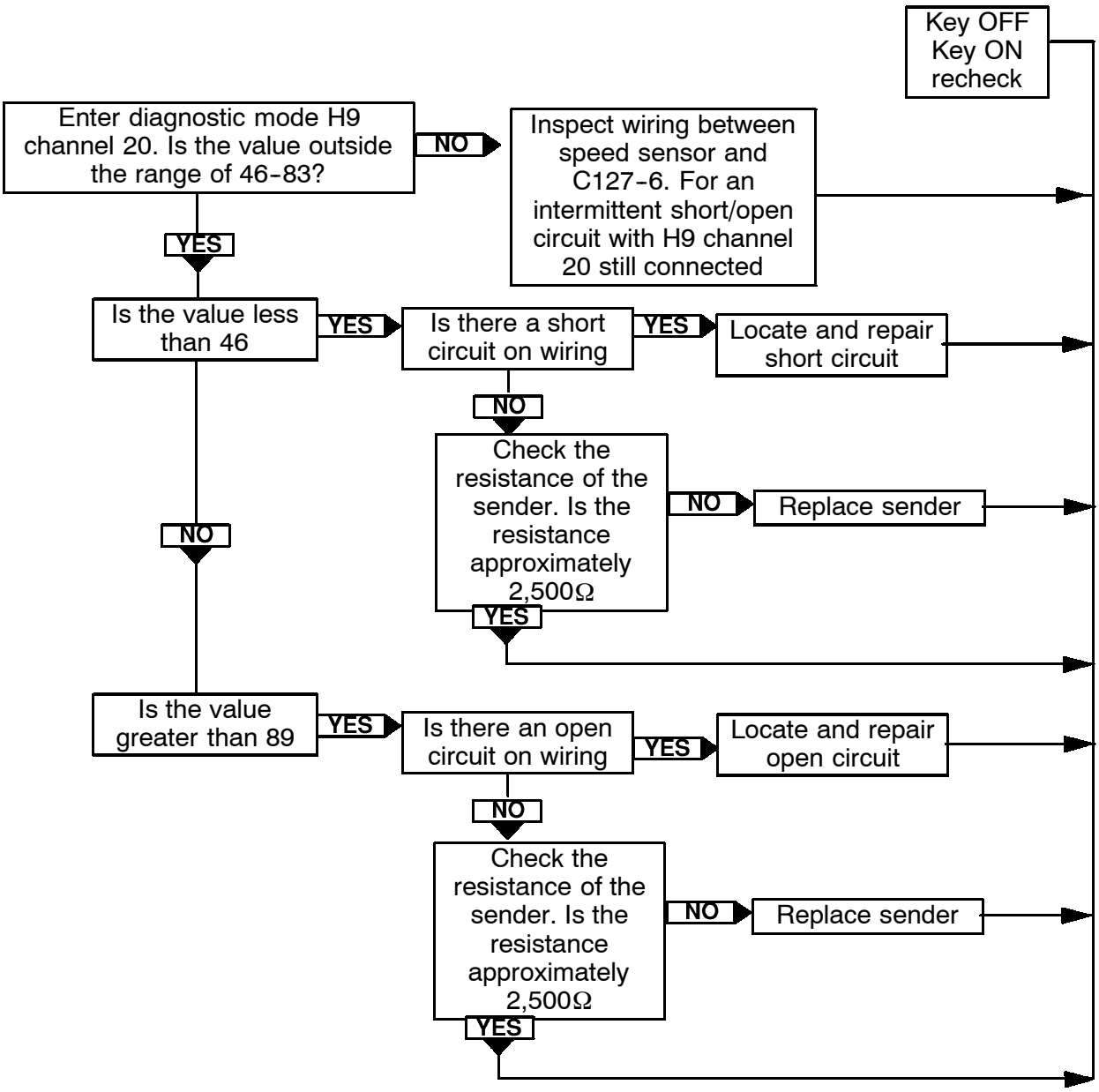

ERROR CODES 53 – Microprocessor 5 volt reference shorted to 12 volt supply

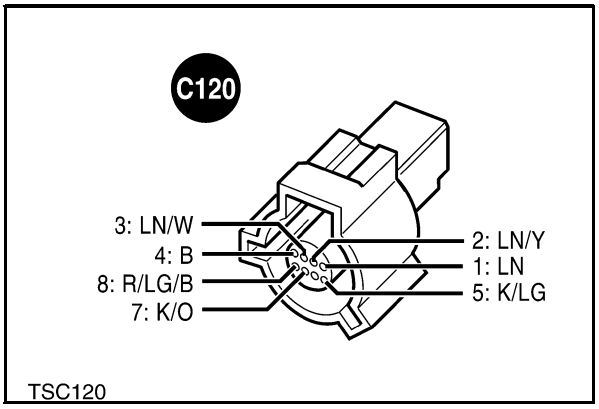

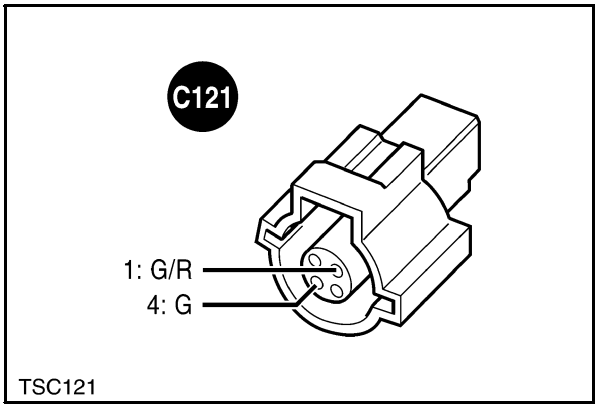

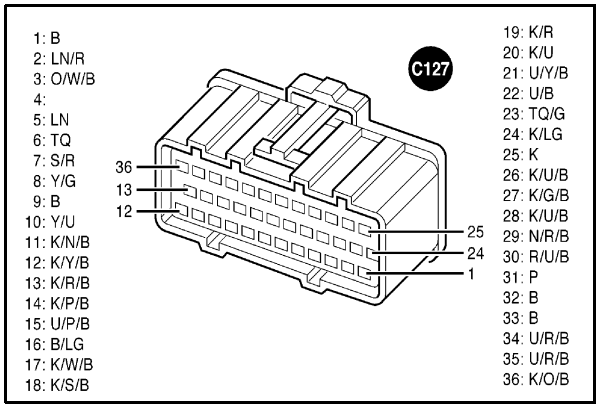

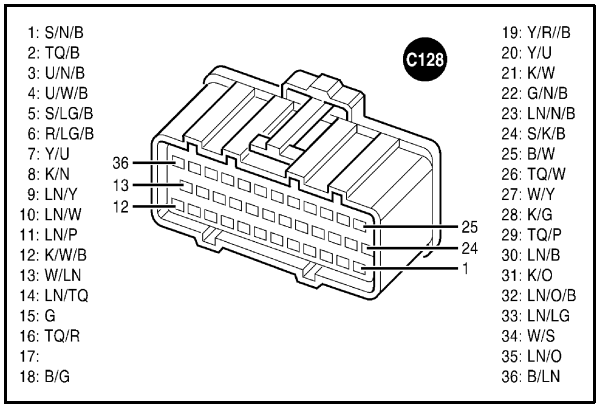

ERROR CODES 53 – Microprocessor 5 volt reference shorted to 12 volt supply

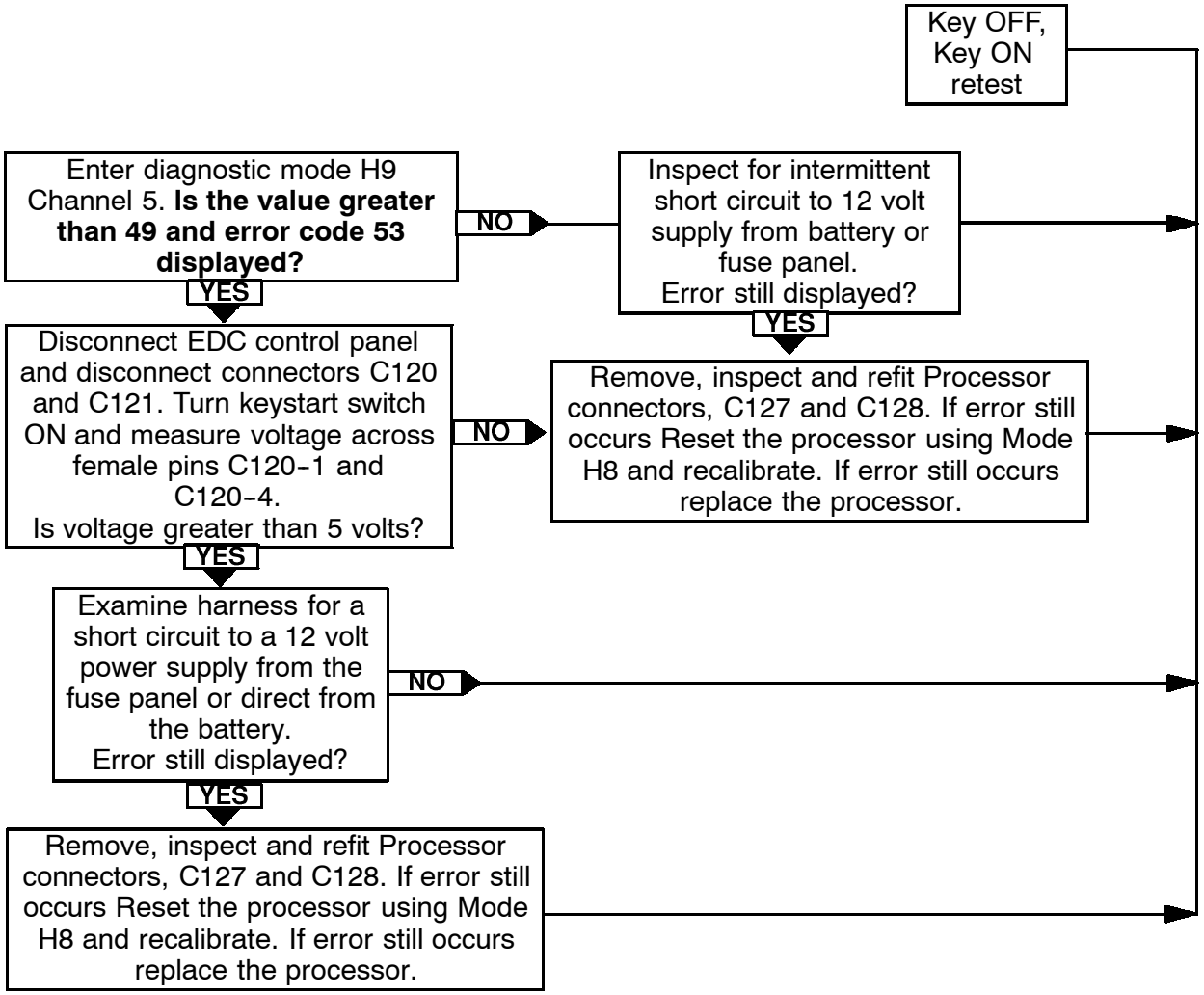

ERROR CODES 54 – Microprocessor 5 volt reference shorted to ground

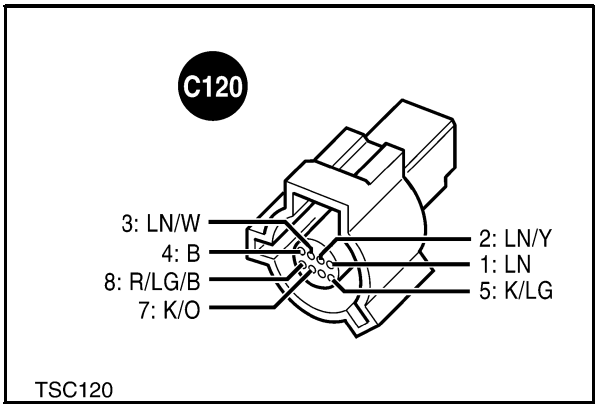

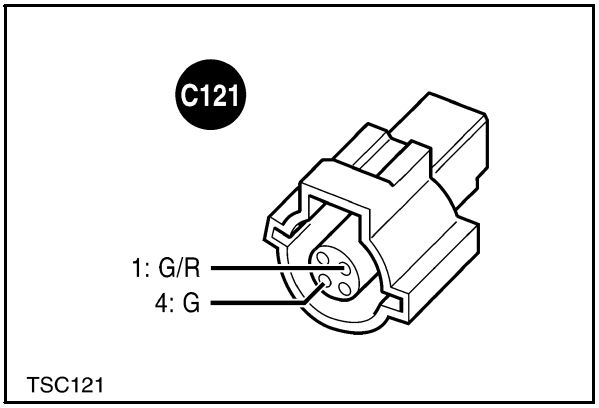

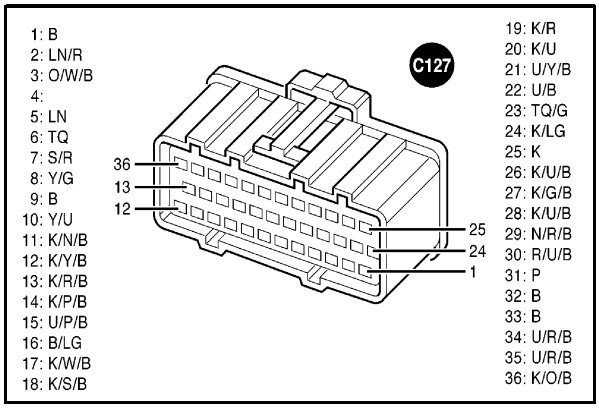

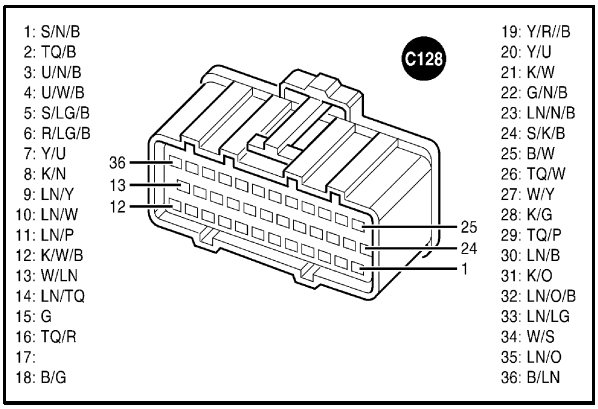

ERROR CODES 54 – Microprocessor 5 volt reference shorted to ground

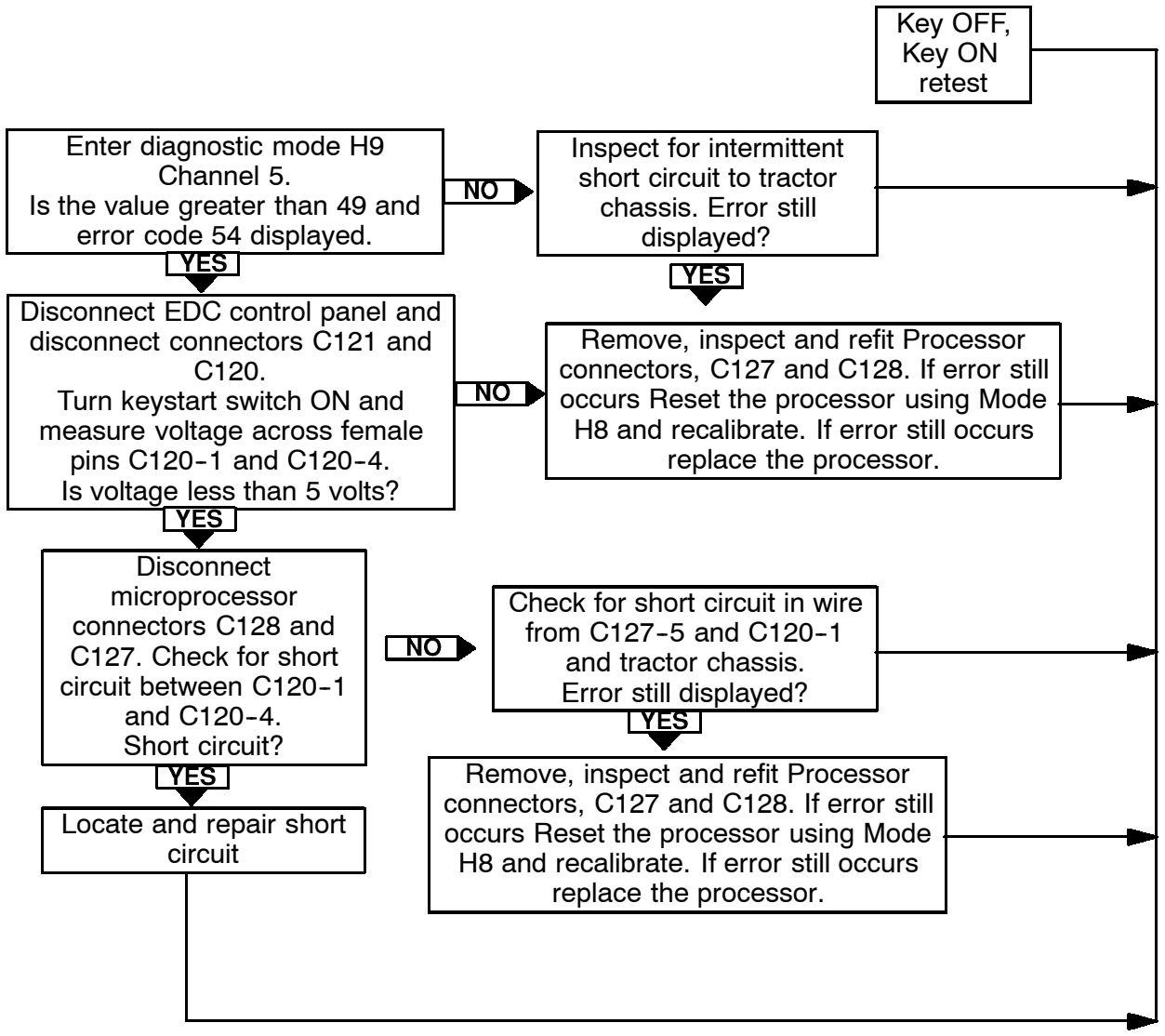

ERROR CODES 57 – EDC Microprocessor failure

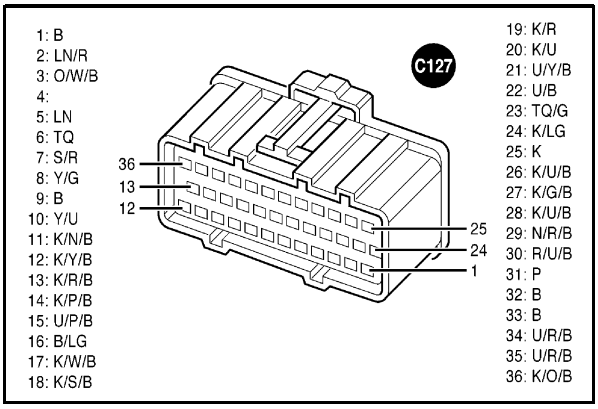

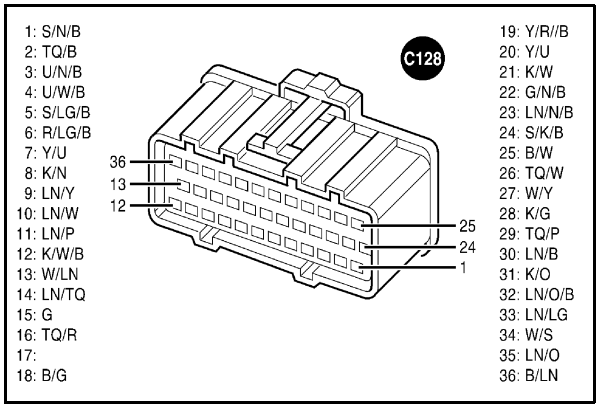

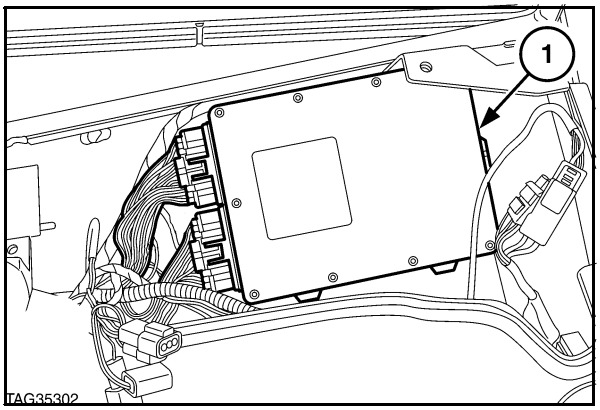

ERROR CODES 57 – EDC Microprocessor failure

Remove, inspect and refit Processor connectors, C127 and C128. If error still occurs Reset the processor using Mode H8 and recalibrate. If error still occurs replace the processor.

Check and replace fuse 14 if necessary

ERROR CODES 59 – Microprocessor reference voltage open circuit.

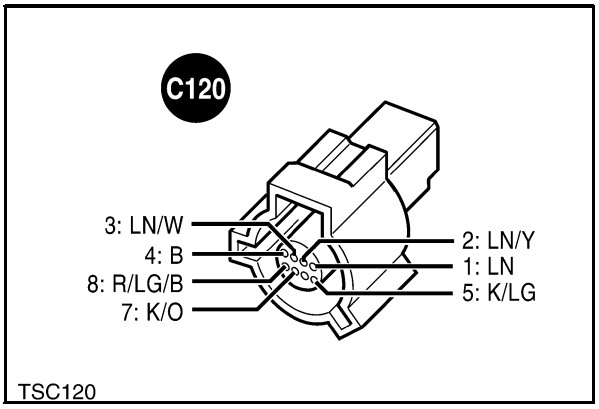

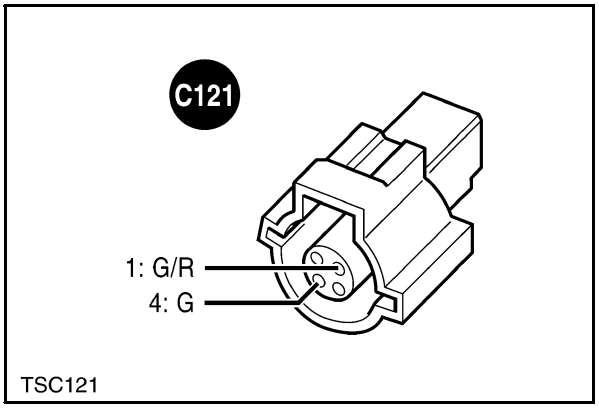

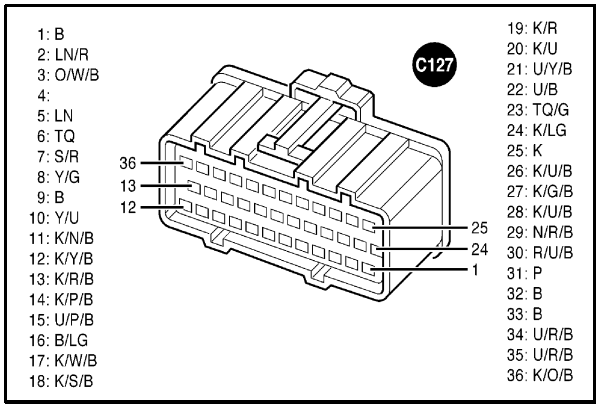

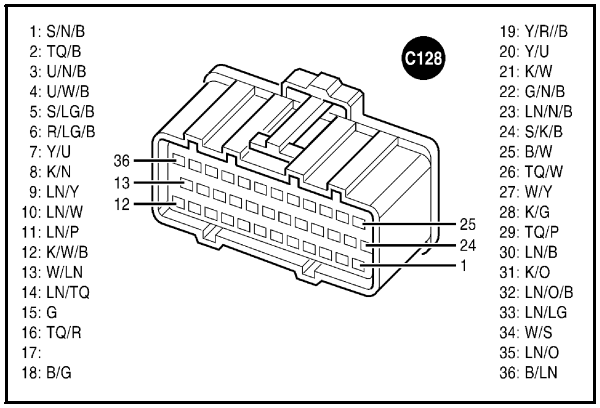

ERROR CODES 59 – Microprocessor reference voltage open circuit.

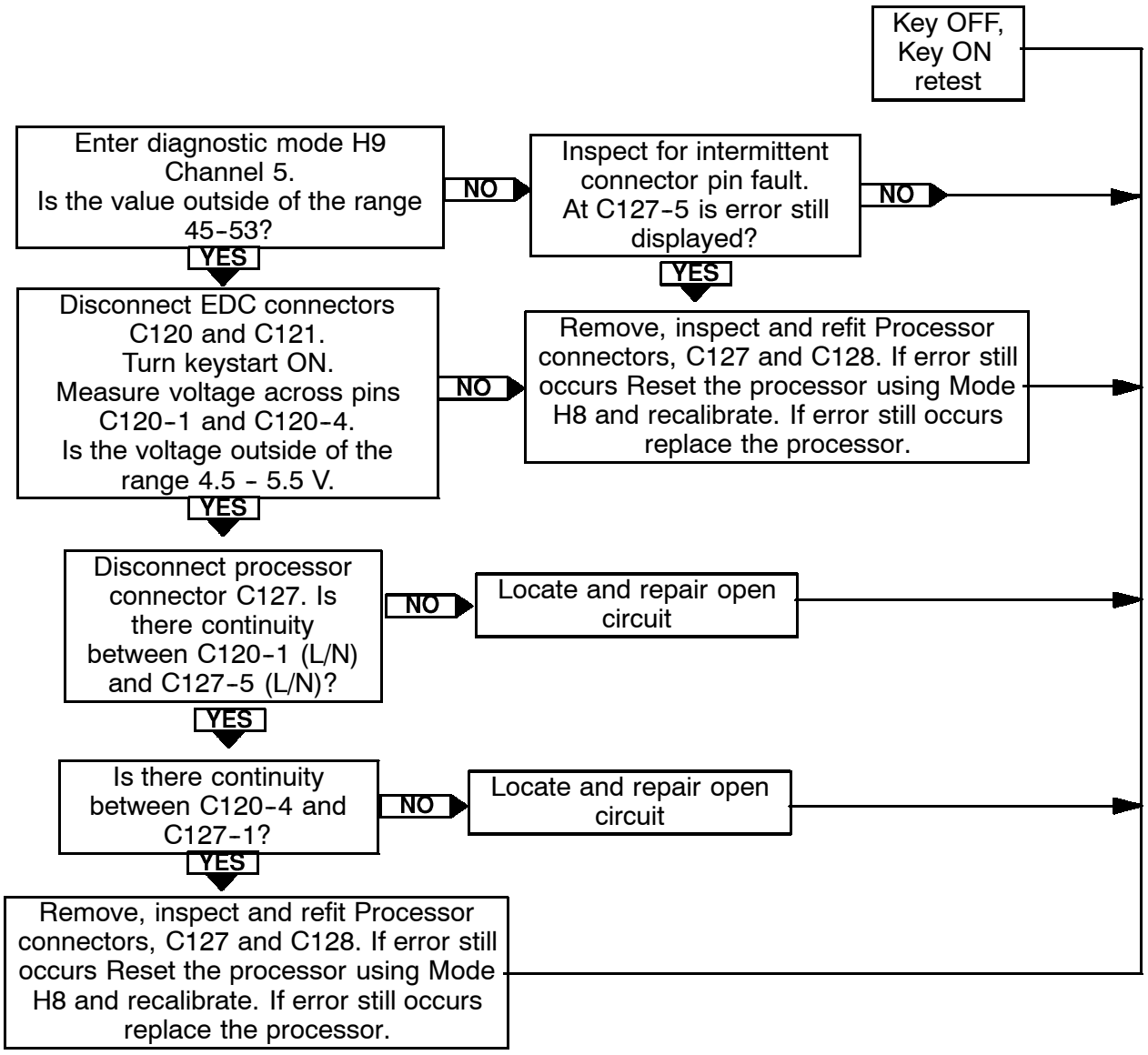

ERROR CODES 63 – EDC hydraulic valve lower solenoid Open Circuit
65 – EDC hydraulic valve lower solenoid Short Circuit

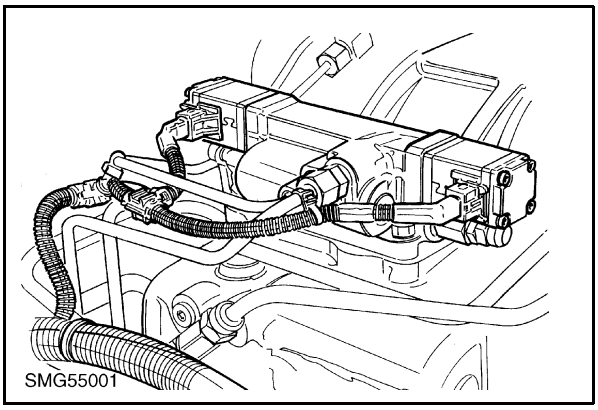

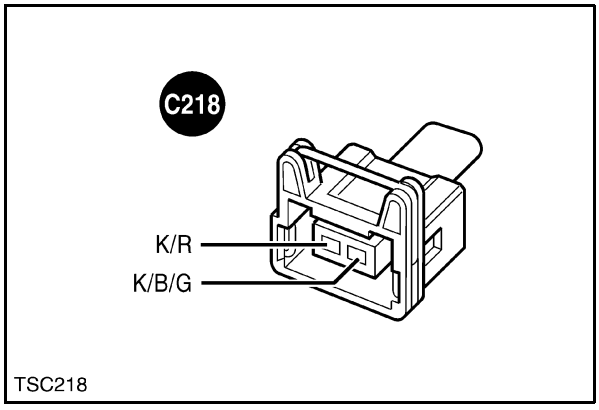

ERROR CODES 63 – EDC hydraulic valve lower solenoid Open Circuit
65 – EDC hydraulic valve lower solenoid Short Circuit

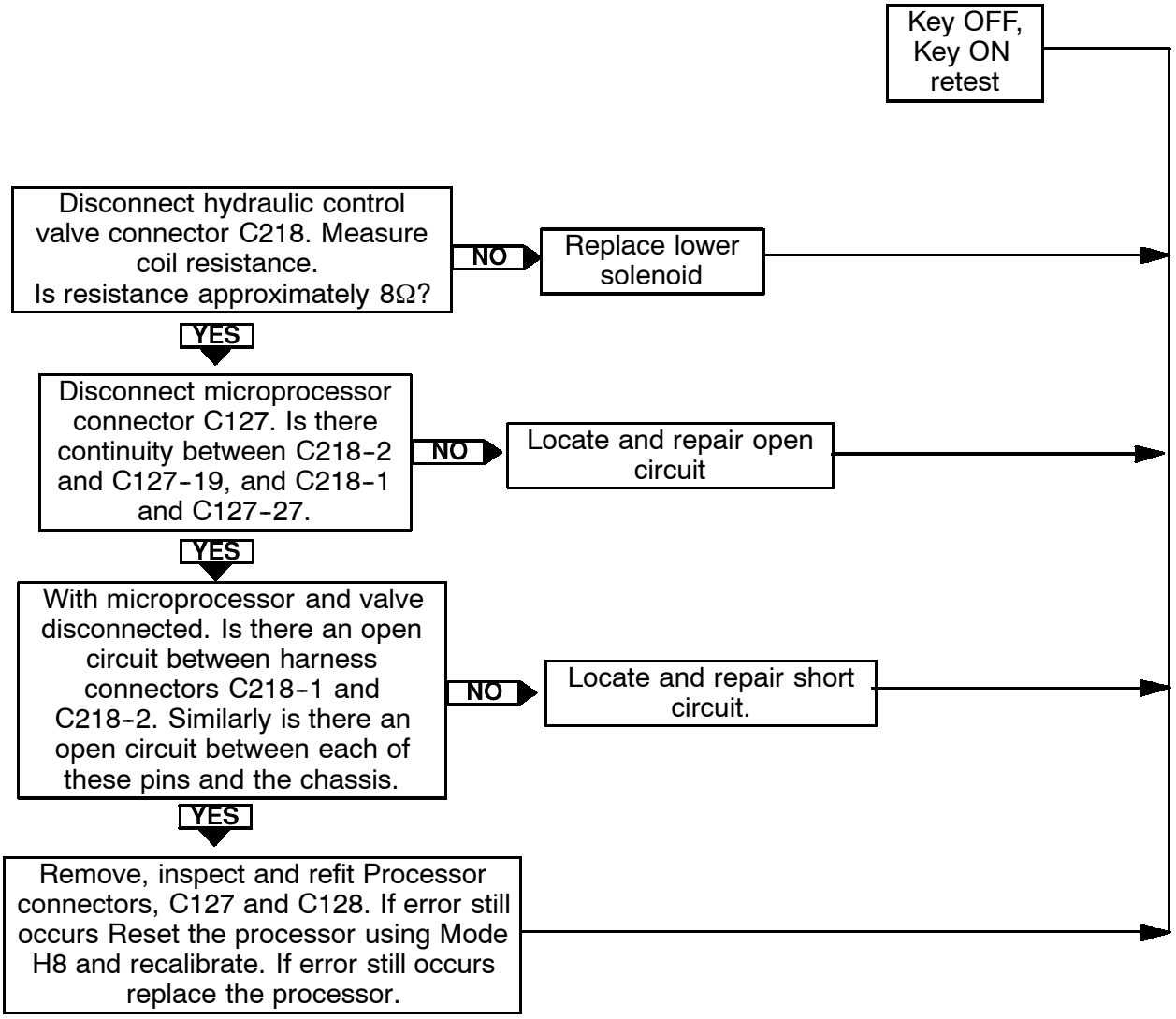

ERROR CODES 64 – EDC hydraulic valve Raise solenoid Open Circuit
66 – EDC hydraulic valve Raise solenoid Short Circuit

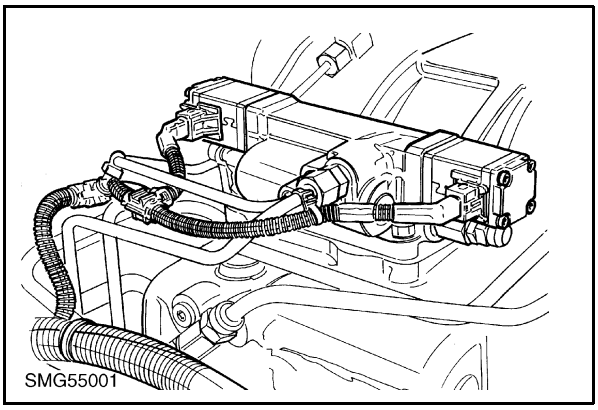

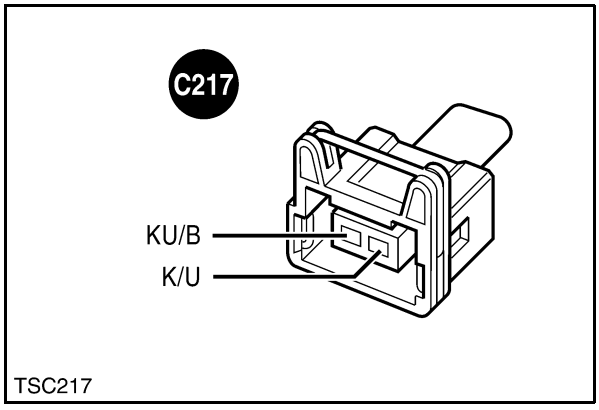

ERROR CODES 64 – EDC hydraulic valve Raise solenoid Open Circuit
66 – EDC hydraulic valve Raise solenoid Short Circuit

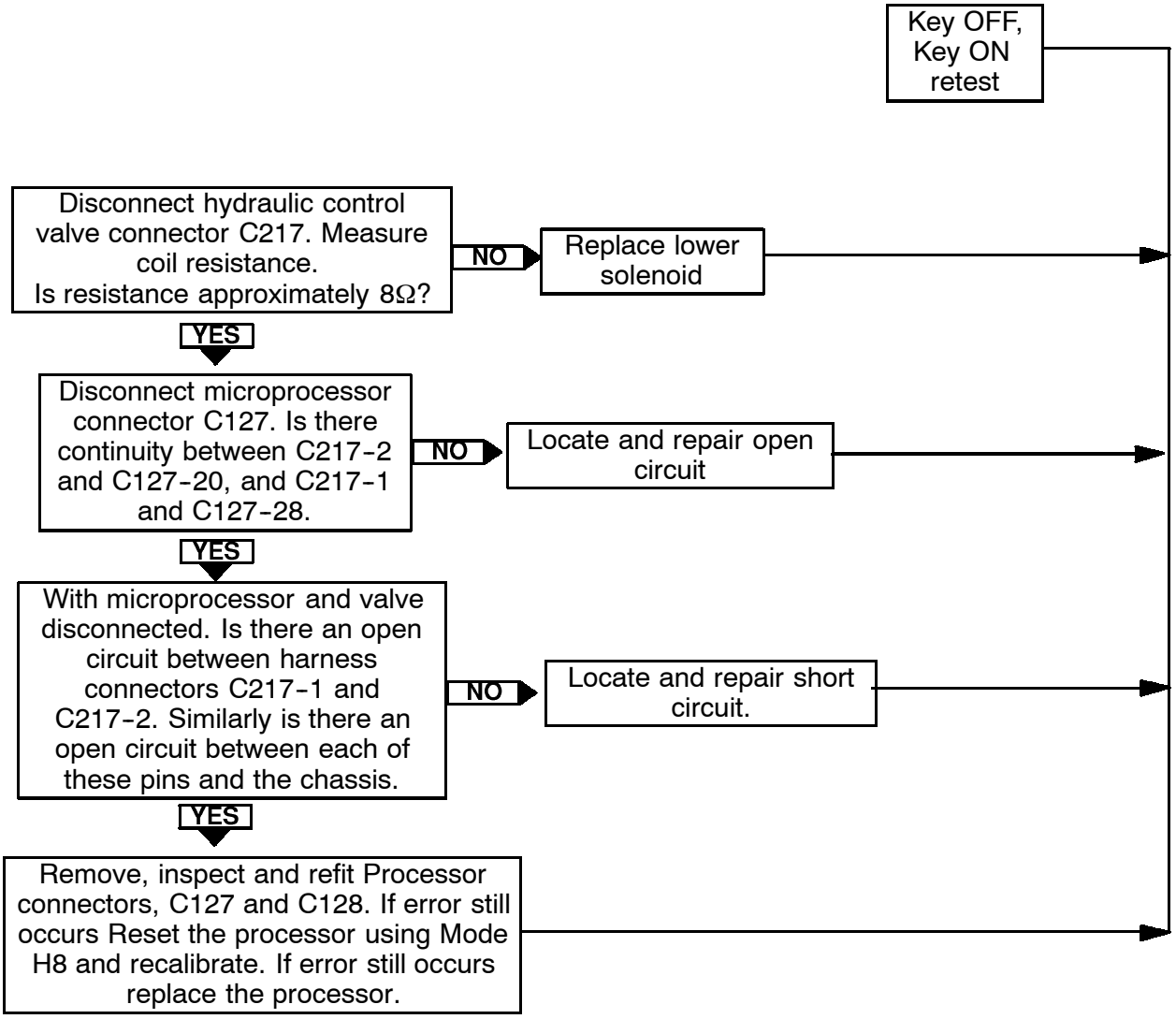

ERROR CODES 67 – EDC Hydraulic valve supply voltage too low

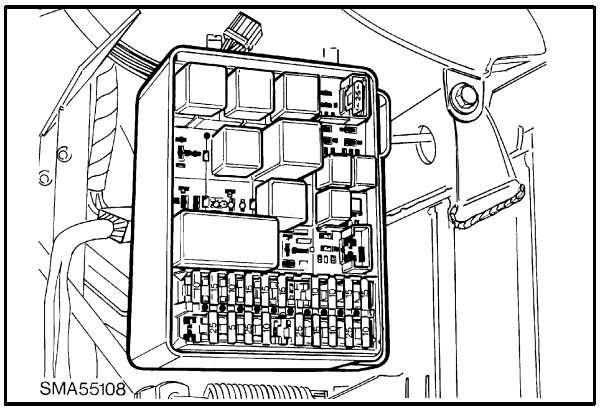

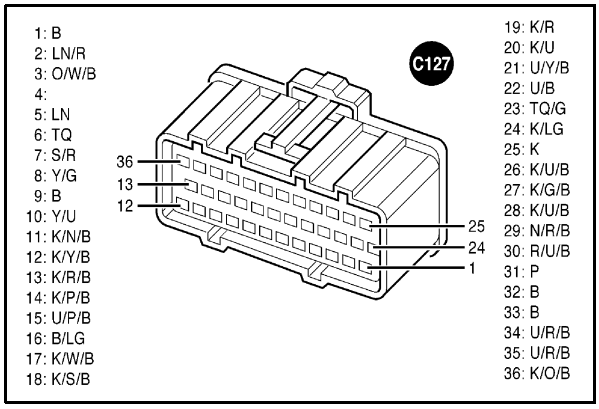

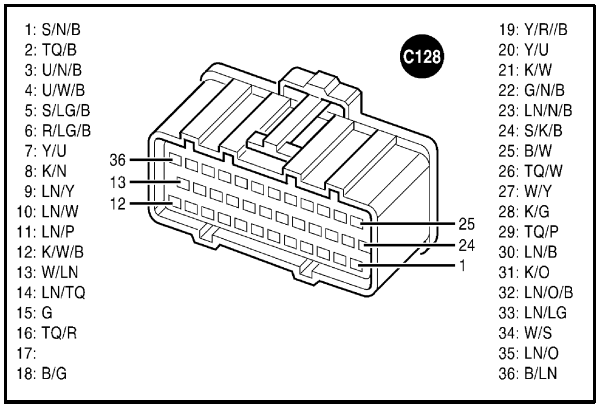

ERROR CODES 67 – EDC Hydraulic valve supply voltage too low

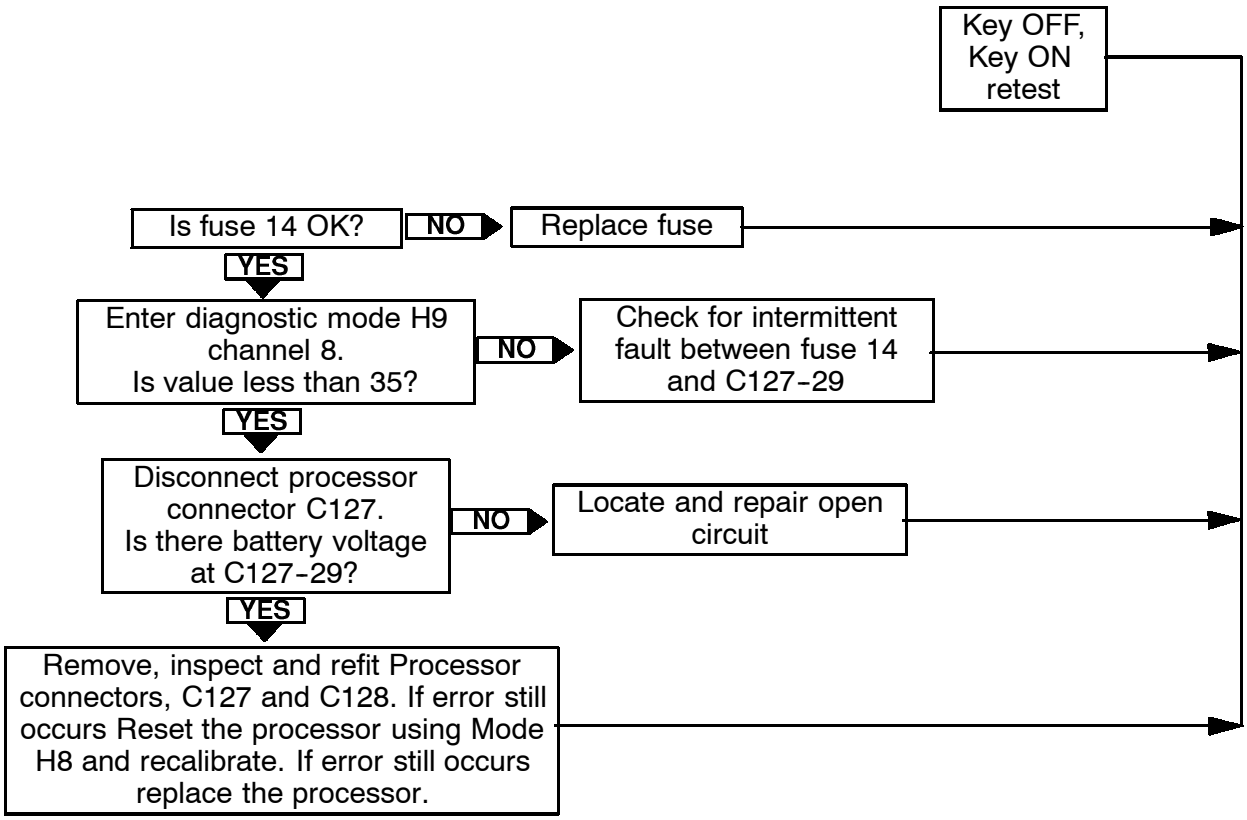

Fault Diagnostic Chart For Miscellaneous Hydraulic Lift Concerns

SYMPTON	POSSIBLE CAUSE	ACTION
Hydraulic lift will not operate.	No pilot pressure to EDC hydraulic control valve.	Perform low pressure circuit tests. Refer to Section 4
	No load sensing signal.	Tractors with CCLS Pump Check load sensing valve for sticking. Tractors with Open Centre Gear Pump Examine unload valve for sticking
	EDC load check valve sticking,	Examine load check valve.
Hydraulic lift will not lower.	Load check valve piston sticking.	Examine load check piston.
	Control valve spool sticking.	Examine spool.
	Lowering solenoid spool sticking.	Examine solenoid spool and torque of solenoid retaining screws.
	EDC Valve out of adjustment.	Examine spool adjusters for signs of tampering. Check valve calibration values using diagnostic routine H2.
Lift arms erratic, Slow or move when not in operation.	EDC valve receiving electronic signal.	Disconnect EDC valve connector and trace wiring fault if arms remain stationary.
	Pilot or control valve spools sticking.	Examine pilot and control valve spools for sticking or wear.
	EDC valve out of adjustment or incorrect valve fitted.	Examine spool adjusters for signs of tampering. Check valve calibration values using diagnostic routine H3 Check correct EDC valve fitted
Lift arms slowly drop when held in raised position with engine Off.	Check valve leaking.	Examine check valve poppet ball seat for wear.
	Lift Cylinder safety valve leaking	Examine safety valve
Cannot lift heavy loads.	Pump worn or lift cylinder seals leaking.	Perform hydraulic pump flow and pressure tests. Refer to 3
	Unload valve sticking (Open centre hydraulics only)	
Hydraulic lift will not raise or lower to maximum limits of travel.	Microprocessor incorrectly calibrated.	Perform memory reset and autocalibration procedure. See Error Code 24.

HYDRAULIC CONTROL VALVE - OVERHAUL

REMOVAL

NOTE: *The following procedure describes the removal of both the hydraulic control valve and manifold. It is not necessary to remove the manifold from the tractor if only the valve is being serviced.*

5. Fully lower hydraulic lift arms
6. Disconnect electrical connector to control valve.
7. Disconnect pilot (1), load sensing (5), system pressure inlet (3) and hydraulic lift feed (4) tubes at control valve (2), Figure 386.

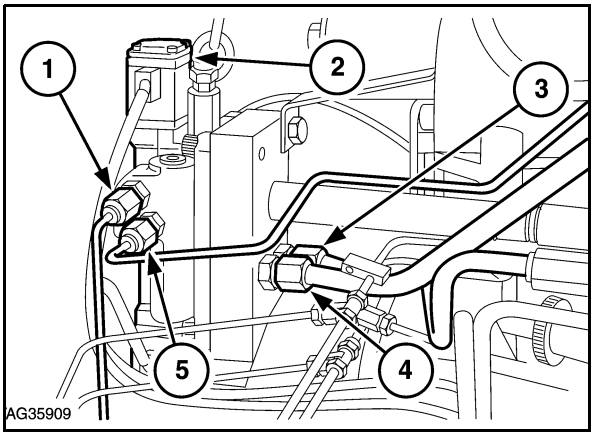

386

8. Remove valve bracket retaining bolt (1) and pull valve and manifold (2) from tractor, Figure 387.
9. Separate control valve from manifold, Figure 388, and note the location of all 'O' ring seals.

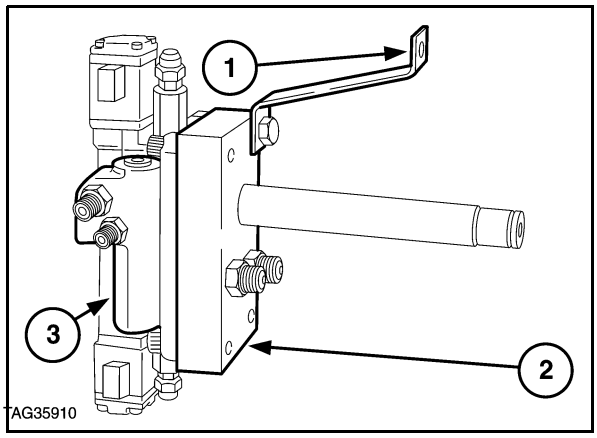

387

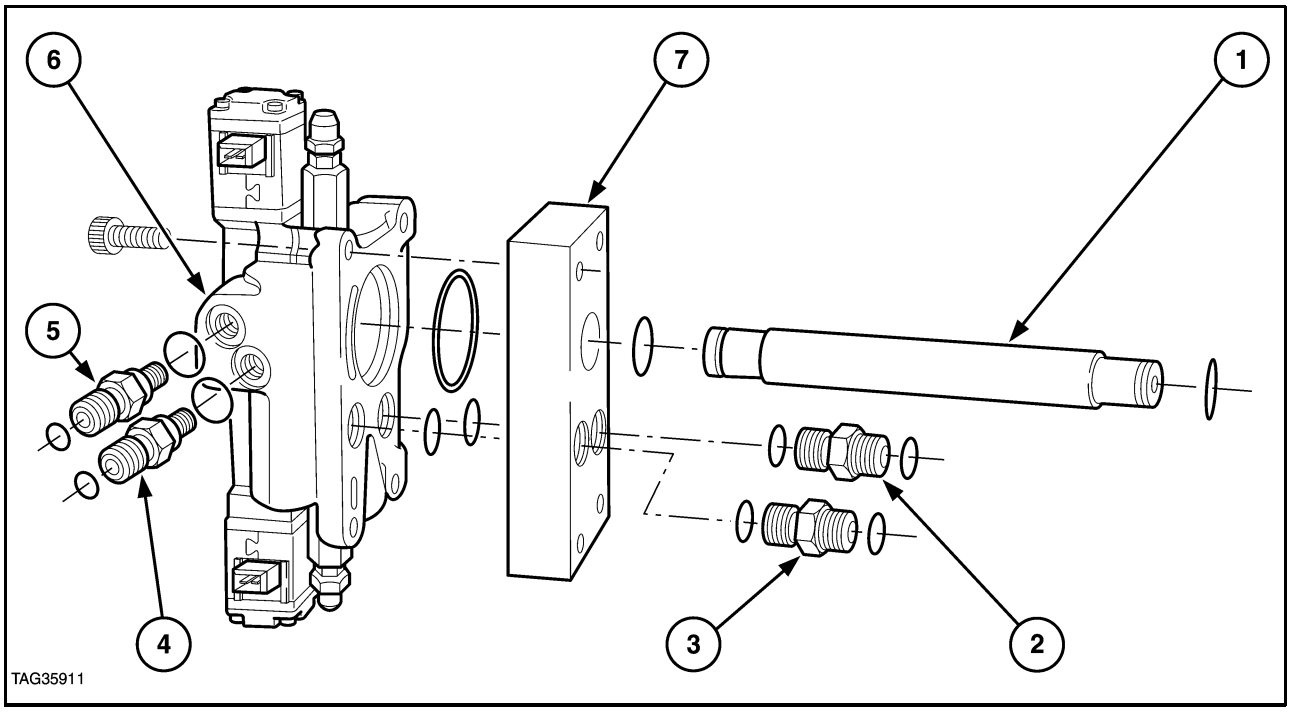

Hydraulic Control Valve and Manifold

388

1. Return to Reservoir Tube
2. Connector
3. Connector
4. Connector
5. Connector
6. Control Valve
7. Manifold

DISASSEMBLY

Solenoids and Pilot Spools

1. Identify lower (1) and raise (2) solenoids, to aid re-assembly, Figure 389.

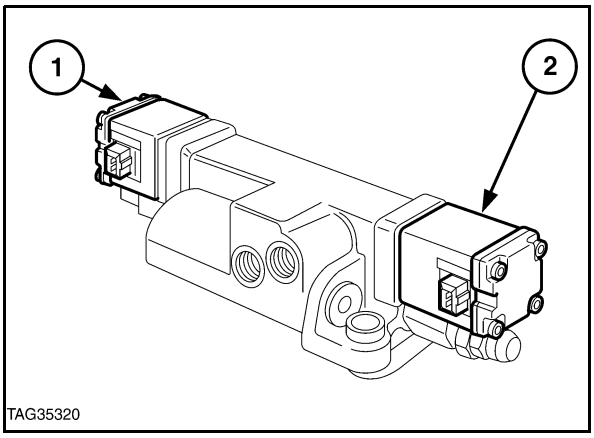

389

2. Remove solenoids from valve.

3. Separate solenoid components, Figure 390.

Solenoid Components - Exploded View

1. Allen Screws
2. Piston
3. Core
4. Plunger
5. 'O' Ring
6. Plate
7. Field Coil
8. Body
9. Plate
10. 'O' Ring
11. End Cap

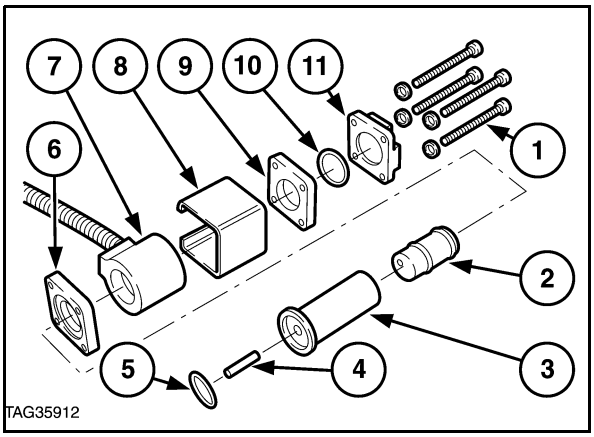

390

4. Remove pilot spool (1) and spring (2) from pilot operated valves, Figure 391.

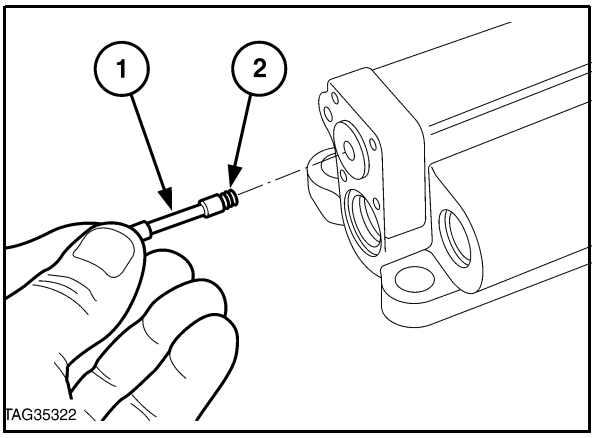

391

5. Insert a 5/16 in UNF bolt (2) into end of pilot spool (1). Pull pilot spool from housing, Figure 392.

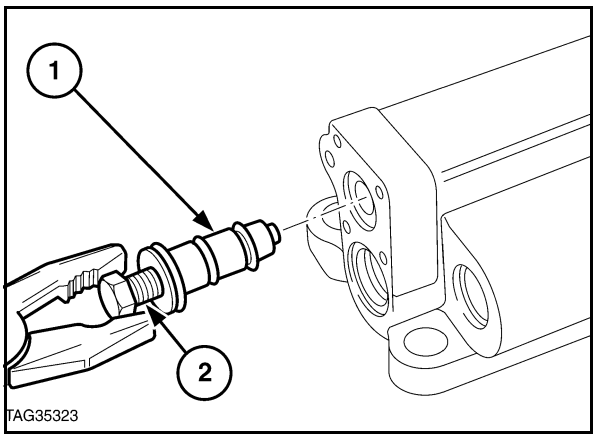

392

Main Spool

1. Using a suitable marker identify the right and left hand adjusters in relation to the valve housing body.

IMPORTANT: *Do not disassemble or reset the adjuster assemblies. The hydraulic control valve adjustment is pre-set at the factory and ensures that the spool is correctly set for the neutral position.*

2. Remove adjuster assemblies and withdraw spool centering springs and seats, Figure 393. Ensure that springs and seats remain matched with each adjuster.

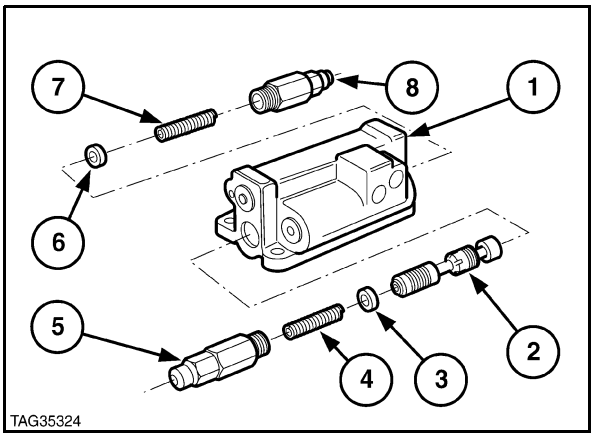

Main Spool 393

1. Valve Housing
2. Spool
3. Seat
4. Spring
5. Adjuster Assembly
6. Seat
7. Spring
8. Adjuster Assembly

Load Check Valve

1. Remove the load check valve plugs and withdraw the load check valve components, Figure 394.

NOTE: *The pin, item 7, is rounded on one end. When re-assembling the valve ensure the rounded end of the pin is inserted into the poppet, item 2.*

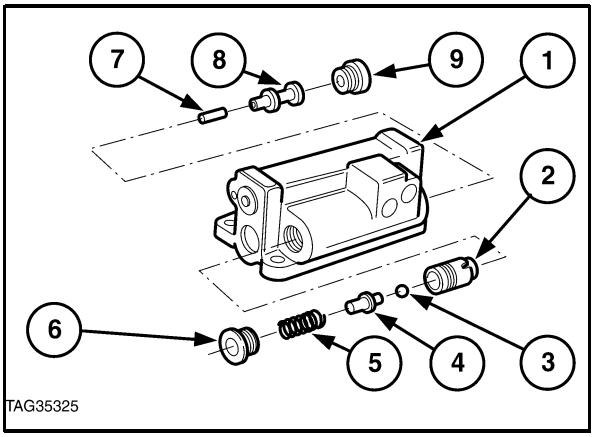

Load Check Valve 394

1. Valve Housing
2. Poppet
3. Ball
4. Guide
5. Spring
6. Plug and 'O' Ring
7. Pin
8. Piston
9. Plug and 'O' Ring

INSPECTION

1. Wash all parts, except solenoids, in a suitable solvent and dry with compressed air.

2. Inspect the valve housing, bores and spools for evidence of scoring or damage, paying particular attention to the condition of the highly finished surfaces in the spool and sleeve bores. If deep scores or serious pitting is observed discard the valve. Remove minor blemishes from the spools or sleeves with fine abrasive.

3. Ensure the spools move freely in their bores.

4. Discard all 'O' ring seals.

RE-ASSEMBLY and INSTALLATION

Re-assembly follows the disassembly procedure in reverse. During re-assembly observe the following:-

- Lubricate the spools with hydraulic oil.
- Install new 'O' ring seals.
- Tighten all plugs and locknuts to the correct torque. See Specifications.
- When installing the solenoids, tighten the retaining screws gradually in a cross corner sequence to a torque of 15 lbf.in (1.7 Nm). **Do Not** over torque the screws.
- Ensure 'O' ring seals (1) and (2) are correctly located around oil galleries on mounting face of hydraulic control valve before installing the valve onto the hydraulic lift cover, Figure 395.

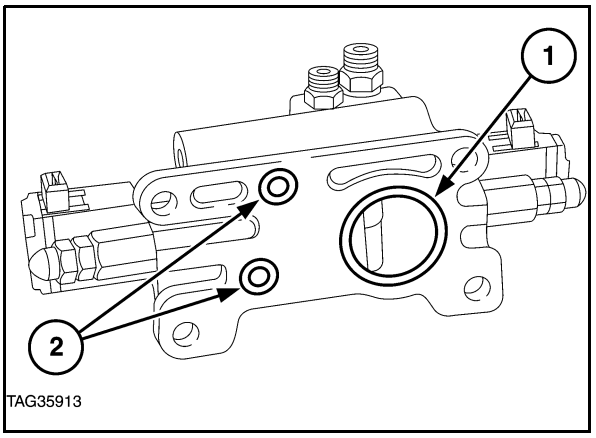

395

PRIORITY/UNLOAD VALVE ASSEMBLY - OVERHAUL

REMOVAL

1. Fully lower hydraulic lift arms

2. Less Cab Tractors:
   Remove seat to gain access to unload valve.

3. Remove panel in cab/platform floor to gain access to priority/unload valve assembly.

4. Thoroughly clean area around valve prior to proceeding with removal procedure.

5. Disconnect hydraulic connections to valve: (1) Remote valve feed, (2) remote valve pilot line, (3) supply from auxiliary pump, (4) supply from control valve to hydraulic lift, (5) load sense line.

NOTE: *Be careful that check valve spring and ball is not ejected when disconnecting the remote valve supply tube.*

6. Remove retaining bolts and lift valve assembly from lift cover.

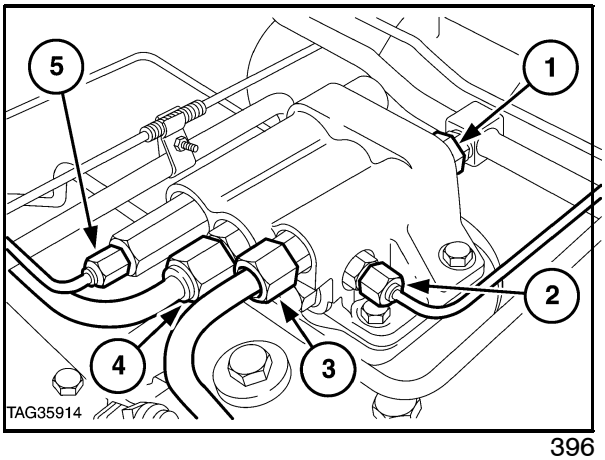

396

DISASSEMBLY

NOTE: *The connectors are installed against spring pressure and must be removed with care.*

Disassembly with reference to Figure 397 and Figure 398.

Auxiliary Pump Check Valve

1. Ball
2. Spring
3. Check Valve Stop

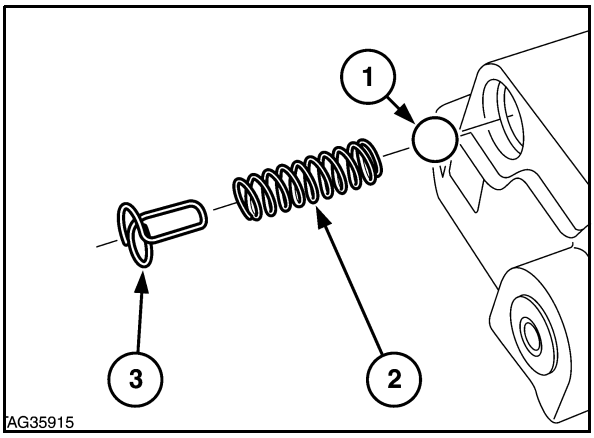

397

Priority/Unload Valve Assembly

1. Housing
2. Combining/Unload Valve
3. Filter
4. Spring – Unloaded Length 73.4 mm (2.89 in)
5. Plug
6. Connector
7. Spring – Unloaded Length 137 mm (5.39 in)
8. Priority/Unload Valve

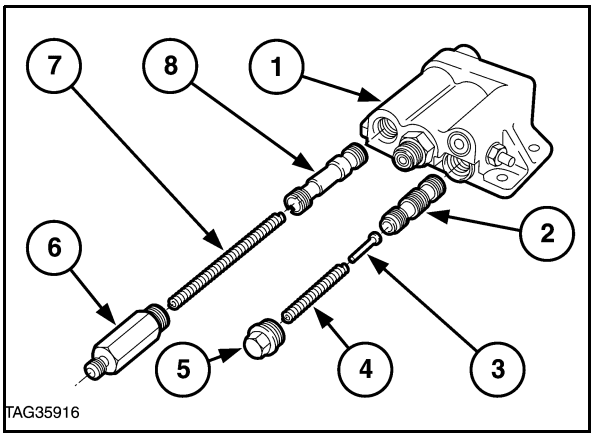

398

INSPECTION AND REPAIR

1. Wash all components in a suitable cleaning agent such as paraffin (kerosene), mineral spirits or a commercial cleaning agent.

2. Examine all valves and bores for burrs and scratches. Any minor burrs or scratches may be removed with a fine abrasive.

3. Ensure valves move freely in their bores. Heavy scoring or bores will necessitate installation of a new priority/unload valve assembly.

4. Inspect the orifice in the end of the priority/unload valve connector (1), Figure 399.

   This connector receives the signal from the electronic draft control valve load sensing line and if blocked will prevent operation of the valve resulting in a no/slow hydraulic lift.

5. Ensure the valve springs are not broken or damaged.

6. Renew all ‘O’ ring seals.

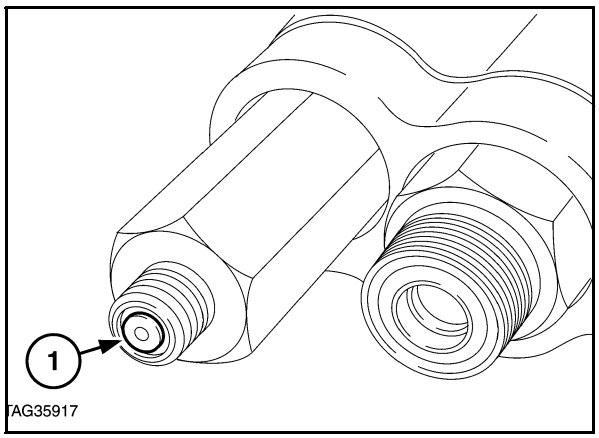

399

RE-ASSEMBLY

1. Lubricate all components with hydraulic oil.

2. Replace all 'O' ring seals.

3. Ensure the seals in the priority/unload valve housing are not dislodged during installation onto the tractor (1) and (2), Figure 400.

4. Tighten the valve to top cover mounting bolts to a torque of 42-56 lbf ft (74-46 Nm).

5. Securely tighten all connections.

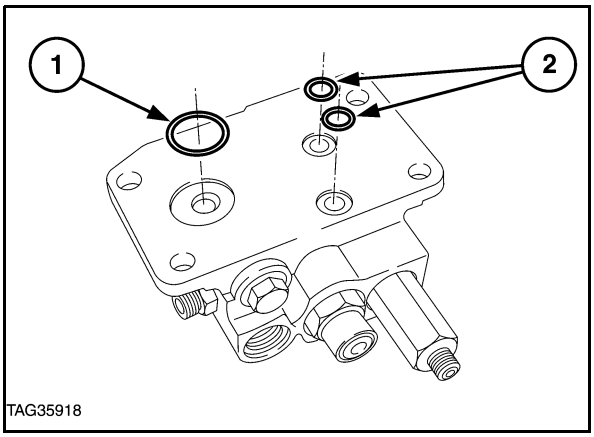

400

HYDRAULIC LIFT COVER ASSEMBLY - OVERHAUL

REMOVAL

1. Lower lift arms.

2. Less Cab Tractors Only:
   Remove platform to gain access to hydraulic cover.

3. Where fitted turn auxiliary services control knob to engaged position and disconnect linkage at lift cover (3).

4. Disconnect hydraulic connections to assist rams (where fitted) and disconnect rams (5) from lift arms, Figure 402.

5. Disconnect lift rods (2) (3) and (4) from lift arms.

6. Remove remote control valves (1).

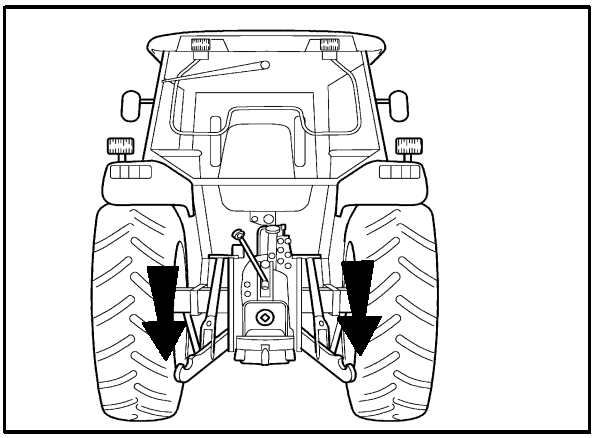

401

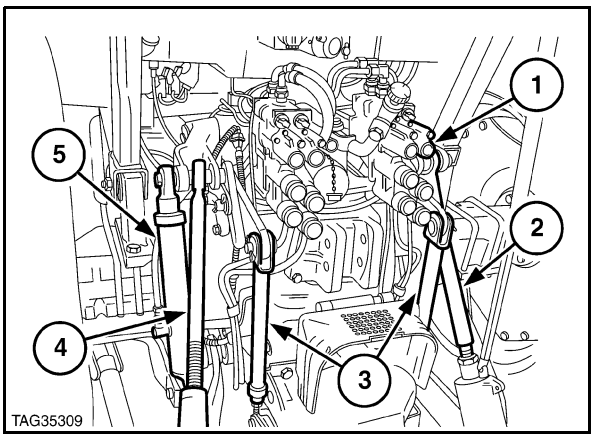

402

7. Remove hydraulic control valve (2), Figure 403, as previously described in “Control Valve Overhaul”.

8. Remove feed tube from hydraulic top cover to control valve (1).

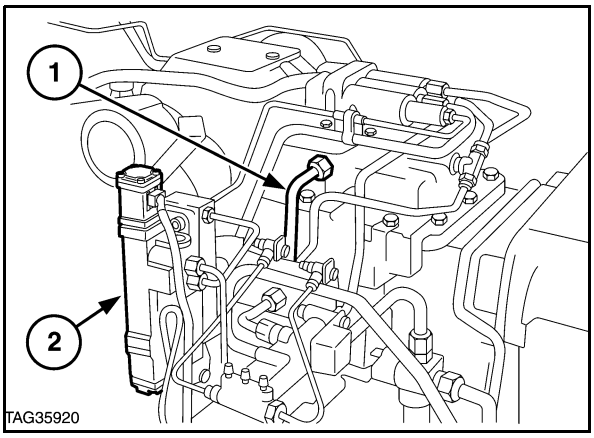

403

9. Disconnect and remove lift arm position sensing potentiometer (1), Figure 404.

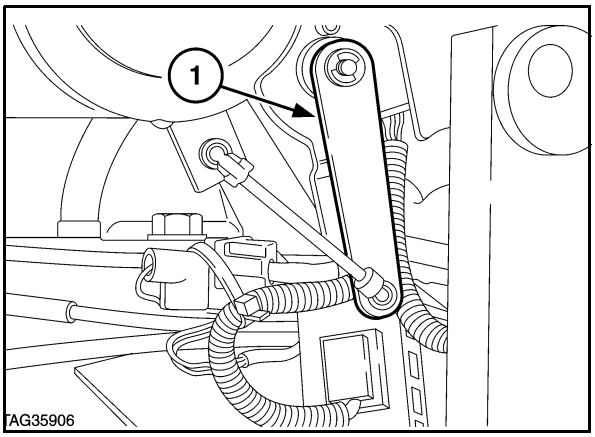

404

10. Disconnect tube connections at priority/unload valve assembly and remove tubes from tractor.

1. Remote Valve Feed Tube
2. Remote Valve Pilot Line
3. Supply from Auxiliary Pump
4. Supply from Hydraulic Control Valve to Hydraulic Lift
5. Load Sense Line from Hydraulic Control Valve

NOTE: *Be careful that check valve spring and ball is not ejected when disconnecting the remote valve supply tube.*

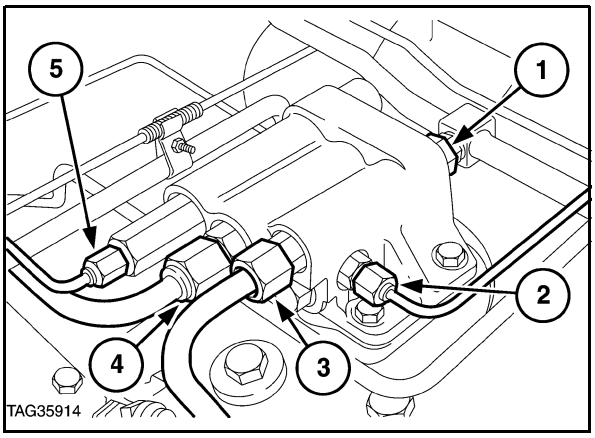

405

11. Remove trainer brake coupler and feed tube.

12. Remove assist ram feed tube.

13. Remove priority/unload valve assembly.

14. If the hydraulic lift assembly is being removed in order to overhaul the lift cylinder, it is recommended that the cylinder retaining bolts are **loosened** before removing the lift assembly from the tractor. **Do Not** remove these bolts.

15. Using suitable lifting gear remove lift cover, Figure 406.

NOTE: *For clarity, illustration shows lift cover removal with platform removed. The cover can however be removed with the cab in situ. When removing the cover, with cab in situ, the lifting gear should be positioned beneath the lift arms taking care not to damage the small bracket on the right hand arm.*

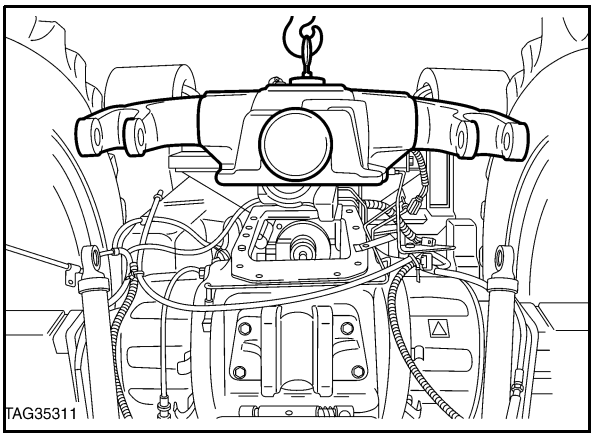

406

DISASSEMBLY

1. Where fitted pull ASC valve to engaged position. Unscrew control linkage connector (3), pull knob (2) from lift cover and remove selector valve stem (1), Figure 407.

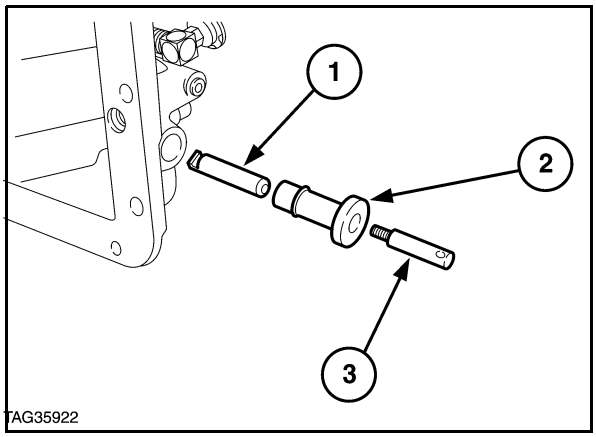

407

2. Remove four bolts (1) securing lift cylinder (2) to cover, Figure 408.

3. Move lift arms to raised position and carefully remove lift cylinder from locating dowels taking care not to damage the ASC valve spool.

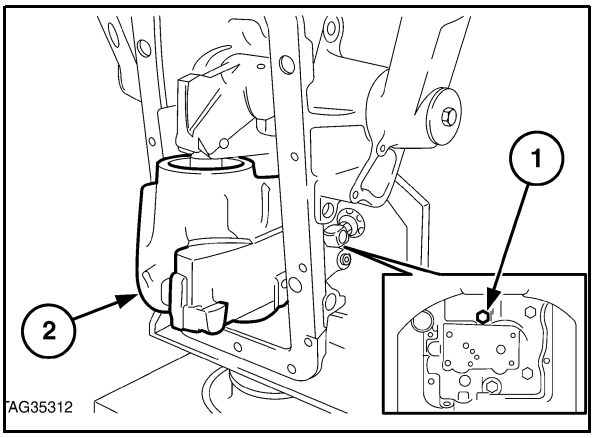

408

4. Remove priority/unload valve assembly return tube (1), Figure 409.

5. Remove lift cylinder safety valve and discard seal. Refer to Figure 410.

NOTE: *The lift cylinder safety valve is not serviceable.*

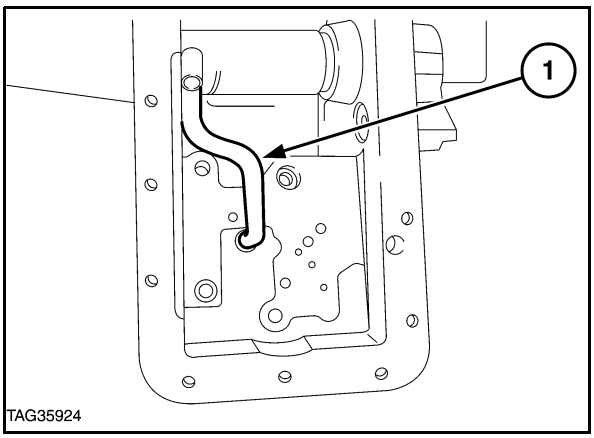

409

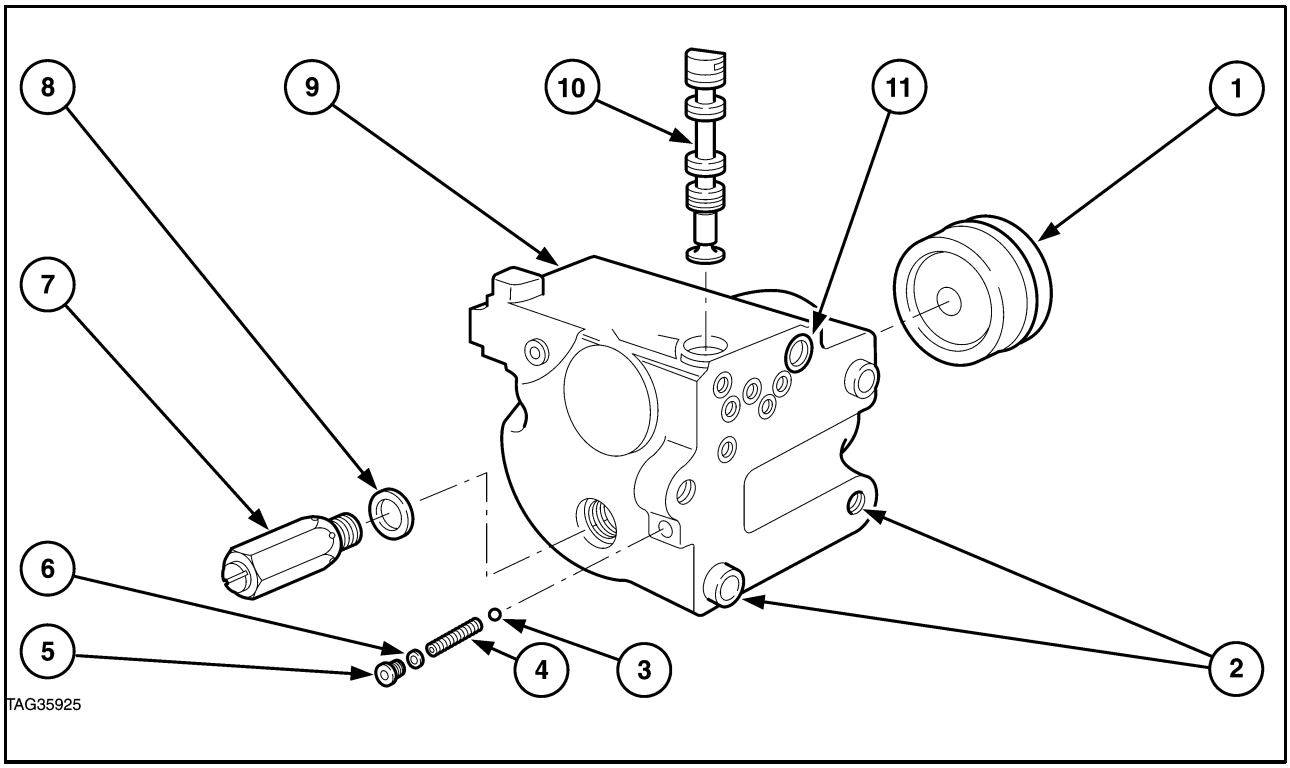

Hydraulic Lift Cylinder – Exploded View 410

1. Piston
2. Ring Dowels
3. Ball
4. Spring
5. Plug
6. 'O' Ring
7. Safety Valve
8. Seal
9. Lift Cylinder
10. ASC Valve Spool
11. 'O' Rings (7 off)

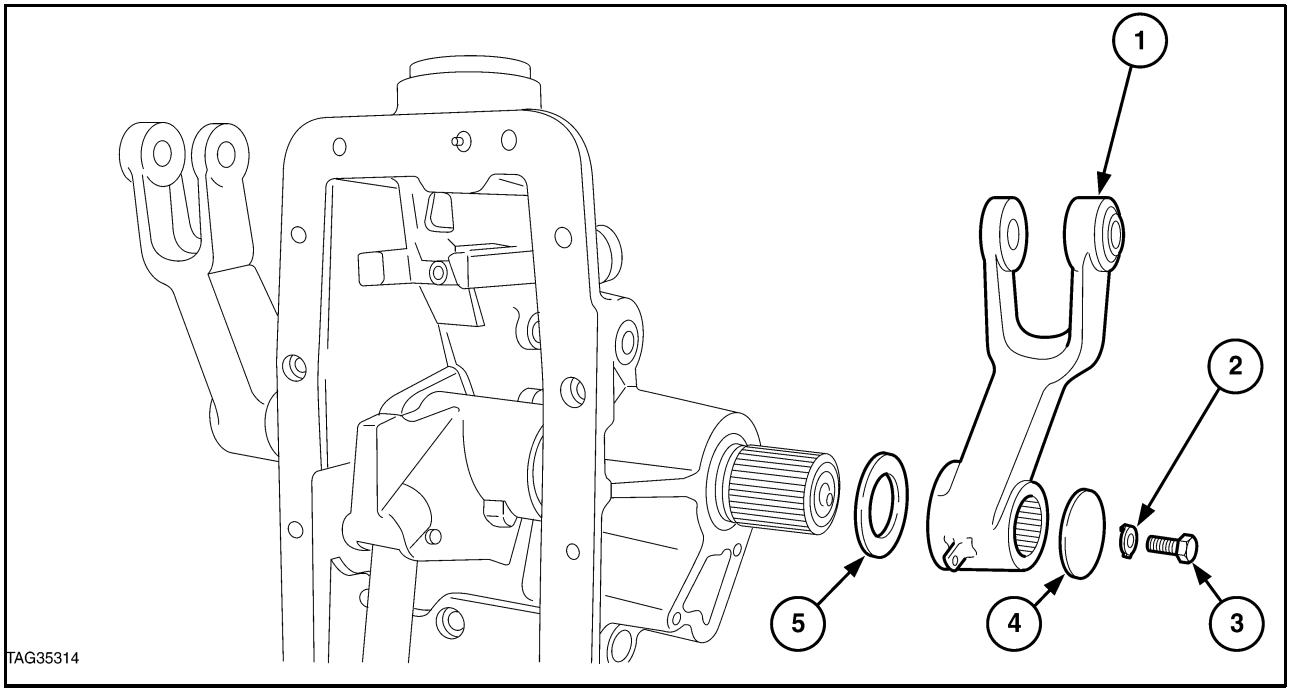

Lift Arm Assembly – Exploded View 411

1. Lift Arm
2. Locking Washer
3. Bolt
4. Washer
5. Washer

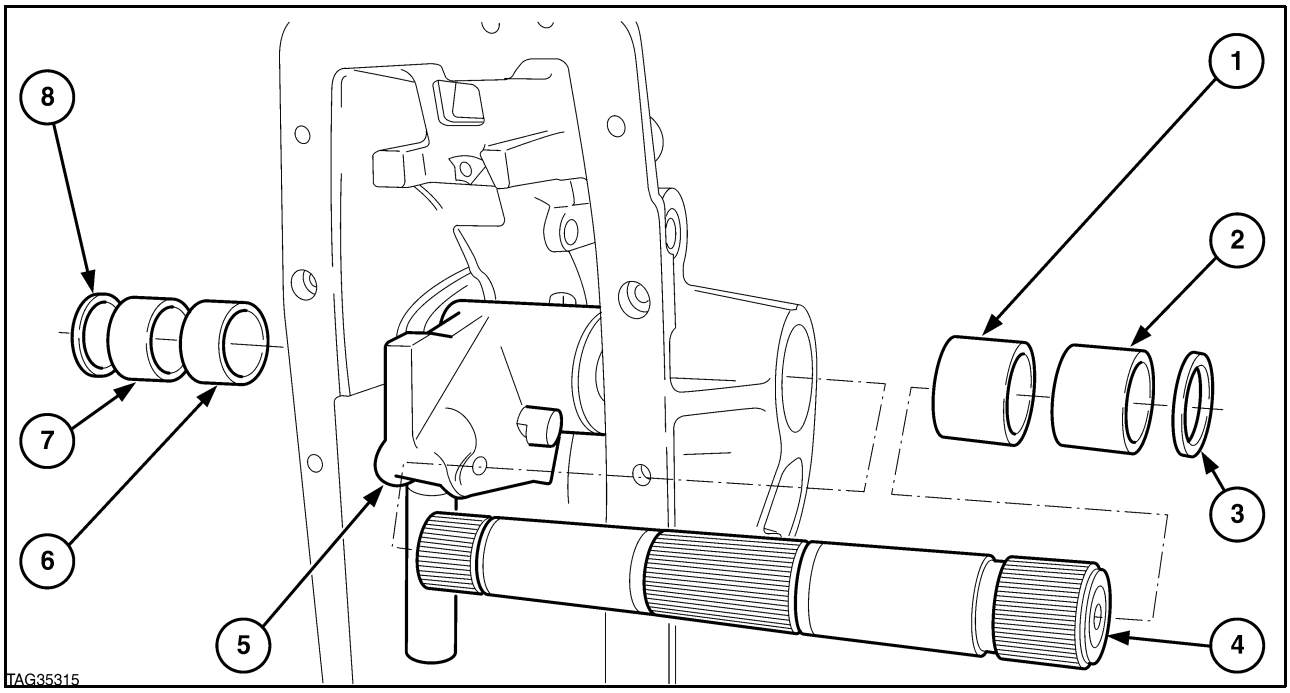

Cross Shaft and Arm Assembly – Exploded View 412

1. Bush
2. Bush
3. Seal
4. Cross Shaft
5. Piston Rod and Arm Assembly
6. Bush
7. Bush
8. Seal

6. Remove ASC valve detent plug ball and spring and withdraw valve spool.

7. Push a soft metal rod through safety valve bore and eject lift cylinder piston. Discard piston 'O' ring seal and back up ring.

8. Remove lift arms. Refer to Figure 411.

9. Remove ASC valve detent plug ball and spring.

10. Withdraw cross shaft assembly components. Refer to Figure 412.

11. If arm (1), piston rod (3) or retaining pins (1) and (4) are worn, separate rod and arm assembly. Refer to Figure 413. The pins are an interference fit into the arm. To remove pins use a suitable lever between rod and end face of pin.

12. Where necessary, remove remaining plugs from lift cover. Under normal circumstances the removal of these plugs is not necessary.

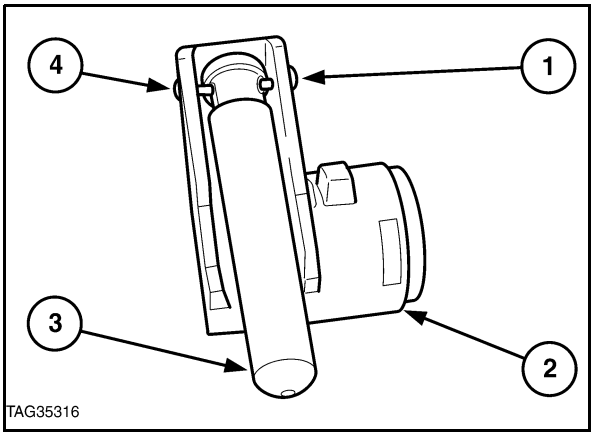

413

INSPECTION AND REPAIR

1. Wash all parts in suitable solvent and replace all 'O' ring seals.

2. Examine ASC valve and mating bore for wear, burrs or scratches. Minor damage to valve may be removed with fine abrasive. Ensure valve is thoroughly washed before re-assembly. Ensure valve moves freely in bore. Heavy scoring of bore necessitates replacement of lift cylinder.

3. Check oil passages are free from obstruction.

4. Where a new lift cylinder is required select largest ASC valve spool which when lightly lubricated, will operate in bore without binding when turned through 360° and operated over full length of stroke.

NOTE: *The ASC valve is colour coded only as a guide for matching the valve to the bore. To obtain an optimum fit a proprietary brand of metal polish may be used to lap a slightly oversize valve into the bore. Ensure all traces of polish are washed away and the components are dried prior to re-assembly. For control valve sizes refer to Specifications.*

RE-ASSEMBLY AND INSTALLATION

A master spline machined on the cross shaft ensures correct alignment of both the lift arms and piston arm during re-assembly.

Re-assembly and installation follows the disassembly procedure in reverse while observing the following requirements.

- Renew all 'O' rings and seals.
- Install piston 'O' ring seal (1) closest to closed end of piston and back-up seal (2) nearest open end of piston (3), Figure 414.

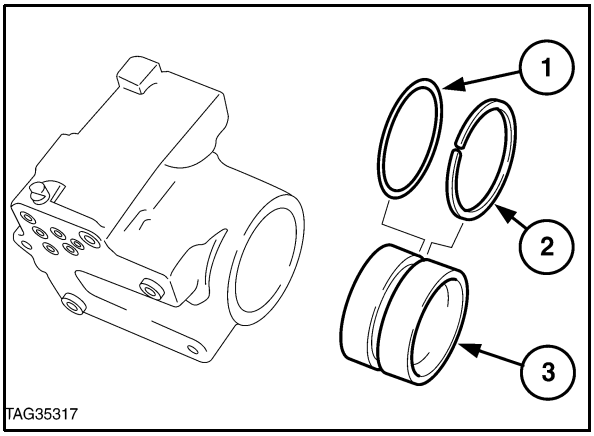

414

- To aid installation of piston into lift cylinder and prevent damage to the piston seals, a guide can be manufactured to the dimensions shown in Figure 415.

Piston Installation Guide

A. 4.126 inch (105 mm)
B. 5.25 inch (134 mm)
C. 0.12 inch (3 mm)
D. 1.62 inch (40 mm)
E. 6.0 inch (155 mm)

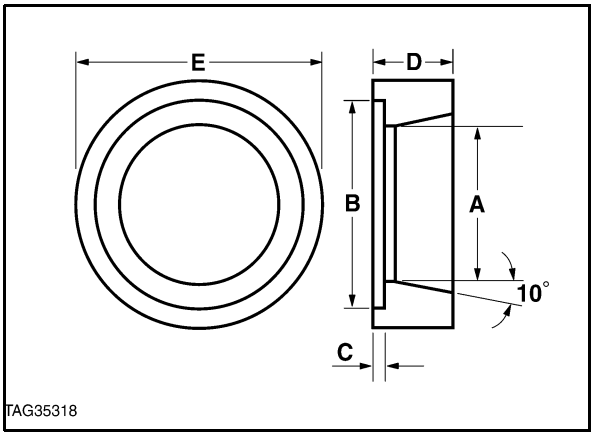

415

- Install piston (1) into cylinder (3) using guide (2) as shown in Figure 416. If a guide is not available and installation is difficult a piston ring compressor may be used to compress the seals.

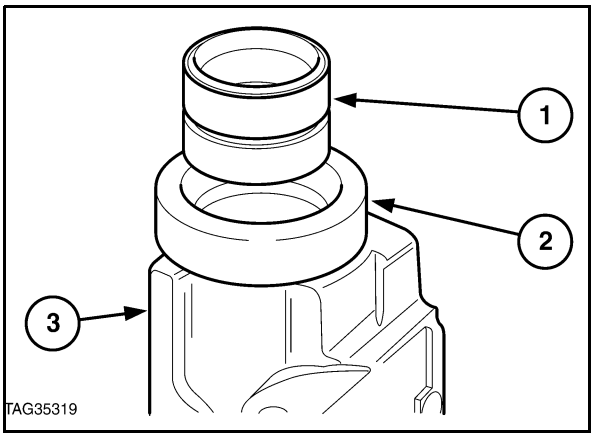

416

- Ensure the lift cylinder retaining bolts are installed in the correct locations and torque to 165-200 lbf ft (224-271 Nm), Figure 417.

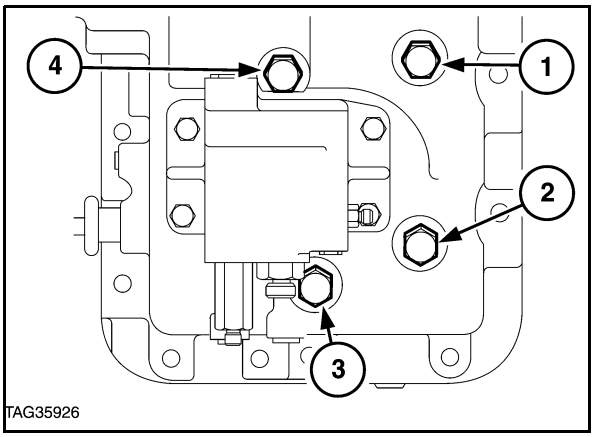

417

Lift Cylinder Retaining Bolt Locations
(Viewed from Top of Hydraulic Lift Cover)

1. 3 in (76 mm) Bolt
2. 2.5 in (64 mm) Bolt
3. 2.25 in (57 mm) Bolt
4. 3 in (76 mm) Bolt with Thin Bolt Head

- Prior to installation of the cross shaft coat the shaft and lip seals with grease.
- The following torque procedure must be observed when tightening the lift arm retaining bolts.
- Install the lift arms and tighten the left hand arm retaining bolt to a torque of 20-30 lbf ft (27-40 Nm). Lock the bolt in position with the tab washer. Refer to Figure 65.
- Raise both lift arms and tighten the right hand arm retaining bolt sufficiently to allow the arms to lower under their own weight. Lock the bolt in position with the tab washer. **Do Not** over tighten bolts as damage to the cross shaft seals and washers will occur.
- Prior to installation of the hydraulic top cover, apply a thin bead of New Holland gasket sealer, Part No. 82995770, to **BOTH** sides of the hydraulic top cover gasket. The bead should be continuous around the entire face of the gasket and to a thickness of approximately 1/32 in (1mm).

- Install lift cover onto the rear axle centre housing and tighten retaining bolts to a torque of 100–125 lbf ft (135–170 Nm).
- Manually raise lift arms (engine not running) and check that lift arms fall slowly under their own weight. If the arms do not fall recheck the torque applied to the lift arm retaining bolts.
- Continue to install the lift cover, linkage and cab/platform using the removal procedure in reverse.
- Tighten all retaining bolts to the correct torque and apply sealant to threads where specified. See Specifications.

INDEX

Assist rams 4-281
Description and operation 4-284
Overhaul 4-285
Specifications 4-281
Torques 4-283

Fixed displacement gear type pumps 4-209
Description and operation, engine mounted 4-220
Description and operation, transmission mounted 4-212
Overhaul, engine mounted 4-221
Overhaul, transmission 4-215
Pressure testing 4-224
Special tools 4-210
Specifications 4-209
Torques 4-211

Hydraulic circuit description 4-5

Hydraulic lift assembly with electrolink™ for tractors with variable displacement closed centre load sensing hydraulic pump 4-81
Description and operation 4-84
Error codes 4-99
Hydraulic control valve – overhaul 4-160
Hydraulic lift cover assembly – overhaul . 4-155
Specifications 4-82
Torques 4-83
Troubleshooting and calibrations 4-97

Hydraulic lift assembly with electronic draft control for tractors with fixed displacement hydraulic pump 4-287
Component description 4-292
Description and operation 4-289
Error codes 4-310
Hydraulic control valve – overhaul 4-365
Hydraulic lift cover assembly – overhaul . 4-370
Hydraulic operation and circuits 4-298
Priority/unload valve assembly – overhaul 4-368
Specifications 4-287
Torques 4-288
Troubleshooting and calibrations 4-308

Hydraulic lift assembly with top link sensing 4-163
Component overhaul 4-188
Description and operation 4-168
Fault finding 4-166
Hydraulic components and circuits 4-172
Hydraulic lift assembly – overhaul 4-190
Special tools 4-164
Specifications 4-163
Torques 4-165

Hydraulic pump assembly with variable displacement closed centre load sensing (CCLS) 4-22
Description and operation 4-33
Fault finding 4-26
Overhaul 4-52
Pressure testing 4-68
Special tools 4-23
Specifications 4-22
Torques 4-24

Hydraulic trailer brakes 4-233
Description and operation 4-234
Pressure testing 4-246
Special tools 4-234
Specifications 4-233
Trailer brake valve overhaul 4-242

Introduction 4-2

Low pressure hydraulic oil flow, 8 x 2 4-14

Low pressure hydraulic oil flow, 12 x 12 4-16

Low pressure hydraulic oil flow, 16 x 16 4-20

Low pressure hydraulic oil flow, 24 x 24 4-18

Low pressure, steering and lubrication hydraulic circuits 4-10

Remote control valves 4-247
Cable adjustment 4-278
Control valve housing 4-271
Couplers 4-270
Description and operation 4-248
Hydraulic circuits 4-258
Overhaul 4-271
Pressure testing 4-279
Remote valve coupler 4-276
Special tools 4-247
Specifications 4-247
Torques 4-247

SECTION 5
BRAKING AND STEERING SYSTEMS
CONTENTS

BRAKING SYSTEM 5-2

BRAKE SYSTEM COMPONENT OVERHAUL 5-7

STEERING 5-16

SYSTEM TESTING 5-22

INDEX 5-40

BRAKING SYSTEM

SPECIFICATIONS, TIGHTENING TORQUES AND SPECIAL TOOLS

SPECIFICATIONS

Service Brake

Component \ Tractor Model	8×2 Models	12×12 and 16×16 models
Brake Type	Wet Brakes	Wet Brakes
Brake Operation	Mechanical + Ball ramp	Hydraulic + Ball ramp
Brake Discs (Per Side)	3	3/4*
Brake Disc Total Friction Area	2452.8 cm^2	2452.8 cm^2/ 3270.4 cm^2

* 3 per side on 30 kph models with single speed or 2 speed changeable PTO shaft.

Standard Secondary Brake – 12×12 and 16×16 Models

NOTE: *8×2 Models do not have a secondary brake system.*

Brake Type	Twin cable mechanically operated using actuator assemblies of service brake.

Optional Secondary Brake – 12×12 and 16×16 Models

Brake Type	Single cable, mechanically operated, dry disc, transmission handbrake
Friction Area	195.1 cm^2 (30.24 in^2)
Brake Shaft Bearing Pre–Load: Using gauge , Tool No. T4062 Using a spring balance	 12–16 lb.in (1.4–1.7 Nm) 20–26 lb (9.1–11.8 Kg)
Bearing Retainer To Rear Axle Centre Housing Available Shims:	0.005 in (0.127 mm) & 0.020 in (0.508 mm)

Brake Hydraulics

Master Cylinder Push Rod to Plunger Clearance	0.6 mm (0.024 in) Minimum
Brake Fluid	Mineral brake oil

TIGHTENING TORQUES

Components	lbf. ft	Nm
Master Cylinder Retaining Bolts	17	23
Handbrake Adjuster Locknut	20	27
Handbrake Retaining Bolts	33	45
Transmission Handbrake Housing Retaining Bolts	49	66
Transmission Handbrake Cover Bolts	32	44
Transmission Handbrake Pinion Locknut	75	102
Brake Pedal and operating Lever Pinch Bolts	49	66

SPECIAL TOOLS

DESCRIPTION	V.L. CHURCHILL LTD TOOLS	NUDAY TOOLS	FNH
Step Plates	630S	9210	FNH09210
Drive Pinion Pre–Load Gauge	T.4062	(Pull Scale)	–
Internal/External Puller	943	9507	FNH09507
Slide Hammer	943S	9567	FNH09567
Pulling Attachments:			
Small	951	9190	FNH09190
Pullers:			
Medium	1002	9198	FNH09198
Large	1003	9516	FNH09516
Handbrake Pinion Locknut Wrenches	FT.2010	–	–
Bushing Kit	818	–	FNH09514

DESCRIPTION AND OPERATION

REAR BRAKE ASSEMBLIES

Wet disc type rear brake assemblies are located within each axle housing.

The brake actuation of tractors with 8 × 2/16 × 4 transmission is by mechanical means using a rod and linkage arrangement. 3 Brake friction discs, per side, are installed as standard.

12 × 12 and 16 × 16 tractors employ a hydraulically actuated braking system, which has 4 brake friction discs installed per side as standard with 3 per side on 30 kph models with single speed or 2 speed changeable PTO shaft.

The brake assembly consists of internally splined brake discs in each half axle housing which sandwich an actuator assembly and an intermediate disc.

The actuator assembly consists of two plates with ramped pockets into which are located steel balls. The discs are held together by springs and are connected to the actuating lever by two links.

The actuating lever is operated by linkage connected to the brake pedals on the 8 × 2 and 16 × 4 Model range and operated by a hydraulic cylinder mounted on the actuator assembly on 12 × 12 and 16 × 16 Models.

Upon operation of the brake pedals the actuating plates rotate relative to one another, which causes the steel balls to ride up the ramped pockets forcing the actuating discs apart. As the actuating discs move apart the brake discs are forced against the brake housing to effect a braking action on the intermediate shaft.

A common, compartmental, reservoir is used for both the hydraulic clutch and brake systems, this provides the hydraulic oil for the brake master cylinders.

The Master cylinders, one on each brake pedal, are push rod operated via suspended brake pedals. A bridging pipe between the two cylinders and a compensating ball and valve assembly in each master cylinder provides an automatic brake balance system which allows for some unequal brake disc wear or poorly adjusted brakes.

Handbrake Operation
(12 × 12 and 16 × 16 Models)

A handbrake lever located to the left of the drivers seat on either with or less cab models is connected, via two operating cables, to the brake control rods (footbrake adjustment assemblies) of each rear brake assembly. When the lever is operated the brake actuators, described previously, function in the same way as if the footbrakes were operated.

Park Brake Latch
(8 × 2 and 16 × 4 Models Only)

A park brake latch is provided on 8 × 2 and 16 × 4 model tractors. This consists of a ratchet assembly on the left hand brake pedal and a pull rod located to the right hand side of the transmission. To operate the latch, lock the footbrakes together, pull up the latch (1) and rotate a quarter of a turn. When the footbrakes are applied they will lock in the applied position. To disengage rotate the latch a quarter of a turn and release and momentarily depress the footbrakes to disengage the ratchet

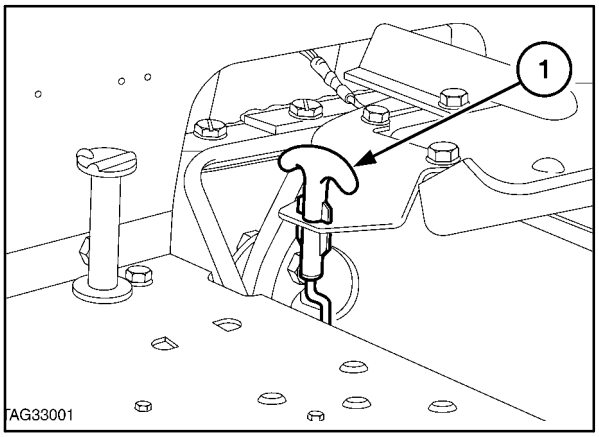

1

Transmission Handbrake
(Optional 12 × 12 and 16 × 16 Models)

A transmission handbrake is available in certain markets where legislation demands an entirely separate handbrake. A brake housing consisting of two dry friction discs and an actuator assembly is located on the left hand side of the rear axle centre housing. An actuating cable connects the operating lever to the housing.

A bevel gear is splined onto the main rear axle drive pinion shaft to mesh with a driven gear mounted on the inner end of the handbrake pinion shaft. When the operating lever is lifted to the 'ON' position, the actuator forces the friction discs against the brake housing, effecting a braking action on the brake shaft, locking the main rear axle drive pinion.

FOUR WHEEL BRAKING

Four wheel braking is available on 12 × 12 and 16 × 16 models with front wheel drive.

There are two systems. On 12 × 12 models (less dual command and Electronic Draft Control) i.e. no 'Processor' unit, the four wheel braking is activated directly from the brake switches, i.e. , both pedals depressed cuts the power to the FWD Solenoid which allows the FWD to engage and provide four wheel braking.

The second system, on 12 × 12 and 16 × 16 models utilising a processor unit, uses the processor to engage/disengage the four wheel braking. The brake switches send a signal to the processor which then controls the signal to the FWD solenoid, taking into account wheel speed. The four wheel braking will operate at speeds above 8.5 km/h (4 mph) but will not function below this speed.

NOTE: *To avoid possible serious mechanical damage to the dog teeth of the four wheel drive unit, it is important that the brake switches are correctly adjusted to ensure that the front wheel drive becomes engaged before the rear brake assemblies start operating.*

TROUBLE SHOOTING

TROUBLE SHOOTING

PROBLEM	POSSIBLE CAUSES	REMEDY
Excessive Pedal Travel	Brakes Require Adjustment	Adjust Brakes
Pedal Feels 'Spongy'	Air in System	Bleed Brakes
Reservoir Oil Requires Regular Topping Up	Leak In System	Check Tube Connections and Tube Condition. Check Master Cylinder Push Rod End For fluid Weepage. Check Slave Cylinders.
Unequal Braking	Brakes Badly Out of Adjustment	Adjust Brakes
	Air in one side of System Only One Brake Operating	Bleed System Jack up Tractor , Check brake Operation, Inspect adjusted Linkage.
	Slave Cylinder Seized.	Inspect Tubes and Connections.
	Sudden Loss of Fluid From One Side.	Inspect Brake Actuators and Brake Plates.

BRAKE SYSTEM COMPONENT OVERHAUL

MASTER CYLINDER – Removal

1. Remove the instrument console right hand side cover.
2. Disconnect hose from reservoir (1). Plug to prevent excessive fluid loss.
3. Disconnect outlet tubes (2) and plug.
4. Disconnect the push rods from the brake pedals (4).
5. Remove the four bolts (3) securing the cylinder assemblies to the tractor bulkhead and withdraw cylinders.
6. Installation is the reversal of the removal procedure.

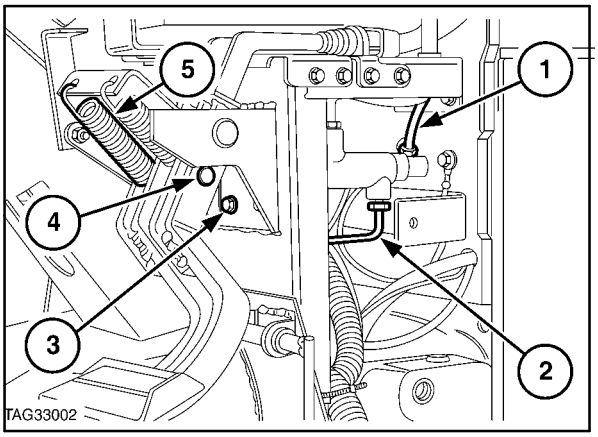

2

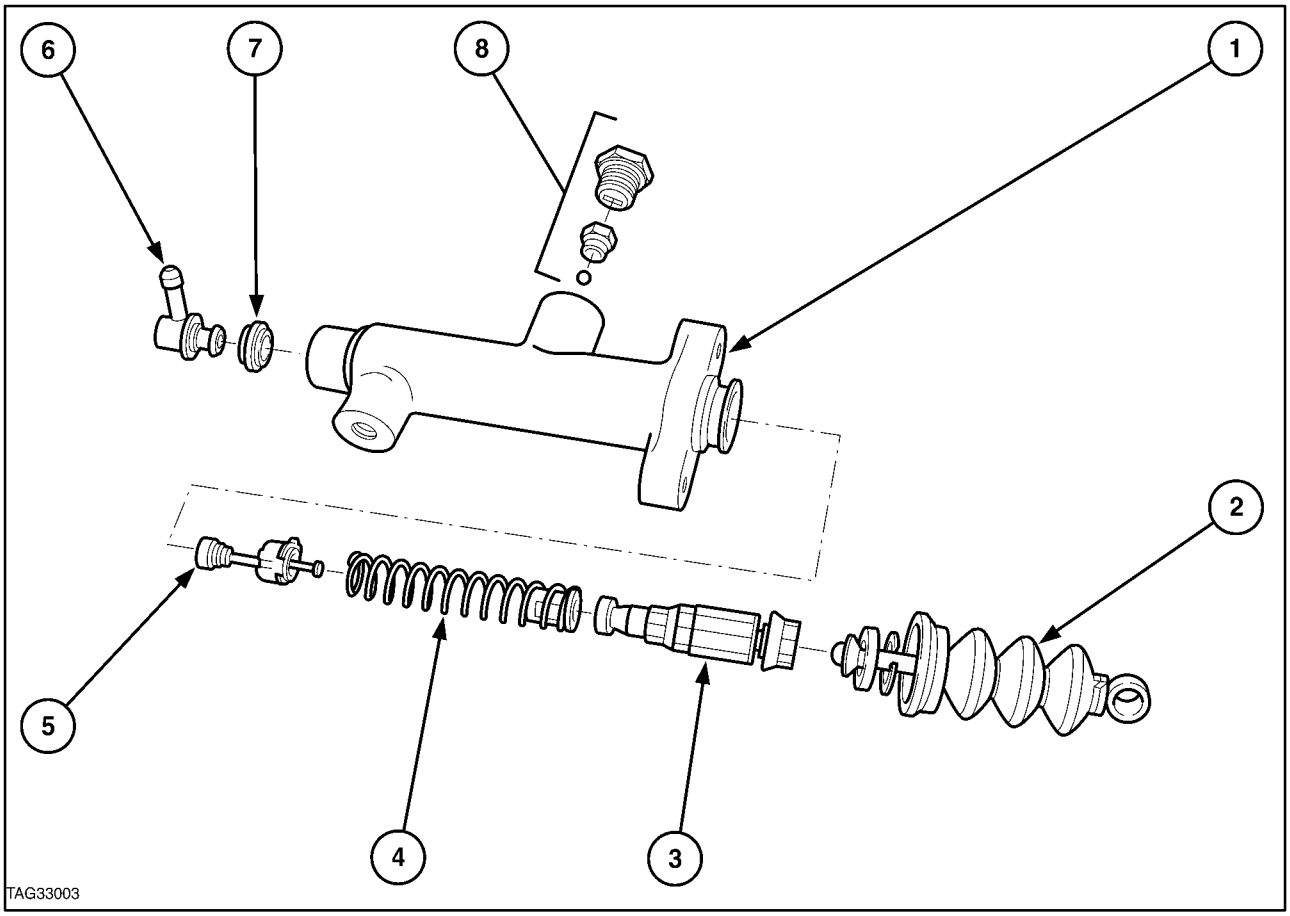

Master Cylinder – Exploded View

3

1. Master Cylinder Body
2. Push Rod and Boot Assembly
3. Spool
4. Spring and retainer
5. Rod and seal
6. Oil inlet adaptor
7. Seal
8. Compensating ball and valve assembly

MASTER CYLINDER – OVERHAUL

Disassembly

1. Roll back push rod rubber sleeve, remove circlip, retaining push rod and spool assembly.

2. Remove the balance tube and the system compensating balls and valves from each cylinder.

3. Gently tap the cylinder, spool end downwards, onto a firm surface to remove the spool assembly.

4. Withdraw the fluid inlet adaptors and hook out end seals.

5. From the spool and spring assembly, bend back the locking tab and withdraw spring assembly. Unhook the rod and disassemble.

Inspection and Repair

1. Inspect the cylinder bore for wear, score marks or burrs. If the bore is not in perfect condition replace the cylinder assembly. Do not attempt to repair.

2. A seal kit is available in Service. When overhauling the master cylinder obtain a kit and replace **ALL** seals.

3. Coat all seals in clean brake fluid prior to fitment.

IMPORTANT: *Use only the specified type of brake fluid (see specifications). The fluid used in this system is a 'Mineral' based fluid. Use of a non specified fluid may cause seal damage and a resultant brake failure.*

Reassembly

1. Reassembly is the reversal of the disassembly procedure.

BRAKE ACTUATOR AND SLAVE CYLINDER – OVERHAUL

Removal

For removal procedures of the brake assembly refer to '*Rear Axle Shaft Assembly Overhaul*' Section 27.

Disassembly

With reference to Figure 4.

1. Remove the split pin and clevis pin and disconnect the brake handbrake and footbrake adjusting rod from the actuating links.

2. Unscrew and remove the nuts and bolts retaining the links to the actuating discs.

3. Unclip the springs retaining the brake master cylinder to the actuating discs and remove the cylinder.

4. Unclip and remove the four actuating disc retaining springs and separate the discs.

NOTE: *Retain the steel balls located between the actuating discs for use during re-assembly.*

5. To replace the seal of the slave cylinder or to inspect the cylinder bore, pull the piston from the cylinder assembly as shown in Figure 5.

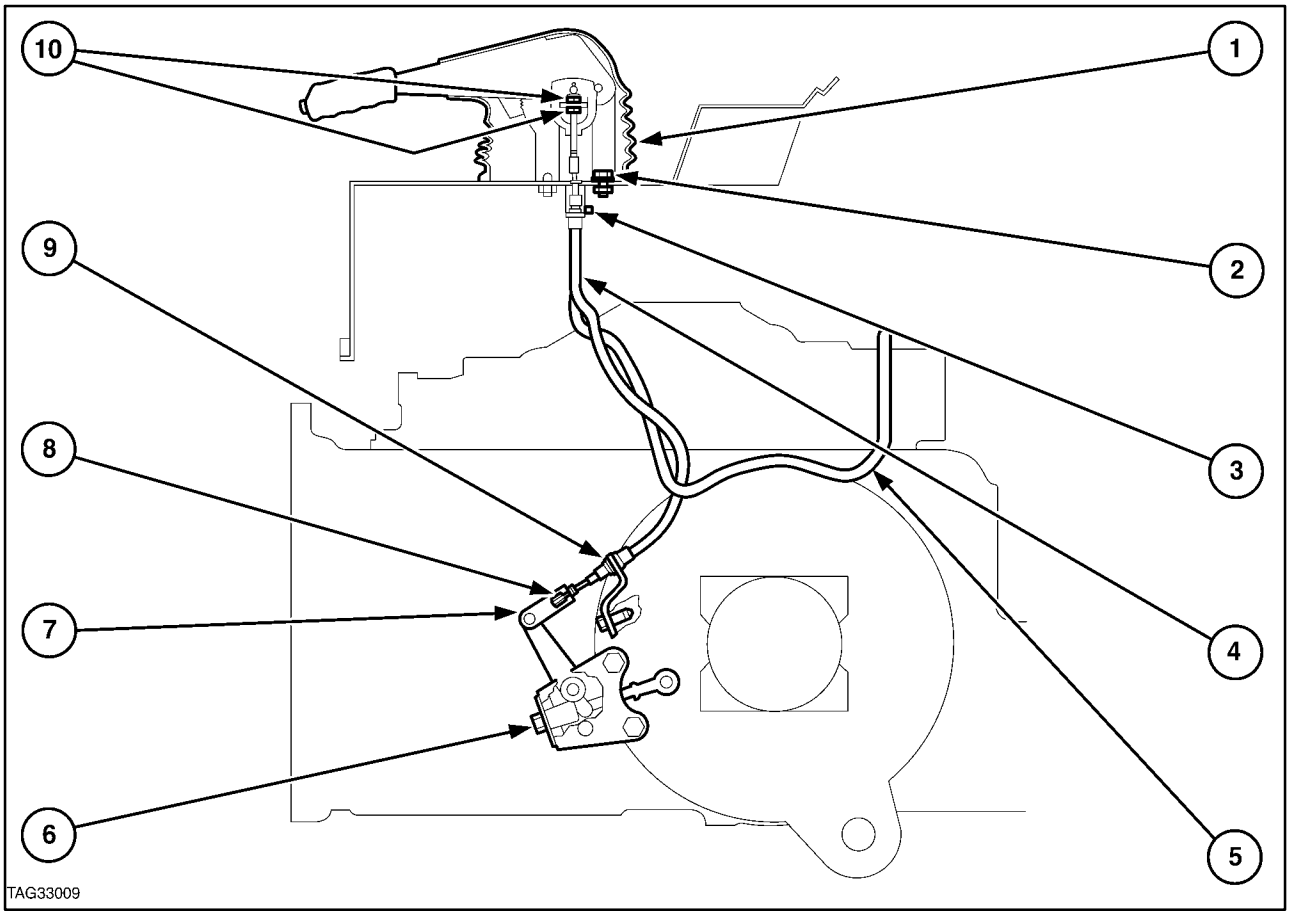

Brake Assembly Components
Standard Rear Axle Half Shaft Assembly

4

1. Planetary Reduction Gears and Carrier
2. Carrier Retaining Bolt and Lock Tab
3. Inner Brake Housing
4. Brake Discs and Actuator
5. Outer Brake Housing
6. Sun Gear and Shaft
7. Axle Shaft and Outer Bearing
8. Axle Shaft Housing
9. Axle Shaft Inner Bearing
10. Shim

Inspection and Repair

1. Clean and inspect all items for damage or excessive wear. Install new components where necessary.
2. Inspect the slave cylinder bore for wear, score marks or burrs. If the bore is not in perfect condition replace the cylinder assembly. Do not attempt to repair.
3. A replacement seal (2) is available in Service. When overhauling the slave cylinder the seal edge should have a pointed, sharp appearance and not rounded.
4. Prior to assembly of the piston (1) to the cylinder coat the seal and cylinder (3) bore in clean brake fluid.

IMPORTANT: *Use only the specified type of brake fluid (see specifications). The fluid used in this system is a 'Mineral' based fluid. Use of a non specified fluid may cause seal damage and a resultant brake failure.*

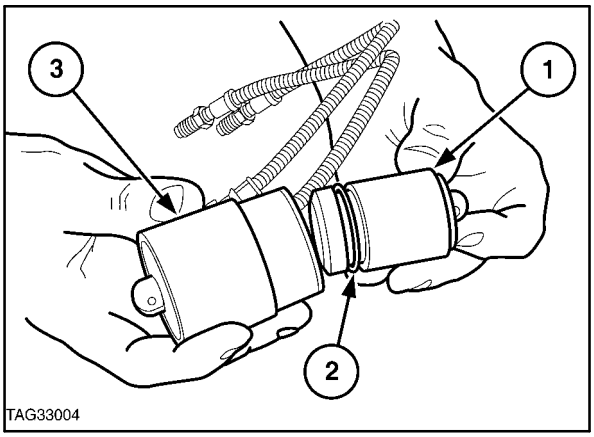

5

Reassembly

1. Reassembly is the reversal of the disassembly procedure.

Installation

Installation of the brake disc follows the removal procedure in reverse, refer to '*Rear Axle Shaft Assembly Overhaul*' Section 6.

SYSTEM BLEEDING

1. Ensure the reservoir is filled up to the maximum line with the specified brake fluid.
2. When bleeding a system which has been completely drained of fluid, it will be necessary to prime the system. Open all the bleed screws and pump the coupled pedals several times, close the bleed screws.
3. Bleed the system using the following sequence, referring to Figure 6: A, B, and if trailer brakes are fitted, C, D and E.

NOTE: *Regularly inspect the fluid level in the reservoir during bleeding. Do not allow it to empty.*

4. Install a suitable rubber tube over the bleed screw. Immerse the tube into a jar of clean and of correct specification brake fluid. Position the jar above the bleed screw, this prevents possible air ingress at the bleed screw.
5. Open the bleed screw and fully stroke the coupled brake pedals several times until 'air free' fluid is entering the jar.

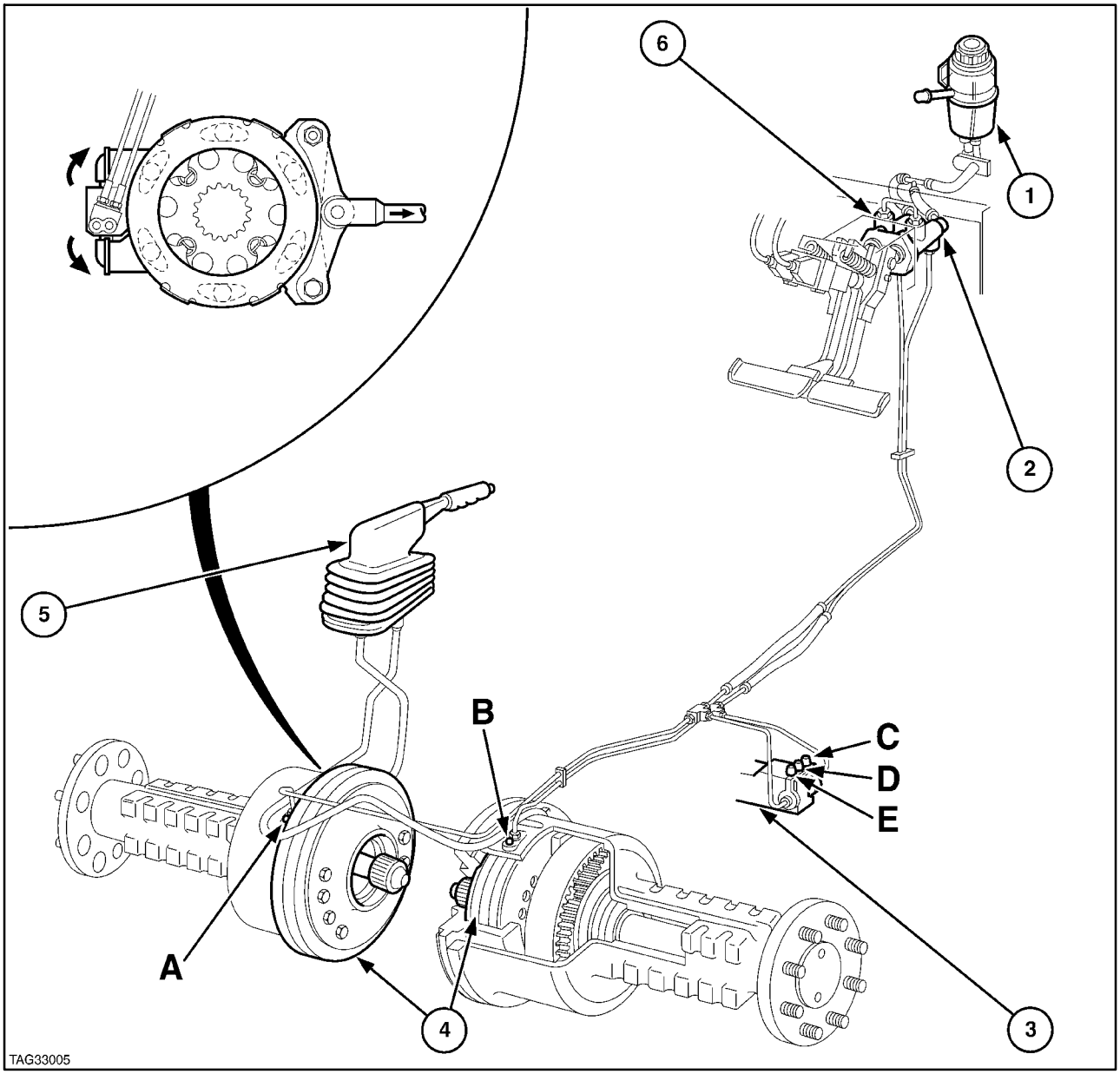

Braking System Component Layout 6

1. Reservoir
2. Right Hand Brake Master Cylinder
3. Trailer Brake Valve (where Fitted)
4. Brake Assemblies
5. Handbrake
6. Left Hand Brake Master Cylinder

A,B,C,D,E Brake Bleed Screws

6. With the pedals held down lock the bleed screw. Repeat procedure in the correct sequence on the remaining bleed screws, until all the air is removed from the system.
7. Check the fluid level in the reservoir.

BRAKE ADJUSTMENT

Footbrake – 12 × 12 and 16 × 16 Models

1. Raise the vehicle and support on stands, remove the 4WD shaft if fitted.
2. Ensure that the handbrake cable adjustment is not affecting the footbrake adjustment. Slacken handbrake cables if necessary.
3. On one side of the tractor tighten the adjuster nut (1) until the wheel just locks, Figure 7. Back off the adjuster by one revolution and a third (8 flats) and ensure that the wheel is free to rotate. Repeat the operation for the other wheel.

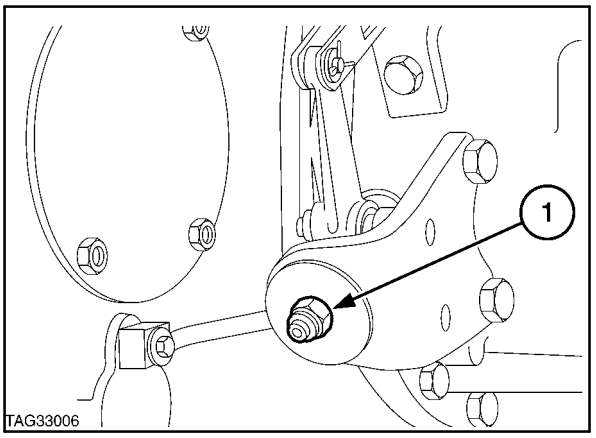

7

Footbrake – 8 × 2 and 16 × 4 models

Free play at the brake pedals should be 1.5 in. (38 mm). With the brake pedals locked together, the tractor should stop in a straight line when the brakes are applied.

1. Adjustment is made to the brake pull rods beneath the tractor. Block the wheels, front and rear, unlock the brake pedals and release the parking brake latch.
2. Loosen the locknut on the left hand brake pull rod, Figure 8, and turn the adjuster nut until free play at the left hand brake pedal is 1.5 in (38 mm). Tighten the locknut.
3. Repeat on the right hand brake pull rod.

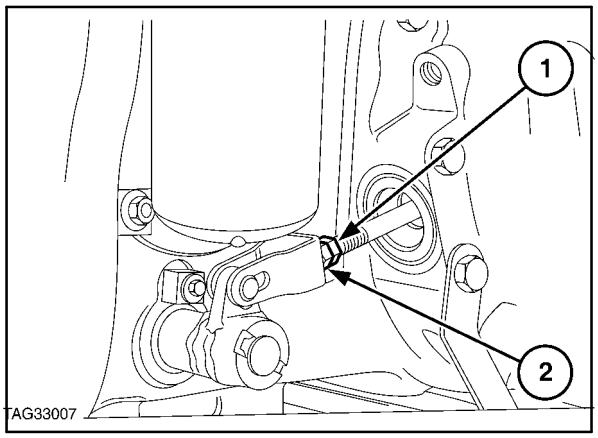

8

Handbrake

1. Pull the handbrake lever on 3 to 4 notches, then tighten the upper adjusting nuts (1) while turning the corresponding wheel, until it just locks. Tighten the lower locknuts (2) to the the handbrake lever. DO NOT move the upper nuts. Repeat this for the other wheel. Apply the handbrake a further 1 to 2 notches and the wheels should be fully locked.

   Release the handbrake completely. Check the cable has fully released, i.e. the clevis pins rotate freely.

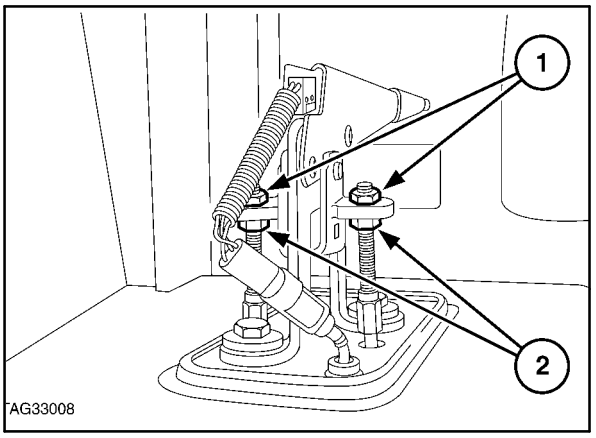

9

Road Test

1. With the brake pedals coupled, drive the tractor and apply the footbrakes. The tractor should stop in a straight line.
2. Repeat the procedure using the handbrake.

HANDBRAKE ASSEMBLY OVERHAUL

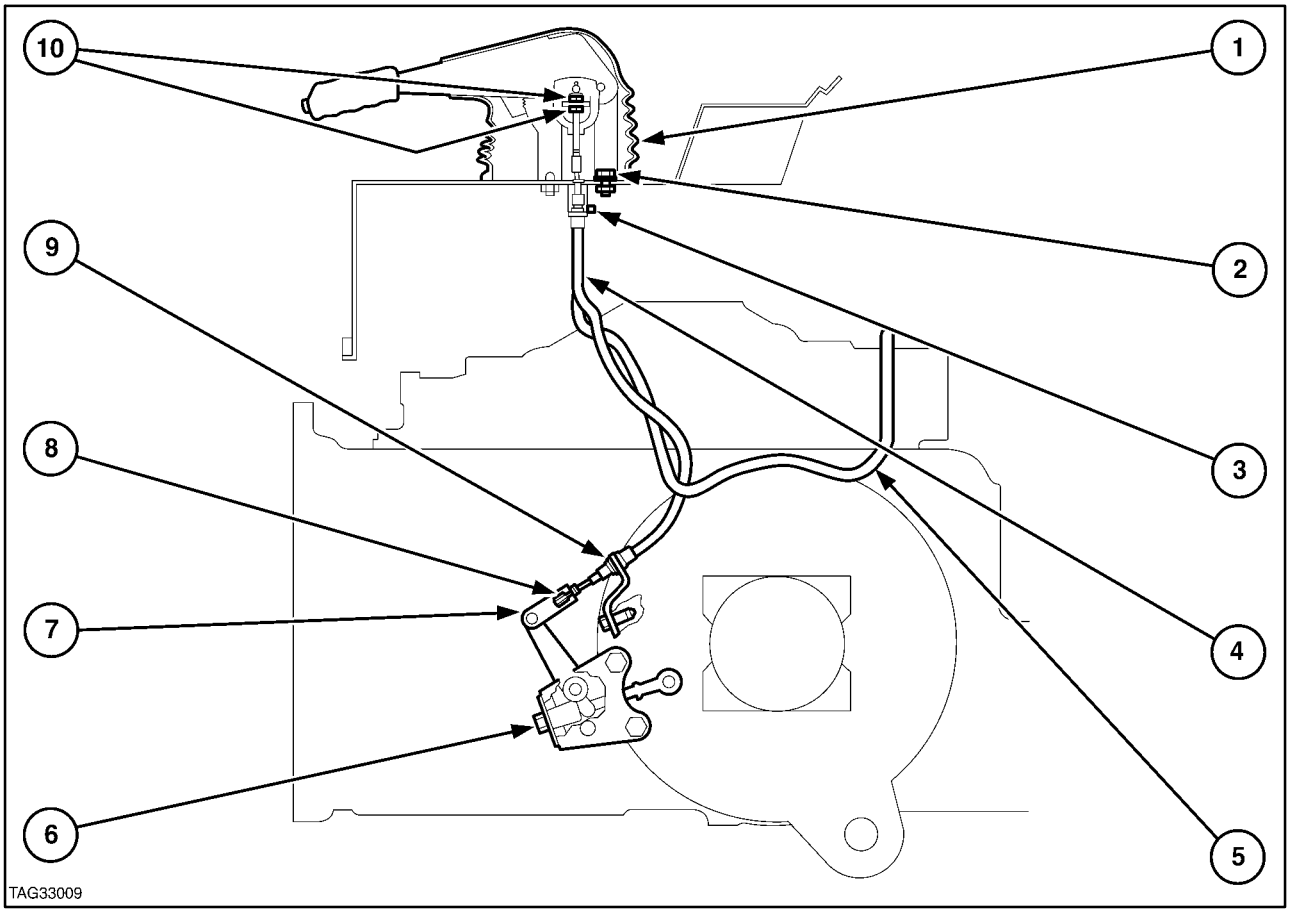

Handbrake Assembly 10

1. Protective Rubber Boot
2. Retaining Bolt – 2 off
3. Cable Retaining Screw
4. Left Hand Cable
5. Right Hand Cable
6. Footbrake Adjuster Nut
7. Clevis
8. Cable End Ferrule
9. 'C' Clip
10. Cable Adjuster and Locknuts

CABLE REMOVAL (12×12 and 16×16 Models)

With reference to Figure 10.

1. Chock a wheel and release the handbrake.
2. Lift the protective rubber boot up from the floor and remove the nuts from the top of the cables.
3. From under the cab/platform, remove the cable end ferrule from the clevis and remove the 'C' clip securing the outer cable to the axle bracket.
4. Remove the upper cable retaining screw.
5. Note the cable routing and remove the cables.

HANDBRAKE LEVER REMOVAL
(12 × 12 and 16 × 16 Models)

With reference to Figure 11.

1. Chock a wheel and release the handbrake.
2. Lift the protective rubber boot up from the floor and remove the nuts from the top of the cables.
3. Disconnect the handbrake warning light/buzzer switch connector.
4. Remove the two bolts securing the lever to the floor and remove the lever from the vehicle.

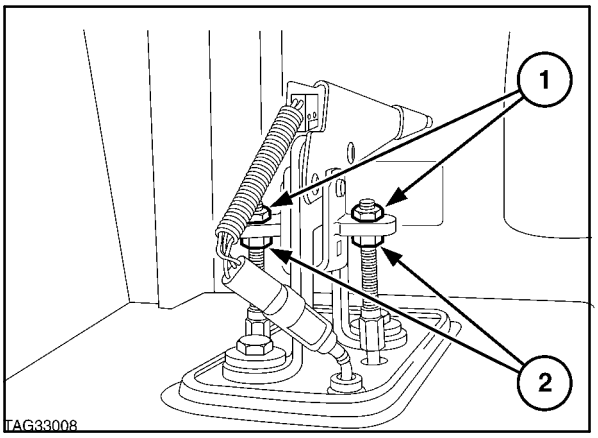

11

PARKING BRAKE ASSEMBLY
(8 × 2 and 16 × 4 models only)

1. Chock a wheel and release the parking brake.
2. Remove the split pin from the lower end of the lever rod and withdraw the lever and rod assembly from the tractor.

INSPECTION (All Models)

1. Inspect the cables for kinking, inner to outer cable tightness, frayed wire and outer covering damage, replace if damaged.
2. Inspect the lever and rod assembly of 8 × 2 and 16 × 4 models, ensure the rod is not bent.
3. Inspect the ratchet mechanism of the handbrake lever, 12 × 12 and 16 × 16 models and the ratchet teeth of the footbrake pedal of the 8 × 2 and 16 × 4 models. Replace if the teeth are worn.

INSTALLATION (All Models)

Installation of all the handbrake components is the reverse of the removal procedure observing the following points:

- Tighten the handbrake lever to floor securing bolts to a torque of 33 lbf.ft (45 Nm)
- Ensure the cable is routed correctly, avoiding moving components and without any sharp bends. Secure as required using nylon straps.
- If split pins have been removed always replace with new items.
- Ensure the footbrakes are correctly adjusted and then adjust the handbrake. Adjustment procedures are detailed in the Brake System Component Overhaul Section of this Chapter.

BRAKE PEDALS AND LINKAGE OVERHAUL

BRAKE PEDAL REMOVAL (12 × 12 and 16 × 16 Models)

1. Remove the right hand side panel from the instrument console assembly.
2. Disconnect the two return springs (6) from the pedal assemblies.
3. Remove the split pins and clevis pins (4) securing the master cylinder push rods to the brake pedals.
4. Remove the circlip retaining the brake pedal pivot shaft (7) and withdraw the shaft.
5. Collect the brake pedal spacer (1) and remove the two brake pedals from the tractor.

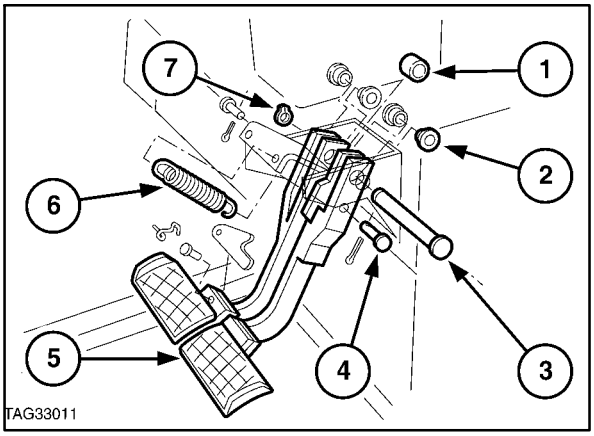

Brake Pedal Components 12

1. Pedal Spacer
2. Pivot Shaft Bush – 4 off
3. Pedal Pivot Shaft
4. Master Cylinder to Brake Pedal Clevis Pin
5. Brake Pedals
6. Return Spring
7. Pedal Pivot Shaft Retaining Ring

BRAKE PEDAL AND LINKAGE REMOVAL (8 × 2 and 16 × 4 Models)

1. Chock the rear wheels and release the parking brake.
2. Disconnect the two return springs (2) from the pedal assemblies (1), located under the floor pan.
3. Remove the split pin and clevis pin securing the right hand brake pedal to the brake pull rod clevis.
4. Remove the circlip and washer retaining the right hand pedal to the brake cross shaft (8) and withdraw the right hand pedal assembly.

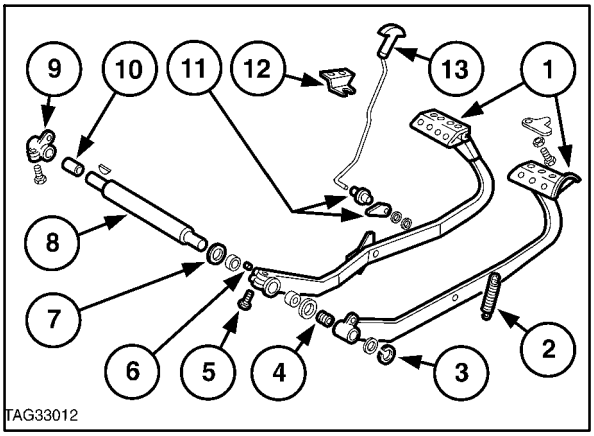

Brake Pedal Components 8 × 2 Models 13

1. Brake Pedal Assemblies
2. Return Spring
3. Right Hand Pedal Retaining Ring
4. Bush
5. Left Hand Pedal Locking Bolt
6. Woodruff Key
7. Washers
8. Brake Pedal Cross Shaft
9. Left Hand Lever
10. Bush
11. Park Brake Pivot Arm and Pivot Post
12. Park Brake Lever Guide
13. Park Brake Lever

5. Remove the pinch bolt locking the left hand brake pedal to the cross shaft. Slide the pedal from the cross shaft, collecting the woodruff key if loose in the recess and washer.

6. If required the brake cross shaft may be removed using the following procedure:

- Remove the split pin and clevis pin securing the left hand operating lever to the brake pull rod clevis.

- Drain the rear axle oil.
- Pull the shaft from the centre housing using the left hand, brake operating lever.

INSPECTION AND REPAIR

1. Clean and inspect all components for damage or excessive wear. Install new components where necessary.

2. Replace the brake cross shaft oil seals if the shaft has been removed.

3. If the brake cross shaft bushes are worn,

i) Remove the oil seals, then using puller, Tool No. 954–C remove the bushes.

ii) Use bushing kit, Tool No. 818, to install the new bushes

iii) Press new shaft oil seals into the housing with the steel face of the seals facing outwards.

iv) Ensure there are no burrs on the brake shaft then install into the centre housing.

v) Refill the rear axle with the correct grade and quantity of oil, specification Ambra Multi–G, 14.5 imp.gallons (17.4 U.S. gallons, 66 litres).

RE–ASSEMBLY AND INSTALLATION

Re–assembly and installation of the brake pedals and linkage follows the removal and disassembly procedures in reverse.

On reassembly and installation observe the following requirements:

- Grease the ends of the operating rods and clevis pins with a suitable grease.
- Tighten the brake pedal and operating lever pinch bolts to a torque of 42–56 lbf.ft (57–76Nm).
- Adjust the foot brakes and handbrake as described previously in the Brake System Component Overhaul Section of this Chapter.

STEERING

Hydrostatic Steering System

SPECIFICATIONS

HYDROSTATIC SYSTEM	2WD	4WD
Pump specifications		
Minimum Pump Output		
Litres/min.	31.0	31.0
Imp.Galls/min	6.8	6.8
U.S. Galls/min.	8.2	8.2
Steering Motor Displacement	125cc/revolution	150cc/revolution
Relief Valve Maximum Differential Pressure Setting	145 Bar 2100 lbf.in^2	170 Bar 2465 lbf.in^2
Absolute Gauge Pressure	153–163 Bar 2220–2370 lbf.in^2	180–190 Bar 2620–2770 lbf.in^2
	TWO WHEEL DRIVE AXLE	
Maximum Steering angle	55°	
Steering Wheel Turns (Lock to Lock)	3.4	
Cylinder	Double Acting Balanced	
	Short Wheel Base	Long Wheel Base
Turning Radius with Brakes	3.27 m	3.53 m
Turning Radius less Brakes	3.66 m	3.88 m
Toe–out	0–13 mm	0–13 mm
	FOUR WHEEL DRIVE AXLE	
Maximum Steering angle	55°	
Steering Wheel Turns (Lock to Lock)	4.7	
Cylinder	2 off Double acting Unbalanced	
Turning Radius with Brakes (4WD disengaged)	3.45	
Turning Radius less Brakes (4WD disengaged)	4.04	
Toe–In	13mm	

TIGHTENING TORQUES

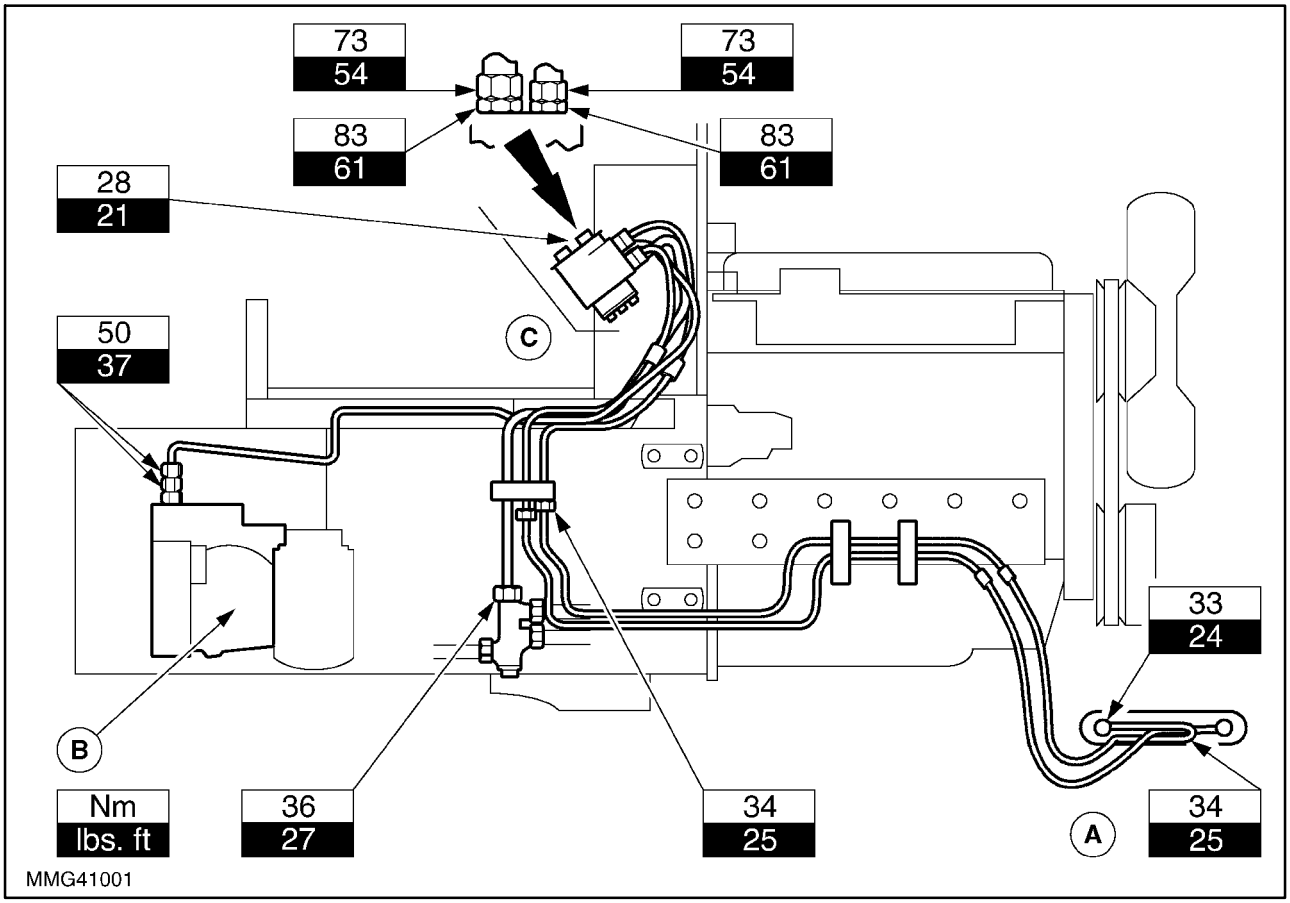

A. Steering Cylinder
B. Variable Displacement/Tandem Gear Pump
C. Steering Motor

14

Steering General	Nm	Lbf.ft.
Steering Wheel Retaining Nut	23.0	17.0
Front Wheel Nut 2WD	133.0	98.0
Front Wheel Nut 4WD	475.0	350.0
Motor End Cover	23.0	17.0
Cylinder Ball-joint to Extension	43.0	32.0
Cylinder Ball-joint to Axle	176.0	130.0
Cylinder Ball-joint Clamps	43.0	32.0
Cylinder Ball-joint Nuts	176.0	130.0
Cylinder Extension Tube to Cylinder	271.0	200.0
Column to Frame Bolt	23.0	17.0
Cylinder, Tube End Pin Retaining Bolt (4WD)	23.0	17.0

SPECIAL TOOLS

DESCRIPTION	NEW HOLLAND TOOL NUMBER	V.L.CHURCHILL TOOL NUMBER
Pressure Gauge (0-6000 lb/in^2)	292870	FT8503A
Roto-glyd Seal Installer	294056	-
Adaptor (Gauge to Hose)		FT8503-8
Test Hose Part No. 83936707 Adaptor (Test hose to tractor tube) 7/16 JIC Male x 9/16 JIC Male		

DESCRIPTION AND OPERATION

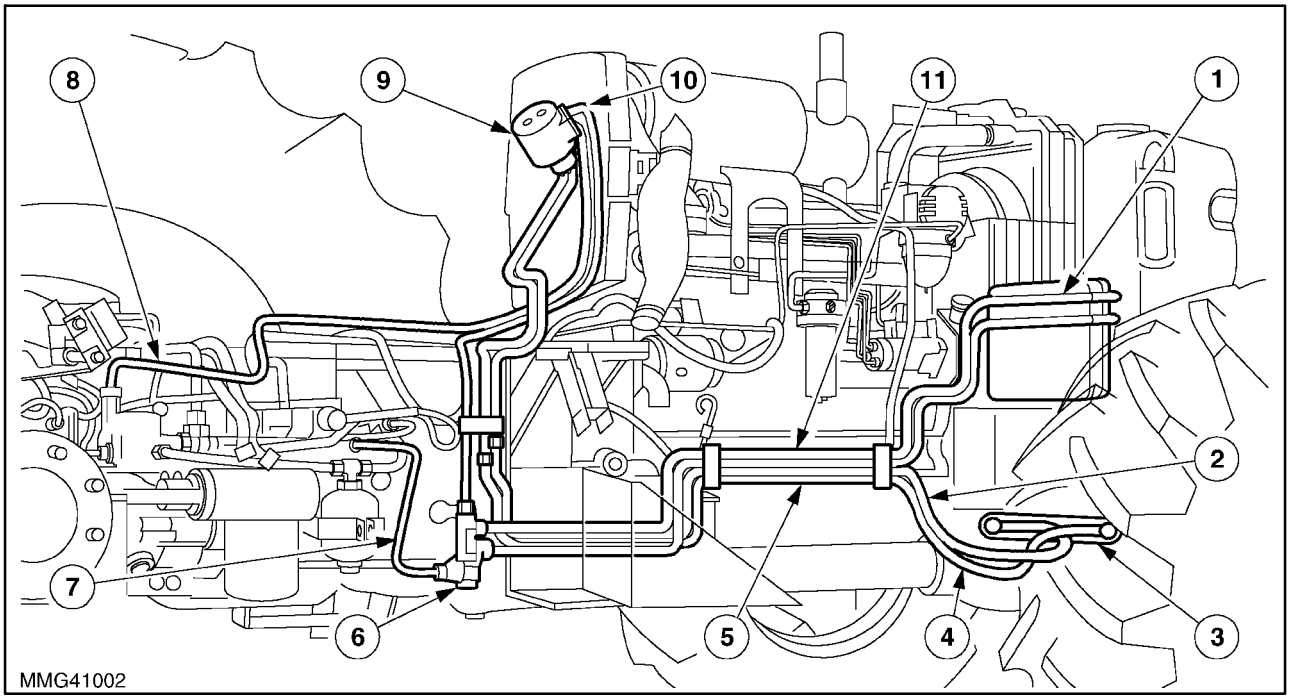

Hydrostatic Steering System Component Layout – CCLS Pump Model 15

1. Transmission Oil Cooler
2. Left Hand Turn Hose
3. Steering Cylinder
4. Right Hand Turn Hose
5. Cooler Outlet Line
6. Cooler Bypass Valve
7. Transmission / Rear Axle Lubrication Line
8. Steering Pump Output Line
9. Steering Motor
10. Seering Return / Lubrication Line
11. Oil Cooler Outlet Line

All models have fitted as standard, hydrostatic steering systems that are powered when the engine is running by hydraulic pumps mounted on the rear axle.

There are two types of steering pump used depending on whether the hydraulic system has a closed centre or open centre system.

Both open and closed centre hydraulic systems incorporate a steering pump as part of the hydraulic pump assemblies. The closed centre system has a unique suction filter, whereas the open centre system shares a combined function filter.

The pumps, driven by the P.T.O. idler gear, pressurise the steering column operated steering motor. The pressurised oil from the steering motor drives the axle mounted double acting steering cylinder (2WD), or twin cylinders (4WD).

The steering motor is similar across the vehicle range and is bolted to a bracket within the steering console and connected to the steering column by a splined shaft.

The steering column is adjustable for varying angles of tilt on all models.

On two wheel drive units the steering cylinder is fixed at one end to the front axle beam and at the other to an eye on the spindle steering arm.

On four wheel drive units two steering cylinders are used, one for each wheel. The cylinders are fixed at one end to the axle casing and the piston end to steering arms from the swivel housings.

The pressure relief valve for the system is contained within the steering motor itself.

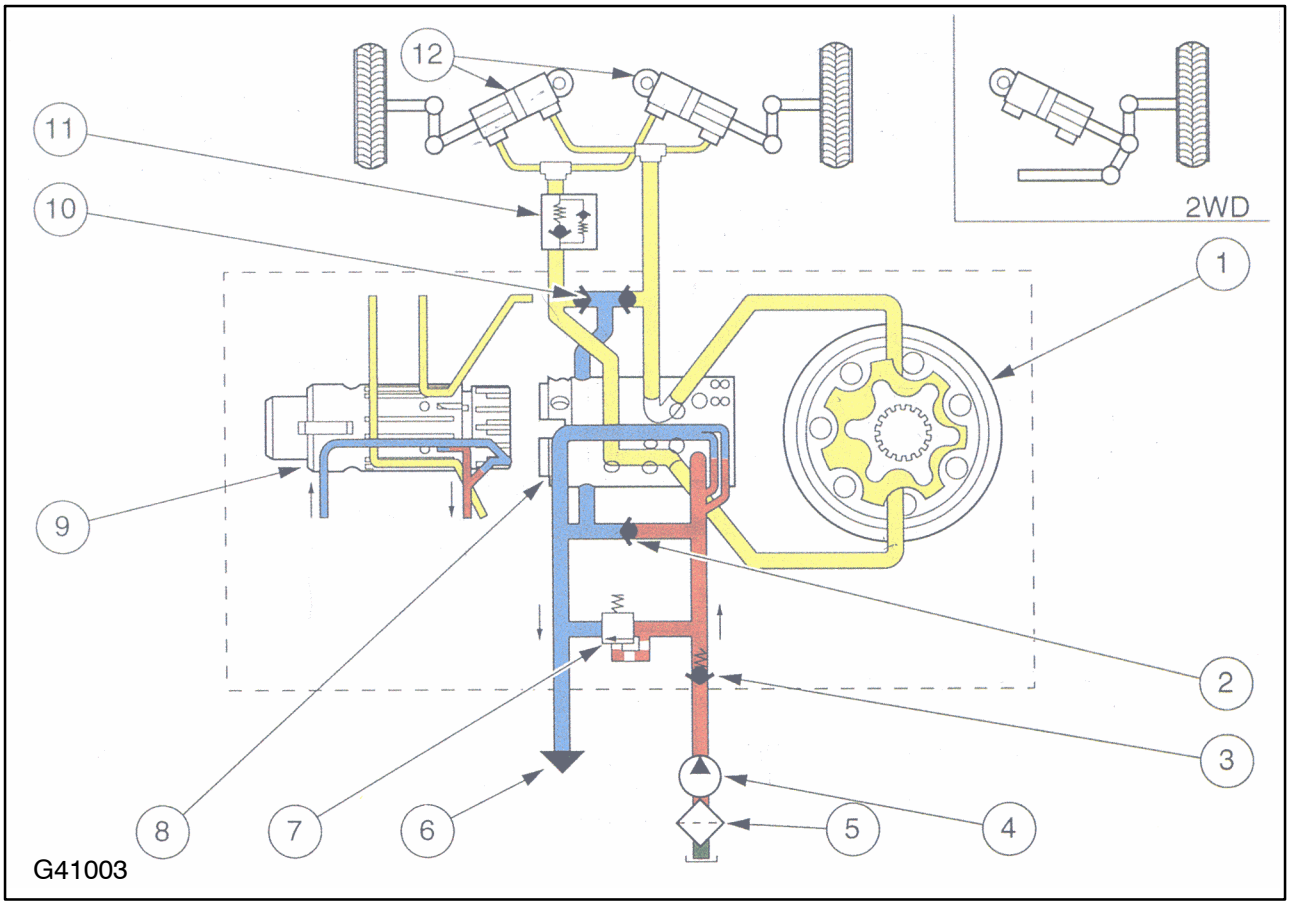

Steering Operation Schematic – Neutral Position 16

1. Metering Unit
2. Check Valve
3. Non Return Valve
4. Pump
5. Filter
6. Return via Cooling and Lubrication
7. Pressure Relief Valve
8. Control Valve Sleeve
9. Control Valve Spool
10. Suction Valves (2WD Only)
11. Bias Valve (2WD Only)
12. Steering Cylinder/s

Suction Oil

Return Oil
(Restricted by cooling and Lubrication)

Trapped Oil

Pump Oil

OPERATION

Oil is drawn from the rear axle and into the pump through a filter, pressurised by the rotation of the gears, and expelled through the pump outlet port to the steering motor, via a resonance damper filter which reduces the noise from the system and smooths the output from the pump. The pressurised oil when received at the steering motor is directed to the steering actuating cylinder when the steering wheel is turned.

The steering motor incorporates a metering unit which regulates the volume of oil supplied to the cylinder so that it is proportional to the angular movement of the steering wheel. The metering unit in combination with the check valve also allows the steering to be operated **MANUALLY** without pressurised oil being supplied from the pump.

Suction valves, item 10 Figure 16, only used on two wheel drive models, prevent cavitation in the steering cylinder as oil is transferred from a small area to a large area when the steering motor is in the neutral position.

The system is fully hydrostatic and as such there is no mechanical connection between the steering column and the steering wheels.

Neutral Position

With the steering wheel held still, the leaf springs in the steering motor return and hold the spool and sleeve in the neutral position. This ensures no more oil is supplied to the steering cylinder, Figure 16. The trapped oil is, however, allowed to transfer between the left and right turn sides of the cylinder/s, allowing the wheels to react to the ground to provide feedback for the driver.

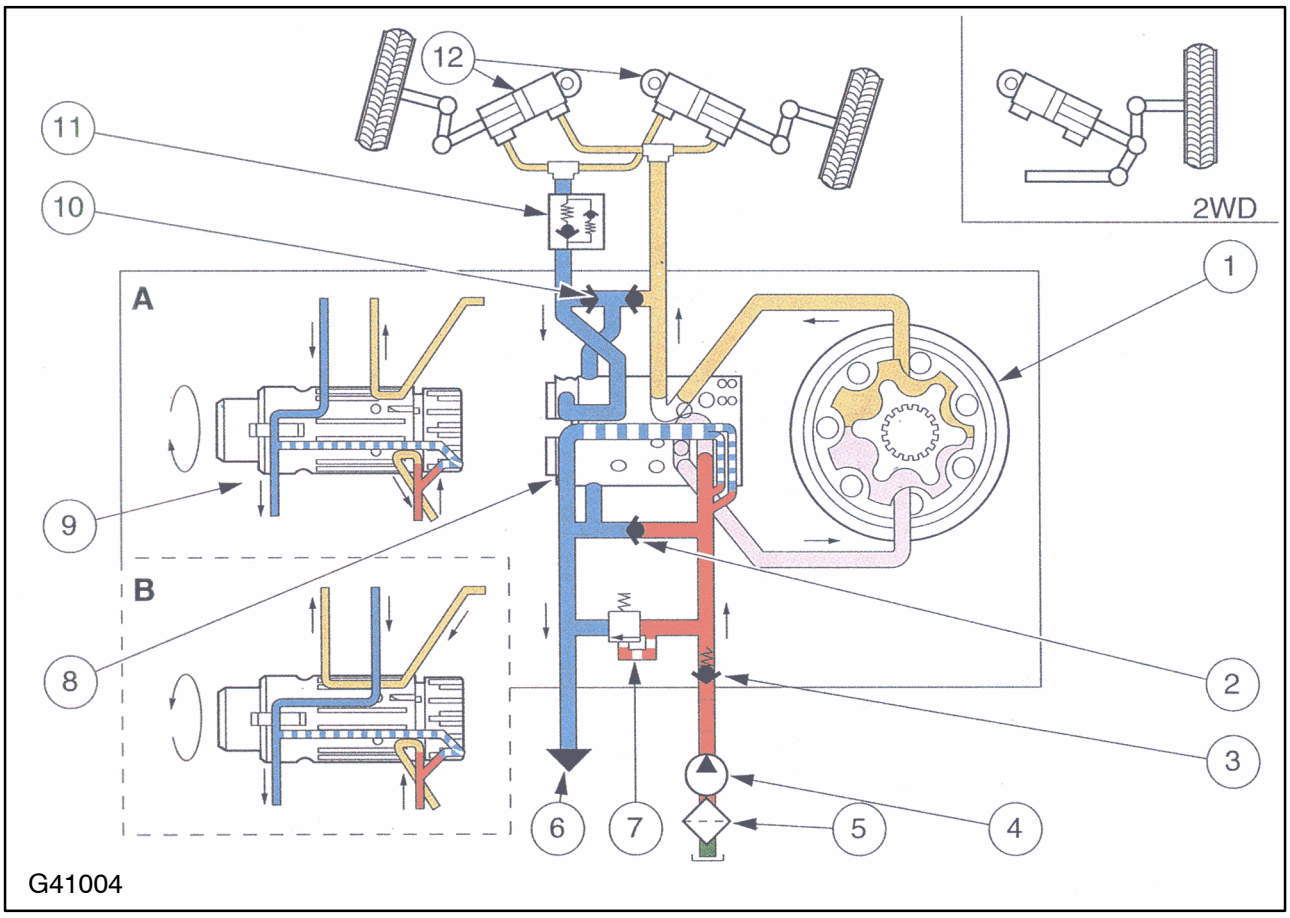

Oil Flow Schematic 17

A– Right Hand Turn B– Left Hand Turn

Suction Oil

Metering Unit Supply

Return Oil (Restricted by cooling and Lubrication)

Pressure Supply

Metered Oil To Steering Cylinder

Right Hand Turn

When the steering wheel is turned the movement of the control valve spool in its sleeve forms a series of passages. During right turns the oil flows through the sleeve along a groove in the valve spool and into a passage in the steering motor housing which leads to the metering unit, Figure 17.

The metering unit is turned by the drive shaft and directs oil along another set of passages in the spool and sleeve and into the steering cylinder. Return oil from the other side of the cylinder is directed through the valve spool and sleeve to a return passage in the housing.

Left Hand Turn

When turning the wheel to the left oil flows along the sleeve and operates in a similar manner as described in right hand turn, Figure 17.

Manual Right Turn

In the event of a power steering pump failure or loss of oil pressure, the power steering system can be operated manually. Turning the steering wheel rotates the metering unit rotor and forces oil into the rod side of the power steering cylinder.

On the suction side of the metering unit, return oil flows from the cylinder and is drawn through the check valve to feed the metering unit.

Manual Left Turn

Turning the steering wheel rotates the metering unit rotor which forces oil into the piston side of the power steering cylinder.

When additional oil supply is required, as in making a left turn, additional oil is drawn from the power steering reservoir through the check valve to the metering unit.

FAULT FINDING

IMPORTANT: *When effecting a repair the cause must be corrected to avoid a repeat failure.*

PROBLEM	POSSIBLE CAUSE	REMEDY
No steering or excessive effort to steer	1. Air in system	1. Check for loose connections or damaged tubing. Purge system of air.
	2. Steering system relief valve sticking/faulty	2. Check system pressure.
	3. Worn pump	3. Inspect and repair.
	4. Leaking steering cylinder	4. Inspect and repair.
	5. Broken or damaged steering column coupling	5. Inspect and replace as required.
	6. Damaged or worn metering unit	6. Inspect and replace as required.
Steering wanders	1. Excessive play in steering linkage joints	1. Inspect and replace as required.
	2. Leaking steering cylinder	2. Inspect and repair.
	3. Damaged or worn metering unit	3. Inspect and replace as required.
Drift to Left, Two Wheel Drive only	1. Bias valve faulty	1. Replace or repair
Front wheels surge when steering	1. Leaking steering cylinder	1. Inspect and repair.
	2. Damaged or worn metering unit	2. Inspect and replace as required

SYSTEM TESTING

When the hydrostatic steering system is in operation, the pressure of oil supplied by the steering pump, item (1), Figures 18 and 19, to the steering motor, can rise towards the maximum setting of the steering motor relief valve, which is 145–170 bar (2100–2465 lbf/in^2) depending on tractor model.

Item (2), figures 18 and 19 show the return from the steering motor

The pressure of oil, however, on leaving the steering motor and returning via the oil cooler to the 16 × 16 transmission and PTO clutch lubrication circuits, is limited to a maximum pressure of 7 bar (100 lbf/in^2) by the lubrication circuit relief valve, located within the transmission control valve.

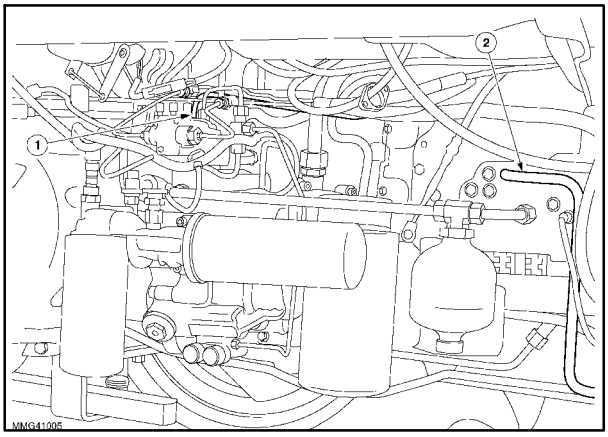

18

Differential Pressure
(Tractors with Tandem Gear Pump)

Differential pressure is the difference in pressure between the supply and sump ports on the steering motor. Measured (gauge) pressure is equal to the relief valve setting plus system back pressure.

System back pressure varies between 8.3 and 18.6 bar (120 and 270 lbs/in^2) depending on hydraulic system.

The flow of oil on leaving the steering motor returns to the pump body for distribution to the low pressure and lubrication circuits. The pressure of oil returning from the steering motor is regulated at a pressure of 15.2 – 16.6 bar (220–240 lbf/in^2) by the low pressure regulating valve in the PTO clutch assembly at 2100 revs/min. As the pressure is regulated, excess oil in the low pressure circuit flows through the regulating valve, into an adjacent lubrication circuit relief valve which limits the pressure of oil in the lubrication circuit to 5.0–5.7 bar (72–83 lbf/in^2) at 4.5 ltrs/min (1.1 gpm).

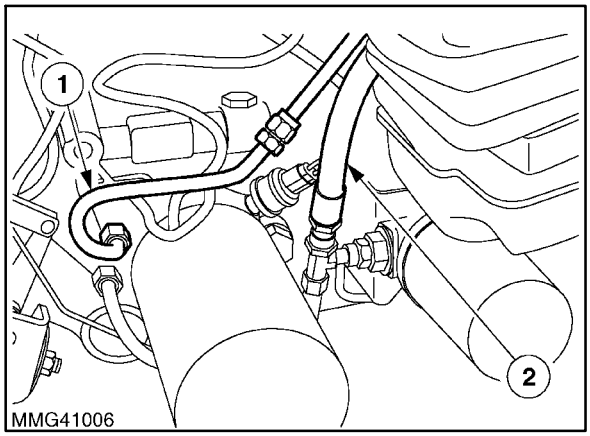

19

Steering Pump

There is no relief valve in the steering/low pressure pump. The following practical test will determine if steering pump output is sufficient to allow satisfactory operation of the steering system.

Steering Test – All Models

1. Set engine speed to 1000 rev/min.

2. Turn steering quickly from lock to lock. If steering is operating correctly the reaction of the steering should be immediate with no time delay between turning the steering wheel and movement of the wheels. At full lock the relief valve in the steering motor should be heard to blow and the engine speed should drop to approximately 970 rev/min.

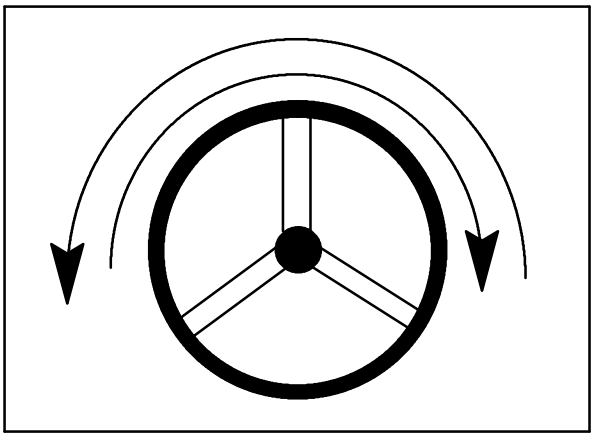

20

Steering Relief Valve Pressure Test

IMPORTANT: *There is no relief valve in the steering pump and the following pressure test must only be performed as specified below. Failure to observe this precaution may result in severe damage to the hydraulic pump.*

1. Turn steering onto full left hand lock.

2. Disconnect left hand turn feed hose at steering cylinder.

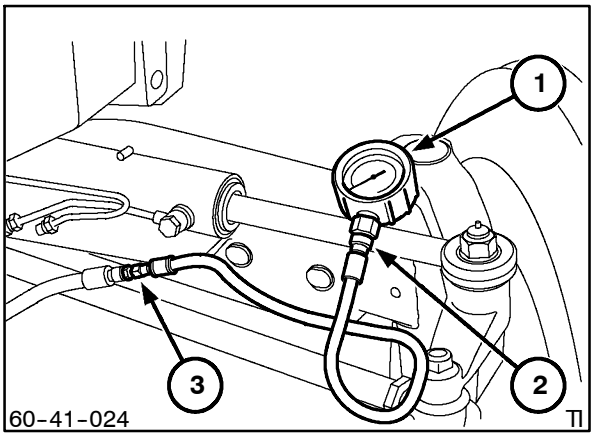

21

3. Install a 0–6000 lbf/in^2 pressure gauge FT. 8503A, item 1, Figure 21, using adaptor FT8503–8, item 2, Figure 21 and a locally procured 7/16 JIC male x 9/16 JIC male adaptor, item 3, Figure 21.

4. Using kit 292870 install adaptor 293874 and 291318 into the place of the banjo fitting of the steering hydraulic cylinder.

5. Start tractor and set engine speed to 1450 rev/min. Turn steering wheel to the left with a pull of approximately 22 N (2.25 kgf, 5 lbf) and observe the pressure reading.

NOTE: *The use of a force greater than 5 lbf. at the rim of the steering wheel may lead to slightly inaccurate readings due to the pumping action of the hydrostatic steering motor.*

If the steering test was satisfactory but the pressure readings are away from specification the relief valve in the steering motor must be adjusted.

The pressure reading should be:–

153–163 bar (2220–2370 lbf/in^2) for 2WD tractors
180–191 bar (2620–2770 lbf/in^2) for 4WD tractors

6. If the system pressure is not to specification proceed to Relief Valve Adjustment.

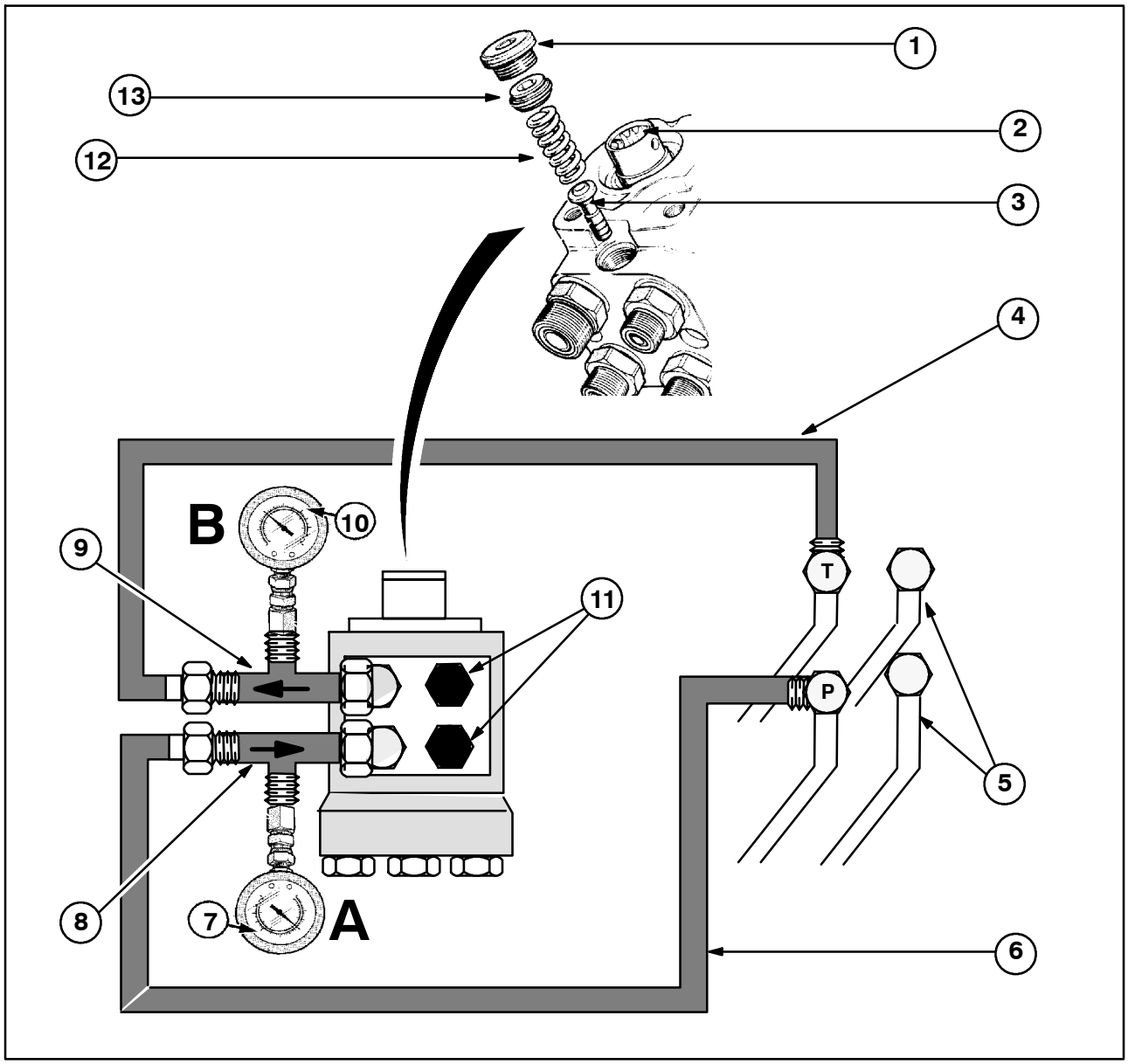

22

Steering Motor Relief Valve Adjustment

1. Plug
2. Steering Shaft
3. Relief Valve
4. Fabricated Steering Motor Output Hose
5. Tractor Tubes to Steering Cylinder
6. Fabricated Hose for Pump Supply to Steering Motor
7. Pressure Gauge 0–5000lbf.in^2
8. Size 8 ORS Swivel Running Tee
9. Size 10 ORS Swivel Running Tee
10. Pressure Gauge 0–500lbf.in^2
11. Size 6 ORS Blanking Cap
12. Spring
13. Adjuster

Relief Valve Adjustment – All Models

With reference to Figure 22.

NOTE: *To adjust the steering system relief valve it is necessary to remove the steering motor from the steering bracket, to gain access to the hexagon headed adjusting screw.*

1. Disconnect the steering motor from the steering bracket, as detailed previously in this Chapter, and remove from the tractor.
2. Fabricate suitable test hoses to connect from the tractor pressure and return tubes. Connect the hoses into locally procured tee pieces and install pressure gauges. Start the engine and idle between 1450 and 1500 rev/min. Run the tractor until the transmission oil reaches normal working temperature of approximately 68°C (155°F).

3. With the engine running, turn the steering motor shaft to obtain full lock. The pressure gauge reading at point 'A' should read 162 bar (2350 lbf.in^2) on 2WD models and 190 bar (2750 lbf.in^2) on 4WD models. The gauge pressure at point 'B' should be in the region of 17 bar (250 lbf.in^2).

4. To establish actual (differential) pressure subtract gauge 'B' reading from the gauge 'A' reading. The differential pressure should be to the specification of:

   Gauge 'A' 162 bar (2350 lbf.in^2) minus Gauge 'B 17 bar (250 lbf.in^2) =
   145 bar (2100 lbf.in^{2}on 2WD models
   Gauge 'A' 190 bar (2750 lbf.in^2) minus Gauge 'B 17 bar (250 lbf.in^2) =
   142 bar (2500 lbf.in^2) on 4WD models

5. If the pressure readings are not correct, reset the adjuster (item 13), 22, using an 8mm hexagon key. Half a turn on the adjuster equates to approximately 200 lbf.in^2 (13.8 bar).

STEERING MOTOR - OVERHAUL

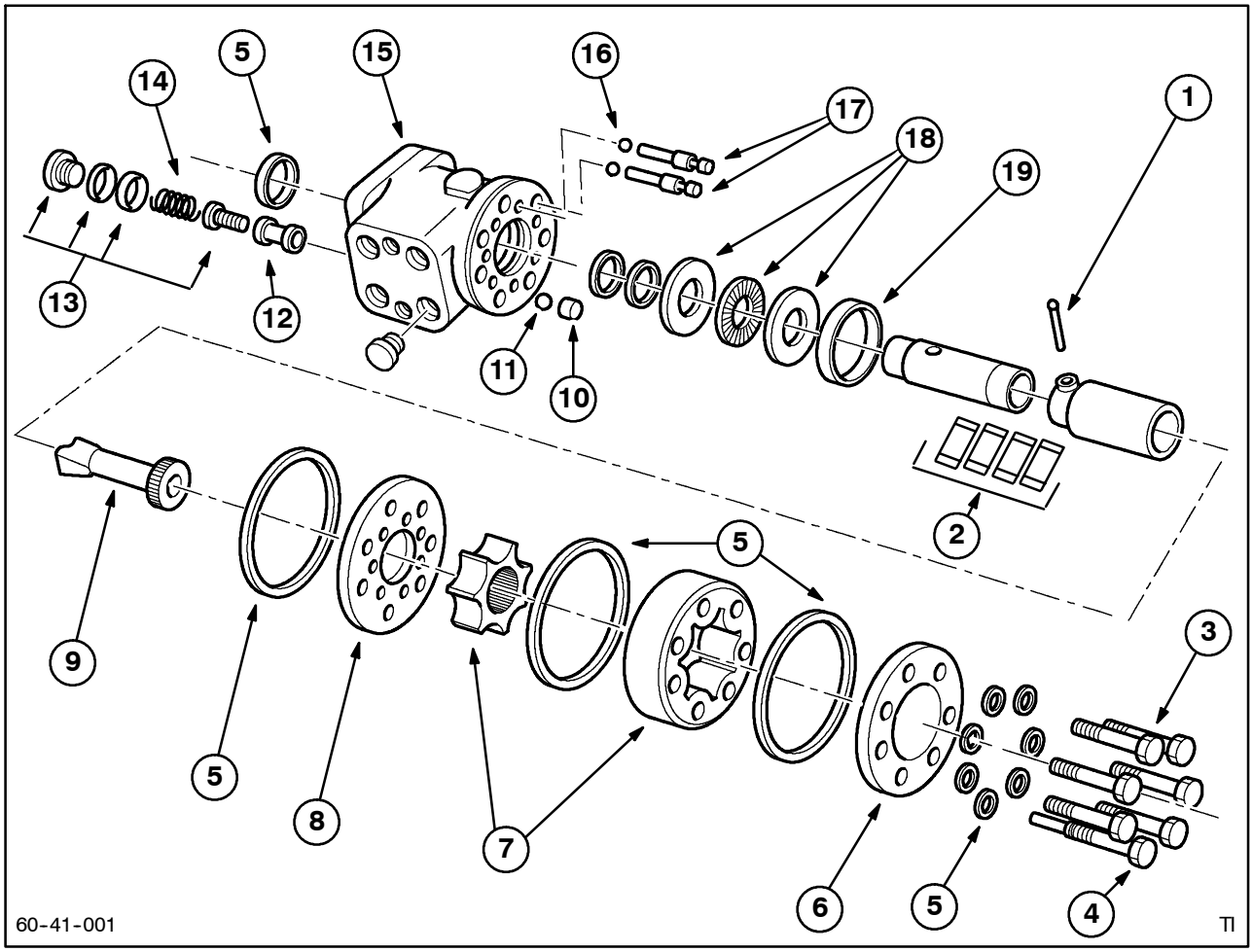

Steering Motor 23

1. Pin
2. Centering Springs
3. Retaining Bolts
4. Dowel Pin Bolt
5. 'O' Ring Seal (Kit)
6. End Plate
7. Rotor and Stator Assembly
8. Manifold Plate
9. Drive Shaft
10. Retainer
11. Ball
12. Relief Valve Seat
13. Relief Valve (Kit items)
14. Spring
15. Complete Assembly
16. Ball
17. Pin
18. Thrust Bearing and Washers
19. Spacer

NOTE: *Parts/Motors are common between the two steering pumps, with the exception of items 7,10,12 and 13, Figure 23.*

Removal

1. Position the tractor on a hard level surface and apply the parking brake.

2. To gain access to the steering motor :-
   Raise and remove the engine hood
   Remove the steering column consoles
   Remove the cab access panels
   Remove the cab to engine fire wall.

3. Disconnect the four supply/return tubes and 'O' ring seals from the steering motor and cap the ends of the tubes.

4. Remove the roll pin from the drive collar to separate the steering shaft, Figure 24.

5. Remove the four bolts at the base of the steering column and slide the steering motor from the upper section of the steering column, Figure 24.

6. Remove the steering motor from the front of the cab through the engine compartment.

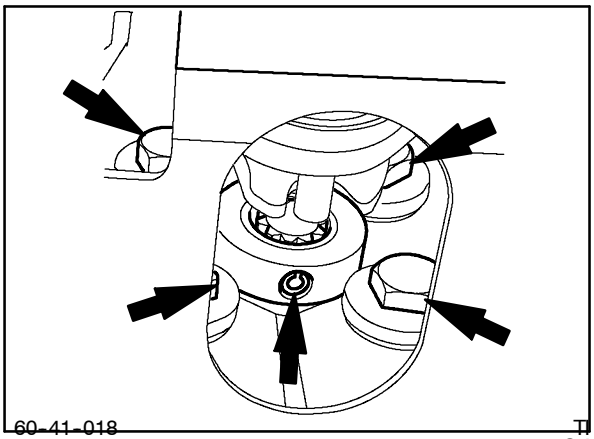

24

DIsassembly

1. With the steering motor connectors removed note position of the non return valve, see Figure 34.

2. Hold the steering motor securely in a vice using a tube connector as shown in, Figure 25.

NOTE: *The position of the pin bolt must remain the same on re-assembly.*

3. Remove the end plate bolts, end plate and 'O' ring, Figure 25.

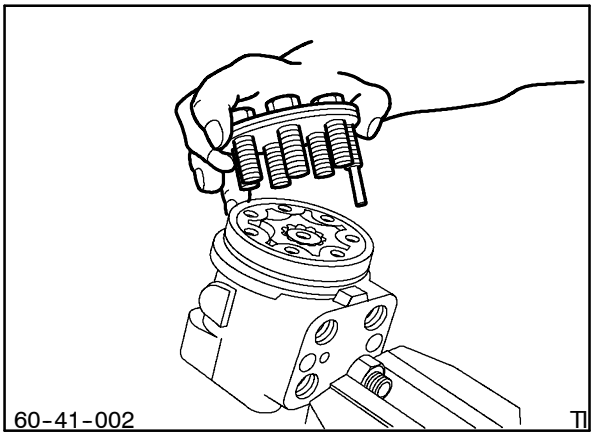

25

4. Remove metering unit, valve plate and 'O' ring seals, note mating surfaces for correct re-assembly, Figure 26.

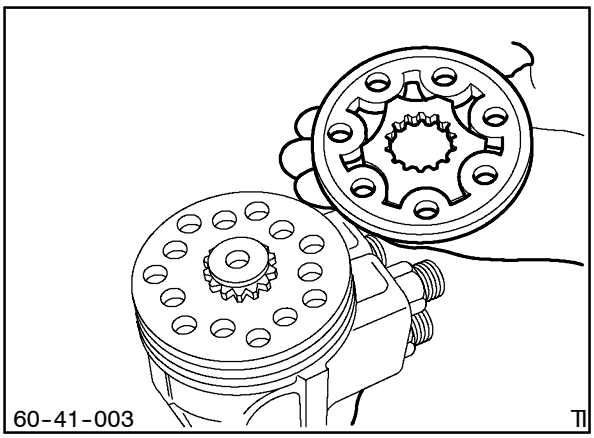

26

5. Lift out rotor drive-shaft, Figure 27.

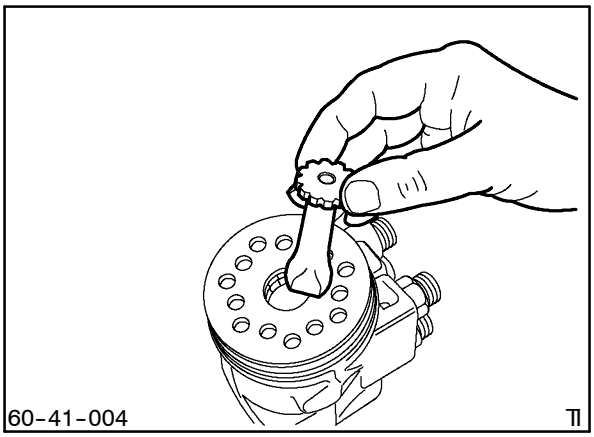

27

6. Unscrew the check valve retainer, Figure 28 and shake out the check and suction valves.

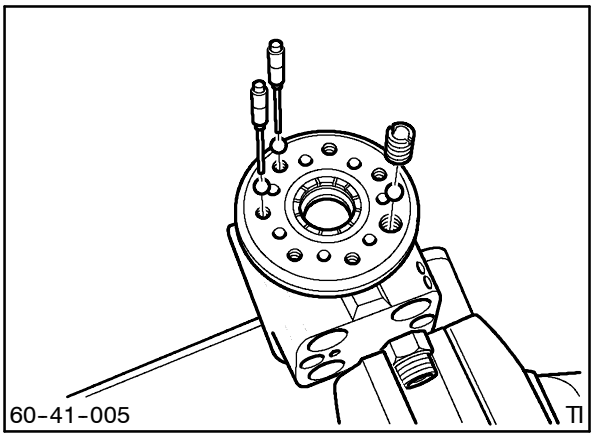

28

7. Remove the relief valve assembly, Figure 29.

IMPORTANT: *The relief valve must be set to the correct pressure setting on re-assembly. Follow the correct procedure as detailed under the heading 'Pressure relief valve setting', of this Chapter.*

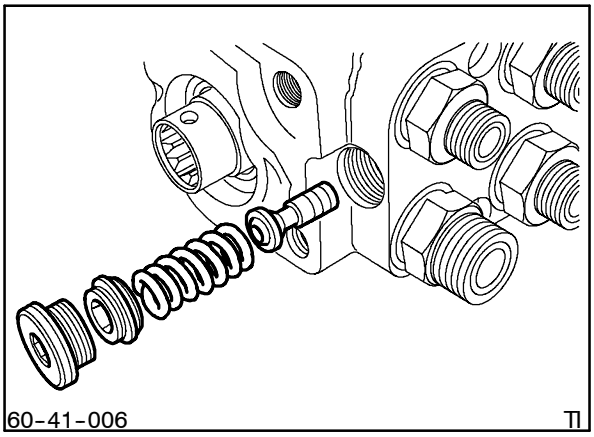

29

8. Remove the inner and outer valve sleeves, bearings and thrust washer, Figure 30.

NOTE: *When removing spool and sleeve ensure drive pin is in a horizontal position so that it cannot fall into an internal gallery and make removal difficult.*

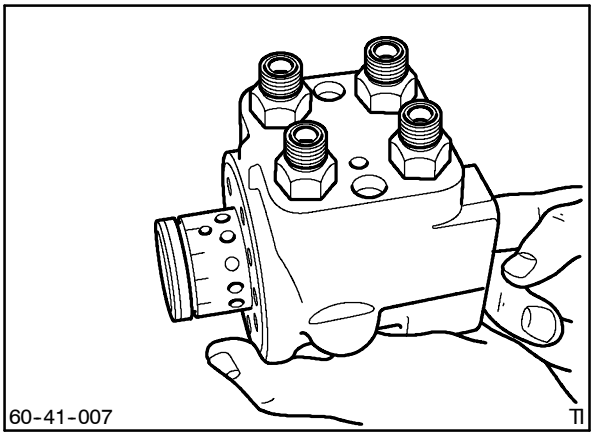

30

9. Once spool is disassembled from the body ensure oil seal is removed, Figure 31.

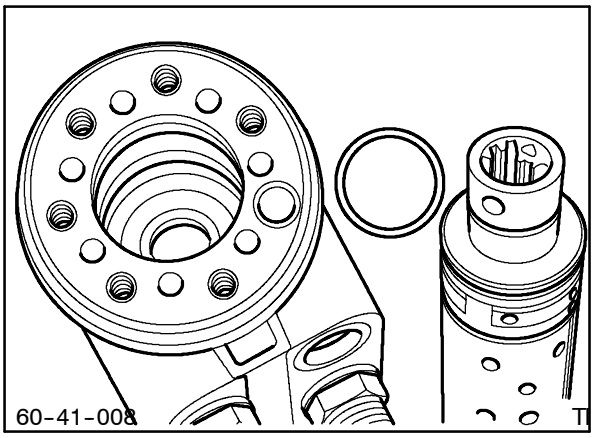

31

IMPORTANT: *Upon re-assembly ensure washer, item 1, Figure 32 is installed with chamfer towards the valve sleeve.*

10. Remove the control valve spool and sleeve, Figure 32.

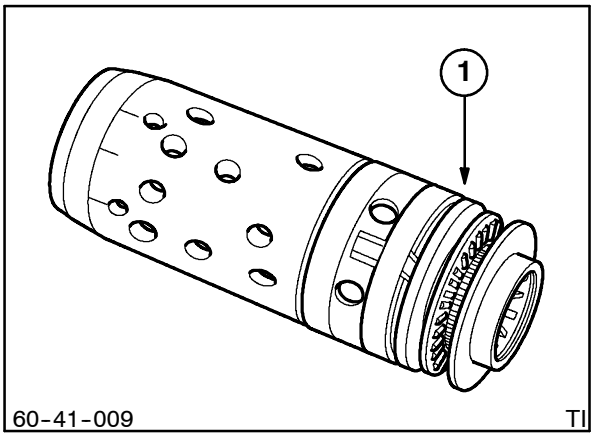

32

11. Remove centering springs, Figure 33.

NOTE: *Arrangement of the leaves must remain the same upon re-assembly.*

12. Remove drive pin, Figure 33.

13. Push inner sleeve from outer sleeve.

14. Remove 'O' ring and back-up ring.

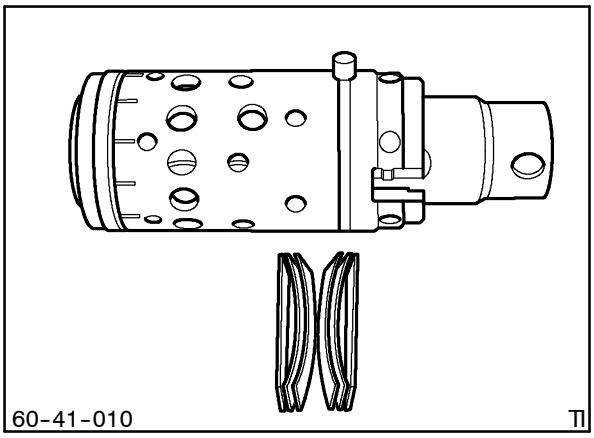

33

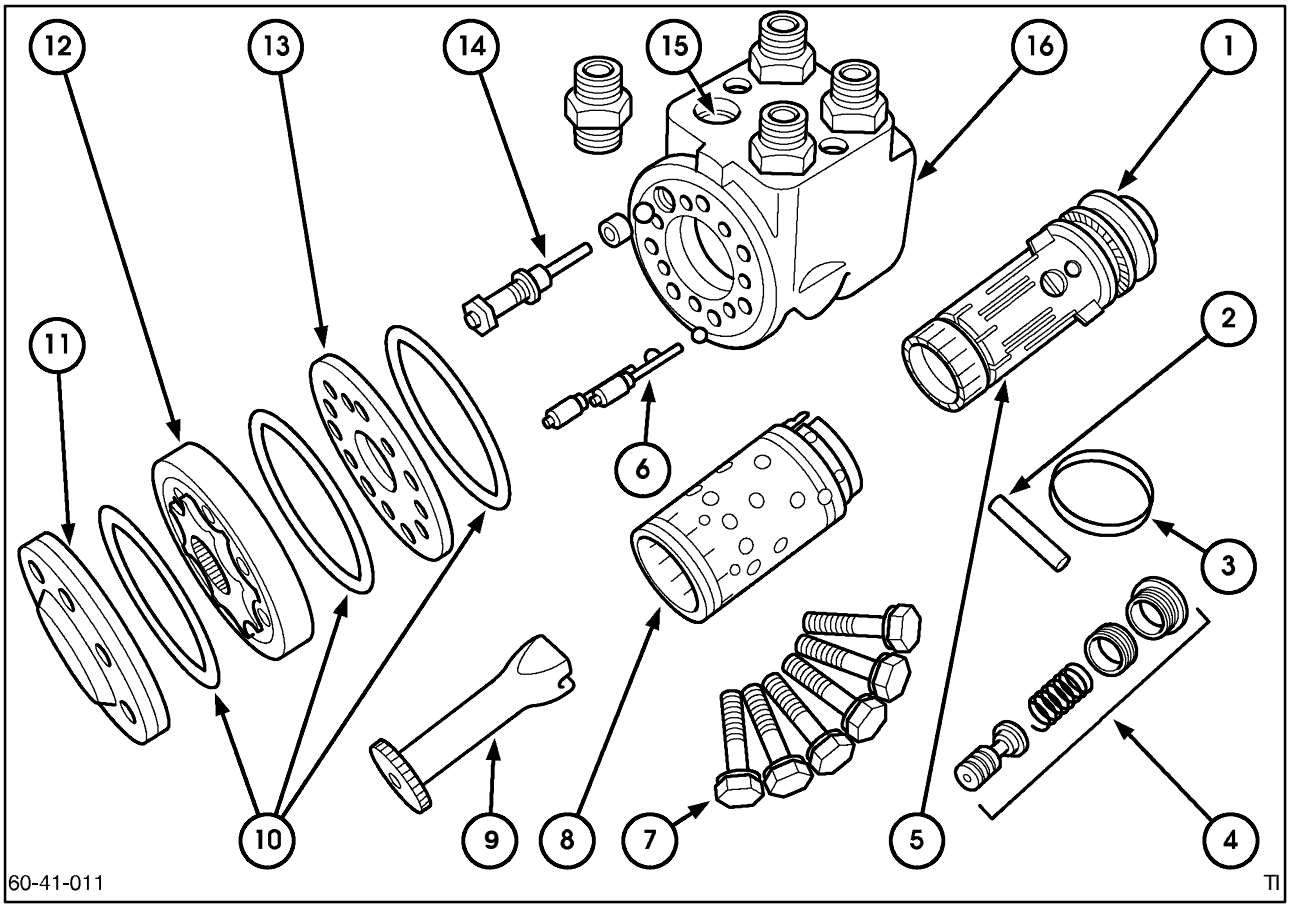

Hydrostatic Steering Components 34

1. Thrust Washers and Bearing
2. Drive Pin
3. Retaining Ring
4. Relief Valve
5. Control Valve Spool
6. Suction Valves
7. Bolts
8. Control Valve
9. Drive Link
10. 'O' Ring
11. End Plate
12. Metering Unit
13. Distributor Plate
14. Check Valve Bolt
15. Non Return Valve
16. Housing

Inspection

1. Wash all parts in a suitable solvent to remove any foreign particles and dry with a clean lint free cloth or compressed air.

2. Inspect valve sleeves for, damage or wear. Minor burrs or scratches can be removed with a fine abrasive. Ensure all parts are thoroughly cleaned prior to re-assembly.

3. Check leaf springs for damage. Replace if necessary.

4. Discard all 'O' ring seals and replace with new seals on re-assembly.

Re-Assembly

1. Assemble inner and outer sleeves so that the leaf spring slots align.

2. Install the drive pin, Figure 35.

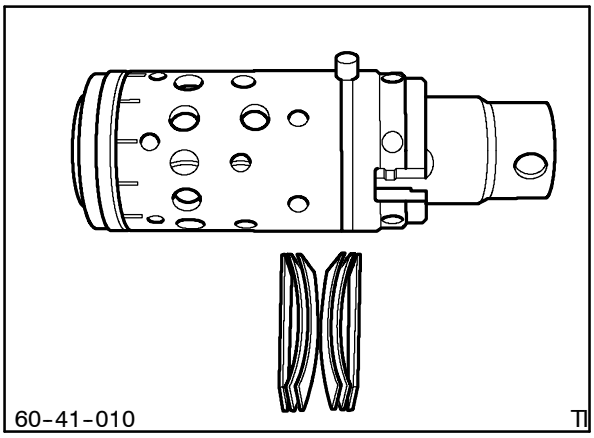

35

3. Install the leaf springs and push fully into position, Figure 36.

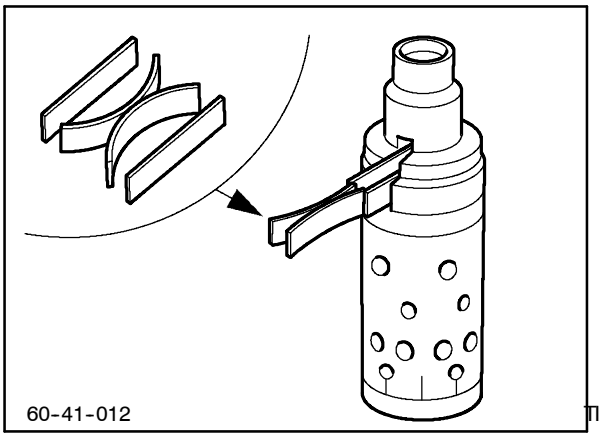

36

4. Install leaf spring retainer, and bearing, Figure 37.

NOTE: *The inner bearing race must be positioned with the chamfer side facing the spool, Figure 32.*

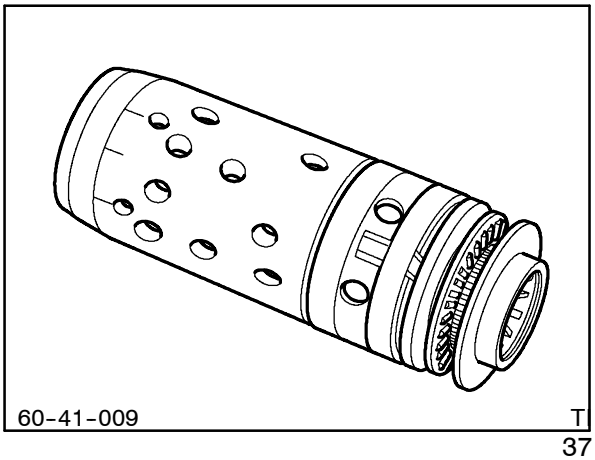

37

5. Apply a light coating of hydraulic oil onto the sleeve item 2 and insert into the steering motor body, item 3, Figure 38.

6. Coat the 'O' ring and back-up ring, item 4, Figure 38, with hydraulic fluid and position them onto the seal installer guide.

   – Use New Holland special tool No. 294056 to install oil seal type roto-glyd.

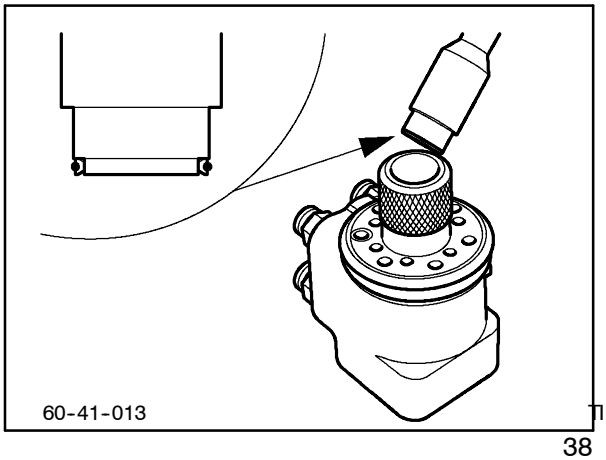

38

7. Position the seal guide tool into the sleeve and push down with a twisting action, Figure 39.

8. Remove tools once the seal has seated.

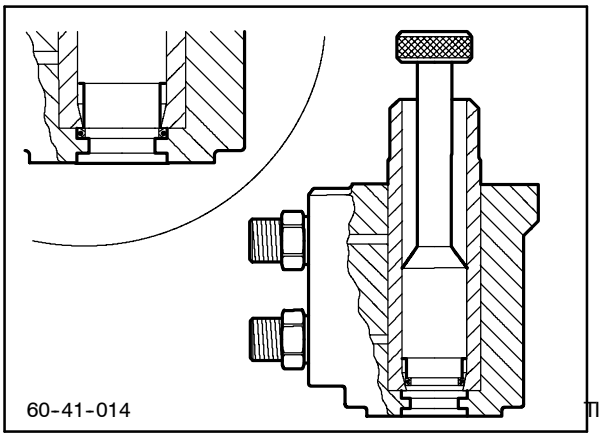

39

9. With the seal installed in the motor body refit control valve, Figure 40.

NOTE: *Ensure that the Drive is in a horizontal position to aid re-assembly.*

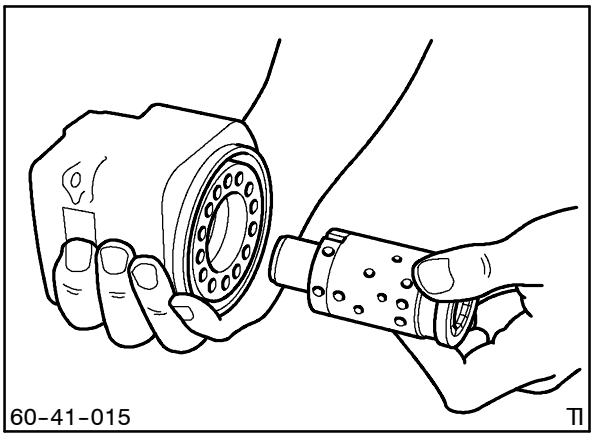

40

10. Once the control valve is seated correctly refit the check and suction valves, Figure 41.

11. Screw the check valve down to just below the surface of the housing.

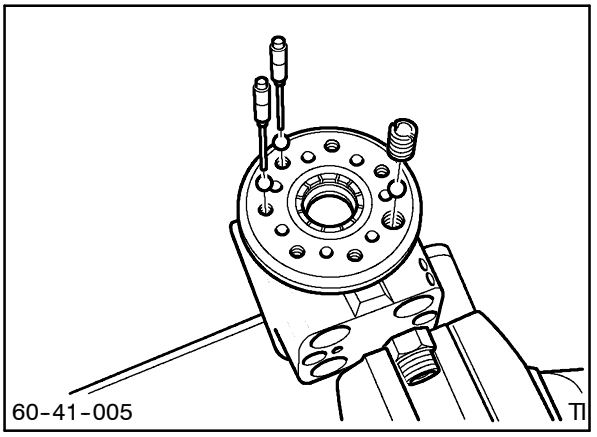

41

12. Refit the 'O' Ring and place the end plate in position.

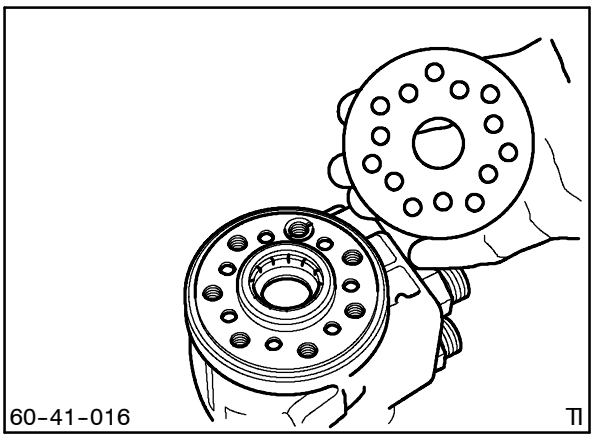

42

Metering Unit Reassembly

1. To aid reassembly install the control valve into the housing so that the drive pin is perpendicular to the front face of the housing.

2. Install drive link into the steering motor body, Figure 43, ensuring that the link engages correctly over the drive pin.

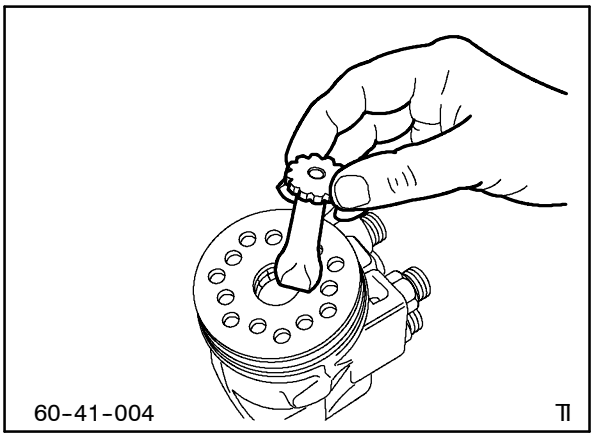

43

3. Assemble the metering unit rotor and stator and install new lightly greased 'O' rings to either side of the stator, Figure 44.

4. Assemble the rotor and stator onto the drive link.

5. Install the end plate and bolts, ensure the pin bolt(1) is fitted in position '7'. Tighten the bolts in two steps, first to 8 lbf.ft (10.8 Nm) and then to 21 lbf.ft (28.4 Nm) in sequence as shown, Figure 45.

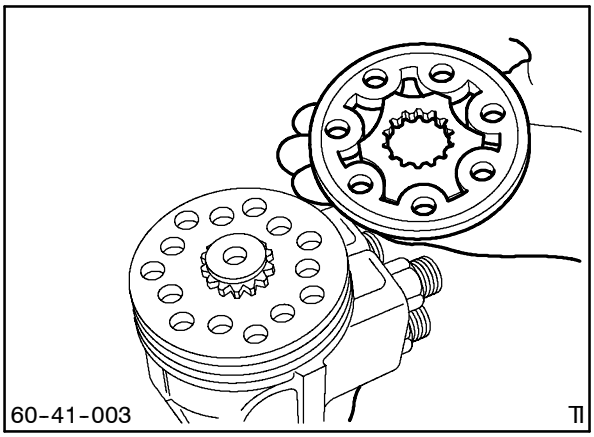

44

6. Install the relief valve assembly, items 1, 2 and 3 Figure 46., leaving the plug, item 4 out until after the relief valve has been adjusted.

7. Check to ensure the motor turns freely without binding.

IMPORTANT: *The relief valve must be set to the correct pressure setting after the motor has been re-assembled. Follow the correct procedure as detailed under 'Pressure relief valve setting', of this Chapter.*

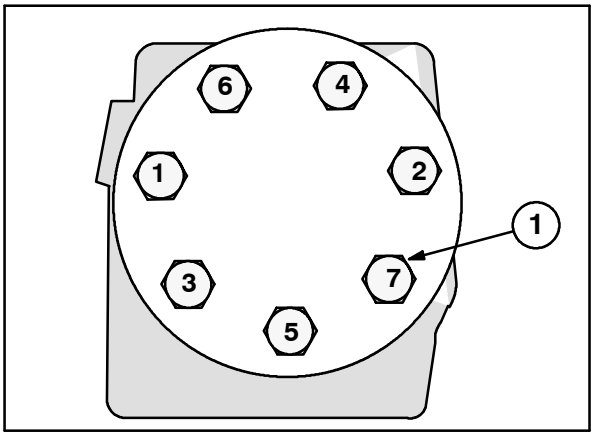

45

8. After the relief valve has been correctly set re-install the steering motor onto the mounting bracket and tighten the securing bolts to a torque value of 10–15 lbf ft(13–20Nm).

9. Reconnect the steering hoses, tighten to a torque value of 10–15 lbf ft (13–20Nm).

10. Purge the air from the system by operating the steering system from lock to lock until the system functions correctly.

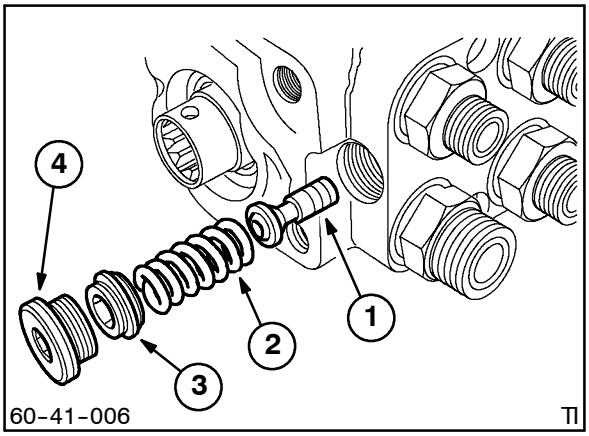

46

STEERING COLUMN REMOVAL and INSTALLATION

NOTE: *The component parts of the steering column as listed are serviced separately.*

Removal

1. Remove the steering wheel, if required.
2. Remove the lower steering column cover complete with multi-function switches.
3. Remove the upper steering column cover.
4. Remove the instrument console side panels.
5. Remove the four securing bolts securing the column to the frame, Figure 47.
6. Lift the column clear of the steering shaft and clear of the instrument console, Figure 48.
7. Remove the pin from the spacer at the bottom of the column and remove the steering shaft and spacer, Figure 49.

Inspection

1. Inspect the steering shaft universal joint and lower rubber coupling. Replace if any free play is evident.
2. Inspect the column assembly, if damaged or the bushes are worn a new assembly will be required.

Installation

1. Place spacer and steering shaft onto the steering motor and install pin.
2. Carefully place the steering column through the instrument console and over the steering shaft, ensuring flat sides are aligned.
3. Replace the securing bolts at the top of the column. Tighten to 23 Nm (17 lbf.ft).
4. Refit the upper and lower column covers and shuttle switch if fitted.
5. Refit the instrument console panels.
6. Refit the steering wheel.

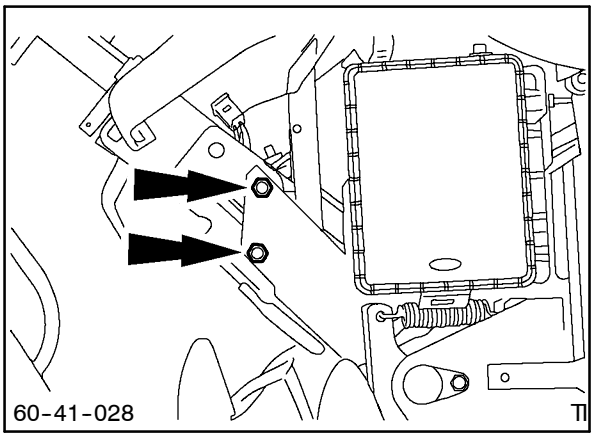

47

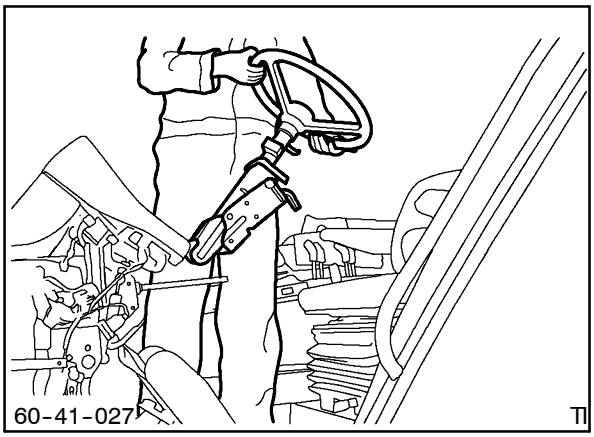

48

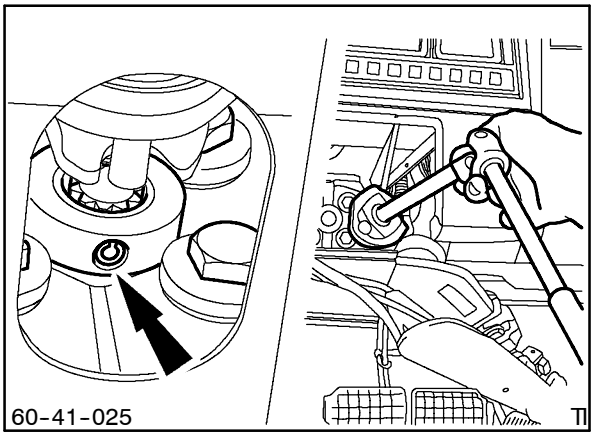

49

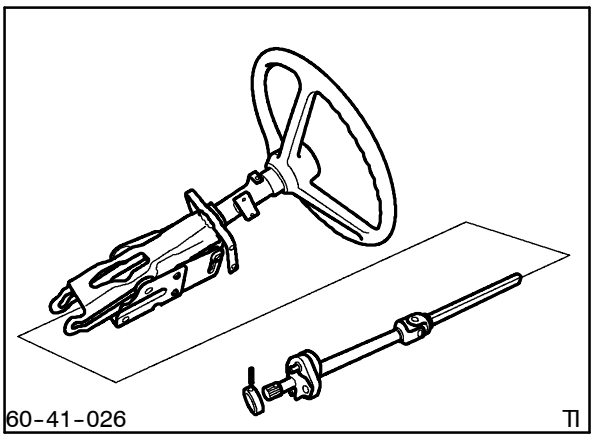

50

TWO WHEEL DRIVE STEERING CYLINDER – OVERHAUL

Removal

1. Stand the unit on a hard level surface and position the front wheel in the straight ahead position.

2. Disconnect flexible pipes, cap the open pipe ends.

NOTE: *Position of flexible pipes and orientation of connectors must be the same upon re-assembly.*

3. Remove retaining nuts (3) and separate ball joints (1) from track rod/axle (2), Figure 51

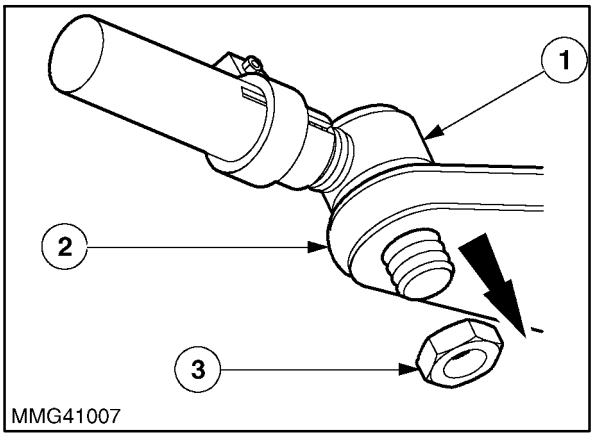

51

Disassembly

1. Drain the cylinder of all oil. Cap the ports.

2. Loosen the clamp bolts (1) and remove ball joint assemblies (2), Figure 52.

3. Install suitable fittings into the cylinder ports to enable the cylinder to be clamped in the jaws of a vice.

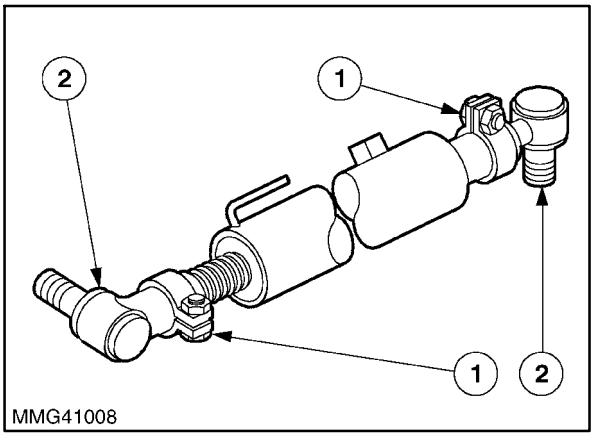

52

IMPORTANT: *Do not clamp directly around the cylinder barrel, as damage may occur.*

4. Using a 'C' spanner (2) unscrew the extension tube (1) and gland assembly, Figure 53

5. Withdraw gland and piston/rod assembly from the cylinder.

6. Remove all seals.

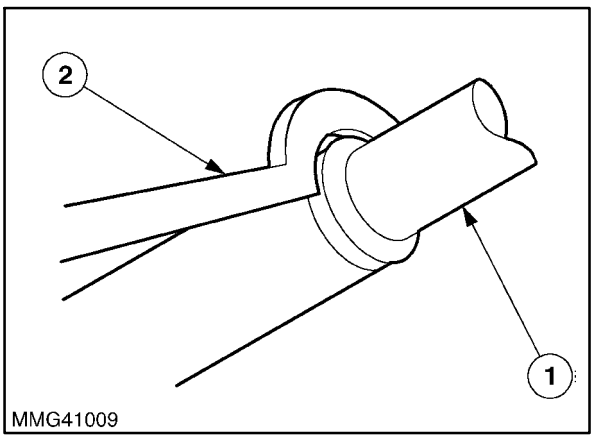

53

Inspection

1. Wash all components in a suitable solvent and air dry.

2. Inspect all parts for damage/wear. Minor nicks/burrs can be removed with an abrasive stone.

3. Inspect ball-joints for free play. Replace as necessary.

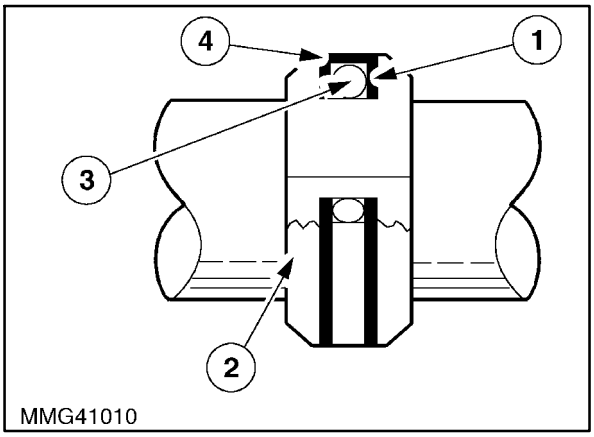

54

Re-Assembly

1. Install a new 'O' Ring (3), piston seal (4) and wear rings (1) onto the piston (2), Figure 54

2. Install new rod seals (3) in the glands (1), ensure sealing lip faces towards oil pressure. Install new back-up rings (5), 'O' rings (4) and rod wipers (2), Figure 55.

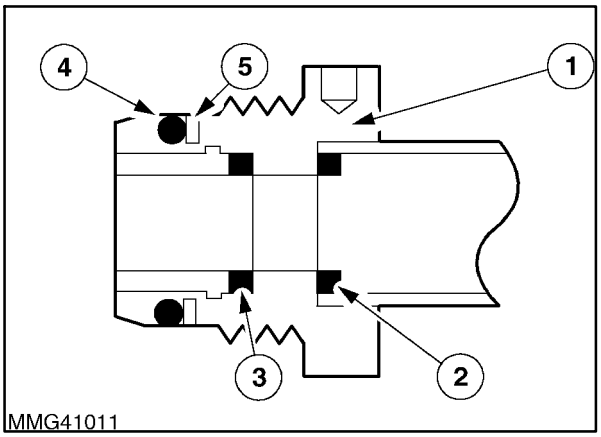

55

3. Lubricate seals and slide the gland assembly (2) onto the piston rod (1), Figure 56.

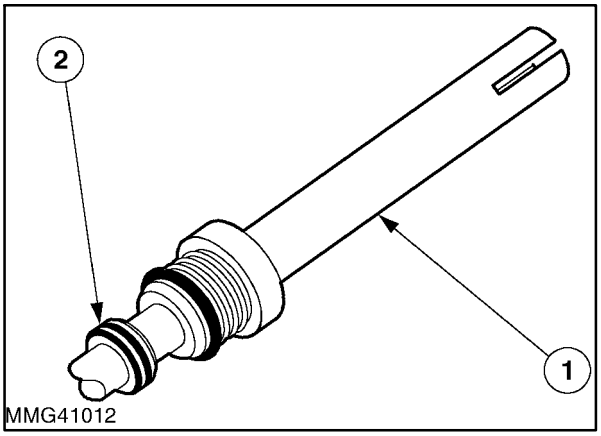

56

4. Place cylinder barrel (2) in a vertical position and insert the piston/rod (1) and gland assembly (3), Figure 57

NOTE: *Installation of the piston seal on top of the 'O' ring requires special care. Allow the seal to contract naturally before installing the piston and rod assembly into the cylinder.*

5. Screw gland into barrel until fully seated.

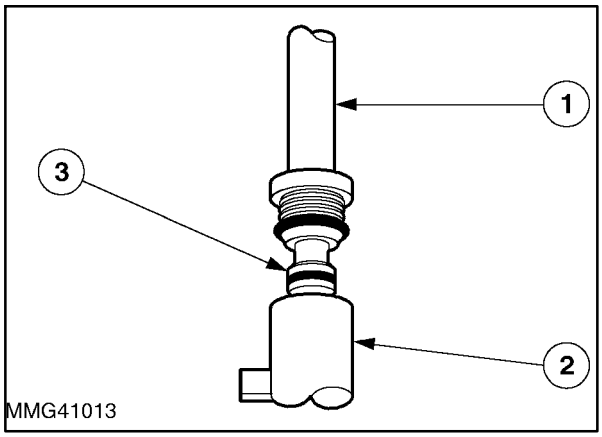

57

Installation

1. Installation of steering cylinder and track control rods is the removal procedure in reverse.

2. Screw anchor end ball joint into extension tube. Unscrew ball joint a fraction of a turn and ensure the connectors are positioned as, Figure 58. Tighten the clamp to 43.0 Nm (32.0 lbf.ft) 4.4 kgf m.

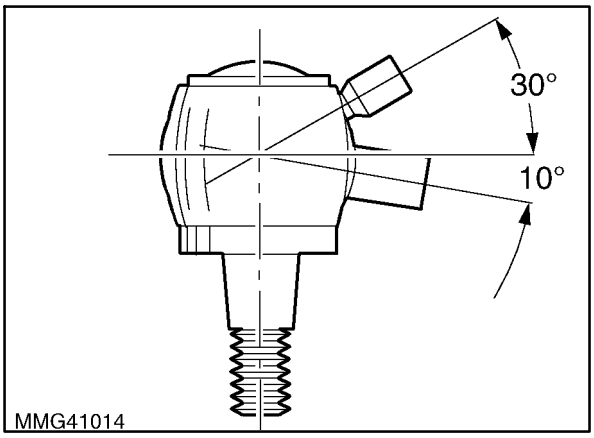

58

3. Compress the cylinder rod until the piston bottoms in the cylinder.

4. Assemble the anchor end ball joint to the track rod axle (2), Figure 59 and tighten to 176 Nm (130 lbf ft), 18.0 kgf m.

5. Position right hand wheel in the full right hand lock position.

6. Extend cylinder rod from the fully compressed position by 4.0 - 10.0 mm. (0.15 - 0.4 in).

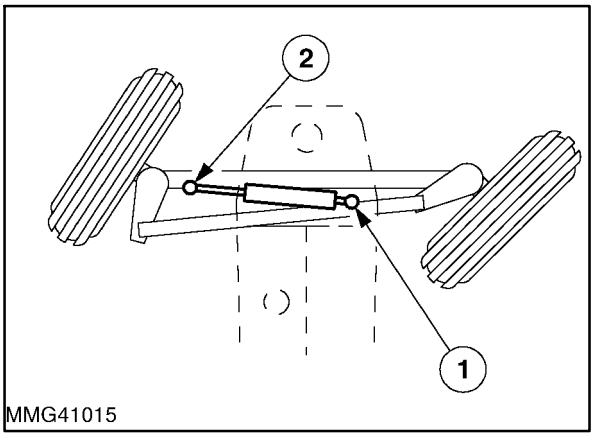

59

7. Adjust the piston rod ball joint to align with lug on tract rod. Install joint (1), Figure 59, and tighten to 173 Nm (130 lbf ft) 18.0 kgf m.

8. Position front wheels in the straight ahead position, adjust track rod to achieve a toe-out of 0 - 13.0 mm (0 - 0.5 in.) measured on the wheel rim at hub height (A minus B), Figure 60.

9. Purge the air from the system by starting the engine and turning the wheels from lock to lock several times. Repeat until steering operates correctly.

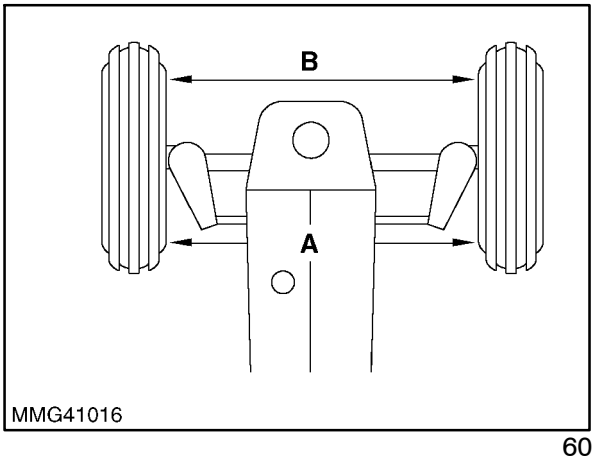

60

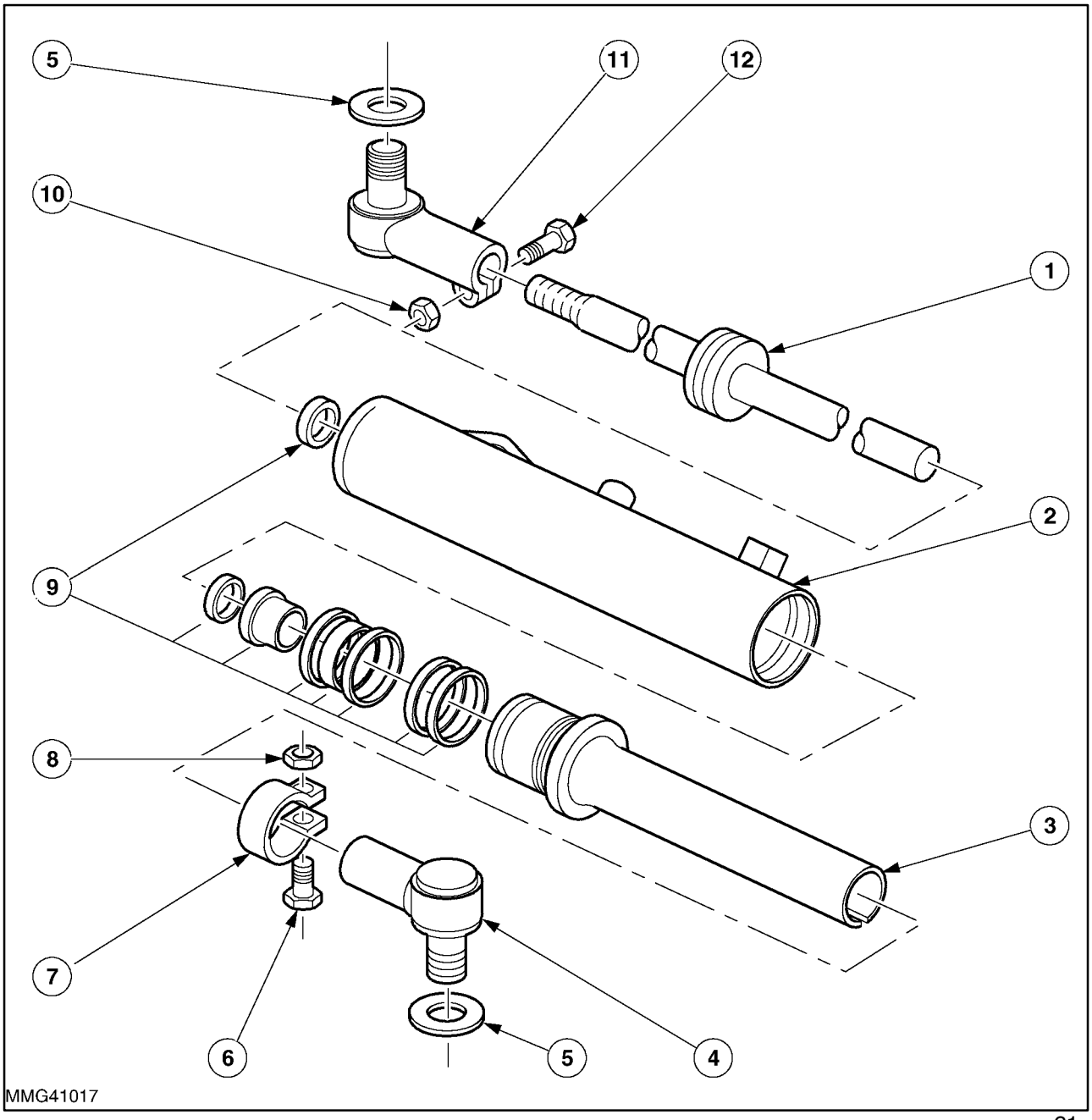

61

Steering Cylinder Assembly

1. Piston and Rod Assembly
2. Cylinder
3. Extension Tube
4. Track Rod End
5. Dust Washer
6. Clamp Bolt
7. Clamp
8. Nut
9. Seal Kit items*
10. Nut
11. Track rod end
12. Clamp Bolt

* Seal Kit Consists of:–
Rod Seals and Bushing
Piston Seals
Gland Seals

FOUR WHEEL DRIVE STEERING CYLINDERS – OVERHAUL

Removal and Installation

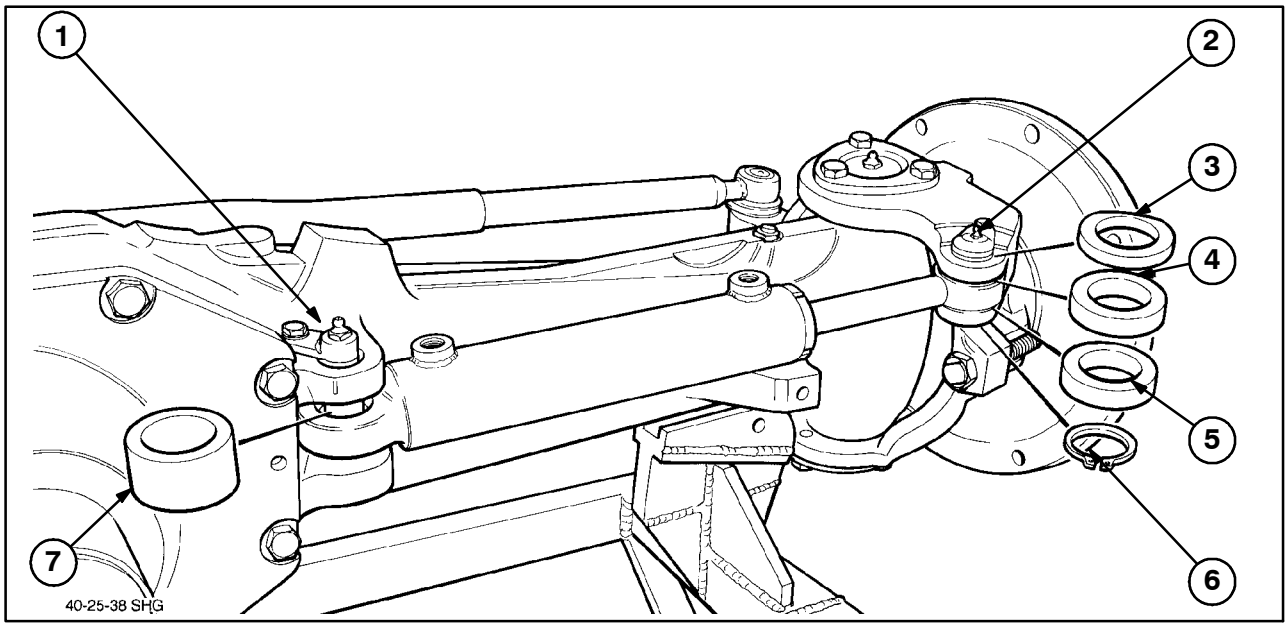

Steering Cylinder Installation – Four Wheel Drive 62

1. Pivot Pin
2. Pivot Pin
3. D Shaped Washer
4. Spacer
5. Circlip
6. Spacer
7. Spacer

1. Stand the unit on a hard level surface and position the front wheel in the straight ahead position.

2. Disconnect flexible pipes, cap the open pipe ends and remove hose clamps.

NOTE: *Position of flexible pipes and orientation of connectors must be the same upon re-assembly.*

3. Remove the snap ring retaining the steering arm to the cylinder piston pivot pin, item 6, Figure 62 and remove the pivot pin.

4. Remove the steering cylinder fixed end pivot pin retaining bolt and withdraw the pivot pin, item, 1, Figure 62. Remove the cylinder from the vehicle.

5. Installation is the reversal of the removal procedure

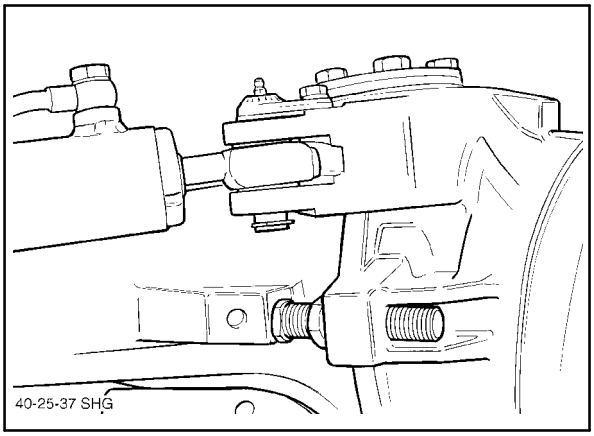

63

Steering Stop Adjustment

1. Turn the wheels to full lock and adjust steering stop to ensure tyres or mudguards do not touch the side of the tractor and that the steering cylinders have not reached the end of their travel

Steering Cylinder Overhaul – Four Wheel Drive

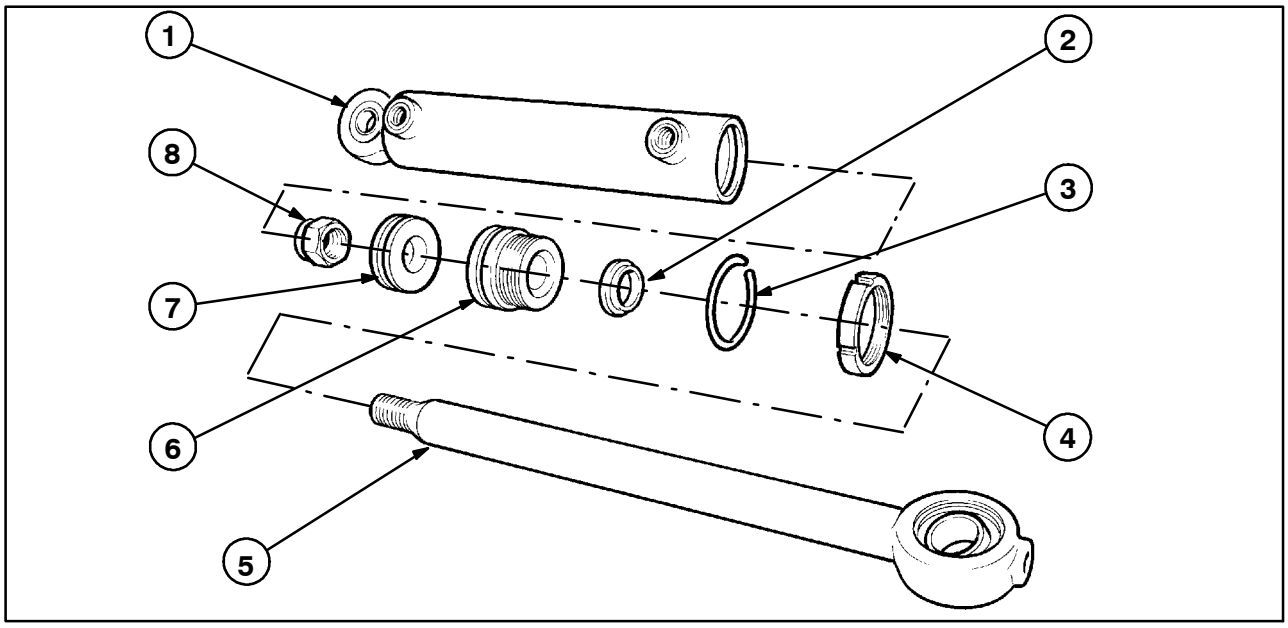

Steering Cylinder Assembly – Four Wheel Drive 64

1. Cylinder
2. Wiper Seal
3. Retaining Ring
4. Gland Nut
5. Cylinder Rod
6. Gland and Seal Assembly
7. Piston
8. Nut

1. Using appropriate 'C' spanner, unscrew and remove the gland nut.

2. Using a punch, push the steering cylinder gland into the cylinder and remove the wire locking ring.

3. Pull the rod and gland assembly from the cylinder.

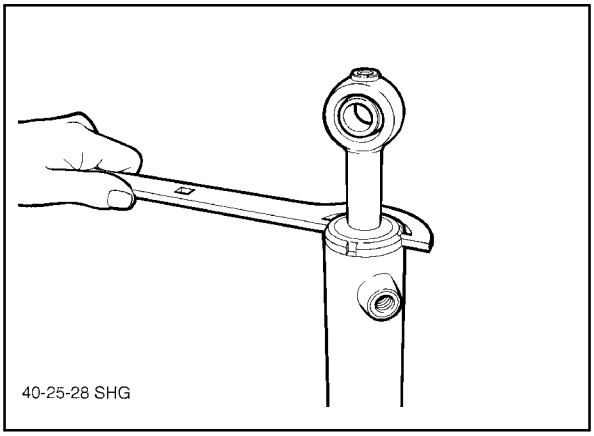

65

4. Remove the nut from the cylinder rod and disassemble to replace seals.

5. Inspect the bore of the cylinder and replace if scored.

6. Reassemble the cylinder in the reverse to disassembly, lubricating all components as assembled. Replace all seals supplied in the service seal kit.

NOTE: *The seal located in the centre of the gland is replaceable.*

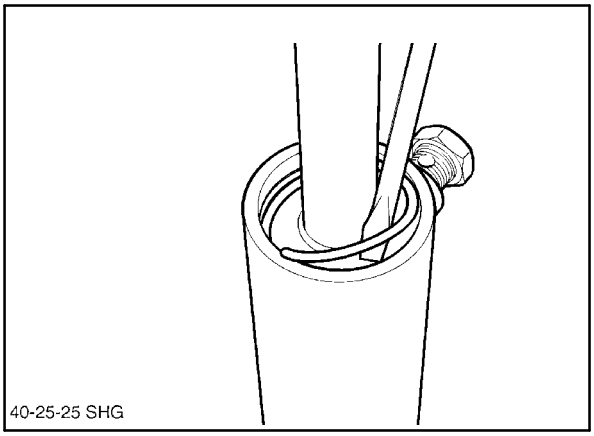

66

INDEX

Brake actuator and slave cylinder 5-8
Brake adjustment 5-11
Brake pedals and linkage 5-14
Braking system 5-2
Braking system component overhaul 5-7
Braking system description and operation .. 5-4
Four wheel braking 5-6
Four wheel drive steering cylinders 5-38
Handbrake assembly 5-12
Hydrostatic steering system 5-16
Master cylinder 5-7
Parking brake assembly 5-13
Rear brake assemblies 5-4
Special tools, braking system 5-3
Special tools, steering system 5-17
Steering 5-16
Steering column 5-33
Steering motor 5-25
Steering system description and operation . 5-18
Steering system testing 5-22
System bleeding 5-10
Torques, braking system 5-3
Torques, steering system 5-17
Troubleshooting, braking system 5-6
Troubleshooting, steering system 5-21
Two wheel drive steering cylinder 5-34

SECTION 6
POWER TRAIN
CONTENTS

CLUTCHES 6-2

TRANSMISSION SYSTEMS 6-15

16 X 16 ELECTROSHIFT TRANSMISSION 6-15

16 X 16 ELECTROSHIFT POWER SHUTTLE TRANSMISSION 6-111

12 X 12 TRANSMISSION 6-203

8 X 2 TRANSMISSION 6-239

16 X 4 DUAL COMMAND TRANSMISSION 6-265

REDUCTION GEARBOX ASSEMBLY 6-285

24 X 24 DUAL COMMAND TRANSMISSION 6-295

FRONT AXLE 6-375

FOUR WHEEL DRIVE AXLE TRANSFER BOX TRACTORS WITH 8 X 2 AND 16 X 4 TRANSMISSION 6-375

MECHANICAL REAR WHEEL DRIVE 6-389

INDEX 6-421

CLUTCHES

SPECIFICATIONS, TIGHTENING TORQUES AND SPECIAL TOOLS

SPECIFICATIONS

Components	
Disc Assembly Type	13in (330 mm) Single Disc Dry Plate
Material	Organic Non Asbestos
Pressure Plate Assembly Type	Belleville (diaphragm) Spring (Self Adjusting - No Maintenance)
Release Bearing Type	Mechanically Operated with 8x2 (16x4) Transmissions Hydraulically Operated with 12x12 Transmission
Clutch Pedal Free Play Adjustment - (Mechanically Operated Clutch Only)	1.1 - 1.6 in (28 - 41 mm)
Transmission Input Shaft Lubricant	Lithium and molybdenum disulphide grease GR75MD
Hydraulic Clutch oil	(NH 160 A)
Master Cylinder Push Rod to Plunger Clearance	0.6 mm (0.024 in) Minimum

TIGHTENING TORQUES

Components	lbf.ft	Nm
Clutch Cover to Flywheel Bolts	26	35
Clutch Pedal Operating Rod Turnbuckle Locknut	25	34
P.T.O. Drive Plate Bolts	95	129
Cross shaft Release Bearing fork Retaining Bolt	35	47
Hydraulic Slave Cylinder Retaining Bolts	18	25
Master Cylinder Retaining Bolts	17	23
Hydraulic Tube Connections	16	22

SPECIAL TOOLS

Description	V.L. Churchill Ltd Tools	Nuday Tools
Clutch Friction Disc Locator	FT.7102 (SW.14)	1262 (SW.509)
Bushing Kit	818	9514 (818)
Puller	1002	9198 (1002)
Puller Attachment	951	9190 (951)
Puller	943	9507 (943)
Slide Hammer	943S	9567 (943S)
Step Plate Adaptor	630-12	-

FAULT FINDING

PROBLEM	POSSIBLE CAUSES	REMEDY
No drive when gear selected and clutch pedal released	1. Rear axle or transmission faulty	1. Engage differential lock. If tractor drives, fault indicated from output of differential unit. If still no drive, possible transmission or rear axle fault. **Note:** If FWD fitted, engage FWD, if tractor drives, transmission O.K.
	2. Clutch incorrectly adjusted (mechanical)	1. Adjust clutch
	3. Clutch bearing not releasing	1. a). Inspect linkage (mechanical) b). Pedal not releasing fully on hydraulic system, keeping bearing engaged. c). Fault in master or slave cylinders.
	4. Friction disc completely worn	1. Replace friction disc
	5. Pressure plate faulty	1. Repair or replace pressure plate

PROBLEM	POSSIBLE CAUSES	REMEDY
Engine speed increases without a corresponding rise in road speed, clutch pedal released.	1. Clutch friction disc slipping	1. Check clutch adjustment 2. Worn friction disc 3. Pressure plate faulty 4. a). Release bearing of hydraulic clutch not fully releasing, check that pedal to master cylinder rod has some free play b). Master or slave cylinder faulty
Difficulty engaging gears	1. Clutch Dragging (not fully disengaging)	1. Check clutch adjustment 2. Worn friction disc 3. Faulty pressure plate 4. On hydraulic systems: a). Air in system, bleed system b). Faulty seals in either master or slave cylinder
Impossible to engage gears, engine stalls when tractor halted, clutch pedal depressed	1. Clutch not disengaging	1. Check clutch adjustment 2. Linkage disconnected / faulty (mechanical) 3. No / low oil (hydraulic system) 4. Faulty seals in master or slave cylinder (hydraulic) 5. Clutch disc seized onto flywheel, pressure plate or input shaft splines 6. Pressure plate faulty, repair or replace as necessary
Noise from transmission bell housing, noise changes when pedal is depressed and released	1. Release bearing worn 2. Clutch pilot bearing worn	1. Replace release bearing 2. Replace pilot bearing
Clutch fails to engage smoothly	1. Defective clutch friction disc 2. Defective pressure plate 3. Worn clutch pilot bearing 4. Defective flywheel	1. Replace friction disc 2. Replace pressure plate 3. Replace pilot bearing 4. Inspect flywheel as detailed in the Engine Section

DESCRIPTION AND OPERATION

The TS range of tractors utilises two methods of clutch operation.

The clutch system of the 12x12 transmission is a hydraulically operated single plate clutch with a 13 in. (330 mm) non asbestos dry friction disc, designed for high durability and low effort operation. The clutch is conventionally located at the front of the transmission, connecting the engine to the transmission input shaft. The hydraulic actuation is provided with a simple master/slave cylinder arrangement. This provides self adjustment of the clutch system to maintain optimum clutch performance. The pressure plate is a diaphragm spring type also self adjusting and requiring no maintenance.

The clutch system of the 8x2 non synchromesh transmission is a mechanically operated system with a single non asbestos dry friction disc clutch plate of 13 in. (330 mm) diameter. The pressure plate is of the same diaphragm spring type used in the 12x12 transmission.

The 16x16 transmission does not use a conventional clutch arrangement. Engine power is transmitted to the transmission via a damper assembly attached to the engine flywheel. The function and operation of the clutch pedal is described in detail in the 16 × 16 Section.

Operation

The principle of clutch operation is the same whether the clutch is Hydraulically or mechanically operated.

In the clutch 'engaged' position the spring loaded pressure plate forces the clutch disc into contact with the engine flywheel.

The frictional contact between the clutch disc material and the surfaces of the flywheel and pressure plate enables drive from the flywheel to be transmitted via the clutch disc to the input shaft of the transmission.

A clutch operating pedal is either connected mechanically, by a rod and lever, or hydraulically to a release bearing. The release bearing contacts the operating fingers of the pressure plate.

Depression of the clutch pedal causes the release bearing to move forward and depress the pressure plate diaphragm, thus drawing the pressure plate away from the clutch disc and releasing the disc from contact with the flywheel. The frictional drive from the engine to the transmission is thereby disconnected.

When the clutch pedal is released a spring returns the pedal to its free position and the release bearing is drawn away from the release levers of the pressure plate assembly.

The main springs of the pressure plate assembly then re-assert pressure on the pressure plate moving it towards the friction disc and into contact with the flywheel, re-establishing the drive between engine and gearbox.

CLUTCH ADJUSTMENT

The only clutch adjustment required is to check and, if necessary, adjust the clutch pedal free travel. This is the amount of pedal movement from the fully released position to the point where resistance is first encountered. This adjustment is only required on the mechanically operated clutch system.

ADJUSTMENT PROCEDURE:

With reference to Figure 1.

The clutch free travel should be
28 - 41 mm (1.1 - 1.6 in.) at the clutch pedal.

If adjustment is required, loosen the locknut, (1) remove the split pin (4) and clevis pin (3). Turn the clevis (2) to lengthen or shorten the operating rod, as required. Secure the clevis pin (3) with a new split pin (4) and tighten the locknut (1).

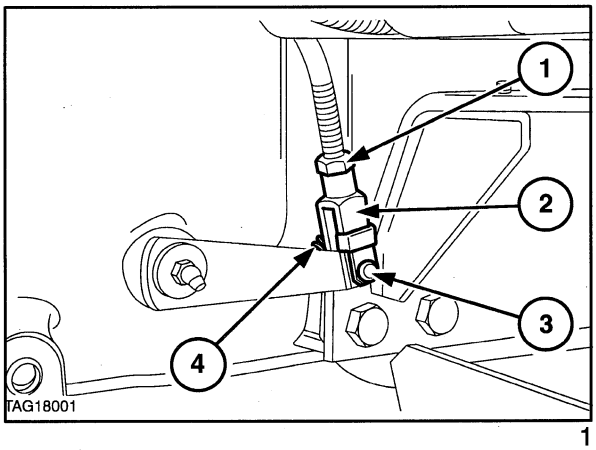

1

CLUTCH OVERHAUL - MECHANICAL OPERATION

REMOVAL

1. Separate the tractor between the engine and transmission.
2. Remove the bolts securing the clutch pressure plate and cover assembly to the flywheel and remove the pressure plate assembly together with the clutch disc.

NOTE: *The bolts must be slackened evenly and diagonally across the clutch to prevent distortion of the cover assembly.*

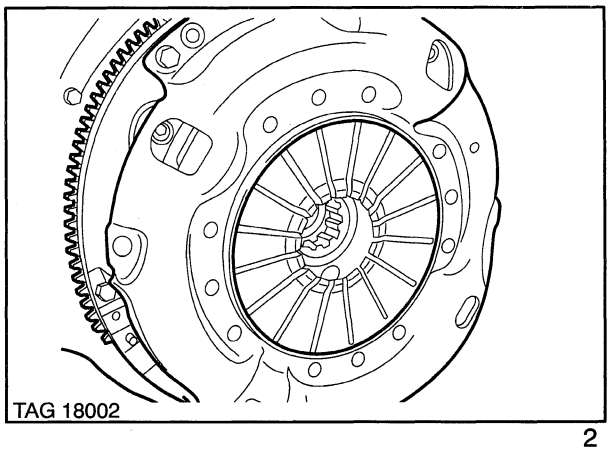

2

3. Remove the clutch release fork retaining bolt, (3) Figure 3, and withdraw the clutch release shaft (4) from the casing. Remove the clutch release fork (2) from the transmission. Slide the clutch release bearing (1) and hub from the clutch release hub support.

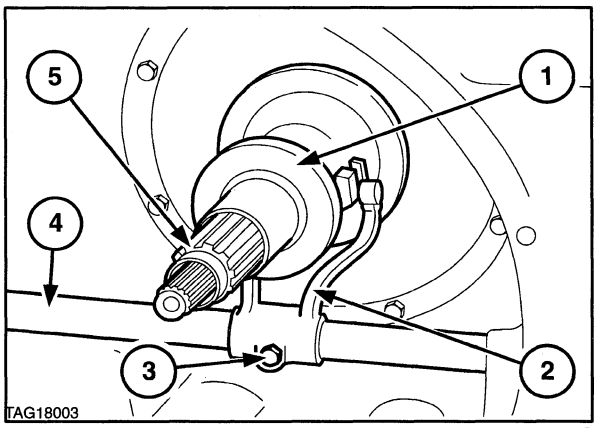

3

4. To remove the clutch pedal (2), carefully lever off the pedal return spring (1), remove the clutch pedal shaft retaining snap ring, withdraw the shaft (6) and pull the pedal (2) from the tractor.

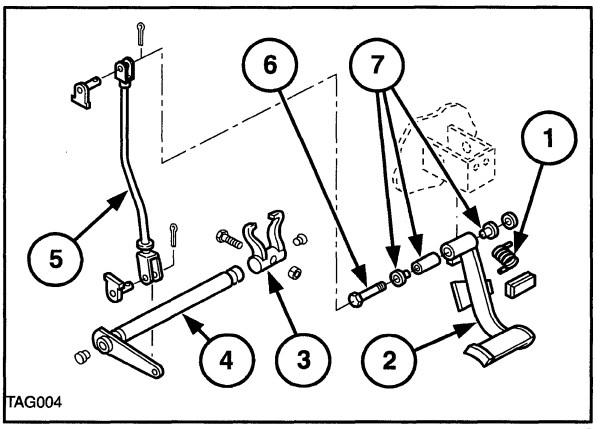

4

INSPECTION AND REPAIR

Friction Disc

1. Inspect the clutch disc to ensure the linings are not loose, cracked, worn or contaminated with oil. Check the rivets are secure. If signs of overheating due to clutch slippage or excessive wear are evident, the disc must be discarded and a new one installed.

IMPORTANT: *Investigate the source of any oil or grease on the facings and rectify before installing a new disc.*

Pressure Plate

2. Examine the pressure plate assembly, ensure the diaphragm fingers are all at the same height, there is no discolouration due to excessive heat and that the assembly operates smoothly. Check the face of the pressure plate for cracks, scoring or distortion. Discard the pressure plate if any faults are found.

NOTE: *The diaphragm type clutch has no serviceable components. A new assembly will be required if any faults are found during inspection.*

Release Bearing

3. Examine the release bearing assembly, ensure the bearing hub moves freely over the transmission hub carrier. Ensure the bearing rotates smoothly and the face of the bearing is not damaged or worn. Examine the clutch release fork, ensure the fork is not cracked or bent, i.e, the fork ends align and that the ends are not worn. Discard and replace any worn or damaged parts.
   Use puller attachment, Tool No. 951 (3), puller Tool No. 1002 (1) and a suitable step plate (4) to separate the release bearing from the hub (2) if necessary to renew either component, Figure 5.

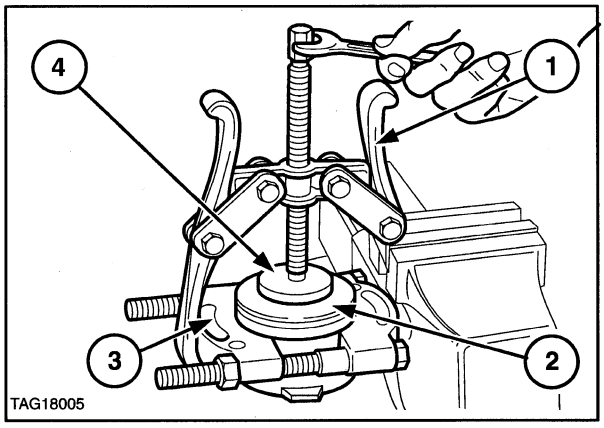

5

Clutch Pedal

4. Inspect the clutch pedal ensuring there are no cracks in the pedal assembly and there is no excessive free play between the bushes and pedal shaft when installed in the pedal. Discard and replace any worn or damaged parts.

Clutch Release Cross Shaft

5. Inspect the clutch release cross shaft and transmission housing bushes. The shaft should rotate smoothly in the bushes without any free play between the bushes and shaft. If the bushes are worn or damaged remove and replace using bushing kit, Tool No. 818.

INSTALLATION

IMPORTANT: *When installing a new pressure plate assembly, the pressure plate friction face must be wiped clean with white spirit to remove the protective coating.*

1. Lightly lubricate the hub splines of the transmission input shaft with a suitable non-fibrous lithium base grease.

2. Position the clutch disc on the flywheel with the marked face and damper springs towards the flywheel, use locator, Tool No. SW 14, to centralise the disc.

3. Locate the pressure plate assembly onto the flywheel and tighten the retaining bolts to a torque of 35 Nm (26 lbf.ft).

4. Remove the locator tool from the clutch disc.

5. Installation of the clutch release bearing follows the removal procedure in reverse, observing the following requirements:

- Lubricate the hub bore with a high melting point grease.

- Tighten the release shaft fork pinch bolt to 47 Nm (35 lbf.ft).

- After installation ensure the release bearing assembly operates correctly when the clutch pedal is depressed and released.

6. Reconnect the engine to the transmission assembly as described in the Repair Manual.

7. Check and adjust the clutch pedal free play as previously described in this Chapter.

CLUTCH PILOT BEARING

A pre-lubricated ball bearing assembly is installed at the rear end of the engine crankshaft, within the flywheel. The bearing is located in the PTO drive plate.

OVERHAUL

Removal

1. Remove the clutch as described in either Section D or E.
2. Use slide hammer, Tool No. 943-S (2) and puller, Tool No. 943 (1) to remove the PTO drive plate bearing (3) as shown in Figure 6.

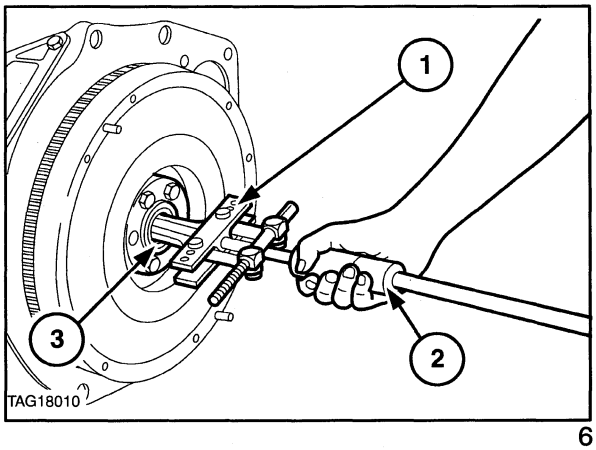

6

Installation

1. Lightly tap the bearing, shield side facing outwards, into the PTO drive plate.
2. Use Step Plate Adaptor, Tool No. 630-12 (1), to fully install the bearing (3) into the flywheel (2) as shown in Figure 7.

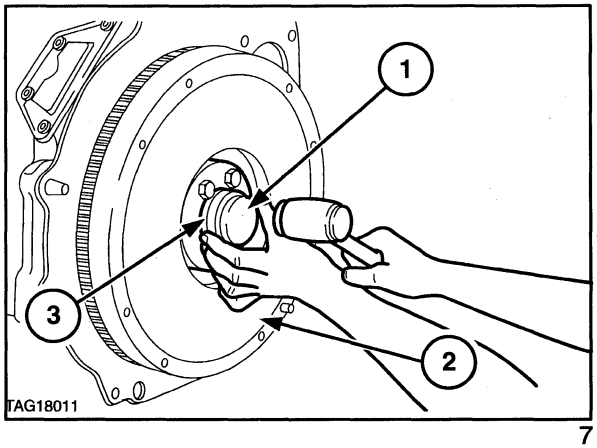

7

CLUTCH OVERHAUL - HYDRAULIC OPERATION

REMOVAL

1. Separate the tractor between the engine and transmission, refer to the section, 'SEPARATING THE TRACTOR'.

2. Remove the bolts securing the clutch pressure plate and cover assembly to the flywheel and remove the pressure plate assembly together with the clutch disc.

NOTE: *The bolts must be slackened evenly and diagonally across the clutch to prevent distortion of the cover assembly.*

3. At the front of the transmission, remove the two tubes (2) from the hydraulic release bearing (1), Figure 9. Remove the three bolts securing the release bearing assembly to the transmission front plate and withdraw the release bearing assembly.

4. To remove the clutch pedal, remove the left hand side panel from the instrument console and disconnect the rod to the master cylinder. Carefully lever off the pedal return spring, remove the clutch pedal shaft retaining snap ring, withdraw the shaft and pull the pedal from the tractor.

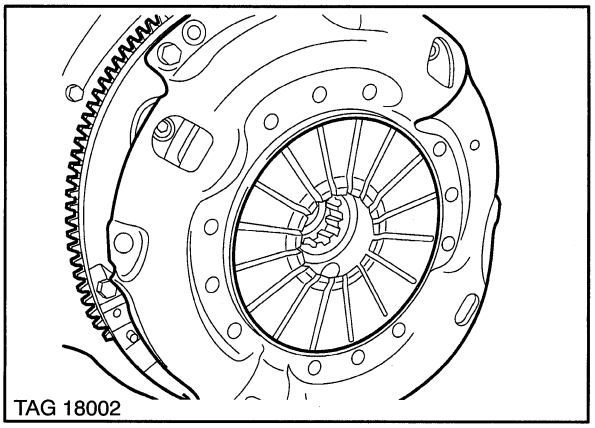

8

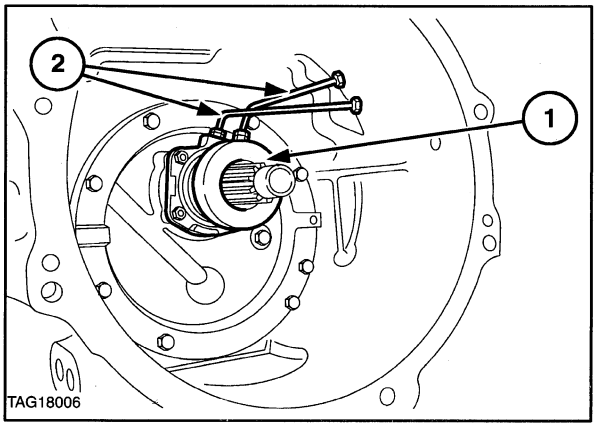

9

INSPECTION AND REPAIR

Friction Disc

1. Inspect the clutch disc to ensure the linings are not loose, cracked, worn or contaminated with oil. Check that the rivets are secure. If signs of overheating due to clutch slippage or excessive wear are evident, the disc must be discarded and a new one installed.

IMPORTANT: *Investigate the source of any oil or grease on the facings and rectify before installing a new disc.*

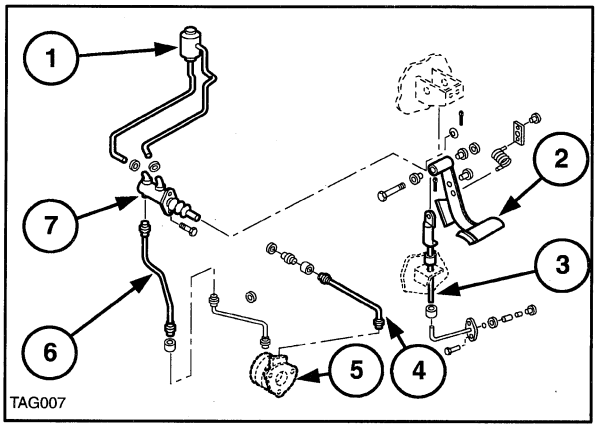

Clutch Components - Hydraulic Operation 10

1. Hydraulic Oil Reservoir
2. Clutch Pedal
3. Interlock Cable
4. Slave Cylinder Bleed Tube
5. Slave Cylinder Assembly
6. Slave Cylinder Oil Supply Tube
7. Master Cylinder

Pressure Plate

1. Examine the pressure plate assembly, ensure the diaphragm fingers are all at the same height, there is no discolouration due to excessive heat and that the assembly operates smoothly. Check the face of the pressure plate for cracks, scoring or distortion. Discard the pressure plate if any faults are found.

NOTE: *The diaphragm type clutch has no serviceable components. A new assembly will be required if any faults are found during inspection.*

Hydraulic Release Bearing / Slave Cylinder Assembly

1. Inspect the release bearing for the following, oil leakage, weak or broken return spring and wear or damage to the release bearing. Repair kits are available should seals or the bearing assembly require servicing.

Hydraulic Release Bearing / Slave Cylinder Assembly Overhaul.

With reference to Figure 11

1. Remove bearing retaining snap ring, item 4, and withdraw the bearing assembly.

2. Carefully pry the bearing cage claws open and withdraw the piston assembly.

3. Remove the snap ring from the rear of the housing and withdraw the guide sleeve

4. In the dismantled condition it is wise to replace the seals with new items as a precautionary measure against future failure. Inspect the remaining components for wear or damage and replace as necessary.

5. Reassembly is the reversal of the disassembly. Coat all seals with clean brake oil of the correct specification as they are installed and assembled.

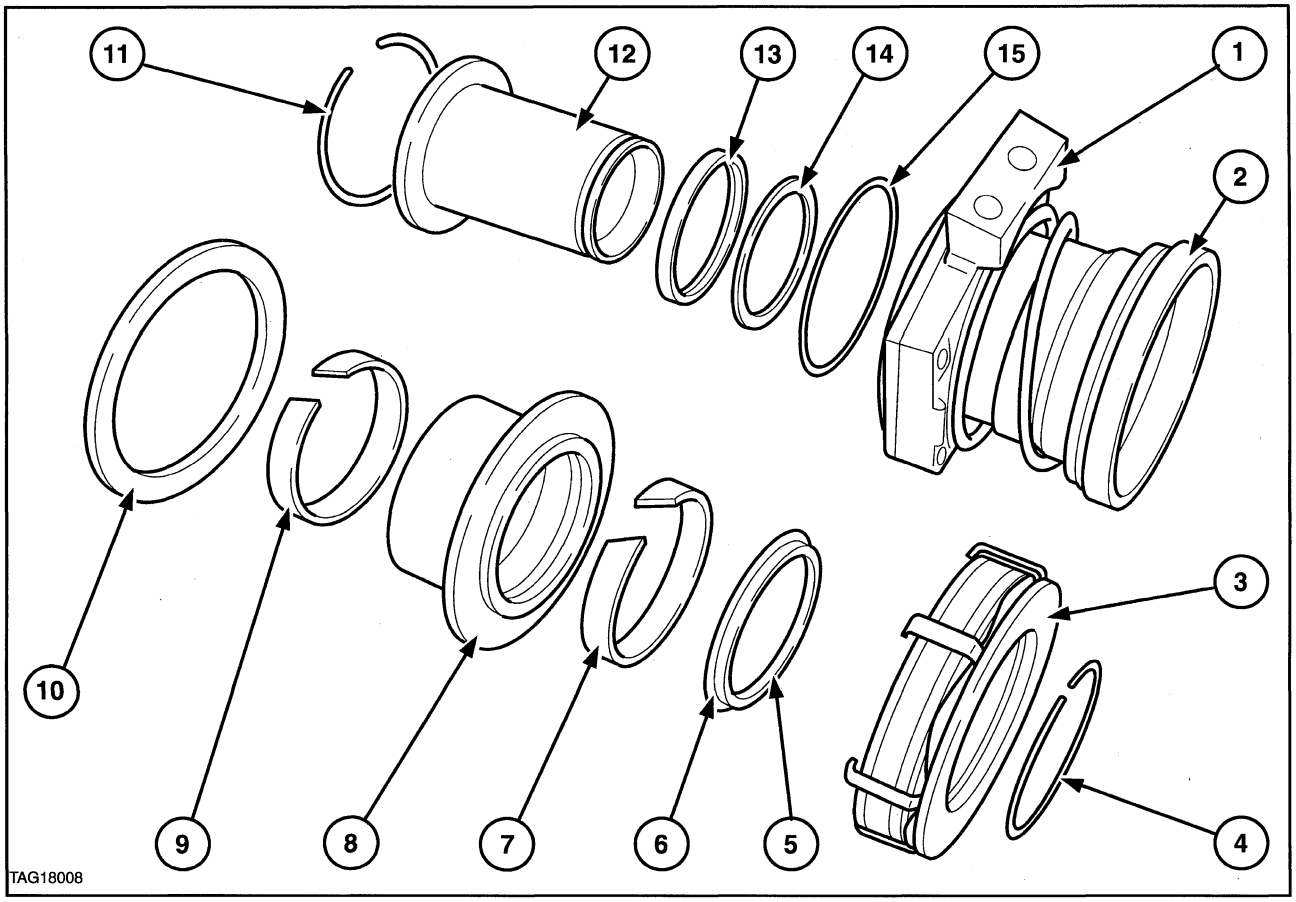

Release Bearing / Slave Cylinder Assembly 11

1. Housing
2. Protective Cap Assembly
3. Bearing Assembly
4. Snap Ring
5. Wiper Seal
6. 'O' Ring
7. Guide Ring
8. Piston
9. Guide Ring
10. Seal Ring
11. Snap Ring
12. Guide Sleeve
13. Seal
14. Back Up Seal
15. 'O' Ring

Master Cylinder

1. Remove the left hand instrument panel side cover, if not previously removed.

2. Disconnect the two hoses from the reservoir and plug to prevent excessive oil loss.

3. Disconnect the outlet tube to the slave cylinder and plug.

4. Disconnect the push rod from the clutch pedal.

5. Remove the two bolts securing the cylinder assembly to the tractor bulkhead and withdraw the cylinder.

6. Installation is the reversal of the removal procedure.

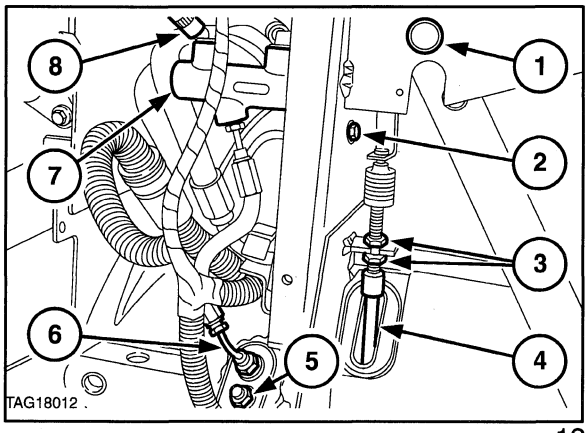

Clutch Components 12

1. Clutch Pedal Pin
2. Master Cylinder Retaining Nut
3. Cable Adjustment Nuts
4. Interlock Cable
5. Bleed Screw
6. Master Cylinder to Slave Cylinder Tube
7. Master Cylinder
8. Oil Supply from Reservoir

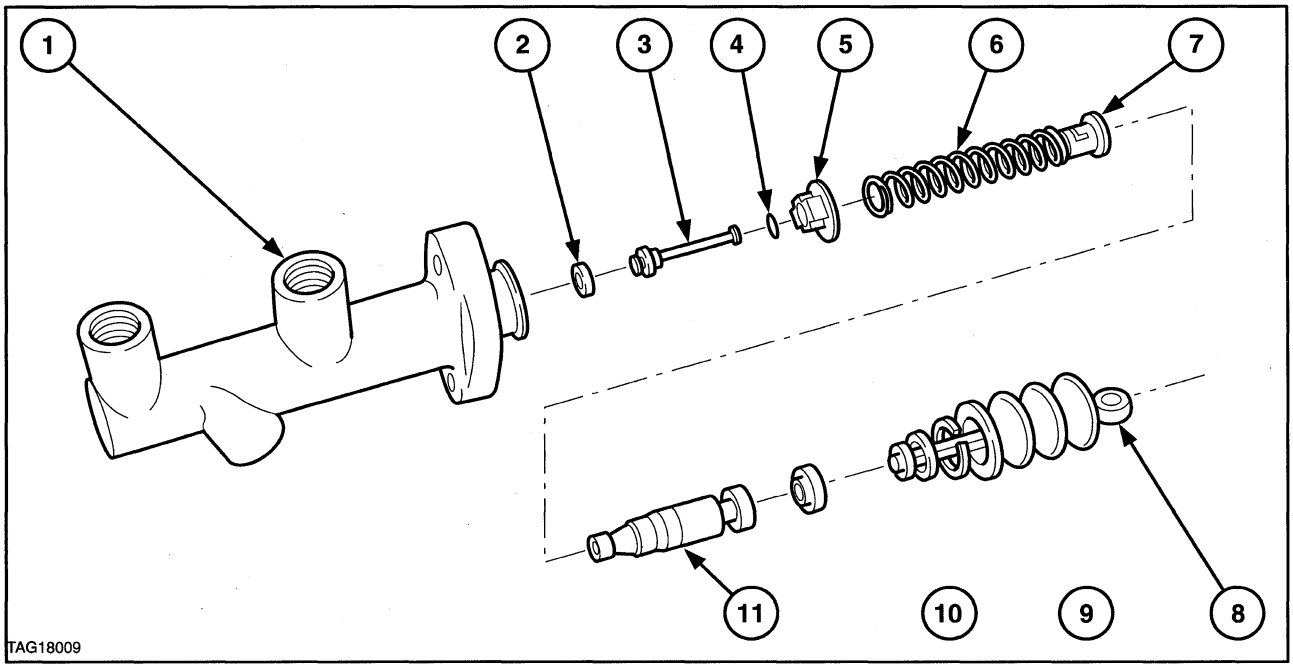

Master Cylinder - Exploded View 13

1. Master Cylinder Body
2. Valve Rubber Seal
3. Rod
4. Wavy Spring Washer
5. Nylon Holder
6. Spring
7. Retainer
8. Push Rod and Boot Assembly
9. Circlip
10. Gland Seal
11. Spool

Master Cylinder - Overhaul

Disassembly

1. Roll back push rod rubber boot, remove the circlip retaining the push rod and spool assembly.
2. Gently tap the cylinder, spool end downwards, onto a firm surface to remove the spool assembly.
3. Withdraw the oil inlet adaptors and carefully hook out the seals.
4. From the spool and spring assembly, bend back the locking tab of the retainer and withdraw the spring assembly. Unhook the rod and disassemble.

Inspection and Repair

1. Inspect the cylinder bore for wear, score marks or burrs. If the bore is not in perfect condition replace the cylinder assembly. Do not attempt to repair.
2. A seal kit is available in Service. When overhauling the master cylinder obtain a kit and replace **ALL** seals.
3. Coat all seals in clean brake oil prior to fitment.

IMPORTANT: *Use only the specified type of brake oil, Ambra brake LHM (NH610A). The oil used in this system is a 'Mineral' based oil. Use of a non specified oil will cause seal damage and a resultant failure.*

Reassembly

1. Reassembly is the reversal of the disassembly procedure.

System Bleeding

1. Ensure the reservoir is filled up to the maximum line with the specified brake oil.
2. Install a suitable rubber tube over the bleed screw. Immerse the tube into a jar of clean and correct specification brake oil. Position the jar above the bleed screw, this will prevent possible air ingress at the bleed screw.
3. Open the bleed screw and fully depress the clutch pedal, close the bleed screw with the pedal depressed and then release the pedal. Repeat this procedure until 'air free' oil is entering the jar.

NOTE: *Regularly inspect the oil level in the reservoir during bleeding. Do not allow it to empty.*

Clutch Pedal

1. Inspect the clutch pedal ensuring there are no cracks in the pedal assembly and that there is no excessive free play between the bushes and pedal shaft when installed in the pedal. Discard and replace any worn or damaged parts.

INSTALLATION

IMPORTANT: *When installing a new pressure plate assembly, the pressure plate friction face must be wiped clean with white spirit to remove the protective coating.*

1. Lightly lubricate the hub splines of the transmission input shaft with a suitable non-fibrous lithium base grease.
2. Position the clutch disc on the flywheel with the marked face and damper springs towards the flywheel, use locator, Tool No. SW 14, to centralise the disc.
3. Locate the pressure plate assembly onto the flywheel and tighten the retaining bolts to a torque of 35 Nm (26 lbf.ft).
4. Remove the locator tool from the clutch disc.
5. Installation of the clutch release bearing follows the removal procedure in reverse, observing the following requirements:

- Tighten the release bearing retaining bolts to 25 Nm(18 lbf.ft).
- Install the two hydraulic tubes and bleed the system of air as previously described.
- Check the operation of the slave cylinder. Push and hold the release bearing 'IN' by hand, obtain an assistant to depress and release the clutch pedal. The release bearing should be forced out with the pedal depressed and return 'IN' with the pedal released while still applying hand pressure.

6. Reconnect the engine to the transmission assembly as described in the Repair Manual.

TRANSMISSION SYSTEMS

16 × 16 Electroshift Transmsission

SPECIFICATIONS AND SPECIAL TOOLS

Transmission Type	16 forward and 16 reverse speeds using straight cut gears, four multi-plate wet powershift clutches, one forward reverse friction plate synchroniser and one main range friction cone synchroniser
Control System	Electro-hydraulic with electronic management System
Clutch Hydraulic Operating Pressure	18-20 bar (260-290 lbf.in^2) supplied from the CCLS Hydraulic Piston Pump
Hydraulic Control Valve	
Type	Separate Casting, multi spool with internal cast-in galleries
Control	By electrically operated solenoid coils signalled by electronic management System
Hydraulic Accumulator	
Type	Diaphragm type, nitrogen charged with 0.7 litre hydraulic oil capacity
Charge Pressure	10 bar (145 lbf.in^2)
Multi-Plate Wet Clutches	
Type	Constant running, pressure lubricated, pressure applied, spring released
C1 and C2 clutches	
Number of Friction Plates	4 in each clutch
Number of Steel Plates	4 in each clutch
C3 and C4 clutches	
Number of Friction Plates	8 in each clutch
Number of Steel Plates	8 in each clutch
Number of Belleville Washers	4 pairs in each clutch
Belleville washer stack height	24 mm
Pressure Lubrication	Maximum 7 bar (100 lbf.in^2) supplied by the steering gear pump

Lubricant Capacity Transmission/Rear Axle	U.S. Gallons 16.0 Imp. Gallons 13.3 Litres 60.6	
Lubricant	134 D (NH 410 B)	
Lubricant operating temperature	65°C (150°F)	
Output Shaft Component End Float	0.004-0.012 in.	(0.10-0.30 mm)
Output Shaft 'D' Shaped Shim Washer Sizes	0.079-0.080 in. 0.085-0.086 in. 0.091-0.092 in. 0.097-0.098 in. 0.102-0.104 in.	(2.00-2.04 mm) (2.15-2.19 mm) (2.30-2.34 mm) (2.45-2.49 mm) (2.60-2.64 mm)

C3 Clutch Output Shaft to Transmission Rear Buckle Up Face:

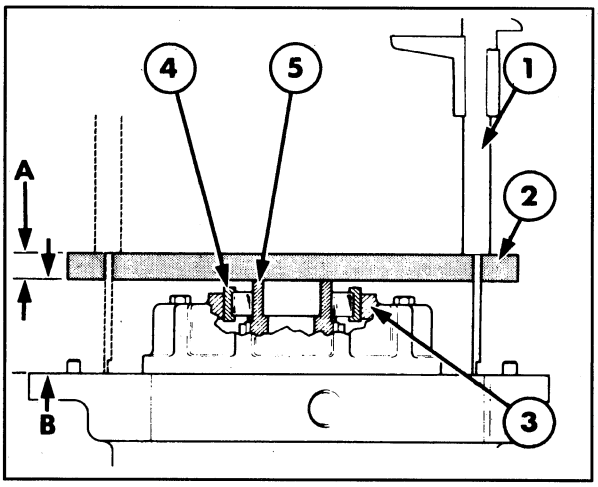

Calculated Distance 'B' (mm)	Washer Thickness Required (mm)
58.82-59.15	6.20-6.25
59.16-59.40	5.95-6.00
59.41-59.65	5.70-5.75
59.66-59.90	5.45-5.50
59.91-60.17	5.20-5.25
60.18-60.52	4.85-4.90

Synchroniser Wear Check

Main Synchroniser

Minimum Gap Between Friction and Outer Cone	0.032 in	0.8 mm

High-Low Range Synchroniser

Minimum Gap Between	0.060 in	1.50 mm
Clutch 3 and 4 Piston Travel	0.10-0.12 in	2.50-3.05 mm
Clutch 3 and 4 Separator Plate Thickness	0.089-0.091 in 0.109-0.114 in	2.26-2.3 mm 2.76-2.8 mm

Forward/Reverse and Range Synchroniser

Support Shaft Running Clearance	0.016-0.024 in	0.40-0.60 mm

Forward/Reverse Synchroniser Support Front

Bearing Retainer Plate Shim Sizes:	F0NN-7Z478-AA	0.040 in.	1.00 mm
	F0NN-7Z478-BA	0.012 in.	0.30 mm
	F0NN-7Z478-CA	0.004 in.	0.10 mm
	F0NN-7Z478-DA	0.002 in.	0.05 mm

Gear Ratios
30 Km/hr Transmission

Gear	Forward Range	Transmission Ratio
1	Creeper	43.20
2	Creeper	35.36
3	Creeper	28.91
4	Creeper	23.66
5	Creeper	18.30
6	Creeper	14.98
7	Creeper	12.24
8	Creeper	10.02
1	L	8.51
2	L	6.97
3	L	5.69
4	L	4.66
5	L	3.30
6	L	2.95
7	L	2.41
8	L	1.97
1	H	2.74
2	H	2.25
3	H	1.84
4	H	1.50
5	H	1.16
6	H	0.95
7	H	0.78
8	H	0.64

	Reverse	
1	Creeper	43.60
2	Creeper	35.68
3	Creeper	29.17
4	Creeper	23.88
5	Creeper	18.46
6	Creeper	15.11
7	Creeper	12.36
8	Creeper	10.11
1	L	8.59
2	L	7.03
3	L	5.75
4	L	4.70
5	L	3.64
6	L	2.98
7	L	2.43
8	L	1.99
1	H	2.77
2	H	2.27
3	H	1.85
4	H	1.52
5	H	1.17
6	H	0.96
7	H	0.78
8	H	0.64

40 Km/hr Transmission

Gear	Forward Range	Transmission Ratio
1	Creeper	43.42
2	Creeper	35.36
3	Creeper	29.06
4	Creeper	23.66
5	Creeper	18.39
6	Creeper	14.98
7	Creeper	12.31
8	Creeper	10.02
1	L	8.55
2	L	6.97
3	L	5.72
4	L	4.66
5	L	3.62
6	L	2.95
7	L	2.42
8	L	1.97
1	H	2.08
2	H	1.69
3	H	1.39
4	H	1.13
5	H	0.88
6	H	0.72
7	H	0.59
8	H	0.48

	Reverse	
1	Creeper	43.82
2	Creeper	35.68
3	Creeper	29.32
4	Creeper	23.88
5	Creeper	18.55
6	Creeper	15.11
7	Creeper	12.42
8	Creeper	10.11
1	L	8.63
2	L	7.03
3	L	5.78
4	L	4.70
5	L	3.66
6	L	2.98
7	L	2.45
8	L	1.99
1	H	2.10
2	H	1.71
3	H	1.40
4	H	1.14
5	H	0.89
6	H	0.72
7	H	0.59
8	H	0.48

Low Pressure Hydraulic Circuit Pressure Regulating Valve	18-20 bar (260-290 lbf/in^2)
Low Transmission Oil Pressure Switch	Closes @ 210-220 lbf/in^2 (14.5-15.2 bar) transmission oil pressure warning light comes 'On' Opens @ 240-250 lbf/in^2 (16.5-17.2 bar) transmission oil pressure warning light goes 'Off'
Maximum Operating Pressure	Low pressure circuit safety valve operates 400-415 lbf/in^2 (27.6-28.6 bars)

THREAD SEALANT

Thread Sealant	New Holland Thread Seal 82995768	
Gasket Sealant	New Holland Flexible Sealant	82995770 (50 ml) 82995771 (300 ml)

SPECIAL TOOLS

DESCRIPTION	TOOL NUMBER (V.L. Churchill Ltd.)	TOOL NUMBER (FNH-A No.)
16 x 16 Transmission Overhaul Kit Comprising of:-	4FT500	FNH-00865
Handle (for use with resizer tool)	4FT501	FNH-00866
Tapered Sleeve, C3/C4 Piston Seal Expander	4FT502	FNH-00867
Tapered Sleeve, C1/C2 Piston Seal Expander	4FT503	FNH-00868
Piston Installer (Pusher)	4FT504	–
Tapered Sleeve C3/C4 Piston Seal Installer	4FT505	FNH-00869
Tapered Sleeve C1/C2 Piston Seal Installer	4FT506	FNH-00870
Seal Resizer C1/C2/C3/C4 Piston Seal	4FT507	FNH-00871
Clutch Piston Return Spring Compressor	4FT508	FNH-00872
FWD Transfer Tube Remover	4FT509	FNH-00873
Transmission Stand Bracket	4FT510	–
Gauge Rolled In Tube Replacement	4FT511	–
Gauge Rolled In Tube Expander	4FT512	–
Bypass Connector (Transmission Pressure Test)	4FT951	FNH-00875
Diagnostic Switch	4FT950	FNH-00874
Additional tools required not supplied in the above kit:		
Limp Home Harness	4FT952	FNH-00876
Adaptor	80265235	-
Slide Hammer	954C	–
Puller	951 or 9190	FNH-09190
Pulling Attachment	1002 or 9198	FNH-09198
Pressure Testing Switch Bypass Plug	NH.21-115	-

Tightening Torque Values

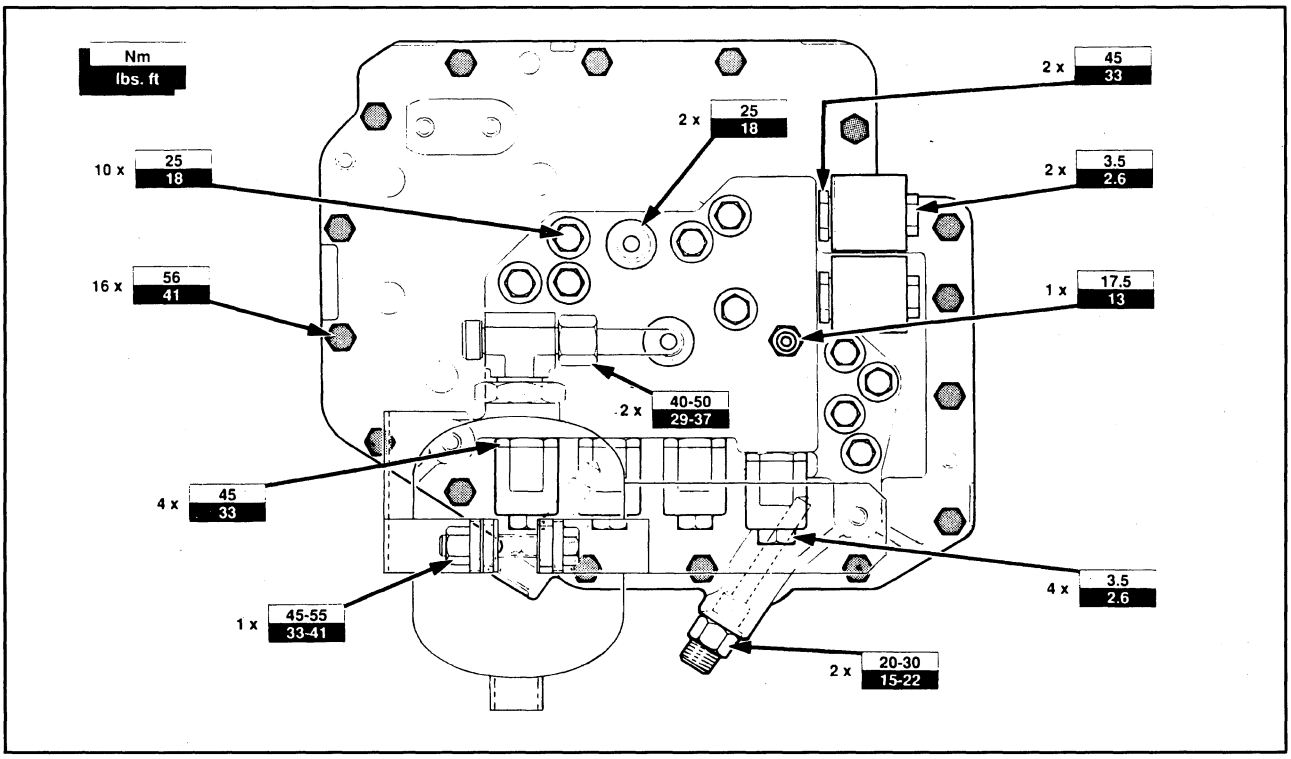

Side Cover (External View)

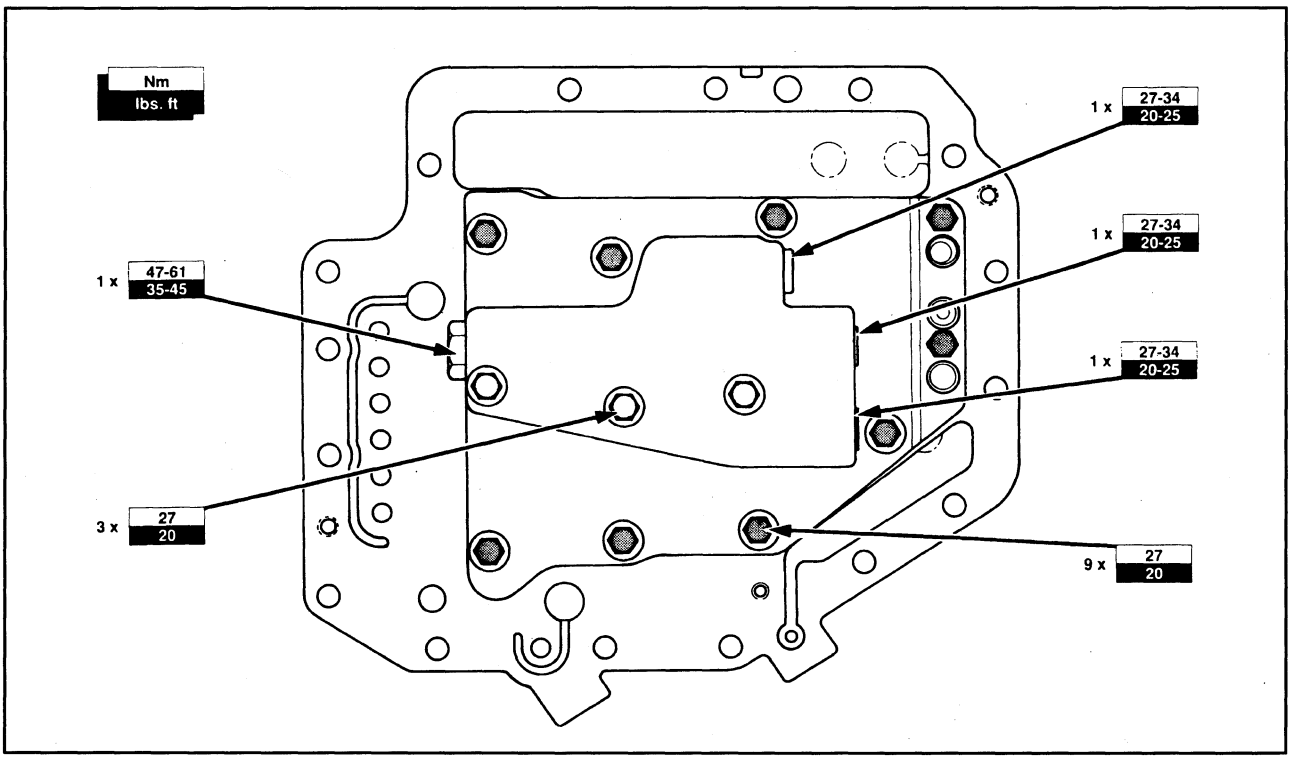

Side Cover (Internal View)

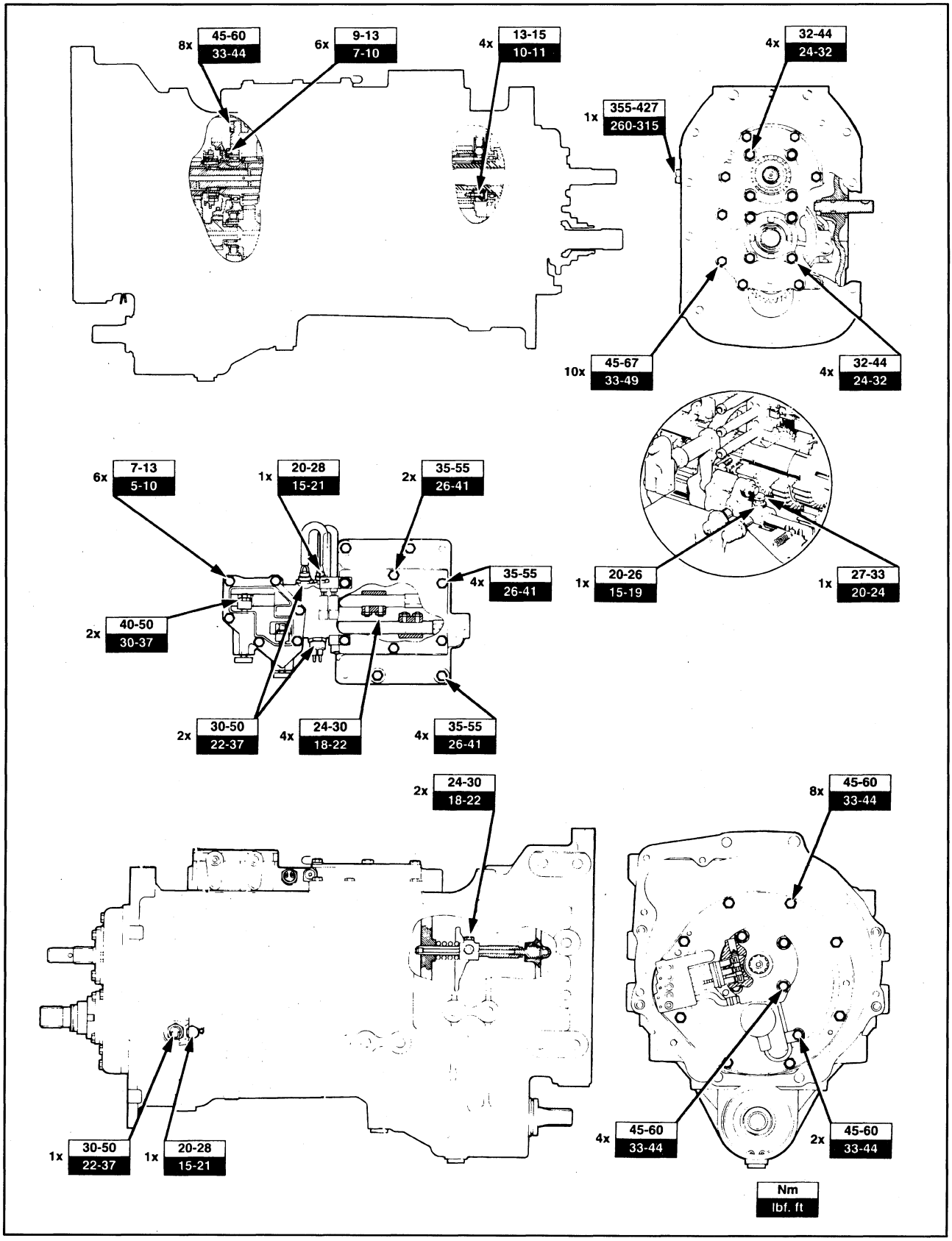
8x 45-60 33-44
6x 9-13 7-10
4x 13-15 10-11
4x 32-44 24-32
1x 355-427 260-315
10x 45-67 33-49
4x 32-44 24-32
6x 7-13 5-10
1x 20-28 15-21
2x 35-55 26-41
4x 35-55 26-41
2x 40-50 30-37
2x 30-50 22-37
4x 24-30 18-22
4x 35-55 26-41
1x 20-26 15-19
1x 27-33 20-24
2x 24-30 18-22
8x 45-60 33-44
1x 30-50 22-37
1x 20-28 15-21
4x 45-60 33-44
2x 45-60 33-44
Nm
lbf. ft

DESCRIPTION AND OPERATION

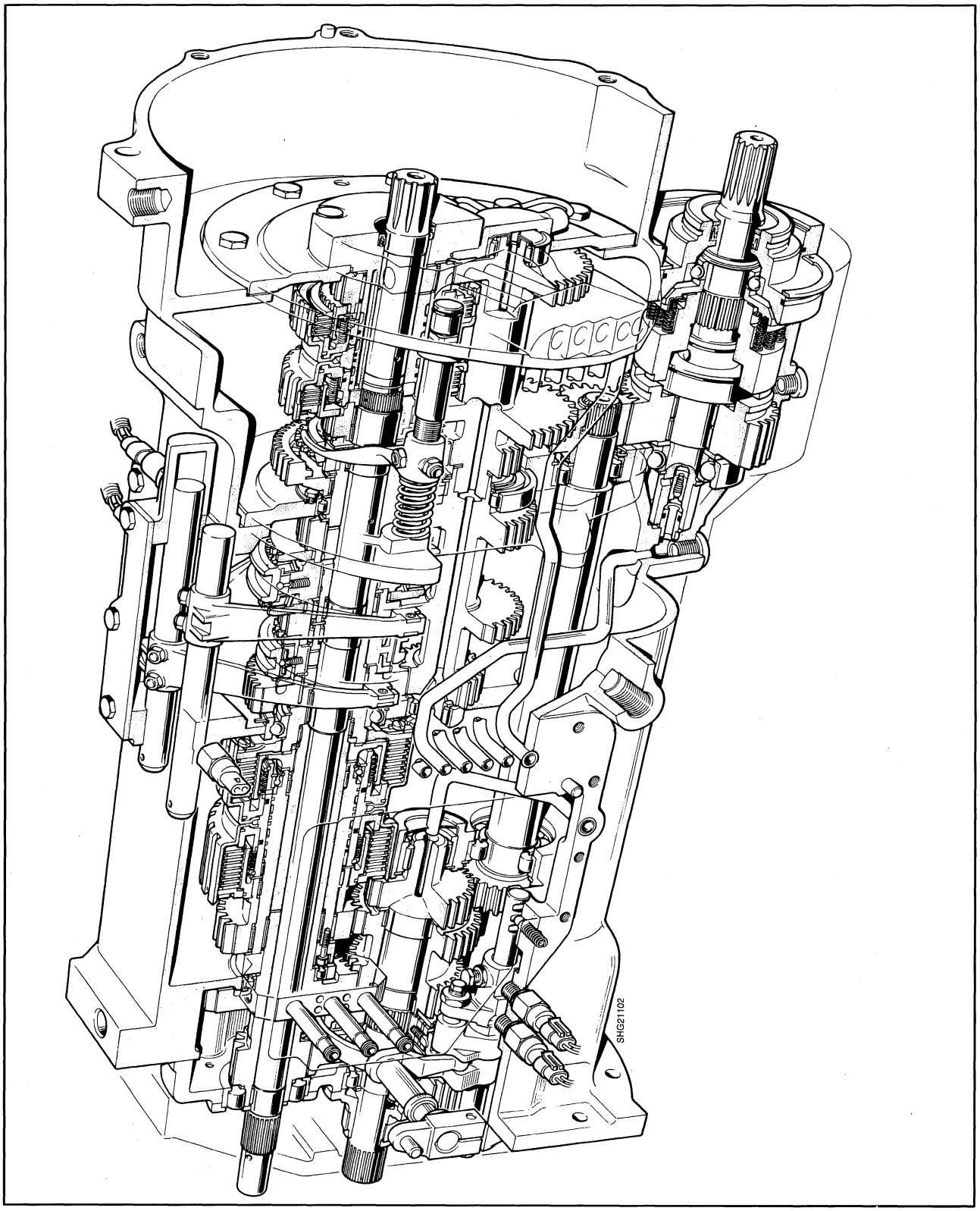

14

ELECTRO SHIFT TRANSMISSION

Introduction

The Electro Shift transmission is available in 30 or 40 kph, with 16 forward and 16 reverse gears, 2 or 4WD and with a creep option giving an additional eight gears.

Graziano Synchronizer

- Identified by a "G" next to the serial #.
- New status switches
- New shift rails
- New solenoids

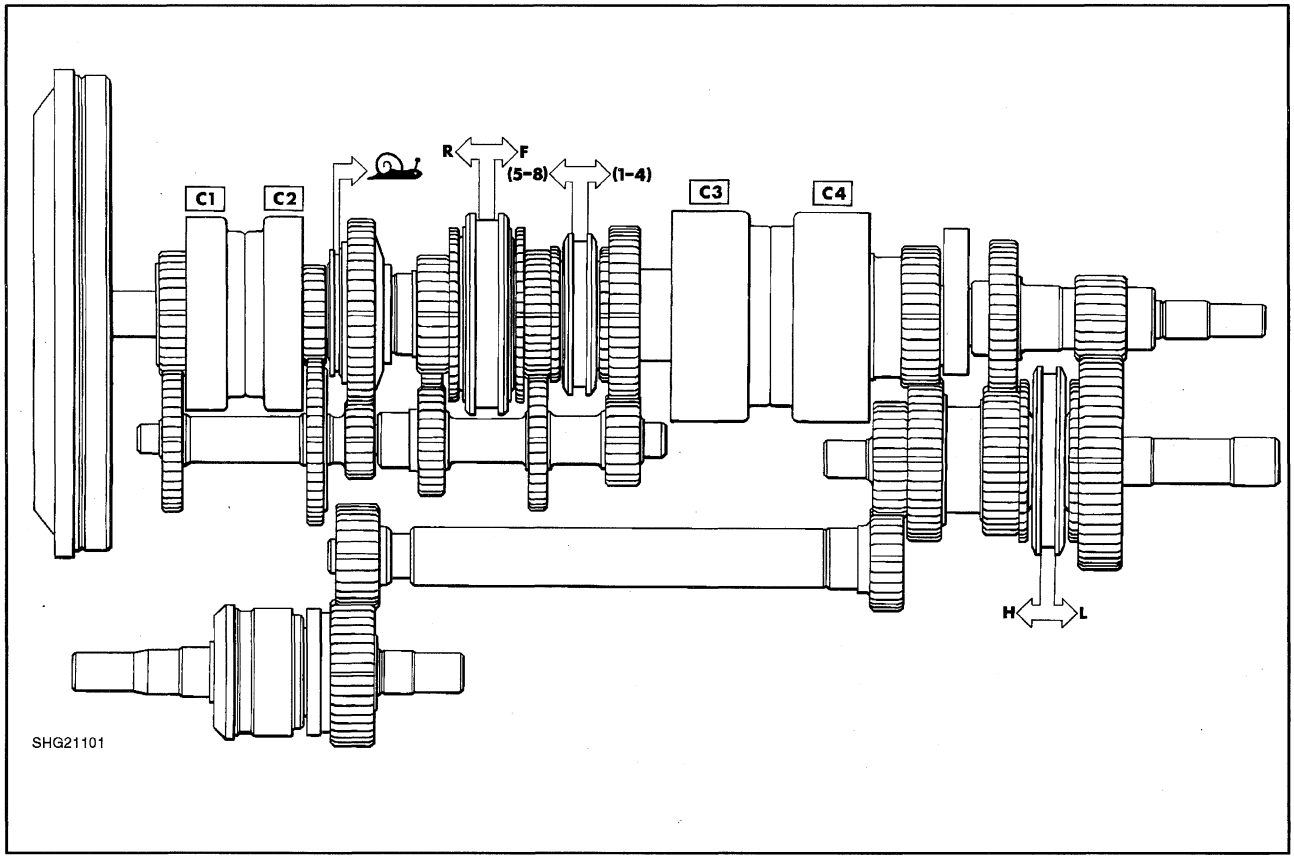

15

Four electro-hydraulic clutches provide four powershift (without clutch pedal) gear changes.

The main range mechanical synchroniser enables electro-hydraulic gears, 1 up to 4, or 5 up to 8, to be selected.

The High/Low synchroniser provides field or road speeds for the above 1 to 8 gears.

The mechanical synchroniser for Forward/Reverse, combined with the dump button which disengages drive to the electro-hydraulic clutches, provides a clutchless shuttle.

The transmission has a flywheel damper and no conventional clutch.

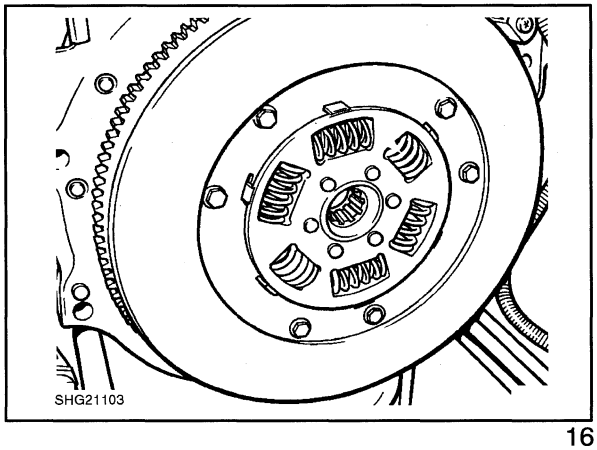

16

Electro-hydraulic control of a piston (1) which activates a coupler (2) provides an optional creep range. This only operates in Low range, giving a total of 24 x 24 gears.

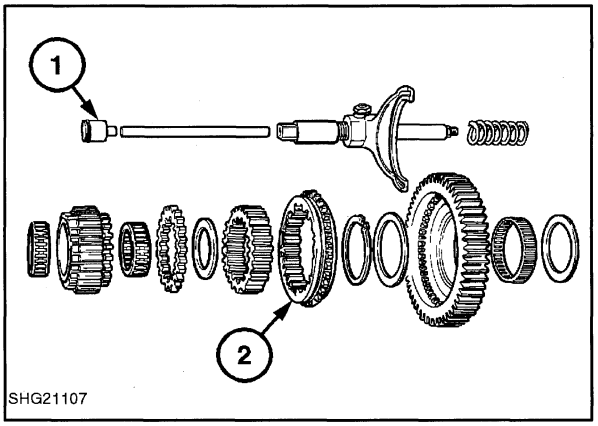

17

The processor gives accurate control, via Pulse Width Modulated (PWM) valves, of the four wet multiplate clutches.

This also enables clutchless shuttle operations, speed matching of gears, sequential powershifting and high range gear logic.

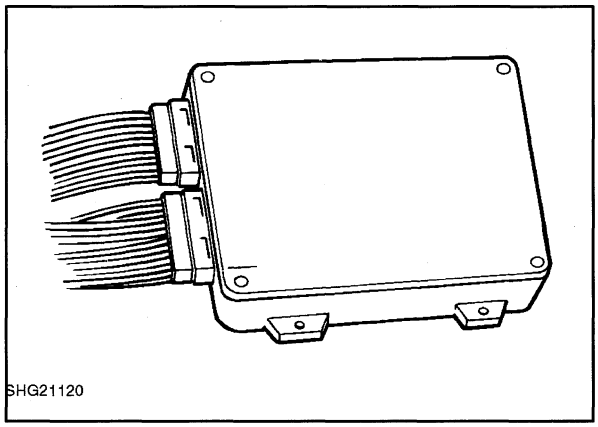

18

Operation

Downshifting or Upshifting is achieved by pressing the required button.

The clutch or inching pedal is used for all synchroniser changes and must be depressed when operating the High/Low, main shift (1-4 to 5-8) and the Forward/Reverse levers.

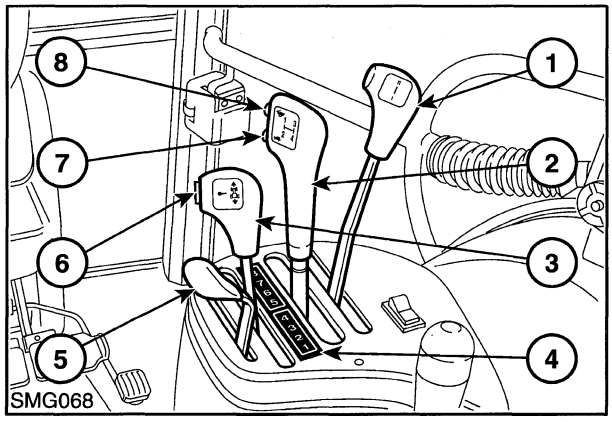

19

However, the Forward/Reverse lever also has a dump button which performs the same function as the interrupt button (1) when depressing the clutch/inching pedal.

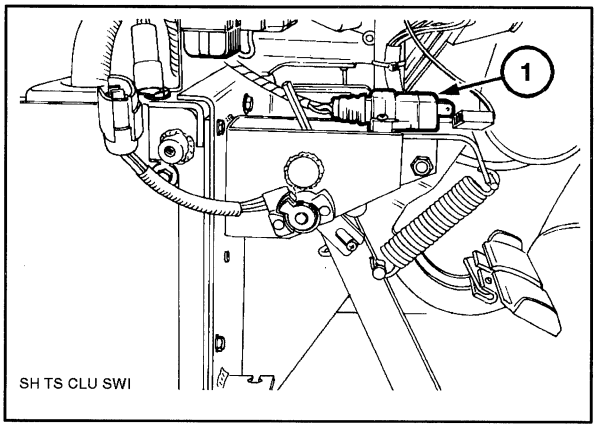

20

Creeper gear engagement (1) must only be undertaken with the tractor stopped, low range selected and inching pedal depressed.

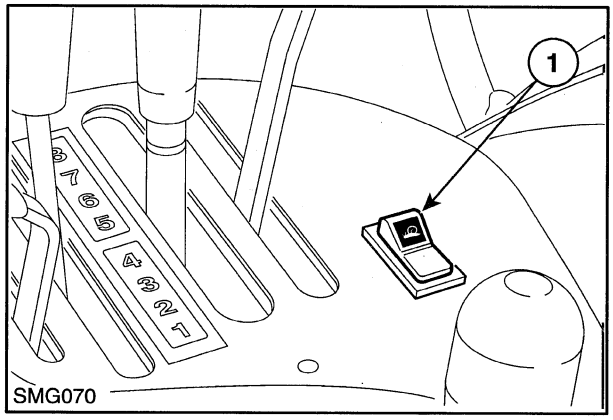

21

Clutchless shuttle/drive off

The dump button enables gear engagement and drive off, without using the clutch pedal and is particularly useful for shuttle operations.

When the dump switch button is depressed, drive is instantly disengaged. When the button is released, transmission output speed and clutch pack engagement are automatically monitored to take up the drive smoothly.

NOTE: *To prevent inadvertent shuttle lever engagement, an electronic interlock is provided. If the tractor is stationary with the shuttle lever in neutral the following procedure must be used to drive away.:*

Depress and release the dump switch then, within one second, depress and hold in the switch. Move the shuttle lever into gear. The drive will engage when the button is released. If this sequence is not followed a warning 'bleeper' will sound and the fault code 'CP' will appear in the digital display.

To change from forward to reverse motion, press the dump button, apply the brakes to slow the tractor, move the shuttle lever fully rearward, release the button and control tractor speed by means of the throttle.

IMPORTANT: *To reduce clutch damage caused by shuttle shifting in too high a gear or at too high a speed, a warning 'bleeper' will be heard and a symbol 'N' will appear in the instrument cluster under the following condition:*

- *In high range: ratios 5-8 and Shuttle shifting while the tractor is still rolling.*

Speed Matching

When travelling on the road in high range and the main shift lever is in the 5-8 position, the transmission will automatically select a gear ratio to match engine speed to road speed when up shifting or down shifting using the following procedure:

To Upshift

- Depress shuttle dump switch or inching pedal
- Decrease engine speed with foot throttle
- Release shuttle dump switch or inching pedal

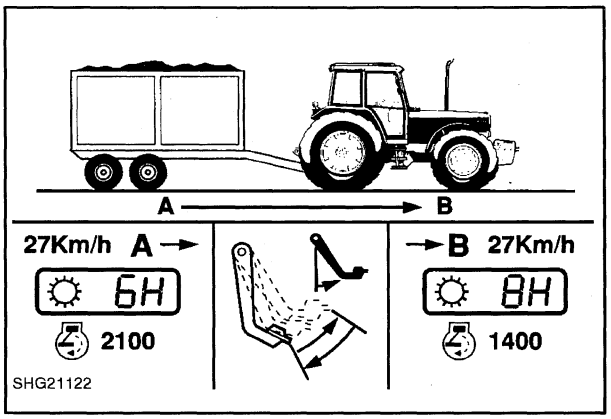

22

The microprocessor will then automatically select a higher gear ratio to approximately match road speed with engine speed.

To Downshift

- Decrease engine speed
- Depress shuttle dump switch or inching pedal
- Increase engine speed with foot throttle
- Release shuttle dump or inching pedal

The microprocessor will then automatically select a lower gear ratio to approximately match road speed with engine speed.

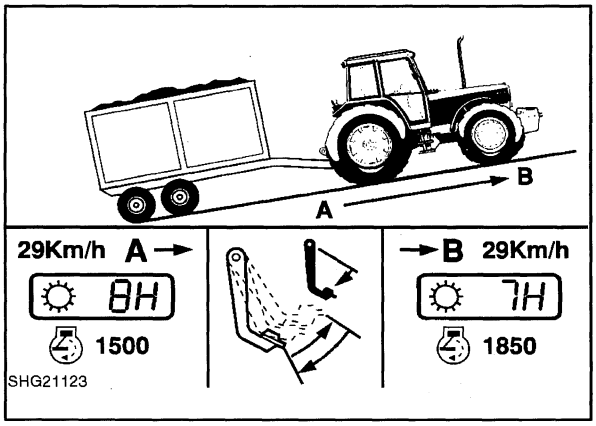

23

Low - High Range Change
(Main Shift Lever in 5-8 Position)

When it is necessary to start under load in LOW RANGE and change to HIGH RANGE an additional microprocessor feature provides automatic selection of 5H (13th speed) when the range lever is moved from low (8L) to high range.

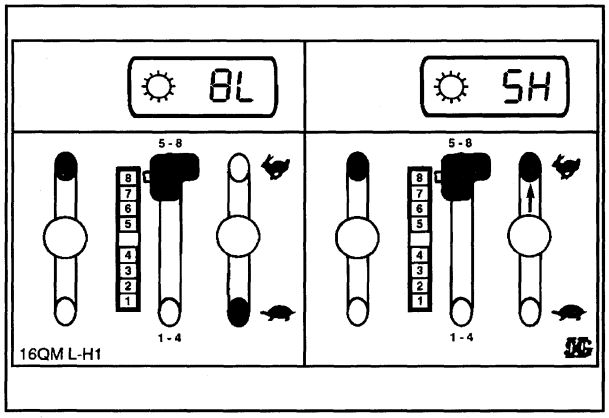

24

Sequential Powershifting

If the Powershift button is held depressed, the transmission will make sequential ratio changes at 1.75 second intervals until the button is released.

TRANSMISSION CONTROL/OPERATION

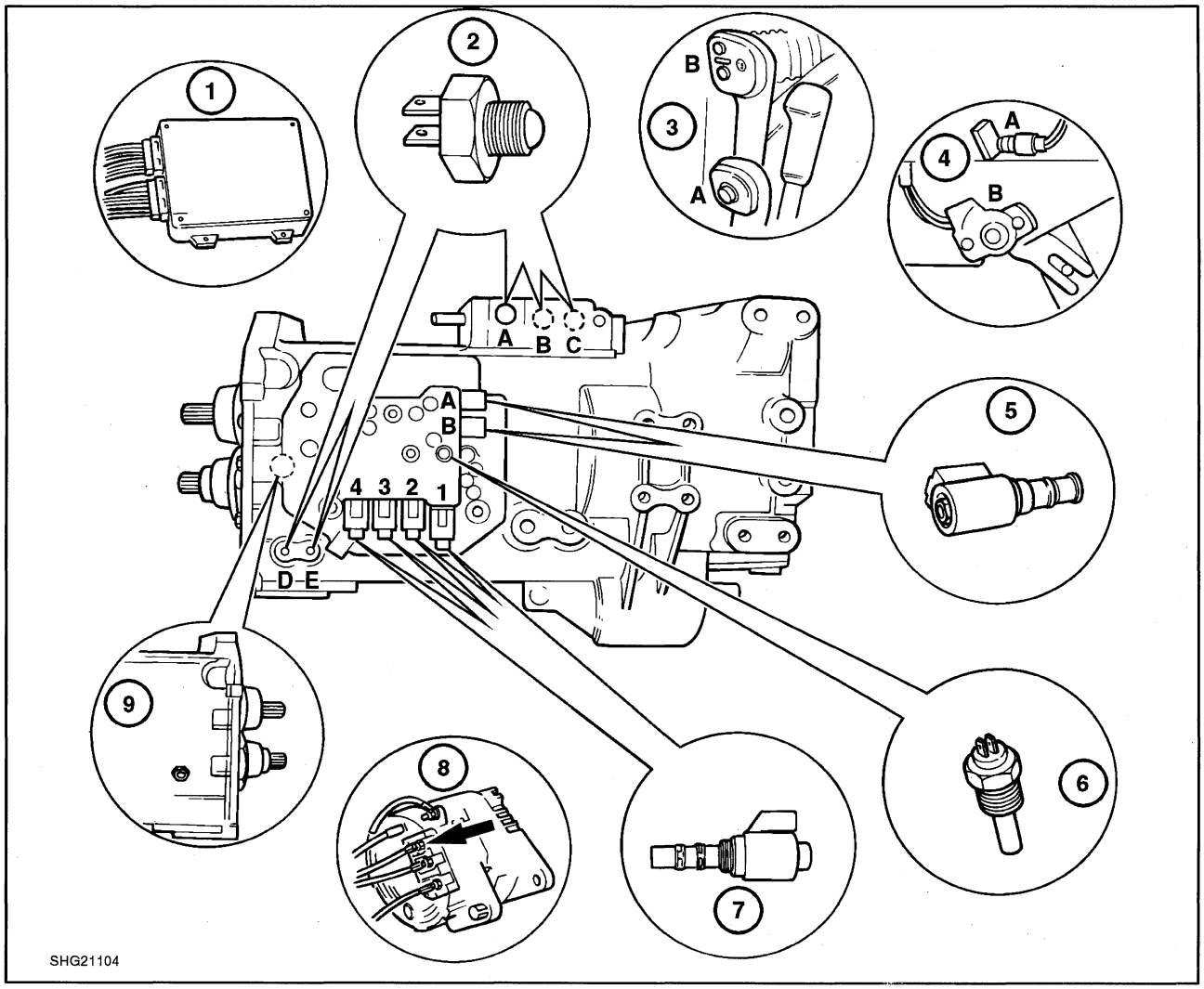

25

The operator controls the transmission using the gear levers and electrical buttons on these levers (3). Signals are then sent to the processor (1) from the status switches (2) which inform the processor which mechanical synchronisers are selected.

The operator also controls the clutch/inching pedal (4) which has a potentiometer (B) and a disconnect switch (A) attached to it.

The processor takes a signal from the alternator (8) which gives the engine speed. The transmission speed sensor (9) gives the output speed of the transmission, and thus the wheel speed, to the processor.

The transmission oil temperature is measured by the oil temperature sensor (6) adjacent to the transmission control valves. This gives an indication of oil viscosity to the processor.

The processor then controls the four Pulse Width Modulated (PWM) valves (7) which regulate the Low Pressure Oil (18-20 bar) to operate the four clutches within the transmission.

The speed that the clutches hydraulically engage and disengage is controlled by the processor through the PWM valves and is dependant upon all the signals received from the operator and the sensors. The two clutches at the front of the transmission C1/C2 can be considered as ON/OFF clutches. However, a degree of gradual engagement/disengagement exists during gear changes. The two clutches at the rear of the transmission C3/C4 are much larger and can be considered as the feathering or gradual engagement clutches. It is these clutches that permit smooth gear changes and take-offs by progressively engaging until fully locked.

Whilst operating in any one gear, one of the C1/C2 and one of the C3/C4 clutches is always fully engaged.

TRANSMISSION HYDRAULIC CONTROL

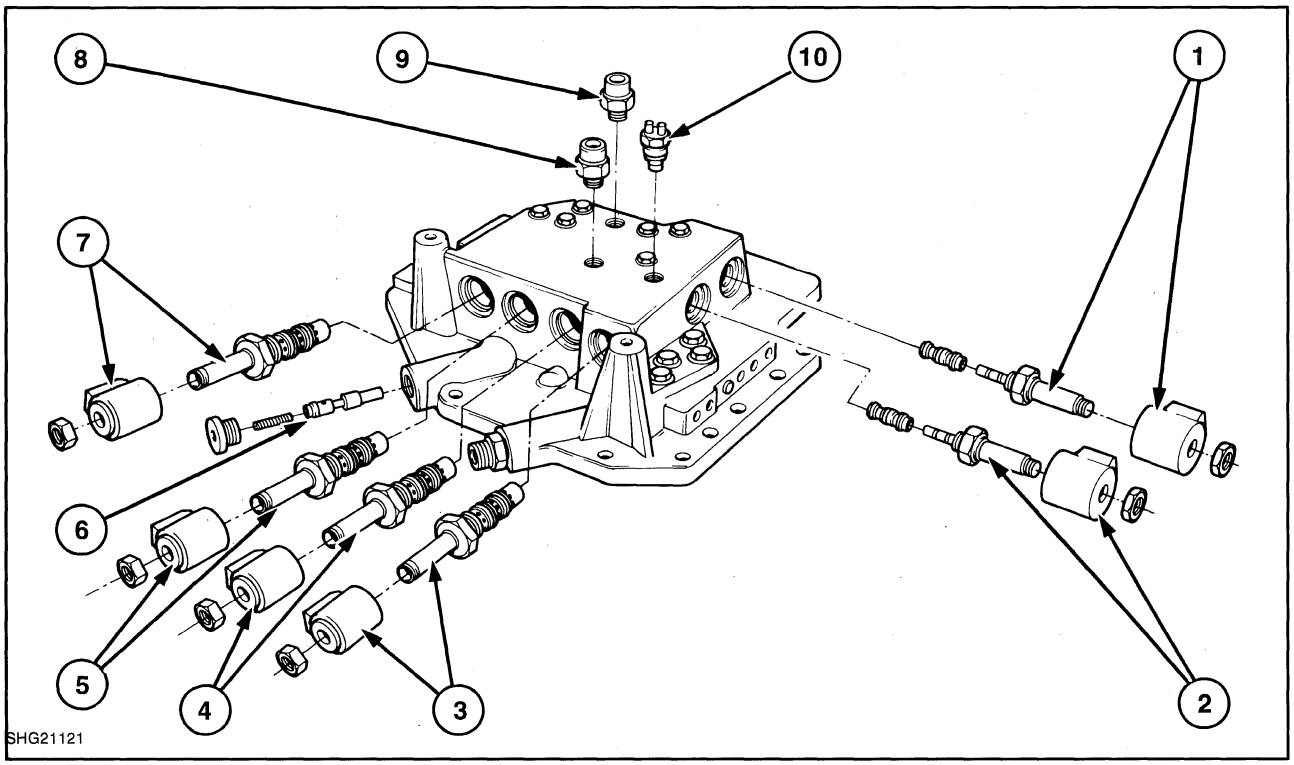

26

Mounted on the side of the transmission is the control valve assembly.

The control valve pack is supplied with Low Pressure Oil (8) (18-20 bar) from an accumulator (Fig. 11). This is necessary to ensure minimum drop in oil pressure when changing gear, particularly when changing two clutches at once.

Oil for lubrication enters at point 9.

The control valve pack incorporates four PWM valves (3,4,5,7), a transmission oil temperature sensor (10) and optional 4WD (2) and creep solenoids (1) and a creep interlock piston (6).

Mounted on the rear of the control valve pack is the lubrication combining valve pack. This incorporates the lubrication regulating valve (1), the lubrication combining valve (2) with valve spool and spring (4) and the lubrication shuttle valve (3).

This valve pack combines lubrication oil at 5 bar with low pressure/transmission control oil at 18-20 bar to increase clutch lubrication during clutch feathering.

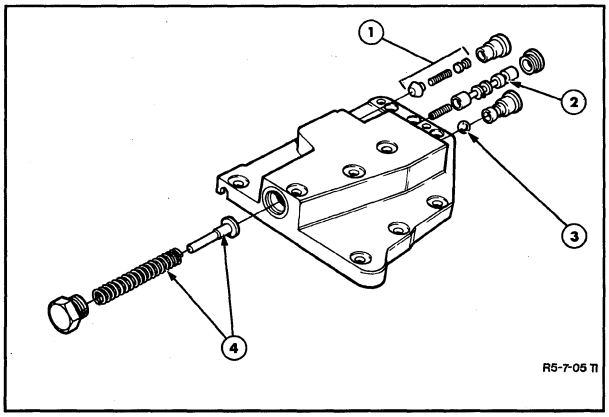

27

TRANSMISSION GEAR DESCRIPTION

Gear	Description	Number of teeth	
		40 Kph	30 Kph
A	C1 Clutch Output Gear	34	
B	C2 Clutch Output Gear	26	
C	Creeper Driven Gear	55	
D	Front Bottom Shaft Gear	42	
E	Front Bottom Shaft Gear	48	
F	Front Bottom Shaft Gear (Creeper only)	20	
G	Reverse Gear	33	
H	Forward Gear and/or Coupler	37	
J	Low Main Gear	53	
K	Intermediate Bottom Shaft Gear	37	
L	Intermediate Bottom Shaft Gear	41	
M	Intermediate Bottom Shaft Gear	25	
N	C4 Clutch Output Gear	42	37
O	C3 Clutch (High) Output Gear	46	41
P	C3 Clutch (Low) Output Gear	22	
R	Output Gear	37	43
R1	Reverse Idler Gear	31	
S	Output Gear	33	39
T	Low Range Output Gear	65	
U	Output to FWD	29	
V	FWD Internal Shaft Rear Gear	26	
X	FWD Internal Shaft Front Gear	26	
Y	FWD Transfer Assembly Driven Gear	37 or 38	

C1 is Clutch C1 C2 is Clutch C2 C3 is Clutch C3 C4 is Clutch C4

POWER FLOWS - NEUTRAL

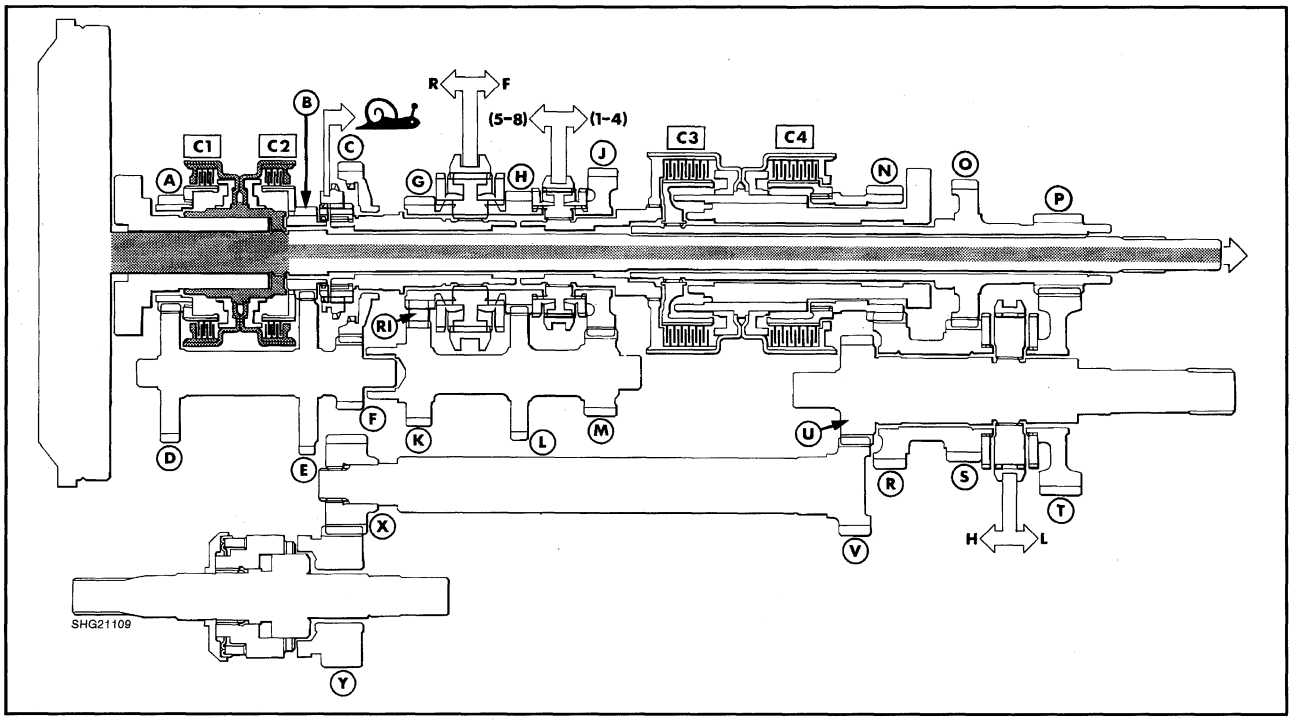

28

Hydraulic clutches engaged

	C1	C2	C3	C4	
1-5		○		○	9-13
2-6		○	○		10-14
3-7	○			○	11-15
4-8	○		○		12-16

29

Gear lever positions

- Engine power is transmitted from the flywheel mounted damper to the input - PTO drive shaft and C1-C2 clutch housing which is splined to the shaft.
- In Neutral, clutches C1 and C2 are disengaged, drive is therefore not transmitted beyond C1-C2 clutch housing.
- All synchronisers are shown in neutral.

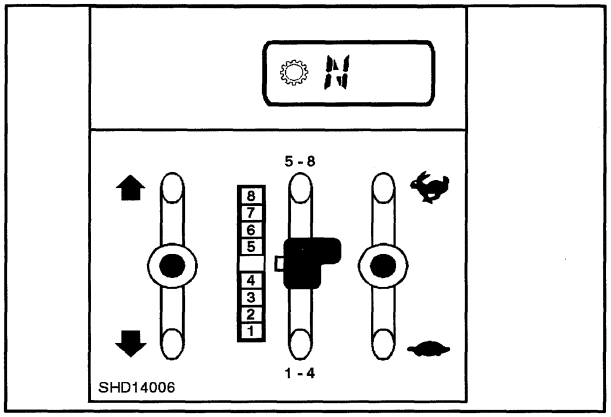

30

POWER FLOWS - 1ST GEAR

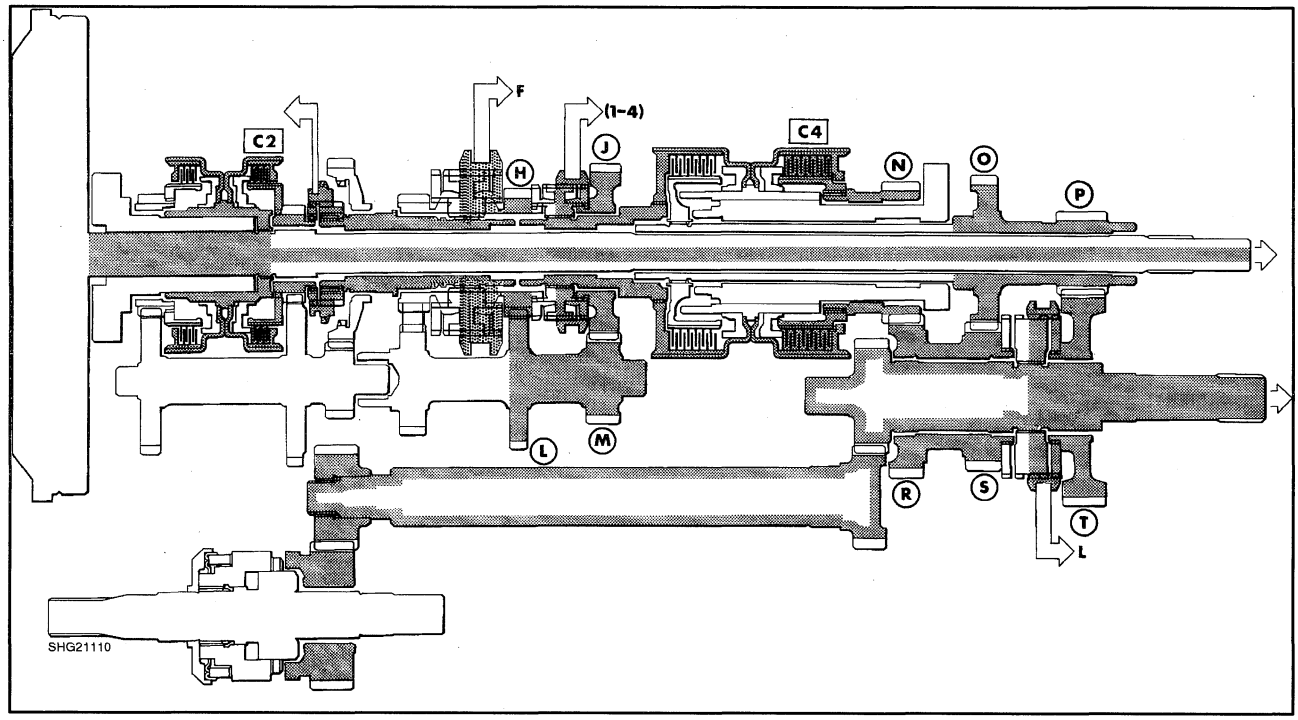

31

Hydraulic clutches engaged

	C1	C2	C3	C4	
1-5		●		●	9-13
2-6		○	○		10-14
3-7	○			○	11-15
4-8	○		○		12-16

32

Gear lever positions

- Synchronisers engaged as shown: clutches C2 and C4 applied.
- Inching pedal: Clutch 4 disengages if pedal depressed.
- POWER FLOW: *Input shaft - clutch 2 - F/R synchroniser - gears H-L-M-J-Main synchroniser - clutch 4 - gears N-R-S-O-P-T-High/Low synchroniser- output shaft.*

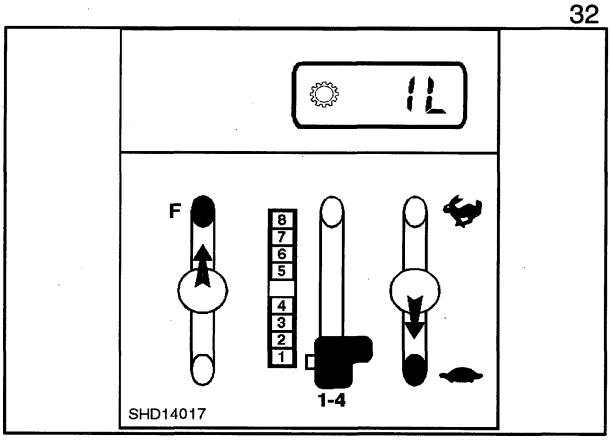

33

POWER FLOWS - 2ND GEAR

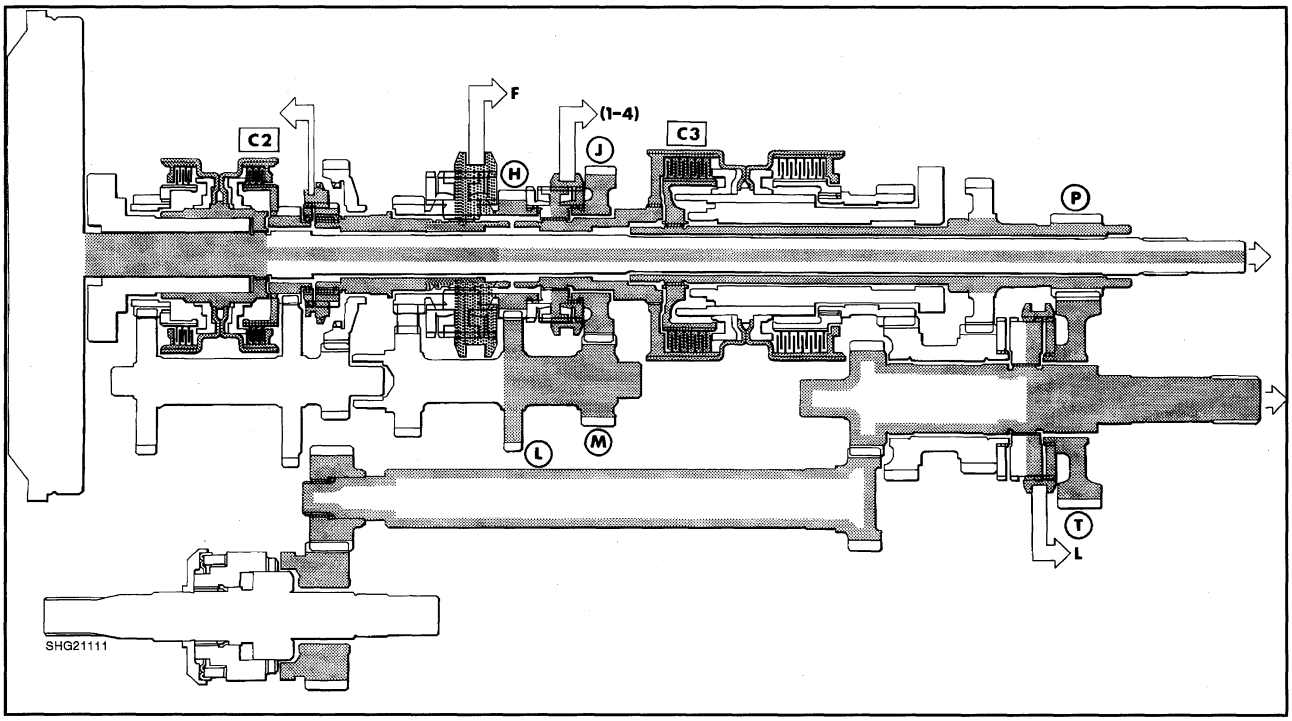

34

Hydraulic clutches engaged

	C1	C2	C3	C4	
1-5		○		○	9-13
2-6		●	●		10-14
3-7	○			○	11-15
4-8	○		○		12-16

35

Gear lever positions

- Powershifting from 1 to 2 engages clutch 3 and disengages clutch 4 changing the power flow at the rear of the transmission.
- Inching pedal: Clutch 3 disengaged if pedal depressed.
- POWER FLOW: *Input shaft - clutch 2 - F/R synchroniser - gears H-L-M-J-Main synchroniser - clutch 3 - gears P-T-High/Low synchroniser - output shaft.*

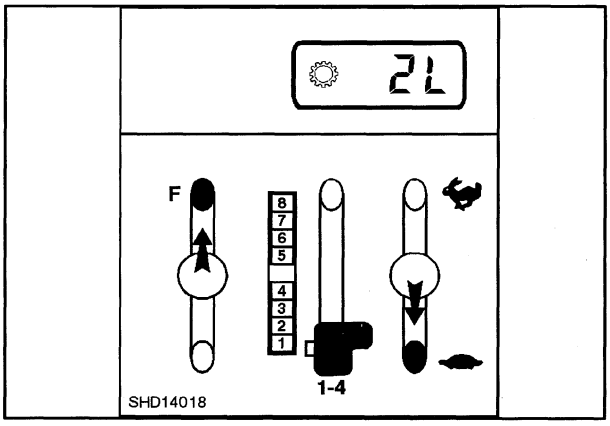

36

POWER FLOWS - 3RD GEAR

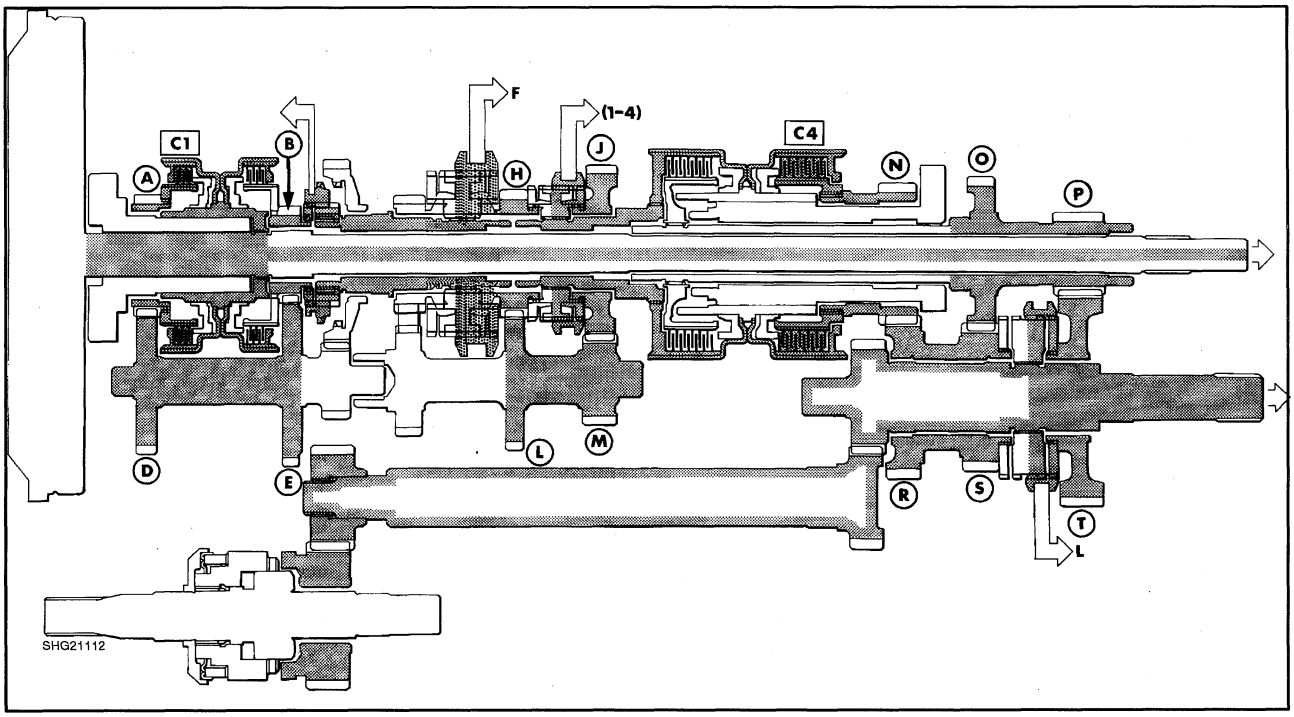

37

Hydraulic clutches engaged

	C1	C2	C3	C4	
1-5		○		○	9-13
2-6		○	○		10-14
3-7	●			●	11-15
4-8	○		○		12-16

38

Gear lever positions

- Powershifting from 2nd to 3rd involves two clutch changes:
  C2 to C1
  C3 to C4
- POWER FLOW: *Input shaft - clutch 1 - gears A-D-E-B-F/R synchroniser - Gears H-L-M-J- Main synchroniser - clutch 4 Gears N-R-S-O-P-T- High/Low synchroniser - output shaft.*

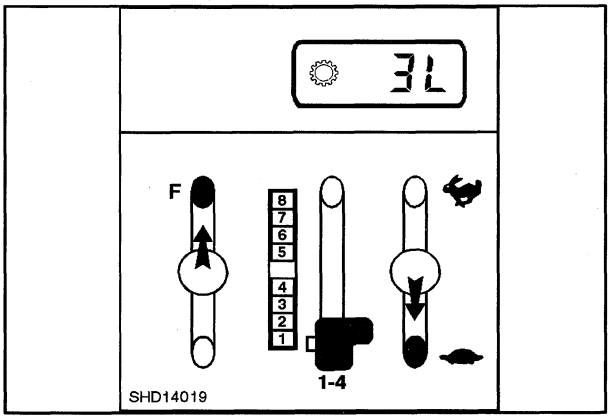

39

POWER FLOWS - 4TH GEAR

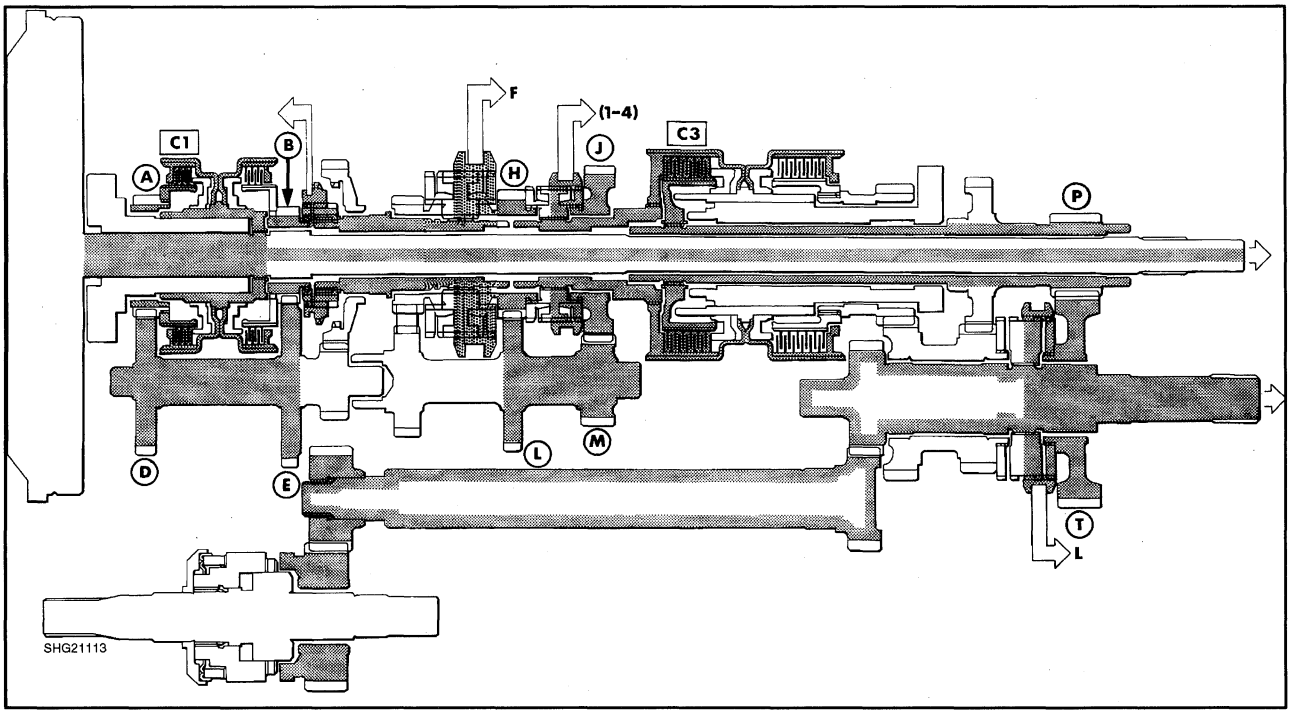

40

Hydraulic clutches engaged

	C1	C2	C3	C4	
1-5		○		○	9-13
2-6		○	○		10-14
3-7	○			○	11-15
4-8	●		●		12-16

41

Gear lever positions

- Powershifting from 3 to 4 engages clutch 3 and releases clutch 4.
- POWER FLOW: *Input shaft - clutch 1 - gears A-D-E-B- F/R synchroniser - Gears H-L-M-J- Main synchroniser - clutch 3 - Gears P-T- High/Low synchroniser - output shaft.*

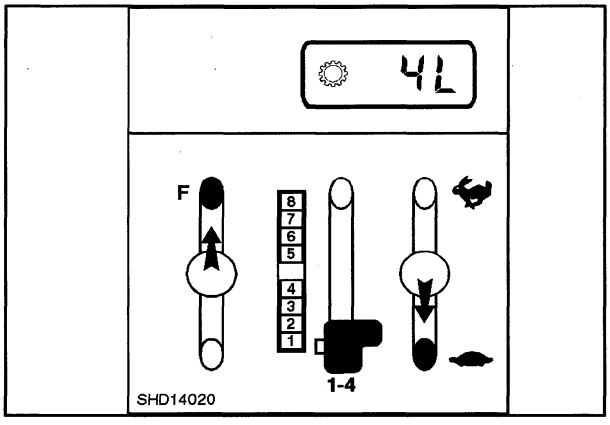

42

POWER FLOWS - 5TH GEAR

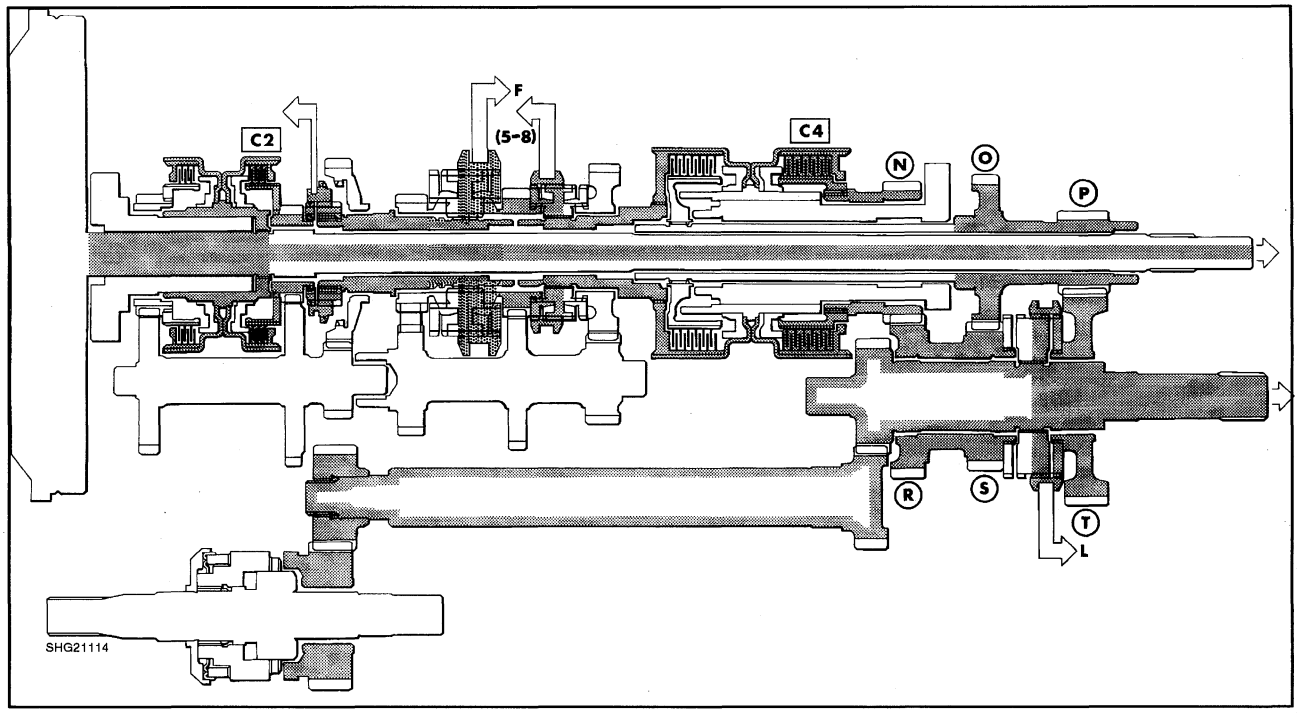

43

Hydraulic clutches engaged

	C1	C2	C3	C4	
1-5		●		●	9-13
2-6		○	○		10-14
3-7	○			○	11-15
4-8	○		○		12-16

44

Gear lever positions

- 4th to 5th Change:
  Synchroshift (1-4) to (5-8) with main shift lever using inching pedal. Automatic micro-computer controlled clutch sequence engages clutches 2 and 4, releases clutch C1 and C3.
- Main Synchroniser:
  Main synchroniser in (5-8) position provides direct drive in centre section.
- POWER FLOW: *Input shaft - clutch 2 - F/R synchroniser - main synchroniser - Clutch 4 - Gears N-R-S-O-P-T- High/Low synchroniser - output shaft.*

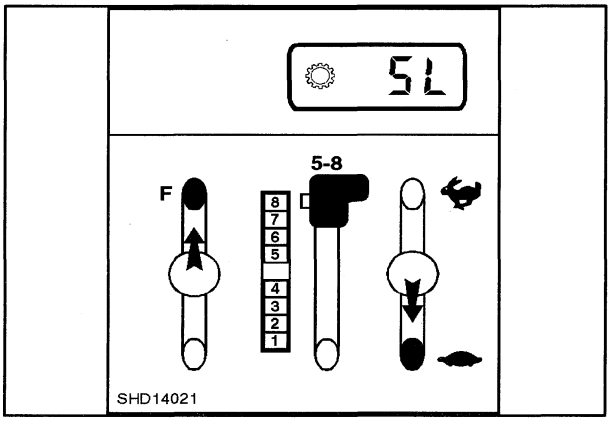

45

POWER FLOWS - 8TH GEAR

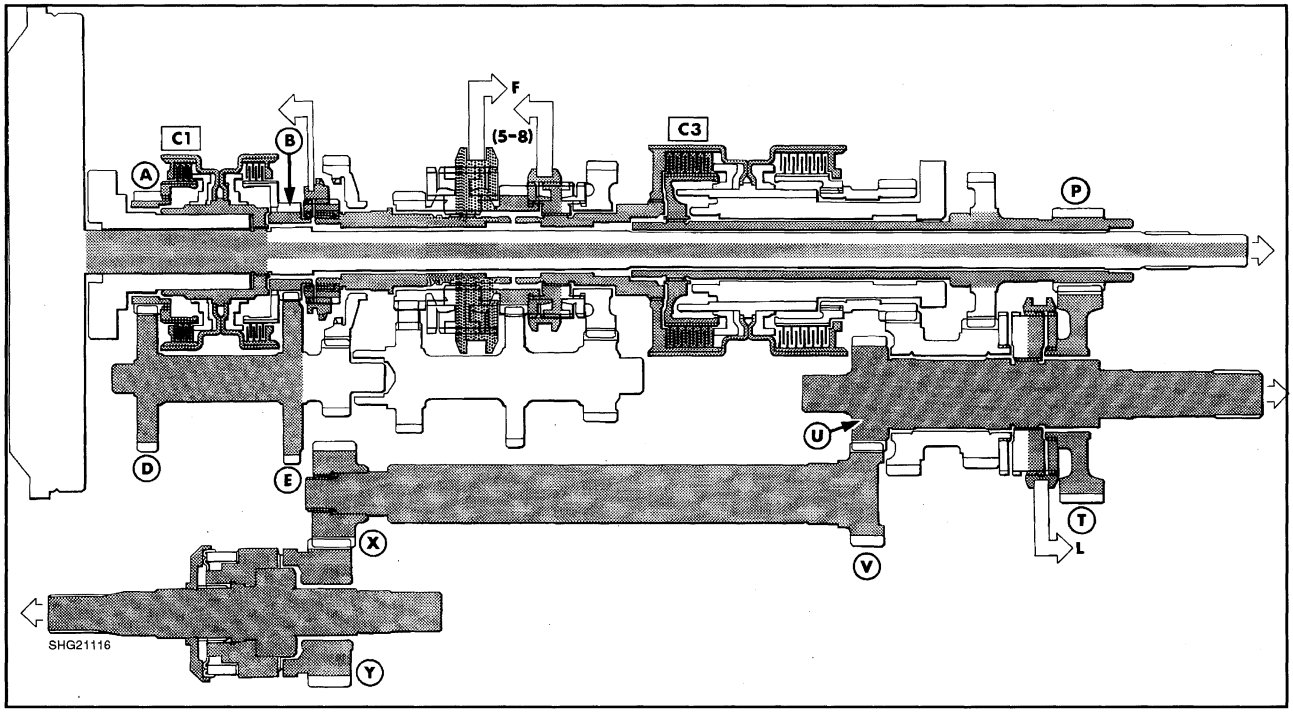

46

Hydraulic clutches engaged

	C1	C2	C3	C4	
1-5		○		○	9-13
2-6		○	○		10-14
3-7	○			○	11-15
4-8	●		●		12-16

47

Gear lever positions

- Power flows for 6th, 7th and 8th are similar to 2nd-3rd-4th except for the main synchroniser which provides a direct drive in (5-8) position.
- The four wheel drive clutch is shown engaged.
- Drive is transmitted from the output shaft to the four wheel drive transfer assembly by gears U-V-X-Y.

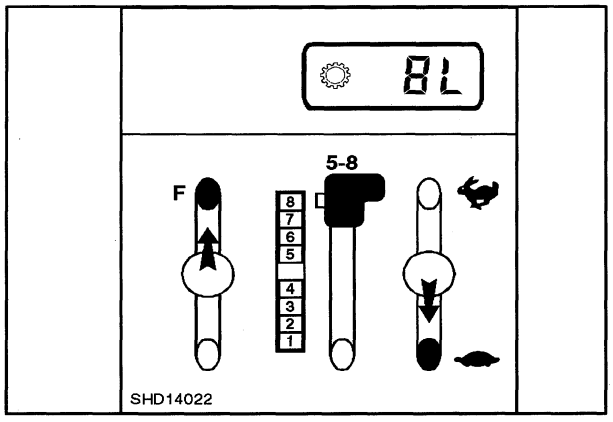

48

POWER FLOWS - 16TH GEAR

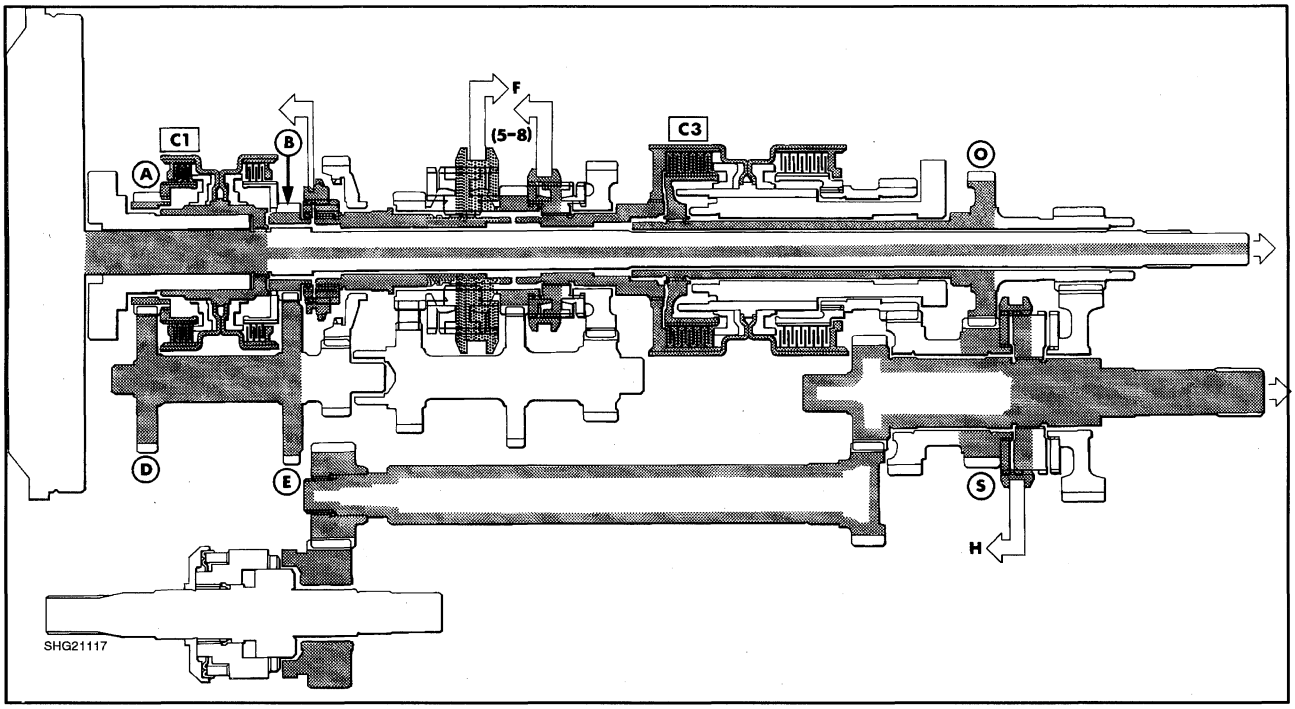

49

Hydraulic clutches engaged

	C1	C2	C3	C4	
1-5		○		○	9-13
2-6		○	○		10-14
3-7	○			○	11-15
4-8	●		●		12-16

50

Gear lever positions

- In high range speeds the high/low synchroniser is engaged with the output shaft cluster gear (R-S), providing a higher ratio drive from the C3 and C4 clutch output.
- Power flows in each gear in high range are similar to low range except for clutch 3 and clutch 4 output drive.
- POWER FLOW: *16th Gear:-*
  Input shaft - clutch 1 - gears A-D-E-B forward/reverse synchroniser -
  Main synchroniser - clutch 3 - gears O-S - high/low synchroniser - output shaft

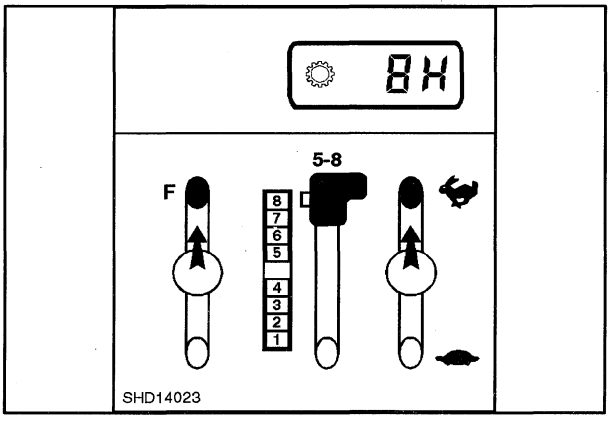

51

POWER FLOWS - 1ST CREEPER

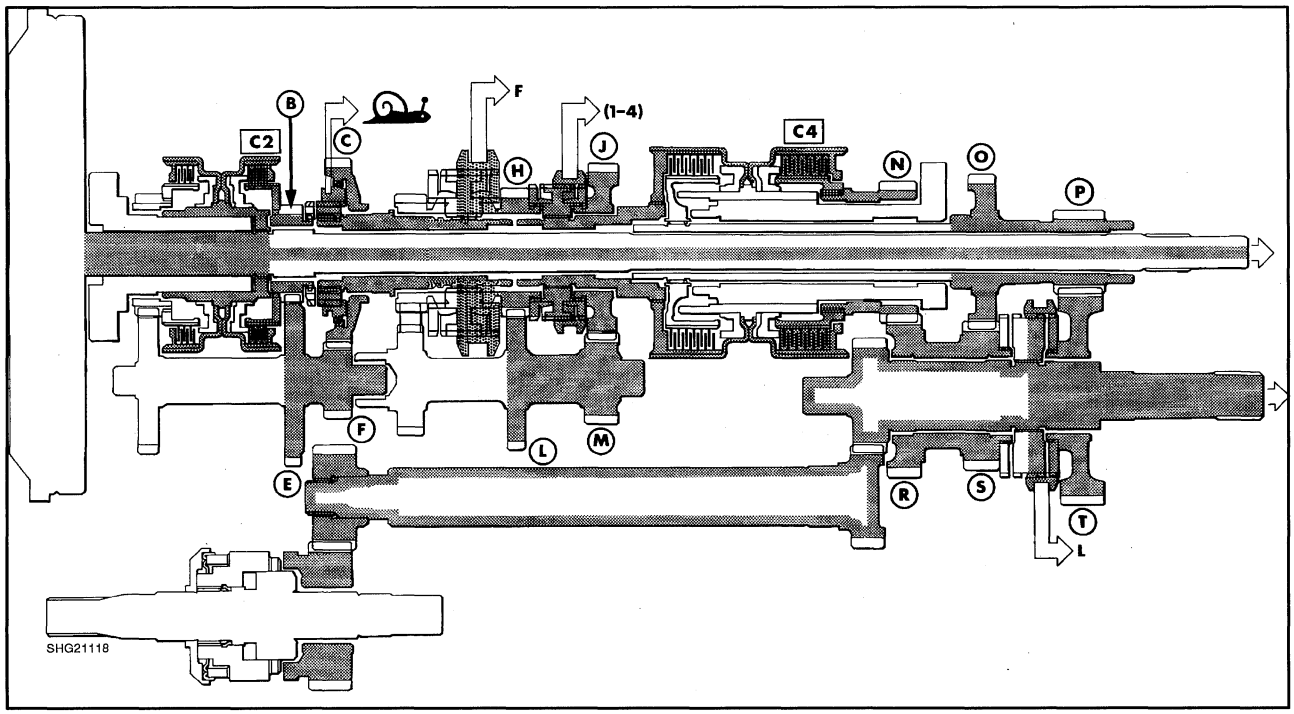

52

Hydraulic clutches engaged

	C1	C2	C3	C4	
1-5		●		●	9-13
2-6		○	○		10-14
3-7	○			○	11-15
4-8	○		○		12-16

53

Gear lever positions

- Creeper coupler engagement is electro- hydraulic with overriding control from the transmission control module.
- Creeper engagement is only possible with tractor stopped and with:-
  - Low range engaged
  - Inching pedal fully down
  - Operation of rocker switch on dash panel.
- With creeper engaged C1 and C2 output is directed to gears E-F which provide the additional reduction in the transmission drive line.

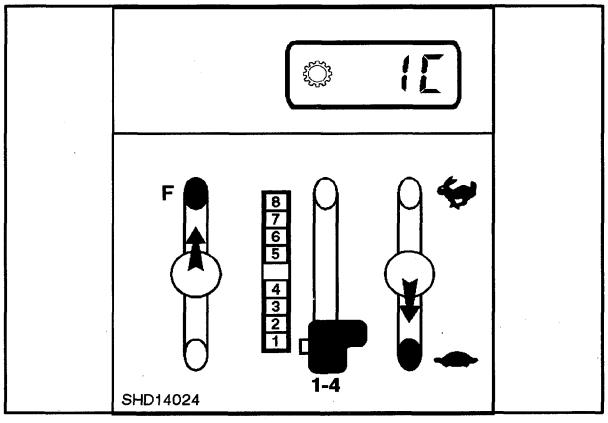

54

POWER FLOWS - 2ND REVERSE GEAR

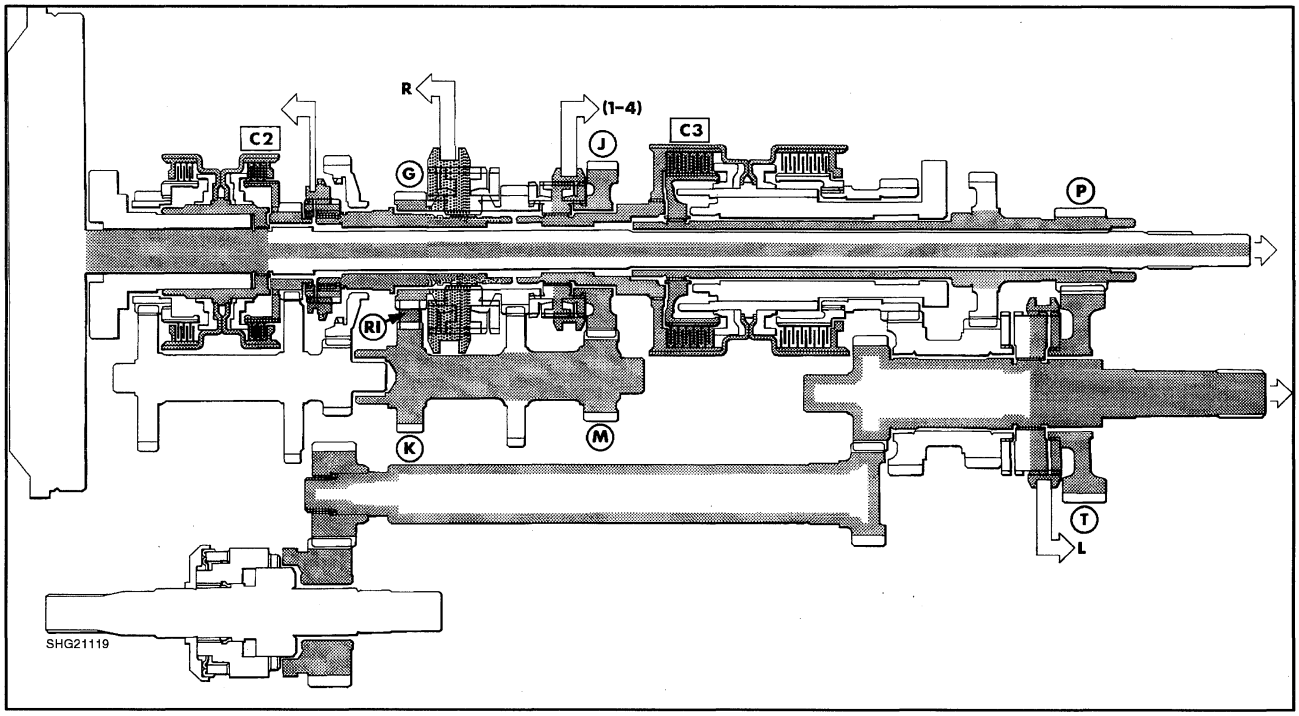

55

Hydraulic clutches engaged

	C1	C2	C3	C4	
1-5		○		○	9-13
2-6		●	●		10-14
3-7	○			○	11-15
4-8	○		○		12-16

56

Gear lever positions

- The forward/reverse synchroniser provides a reverse drive for all forward speeds (1-16 and creeper 1-8).
- Moving the synchroniser into reverse engages gear G, output from the C1-C2 clutches will be transmitted through gears G-R_1-K-M-J reversing the drive line to clutches 3 and 4.

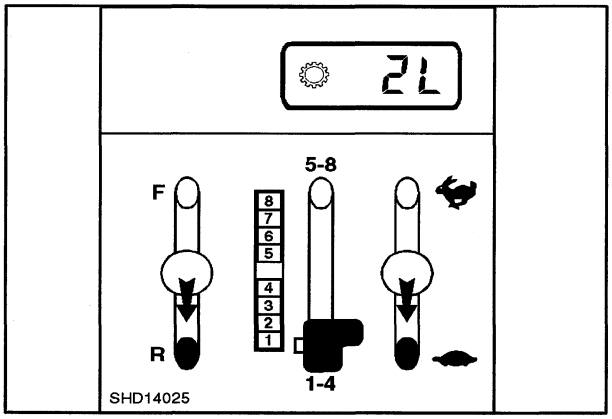

57

KEY TO TRANSMISSION HYDRAULIC CIRCUIT SCHEMATIC ILLUSTRATIONS

1. Regulated Pressure Supply from CCLS Pump 18-20 bar
2. Lubrication Supply from Steering Motor Return
3. Supply from Creeper Solenoid to FWD Clutch
4. Supply from FWD Solenoid to FWD Clutch
5. Lubrication Combining Valve
6. Lubrication Shuttle Valve
7. Lubrication Supply to PTO Clutch
8. Lubrication Supply to Transmission Shafts and Synchronisers
9. Lubrication Proportioning Valve C3/C4 Clutches
10. Lubrication Proportioning Valve C1/C2 Clutches
11. Accumulator 10 bar/0.7 litres
12. Lubrication Relief Valve

C1 Clutch 1
C2 Clutch 2
C3 Clutch 3
C4 Clutch 4

PWM Pulse Width Modulation Valve

Symbols

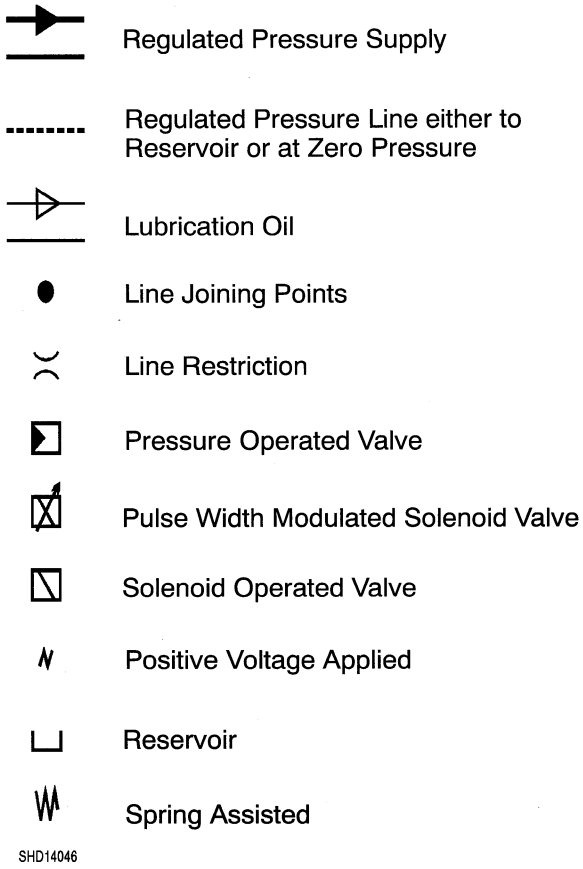

SHD14046

TRANSMISSION HYDRAULIC CIRCUIT SCHEMATIC - START UP

- Regulated pressure oil at 18-20 bar (260-290 lbf/in^2) is supplied to the transmission side cover assembly by the CCLS piston pump (1).
- Lubrication oil is supplied to the transmission side cover assembly from the steering motor/cooler return (2). Maximum pressure is limited by the lubrication relief valve (12) to 7 bar (100 lbf/in^2).
- Regulated pressure oil is directed to:-
  - C1 PWM Valve
  - C2 PWM Valve
  - C3 PWM Valve
  - C4 PWM Valve
  - Creeper Solenoid Valve (3)
  - FWD Solenoid Valve (4)
  - Lubrication Combining Valve (5)

Since the PWM and solenoid valves are not energised there is no flow of regulated pressure oil.

- Lubrication oil is directed to the lubrication combining valve, spring pressure moves the valve to the left.
- The lubrication oil from the lubrication combining valve is directed to:-
  - C1/C2 Clutches
  - C3/C4 Clutches
  - Transmission Shafts and Synchronisers
  - PTO Clutch

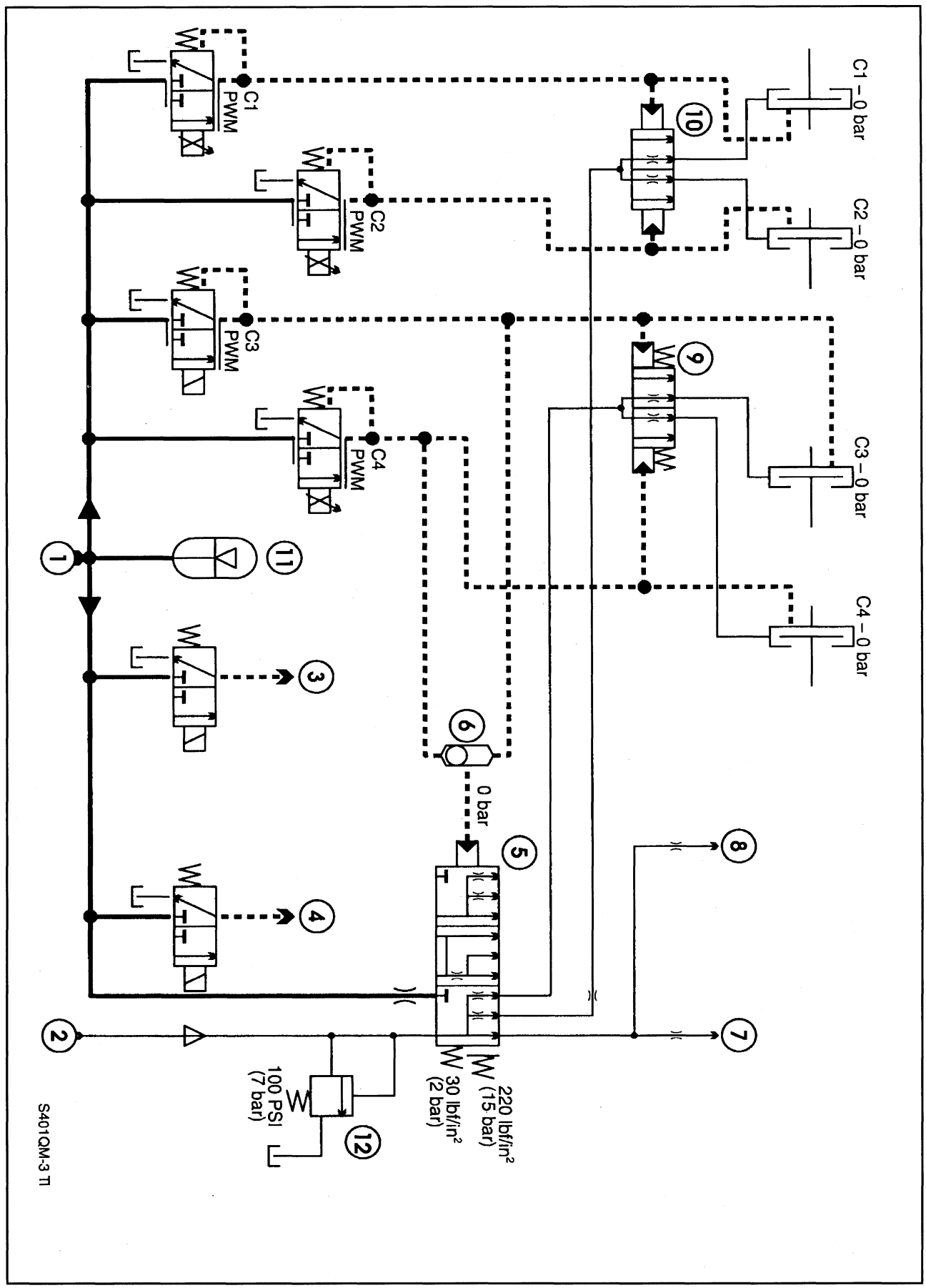
C1 – 0 bar
C2 – 0 bar
C3 – 0 bar
C4 – 0 bar
C1 PWM
C2 PWM
C3 PWM
C4 PWM
0 bar
220 lbf/in² (15 bar)
30 lbf/in² (2 bar)
100 PSI (7 bar)
S401QM-3 TI

TRANSMISSION HYDRAULIC CIRCUIT SCHEMATIC - SPEED 1 SELECTED, INCHING PEDAL PARTIALLY RAISED

- As the inching pedal is partially raised C2 PWM valve opens fully, allowing full pressure (18 bar) into clutch C2.
- C1/C2 lubrication proportioning valve (10) is moved to the left by C2 clutch pressure, increasing C2 clutch lubrication, reducing C1 clutch lubrication.
- As the inching pedal is released further, C4 PWM valve is progressively energised. As C4 clutch apply pressure increases from zero to 2 bar, oil flows past the lubrication shuttle valve (6) to the left end of the lubrication combining valve (5), moving it right to its central position. Pressure regulated oil is combined with existing C3/C4 lubrication oil to increase lubrication oil flow during clutch apply. Lubrication to transmission and PTO is reduced during clutch apply.
- C3/C4 lubrication proportioning valve (9) is moved to the left by C4 clutch apply pressure to increase C4 clutch lubrication.

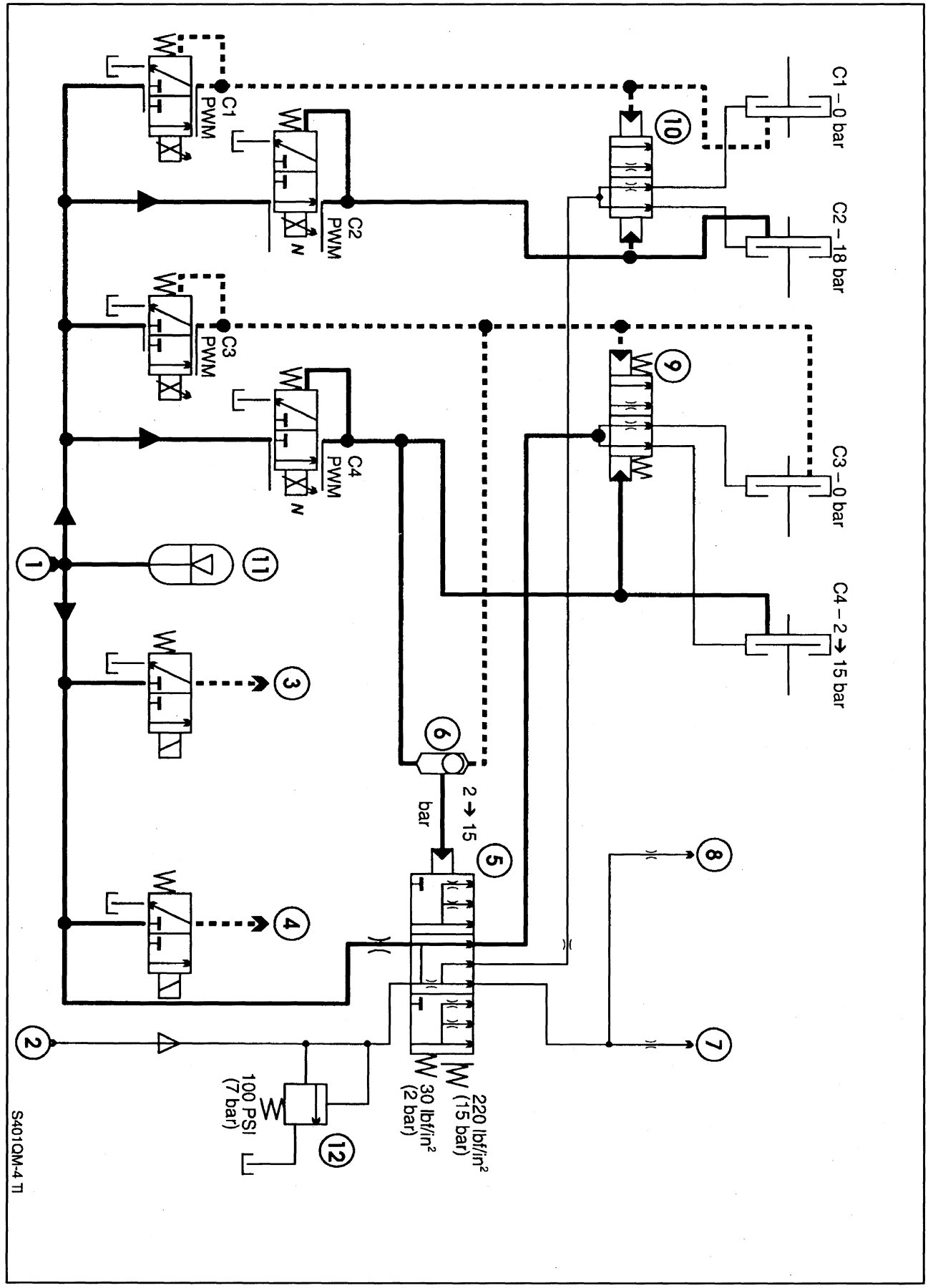
C1 – 0 bar
C2 – 18 bar
C3 – 0 bar
C4 – 2 → 15 bar
C1 PWM
C2 PWM
C3 PWM
C4 PWM
N
2 → 15 bar
220 lbf/in² (15 bar)
30 lbf/in² (2 bar)
100 PSI (7 bar)
S401QM-4 TI

TRANSMISSION HYDRAULIC CIRCUIT SCHEMATIC - SPEED 1 SELECTED, INCHING PEDAL FULLY RELEASED

- As the inching pedal is fully released C4 PWM valve is fully energised.
- When C4 clutch apply pressure increases above 15 bar the lubrication combining valve is moved fully to the right. Pressure regulated oil is no longer combined with lubrication oil. Transmission and PTO lubrication is restored.
- Clutch apply pressure increases to full pressure 17-19 bar.

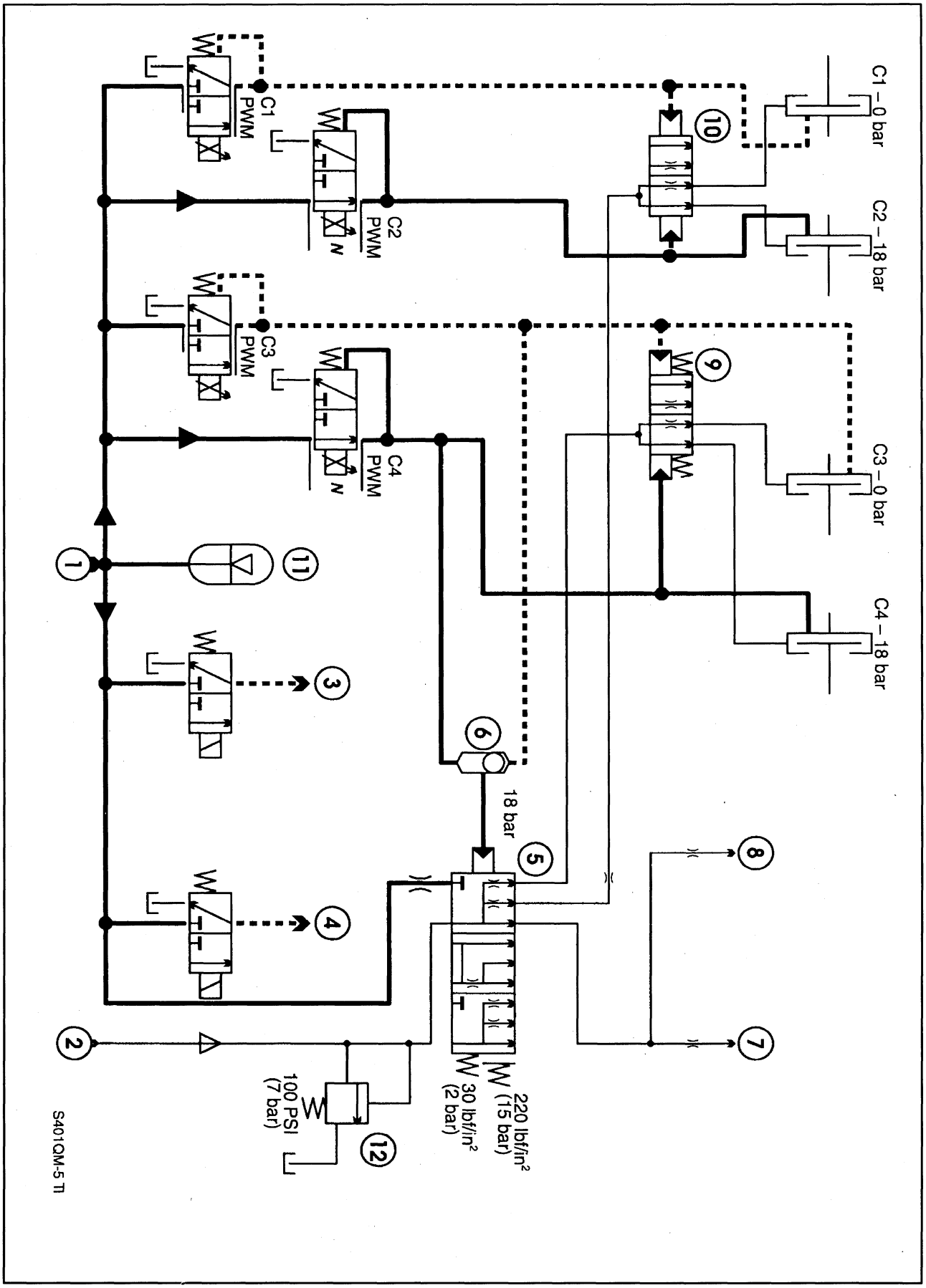
C1 – 0 bar
C2 – 18 bar
C3 – 0 bar
C4 – 18 bar
C1 PWM
C2 PWM
C3 PWM
C4 PWM
18 bar
220 lbf/in² (15 bar)
30 lbf/in² (2 bar)
100 PSI (7 bar)
S401QM-5 TI

TRANSMISSION GEAR DESCRIPTION

Gear	Description	Number of teeth	
		40 Kph	30 Kph
A	C1 Clutch Output Gear	34	
B	C2 Clutch Output Gear	26	
C	Creeper Driven Gear	55	
D	Front Bottom Shaft Gear	42	
E	Front Bottom Shaft Gear	48	
F	Front Bottom Shaft Gear (Creeper only)	20	
G	Reverse Gear	33	
H	Forward Gear and/or Coupler	37	
J	Low Main Gear	53	
K	Intermediate Bottom Shaft Gear	37	
L	Intermediate Bottom Shaft Gear	41	
M	Intermediate Bottom Shaft Gear	25	
N	C4 Clutch Output Gear	42	37
O	C3 Clutch (High) Output Gear	46	41
P	C3 Clutch (Low) Output Gear	22	
R	Output Gear	37	43
R1	Reverse Idler Gear	31	
S	Output Gear	33	39
T	Low Range Output Gear	65	
U	Output to FWD	29	
V	FWD Internal Shaft Rear Gear	26	
X	FWD Internal Shaft Front Gear	26	
Y	FWD Transfer Assembly Driven Gear	37 or 38	

C1 is Clutch C1 C2 is Clutch C2 C3 is Clutch C3 C4 is Clutch C4

See the figure at the end of this section.

TROUBLE SHOOTING, LIMP HOME, CALIBRATIONS AND PRESSURE TESTING

The transmission / EDC electronic management system has an inbuilt self diagnostic facility which is able to store up to 30 different errors with the hours of occurence. This facility utilises the digital display of either the EIC or AEIC instrument panels to indicate, in coded format, any malfunction in the electrical and electronic circuitry and in the processor.

It should be noted that the self diagnostic capability is generally limited to diagnosis of the electrical and electronic circuitry and related components, however, there are some codes, which can be generated if pressure switch circuits are not closed because of an actual lack of hydraulic pressure.

Any malfunction of the mechanical and hydraulic components must be diagnosed using conventional techniques, performance characteristics and tooling, such as pressure testing equipment. Full guidance for both electrical self diagnosis and conventional diagnosis is con

Trouble-shooting and fault finding should always be carried out in a logical and planned sequence, many apparent faults associated with electronic components are often hastily diagnosed and result in the replacement of expensive components. An extra few minutes confirming the apparent fault will result in a more positive and cost effective repair.

Prior to detailed fault finding, items like the ground points and Battery should be cleaned and tested to ensure that they are functioning correctly.

With the use of micro-processors it is often that this item is blamed for any malfunction but the real truth is that this item is usually sound and that the fault is due to poor contacts in the associated connectors.

Each connector illustrated and identified in the wiring diagrams in Section 3 and referred to in the following fault finding procedure, has the same identification reference. For example, the main processor connectors are referred to as Connectors C127 and C128 in the illustration and also referred to as C127 and C128 in the fault finding procedure. Often in the fault finding flow chart the connector and pin are abbreviated and will read, for example, C127-10. The C127 refers to the connector and the 10 to the pin number.

Section 3 contains complete wiring diagrams, connector identifications and a list of circuit numbers as used within the circuit diagrams.

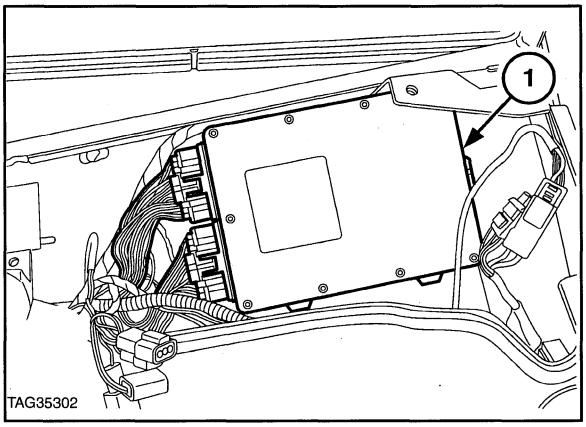

58

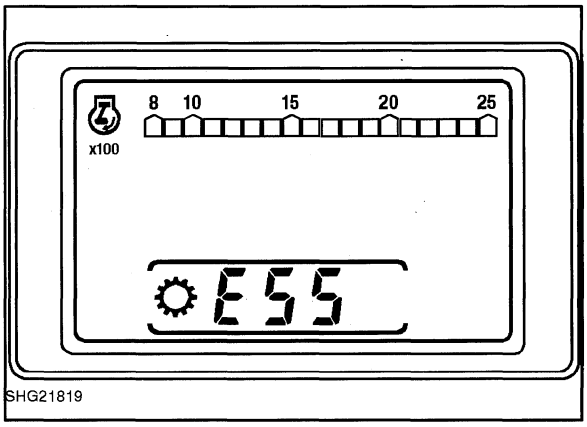

59

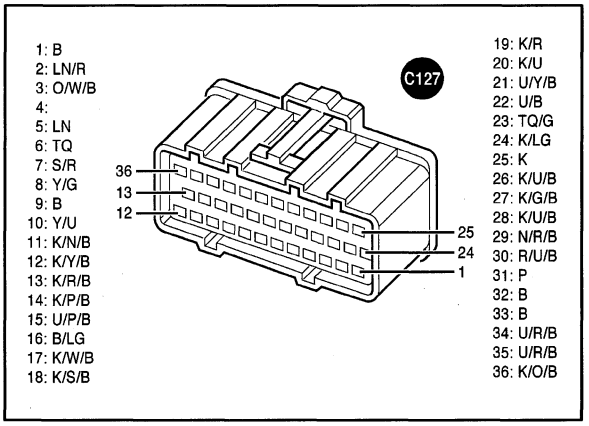

60

Where the fault finding procedure requires checks for continuity a visual inspection of the wiring should be made prior to conducting tests to ensure that obvious 'mechanical' damage has not occurred to the harness or the connectors.

Where possible the inbuilt tractor diagnostics should be utilised to determine the area of the fault.

The 'H' menu mode, described in Section 55, provides several modes to aid diagnosing faults. One particular mode which should be used, before any connections are split, is the H5, switch diagnostics mode. This will provide testing of many switch circuits, including the switch itself. If this mode highlights a fault within a circuit then more detailed fault finding can be directed towards a particular circuit.

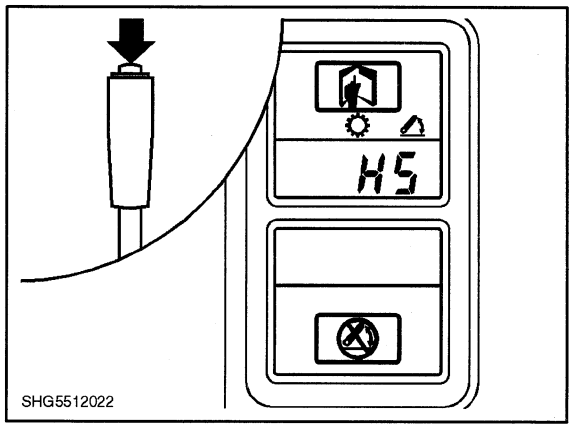

61

A good quality multi-meter is an essential item to perform fault finding. It should be capable of measuring resistance of at least 20,000 ohms and measuring voltage and current. When using the multi-meter it is good practice to select a high range and work downwards to avoid damaging the instrument.

Where possible it is recommended that connectors are probed from the rear, certain connectors like C079, C080 and C081, instrument panel connectors, should always be probed from the rear. Connector terminals should only be removed using the special tools supplied in electrical repair kit, Tool No.4FT.953 and the wires should not require excessive pulling efforts to remove.

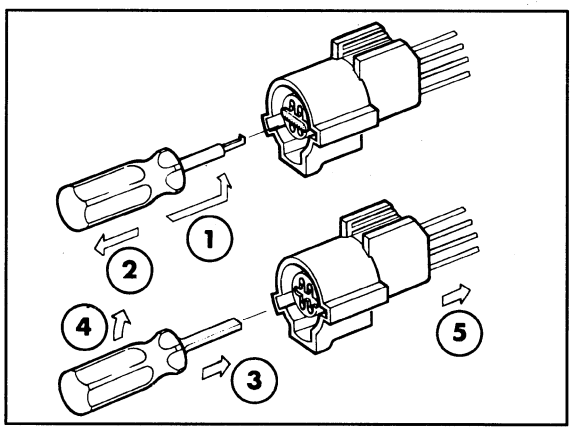

62

Where only front probing is practical it is recommended that Connector test probe kit, Tool No NH.55-125 is obtained. This provides all connector terminal attachments for use with most multi-meters.

IMPORTANT: *Care should be used when using the multi-meter, only use the instrument as instructed to avoid damage to the internal elements of the micro-processor. When checking the continuity of wiring, sensors or switches it is necessary to isolate the electronic micro-processor and ensure the keystart is turned off to prevent possible further damage. The keystart should only be switched on and the processor connected where specifically instructed in the fault finding procedure.*

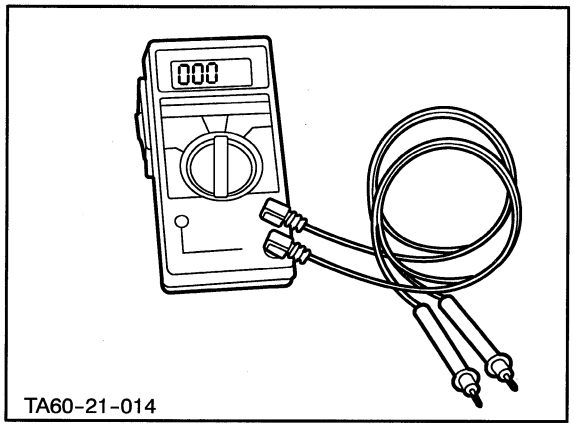

63

If it is found necessary to clean the connectors a contact spray should be used. DO NOT USE ANY OTHER METHOD FOR CLEANING TERMINALS. Do not use a cleaner that contains Trichloro-ethylene, this solvent will damage the plastic body of the connector. It is preferable to use a cleaner with a Freon T.F. base.

Limp Home Procedure

In the unlikely event of an electrical fault developing within the powershift transmission that renders the tractor immobile, for example, failure of the wiring or supply voltage to the PWM valves, the emergency 'Limp Home Harness', Special Tool No. FNH00375, is available to enable the tractor to be driven onto a transporter or hard standing, in order that the repair can be carried out in a suitable location. The Limp Home device **is not and must not** be used as a means to continue operating the tractor in its work environment.

To engage and operate the 'Limp Home Harness' proceed as follows:-

13. Apply the parking brake.

14. Stop the engine and turn keystart off

15. Disconnect all of the PWM valve connectors. Connect the Limp Home harness extension connectors to the C2 (1) and C3 (2) PWM valves.

16. Connect the other end of the Limp Home harness to the 'D1' diagnostic plug (1) located adjacent to the fuse box.

17. Place the range lever into **Low Range** and the main lever into the **1-4 Range.** Ensure the forward/reverse lever is in **Neutral.**

NOTE: *It is important that only the lowest ranges are used when operating with the Limp Home Harness due to the feathering capability of the transmission being inoperative.*

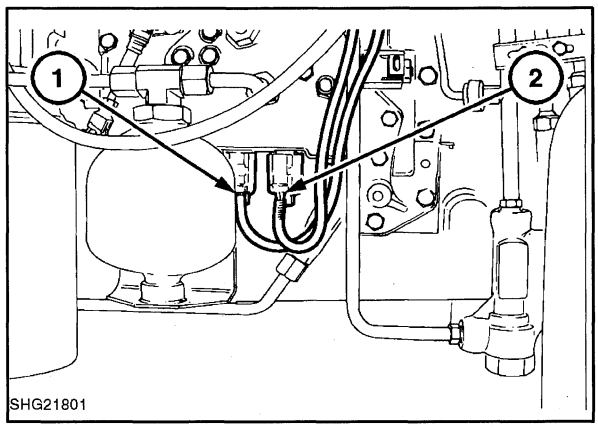

64

18. Start the vehicle.

19. Select forward or reverse.

20. Operate the momentary switch (2) of the Limp Home Harness to move the vehicle. If necessary, depress the foot throttle to increase engine speed.

21. When the tractor has been delivered to the repair area, disconnect the Limp Home Harness and reconnect the PWM valve connectors and proceed with diagnosing and repairing the fault.

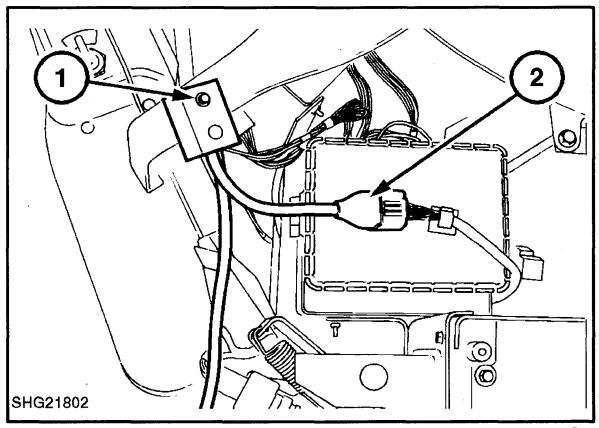

65

PRESSURE TESTING

Pressure ports are provided on the transmission control valve cover, detailed in Figure 68, to enable the transmission clutches, the creeper and the four wheel drive systems to be tested to determine the correct function of a number of system components. Components such as solenoids, clutch pedal operation and micro-processor can be seen to be operating correctly by the results of pressure testing.

NOTE: *Prior to pressure testing, make certain that all the points detailed under the tractor preparation are carried out to ensure maximum safety.*

Tractor Preparation

1. Start the tractor and run until the transmission oil has reached its normal operating temperature of at least 40°C (104°F).

2. Apply the handbrake and remove the FWD shaft.
3. Raise the right hand rear wheel and place a suitable support under the axle casing. Remove the right hand wheel.

4. Disconnect the grey connector to the low range switch and install 'Switch By-Pass Connector', Tool No. NH.21-115, into the tractor harness end. By installing the connector, the processor receives a signal indicating that low range is selected, although the **RANGE LEVER remains in NEUTRAL** throughout the testing.

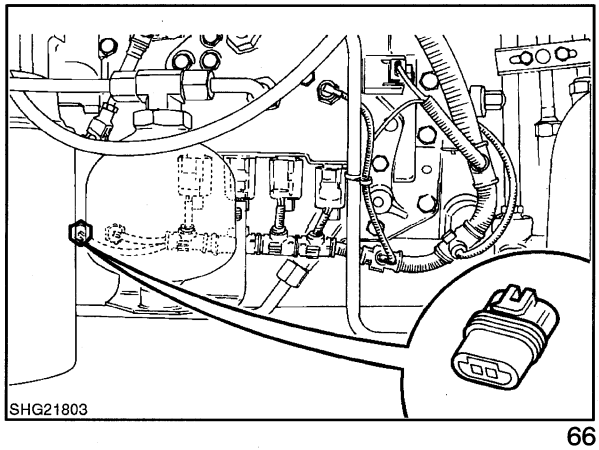

66

5. Disconnect the differential lock solenoid connector (1).

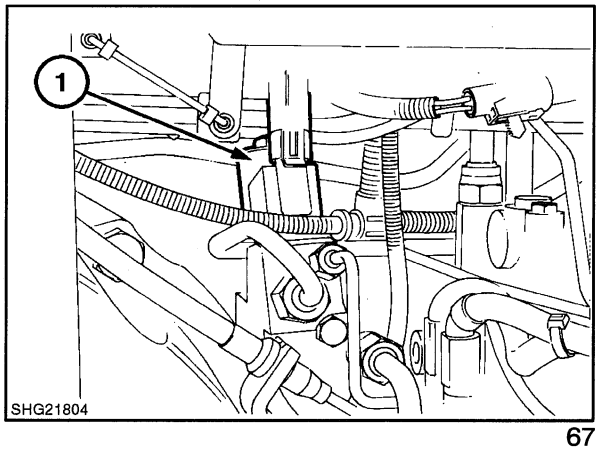

67

C1/C2 and C3/C4 Clutch Engagement and Disengagement

1. Install the pressure gauges. Ideally four gauges should be used, however, the testing can be carried out with two gauges using the following procedure:

- Connect to C1 and C2 test ports and carry out tests from powershift one through to four.
- Connect to C3 and C4 test ports and carry out tests from powershift one through to four.
- Connect to C2 and C3 test ports and carry out clutch feathering test.

2. Position the shuttle lever in **Forward,** the main lever into the **1-4 range** and leave the High/Low lever in **Neutral.** Set the engine speed to 1500 rev/min. Observe the reading on the gauges and compare with those in Table 1 as the gears are shifted and with those in Table 2 for the feathering tests.

Four Wheel Drive Pressure Testing (Follow previous tractor preparation. The FWD shaft must be removed).

1. Install gauge into FWD test port.
2. Disengage FWD, **DO NOT TOUCH FOOT BRAKES, shift all levers to neutral.** Start and run engine at 1500 rev/min. Pressure reading should be 18-20 bar.
3. Engage FWD, pressure reading should drop to zero.

Creeper Pressure Testing (Follow previous tractor preparation

1. Install gauge into creeper test port.
2. Shift all levers into neutral. Start engine and run at 1500 rev/min.
3. Depress the clutch pedal, engage low range and select creeper. The pressure reading should be between 18-20 bar.

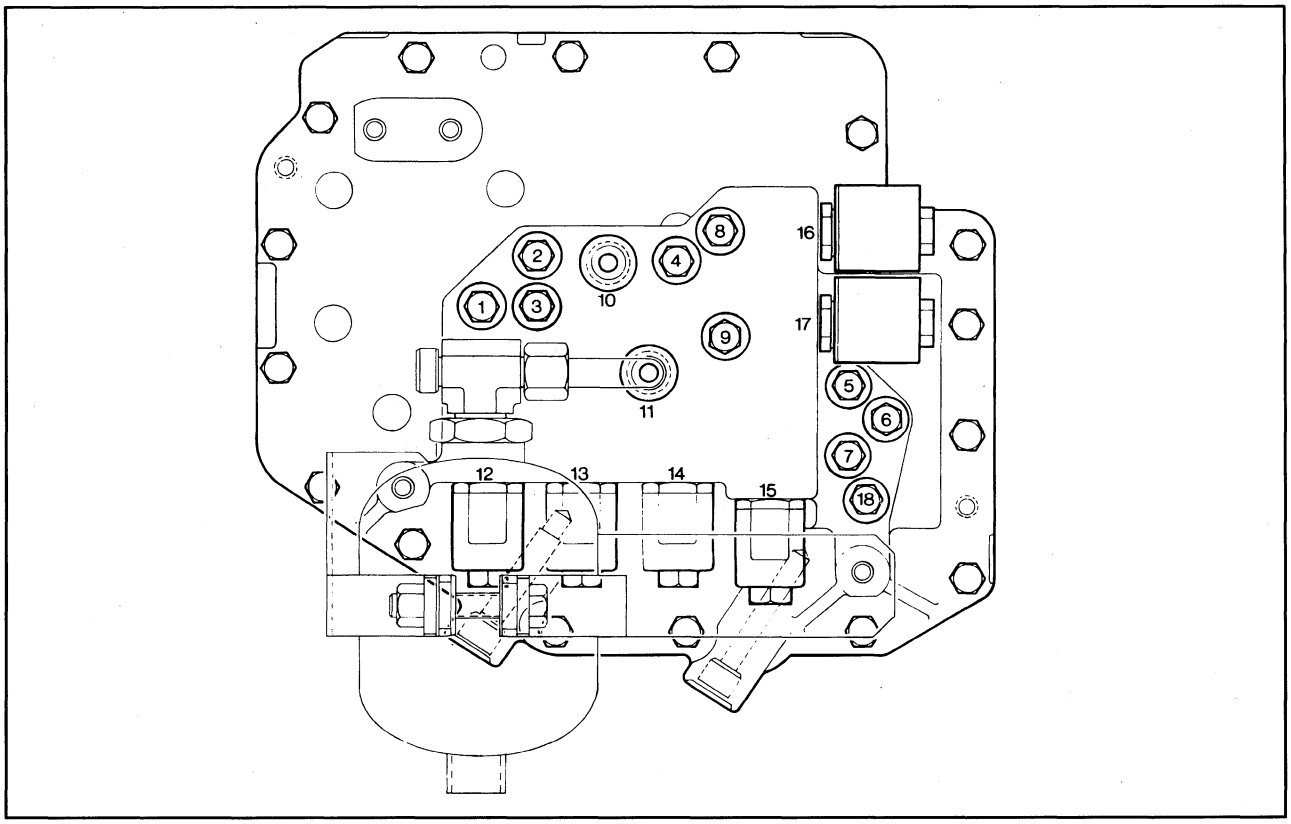

Figure 68

Pressure Test Ports
All Pressure Test Ports Accept $^{7}/_{16}$ inch JIC Fitting

1. C4 Pressure
2. C3 Pressure
3. C3/C4 Lube Pressure
4. Lube Supply Pressure
5. C2 Pressure
6. C1/C2 Lube Pressure
7. C1 Pressure
8. Creeper Pressure
9. FWD Pressure
10. Lube Inlet Connector
11. Regulated Pressure Inlet
12. C4 PWM Solenoid Valve
13. C3 PWM Solenoid Valve
14. C2 PWM Solenoid Valve
15. C1 PWM Solenoid Valve
16. Creeper Solenoid Valve
17. FWD Solenoid Valve
18. Transmission Bearing / Synchroniser Lube Pressure

Table 1 - Pressure Testing - Clutch PWM Solenoid Operation

Clutch / Gear	C1	C2	C3	C4	Observations
1	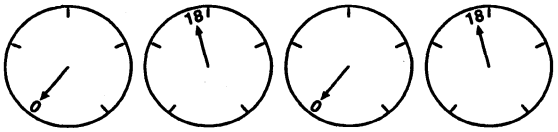				C2 and C4 at Full Pressure
1 → 2	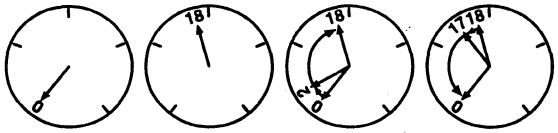				C2 Full Pressure C3 0 to 2 bar : 2 to 18 bar C4 18 to 17 bar ; 17 to 0 bar
2	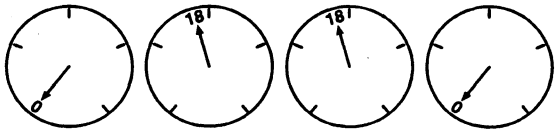				C2 and C3 at Full Pressure
2 → 3	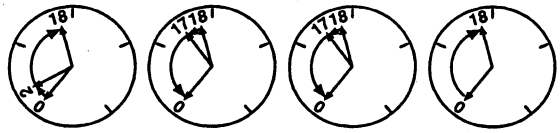				C1 0 to 2 bar : 2 to 18 bar C2/C3 18 to 17 bar : 17 to 0 bar C4 0 to 18 bar
3	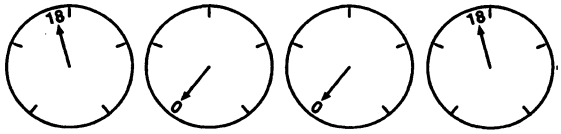				C1 and C4 at Full Pressure
3 → 4	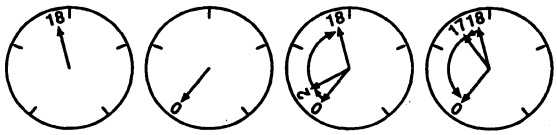				C1 Full Pressure C3 0 to 2 bar : 2 to 18 bar C4 18 to 17 bar : 17 to 0 bar
4	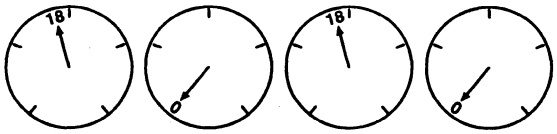				C1 and C3 at Full Pressure

Table 2 - Powershift 2 Selected - Clutch Feathering Tests

Clutch Pedal	C2	C3	Observations
			When clutch pedal is initially depressed Pressure in both C2 and C3 reduce from the fully engaged pressure by approximately 2 bar.
	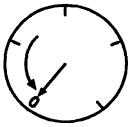	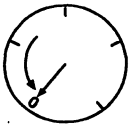	Fully depressing clutch pedal should zero C2/C3 pressures.
	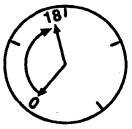	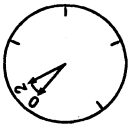	Releasing clutch pedal from fully depressed position should restore clutch 2 to full pressure, minus approx. 2bar and clutch 3 to feathering pressure.
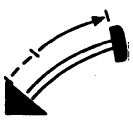	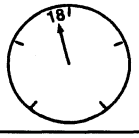	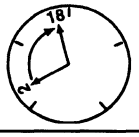	Pressure in C3 should progressively increase as clutch pedal is released indicating PWM valve and clutch potentiometer are functioning correctly.

Table 3 - Forward/Neutral/Reverse Shuttle Switch - 1st Powershift Selected

Switch Position	C1	C2	C3	C4	Observations
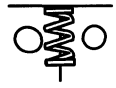	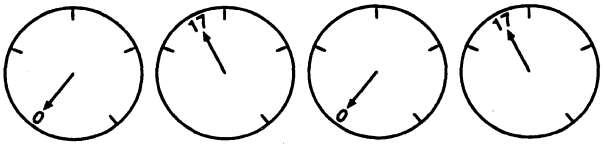				C2 and C4 at Full Pressure
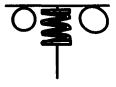	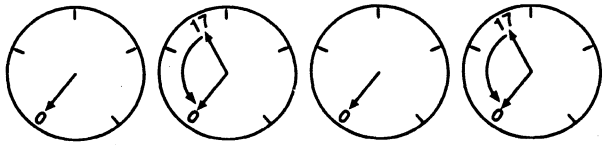				C2/C4 17 to 0 bar
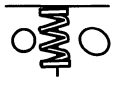	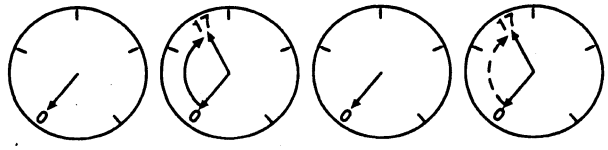				C2 Immediate full Pressure restored C4 Controlled engagement to full pressure

Table 4 - Powershift 1 Selected - Clutch Lube Tests

Clutch Pedal	C1/2 Lube	C3/4 Lube	C2	C4	Observations
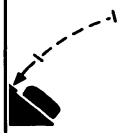	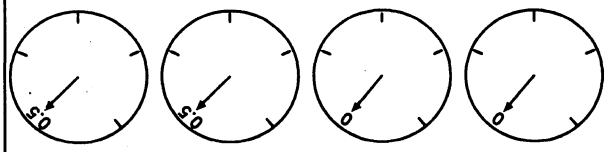				C2/C4 Zero pressure C1/C2 Lube Approx 0.5 bar C3/C4 Lube Approx 0.5 bar
	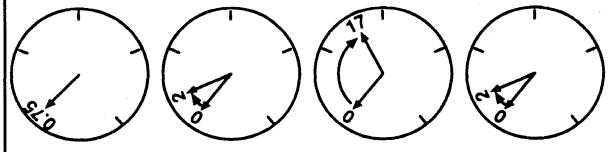				C2 Full pressure C4 0-2 bar C1/C2 Lube Approx 0.75 bar C3/C4 Lube Approx 2 bar
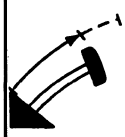	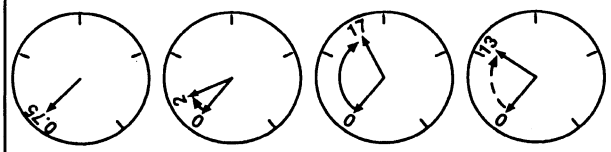				C2 Full pressure C4 Rising to Full pressure C1/C2 Lube Approx 0.75 bar C3/C4 Lube Approx 2 bar
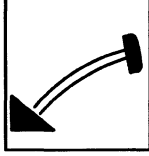	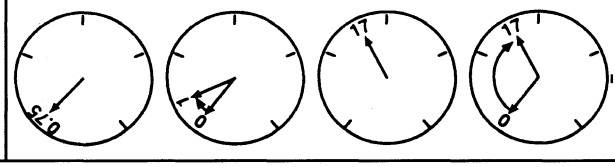				C2 Full pressure C4 Full pressure C1/C2 Lube Approx 0.75 bar C3/C4 Lube Reduced to 1 bar

TRANSMISSION CLUTCH CALIBRATION

Required when any of the following items have been performed or noticed:-

- The microprocessor has been replaced.
- The non volatile memory of the processor has been reset (Mode H8 Performed).
- A clutch PWM solenoid valve has been replaced.
- The shift quality or clutch featherability has noticeably deteriorated.

Set Up Procedure:

Prior to conducting a transmission clutch calibration, the following points should be checked.

- The temperature of the transmission oil is at normal working temperature.
- The parking brake is applied
- The air conditioning, if fitted, is switched off.
- All electrical and hydraulic services are deselected.

WARNING: *The calibration procedure is controlled by the electronic management system. To prevent inadvertent movement of the tractor. Park the tractor away from any obstacles, firmly apply the parking brake and block the wheels, front and rear.*

SPRING PRESSURE CALIBRATION

Entering the calibration mode :

Press and hold both the upshift and downshift buttons whilst starting the tractor.

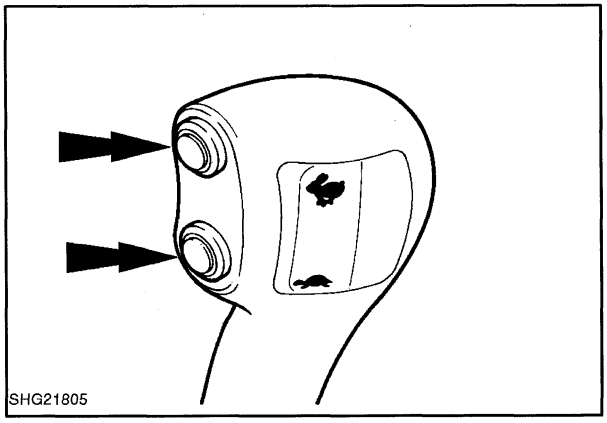

69

Alternative method :

Install diagnostic tool FNH00874 into the Black diagnostic connector, located by the fuse box.

Start the tractor.

Enter mode H1.

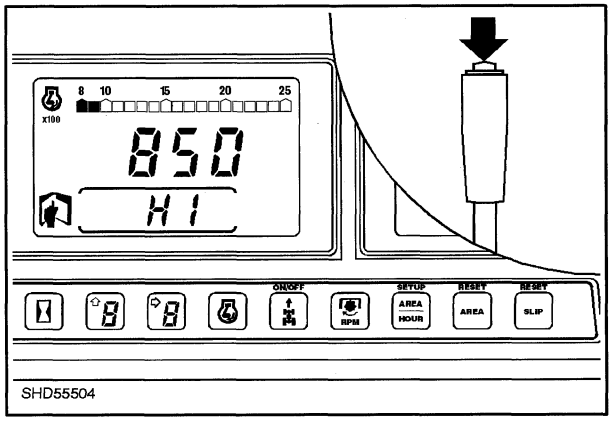

70

The word CAL should appear on the instrument cluster display. This will be replaced after a few seconds by the oil temperature, in degrees Celsius.

Set the engine speed to 1200 +/- 100 rpm.

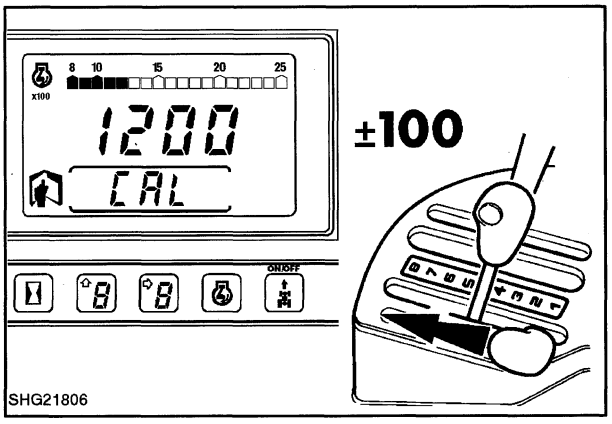

71

C3 and C4 Calibration

Place all gear levers in the forward position.

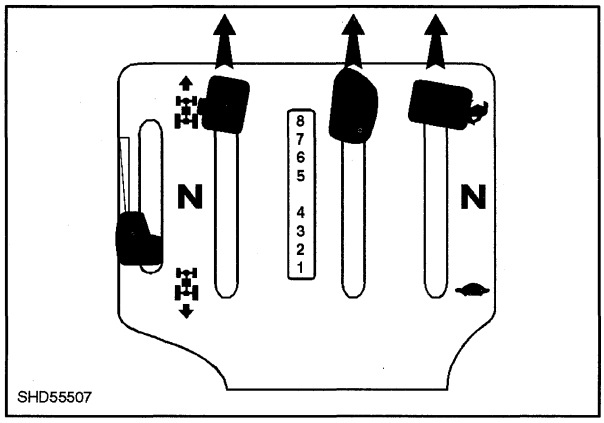

72

C3 calibration :

Press and hold the Upshift button.
If the start up procedure was incorrect, a U code will be displayed (see page 6-58).

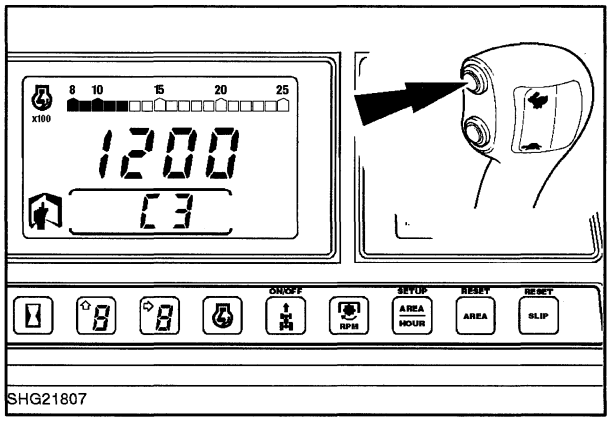

73

The display will change to show a number.
This number will flash and begin to scroll up, as the clutch is calibrated.
When the processor detects a decrease in engine rpm of 50, the calibration stops. This is indicated by a fixed, non flashing number.
Release the Upshift button.

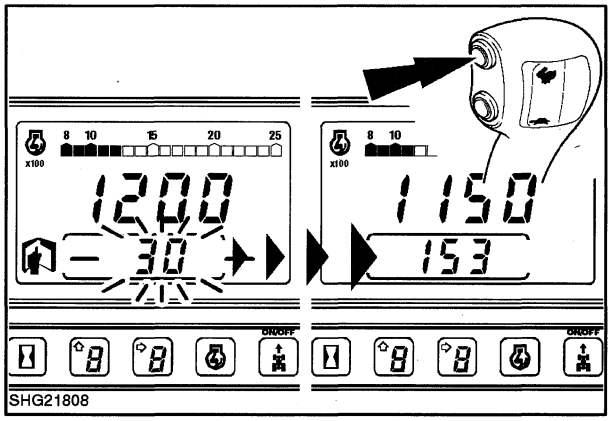

74

C4 calibration :

Use the downshift button to calibrate the C4 clutch in the same manor as the C3 clutch.

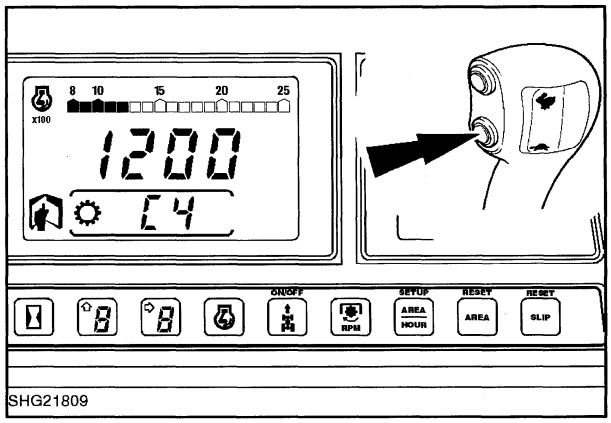

75

The display is similar to the C3 calibration.

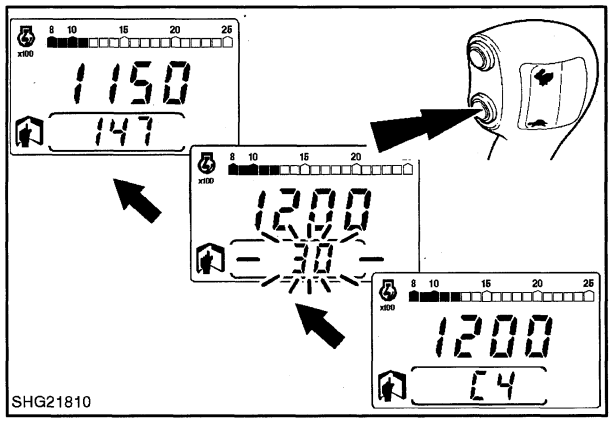

76

C1 and C2 calibration :

Depress the clutch pedal.

Place the range lever in neutral, leaving the shuttle lever and the main lever in the forward position.

Release the clutch pedal.

Set the engine speed to 1200 +/- 100 rpm.

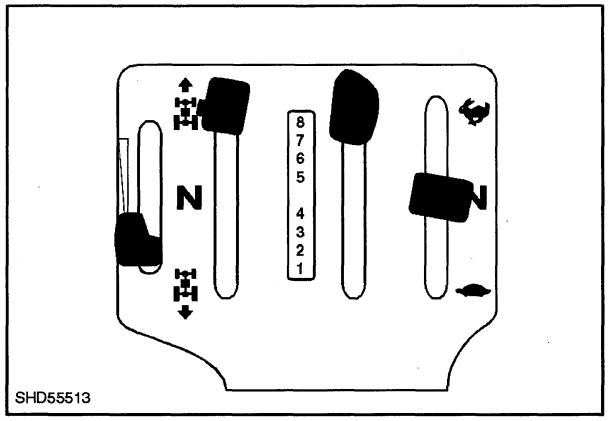

77

Press and hold the Upshift button to calibrate the C1 clutch.
Press and hold the Downshift button to calibrate the C2 clutch.
The procedure is the same as that for the C3 and C4 clutches.

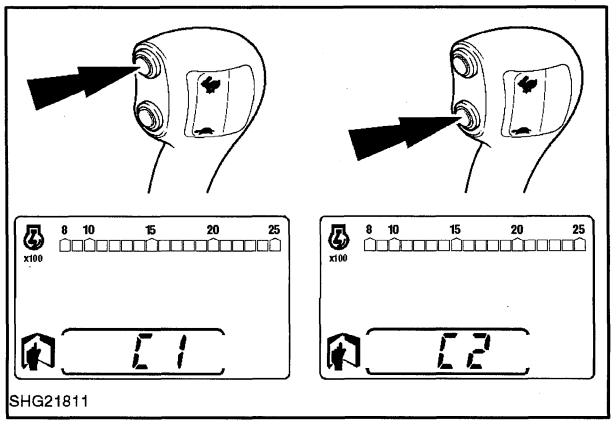

78

Spring Pressure Calibration Error Codes :

U20	-	Correct start up sequence was not used.
U21	-	Engine rpm too low
U22	-	Engine rpm too high
U23	-	Forward / Reverse shuttle lever is not in Forward
U24	-	Main lever is not in 5-8 range
U25	-	Range lever is not in high range
U26	-	Clutch pedal is not fully released
U27	-	C3 calibration too low
U28	-	C3 calibration too high
U29	-	C4 calibration too low
U30	-	C4 calibration too high
U31	-	Wheel motion detected during calibration
U32	-	C1 calibration too low
U33	-	C1 calibration too high
U34	-	C2 calibration too low
U35	-	C2 calibration too high

CLUTCH FILL TIME CALIBRATION

Set up procedure:

- Warm the oil to normal operating temperature, at least 60°C.
- Park the tractor on a level surface. Allow some space as the tractor will move when testing clutches 3 and 4.
- with a diagnostic tool installed start the engine and set engine speed to 1200 +/- 100 rpm.

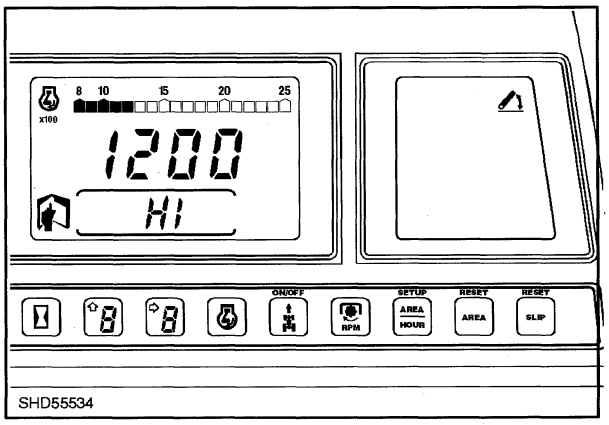

79

Entering the calibration mode :

Place the 4-5 (main) and range levers in neutral, place the shuttle lever in forward and release the clutch pedal.

Using diagnostic tool FNH00874 select mode **HE.**

If the oil temperature is less than 60°C '**F1**' will be displayed, alternating with the display of oil temperature. This will NOT stop until the oil reaches 60°C.

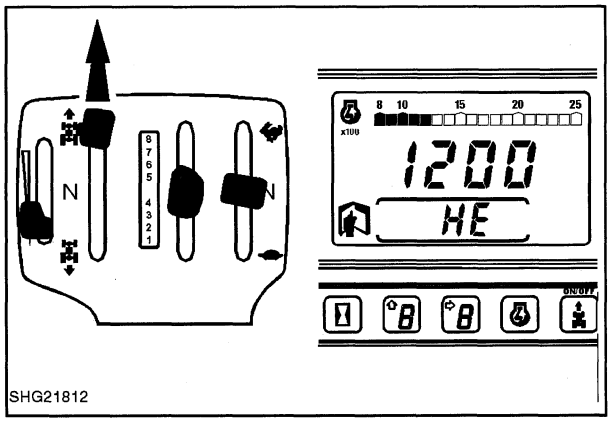

80

CLUTCH SELECTION:
While the 4-5 lever is in neutral, the display will indicate which clutch is selected.

To select C1 or C2 the range lever must be in neutral.
To select C3 or C4 the range lever must be in the high range

To switch between C1 and C2 or C3 and C4, press the upshift or downshift switch while the 4-5 lever is in neutral.

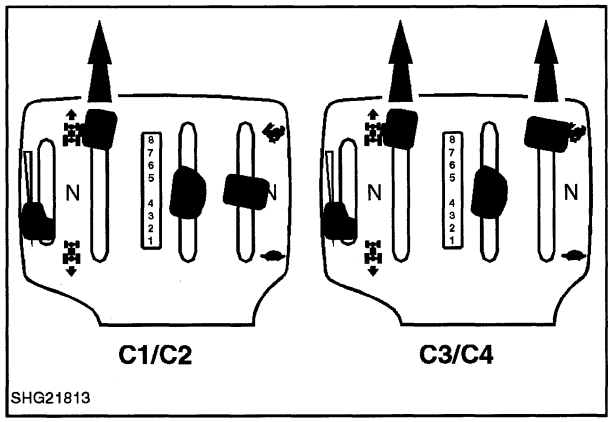

81

ADJUST AND TEST C1 OR C2

Shift the 4-5 lever into 5 (forward).

This display will show C1 or C2 and to the left of this a sequence of horizontal lines will appear to indicate a ramping up of pressure on the C3 and C4 clutches to prevent output rotation of the C1 and C2 clutches.

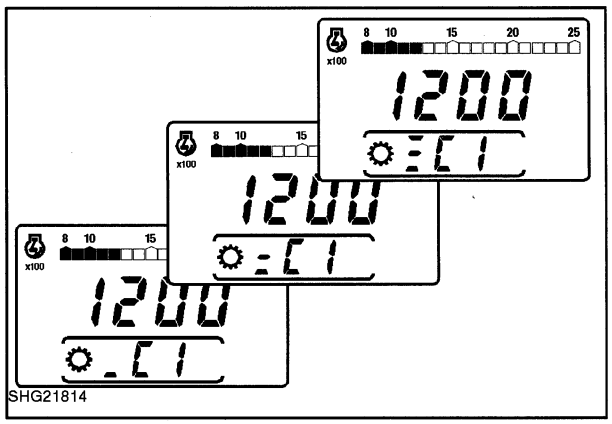

82

The display will then change to a single digit number which is indicating the quickfill time in 10 millisecond units.

This can be adjusted using the upshift and downshift switches.

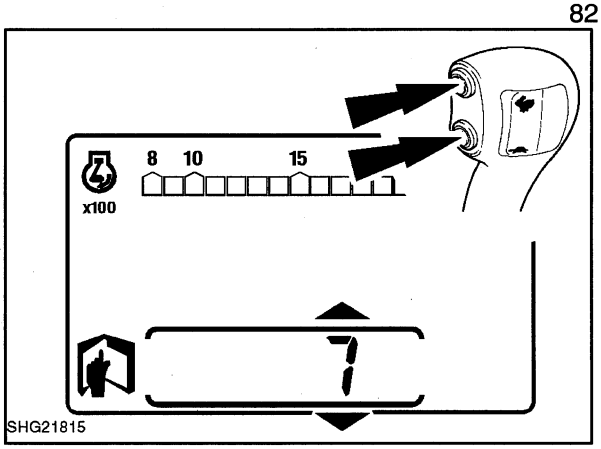

83

To test the quickfill setting, press and release the dump switch. The display will show 'Fill' and then return to the quickfill setting.

Listen to the clutch engagement 'Slap'.

Increase the value to a point where a 'slap' is just audible and then reduce the value by 2.

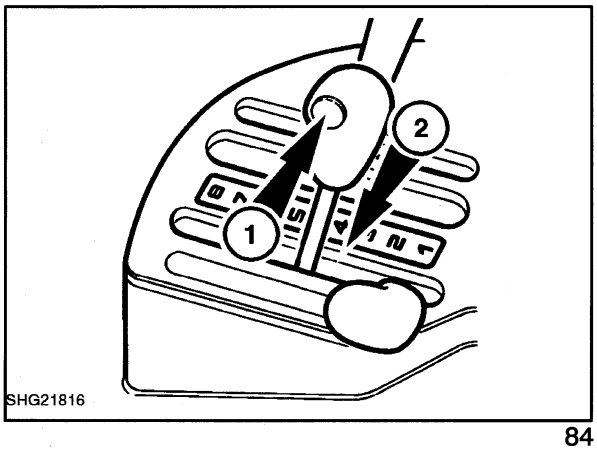

84

ADJUST AND TEST C3 OR C4

Ensure that the handbrake is OFF.

Shift the range lever into the high range.

Shift the 4-5 lever into 5 (forward) and release the clutch pedal.

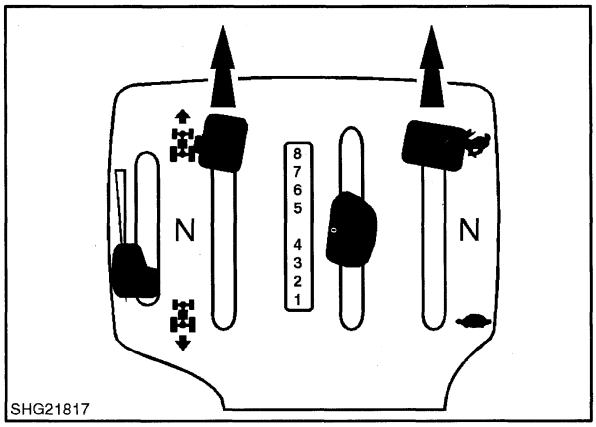

85

This display will show C3 or C4 and to the left of this a sequence of horizontal lines will appear to indicate a ramping up of pressure on C1 clutch to connect C3 and C4 to the engine.

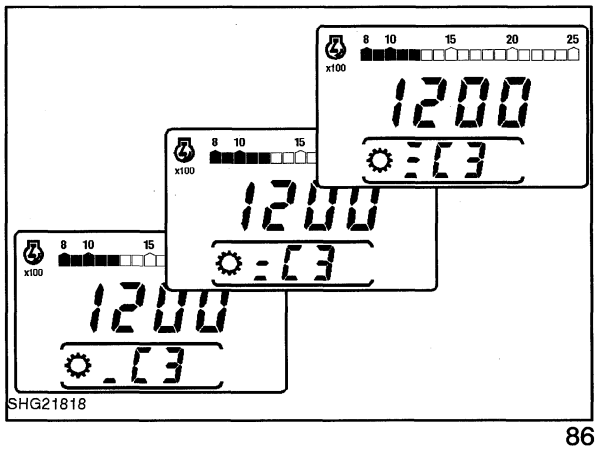

86

The display will then change to a single digit number which is indicating the quickfill time in 10 millisecond units.This can be adjusted using the upshift and downshift switches.

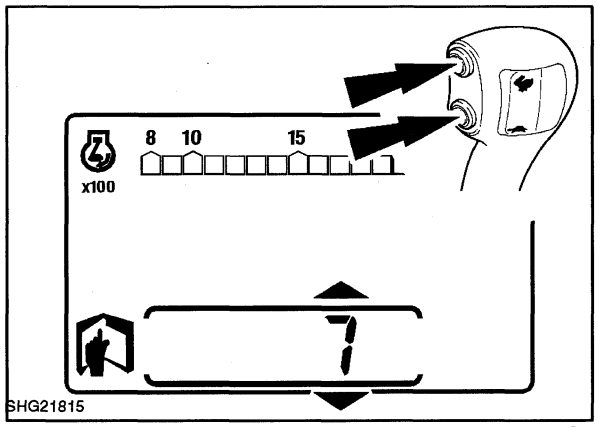

87

To test the quickfill setting, press and release the dump switch. The display will show 'Fill' and then briefly to the clutch selected then the quickfill setting.

As the dump switch is released the tractor should be felt to 'rock' as the clutch fills.

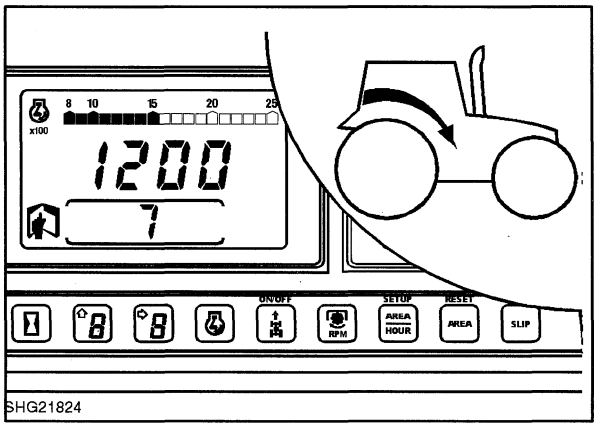

88

Adjust the fill time until the rock is barely noticeable, then reduce the value by 2.

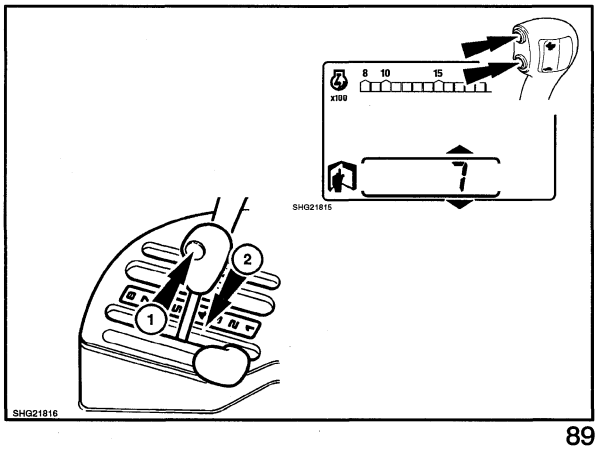

89

ERROR CODES

The transmission / EDC processor is able to create and store up to 30 error codes with the hours at which they occured and with the number of incidences that a particular error code has occured. Only error codes that prevent the tractor from driving will be displayed to the operator, other non disabling errors will be retreivable by a technician through the H menu mode of the tractor diagnostics.

It should be noted that the hours displayed is not related directly to the hour meter. For example if the occurence hours shows '10' this indicates that the error occured 10 hours ago, not at 10 hours of operation.

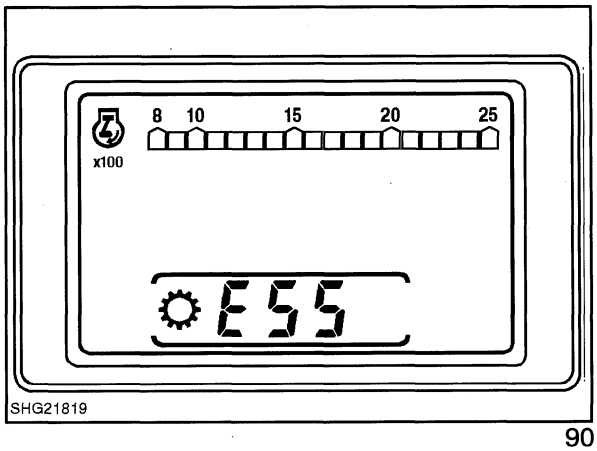

90

The following 'H' menu mode routines are provided to allow access to Error codes:

Hb - Retrieve error codes for viewing.

Hc - Clear processor memory of stored error codes

Hd - View error codes live. This allows normal operation of the tractor with error codes able to display as they occur.

A full description of the 'H' menu routines can be found in Section 55.

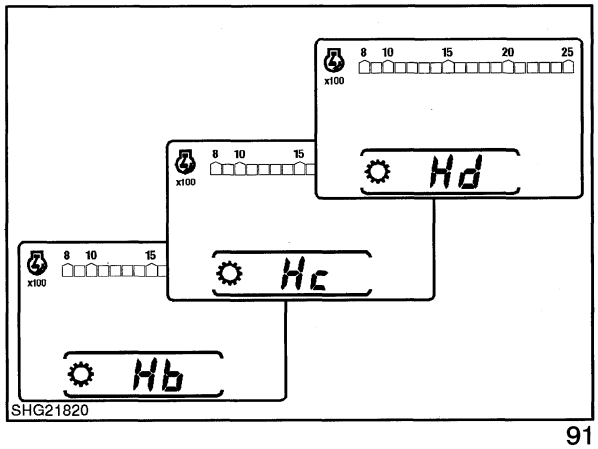

91

It should also be noted that after installation of a new processor or after a non volatile memory reset operation ('H' menu mode, H8), that the processor defaults to a 'display all codes' mode for 6 minutes. If no error codes occur during this 6 minute period the processor then reverts to normal operation. If an error occurs during this period the processor will continue to display 'live' error codes until all the errors are removed.

16x16 Electroshift Transmission Error Codes

Error	Fault Condition	Priority	Enabled/ Disable?	Error Displayed?
E21	Chassis harness disconnected	1	Disable	Yes
E53	5 Volt Reference failed, shorted to 12 volts	2	Disable	Yes
E54	5 Volt Reference failed, shorted to ground	3	Disable	Yes
E12	Clutch pedal potentiometer signal too high	4	Disable	Yes
E11	Clutch pedal potentiometer signal too low	5	Disable	Yes
E39	C4 clutch solenoid open circuit	6	Disable	Yes
E38	C4 clutch solenoid short circuit	7	Disable	Yes
E41	C3 clutch solenoid open circuit	8	Disable	Yes
E40	C3 clutch solenoid short circuit	9	Disable	Yes
E43	C2 clutch solenoid open circuit	10	Disable	Yes
E42	C2 clutch solenoid short circuit	11	Disable	Yes
E45	C1 clutch solenoid open circuit	12	Disable	Yes
E44	C1 clutch solenoid short circuit	13	Disable	Yes
C	Wheel speed too high for creeper gear	14	Recover	Yes
HC	Range shift to high with creeper engaged	15	Recover	Yes
E37	Clutch disconnect switch open circuit	16	Disable	Yes
E48	Clutch disconnect switch short circuit misadjusted, always closed	17	Disable	Yes
CP	Depress clutch pedal to enable transmission	18	Recover	Yes
N	Clutchless shuttle operation attempted at too high a speed and in too high a gear	19	Enabled	Yes
E46	Fuse 12 blown	20	Enabled	No
E47	Clutch disconnect switch misadjusted high	21	Enabled	No
E51	Transmission temperature sensor open circuit	22	Enabled	No
E52	Transmission temperature sensor short circuit	23	Enabled	No
E24	All clutches not calibrated	24	Enabled	No
EC4	C4 clutch not calibrated	25	Enabled	No
EC3	C3 clutch not calibrated	26	Enabled	No
EC2	C2 clutch not calibrated	27	Enabled	No
EC1	C1 clutch not calibrated	28	Enabled	No
E16	Creeper solenoid open/short circuit, or attempt was made to engage creeper after prior creeper error	29	Enabled	No
E15	High/low range lever switches both on	30	Enabled	No
E14	1-4/5-8 Range lever switches both on	31	Enabled	No
E55	No output speed signal	32	Enabled	No
E56	Differential lock switch error	33	Enabled	No
E49	Wheel speed sensor circuit open or short circuit	34	Enabled	No
E26	Engine rev/min speed too high	35	Enabled	No
E27	Engine rev/min speed too low	36	Enabled	No

Key to Fault Finding Diagrams

Diagrams 1 to 10 - Not related to error codes

1. Tractor Does Not Drive In Any Gear
2. Incorrect Gear Shift Sequence or Gears Missing
3. Powershifts Jerky / Loss of Drive
4. Poor Clutch Feathering
5. Clutch Potentiometer Calibration Check

6 Holding in Gear / Jumping Out of Gear / Clashing

7. Creeper Does Not Disengage
8. Clutches Squeal / Whine During Inching
9. Transmission is Noisy in Operation
10. Transmission 'Clunks' During Inching

Diagrams 11 onwards, error code related:

11. Error Code E11
12. Error Code E12
13. Error Codes E53 and E54
14. Error Codes E37, E47 and E48
15. Error Codes E38,E39 / E40,E41 / E42,E43 / E44,E45
16. Error Codes C and E16 - Creeper Does Not Engage in Low Range
17. Error Code HC
18. Error Code CP
19. Error Code E46
20. Error Codes E51 and E52
21. Error Codes E24, EC4, EC3, EC2 and EC1
22. Error Code E15
23. Error Code E14
24. Error Code E55
25. Error Code E56
26. Error Code E49
27. Error Code E26
28. Error Code E27
29. Error Code Symbol 'N'

DIAGRAM 1 - Tractor does not drive (in any gear)

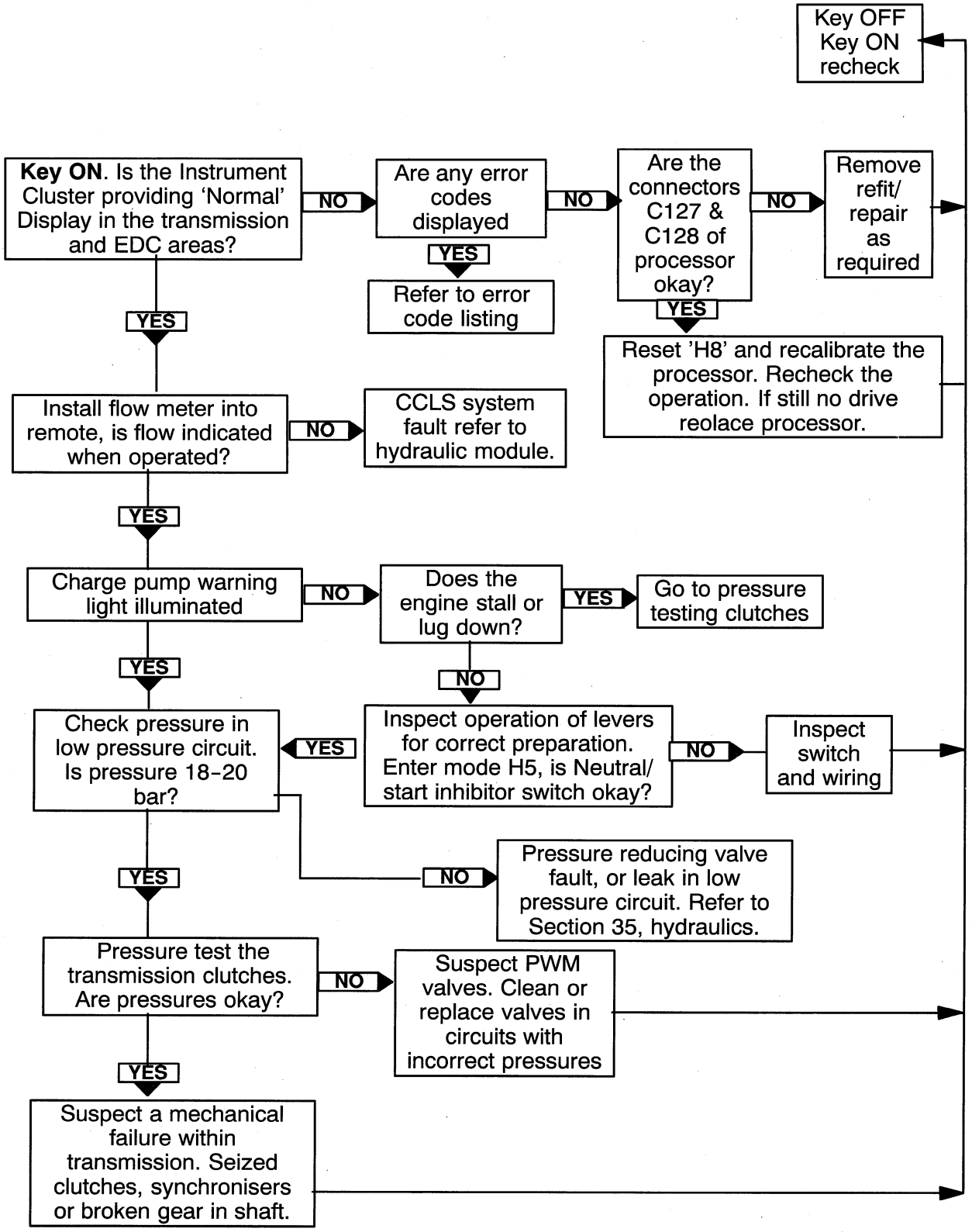

DIAGRAM 2 - Tractor drives in ranges but has following fault:

- Powershift function operates but the shift sequence is incorrect or gears missing

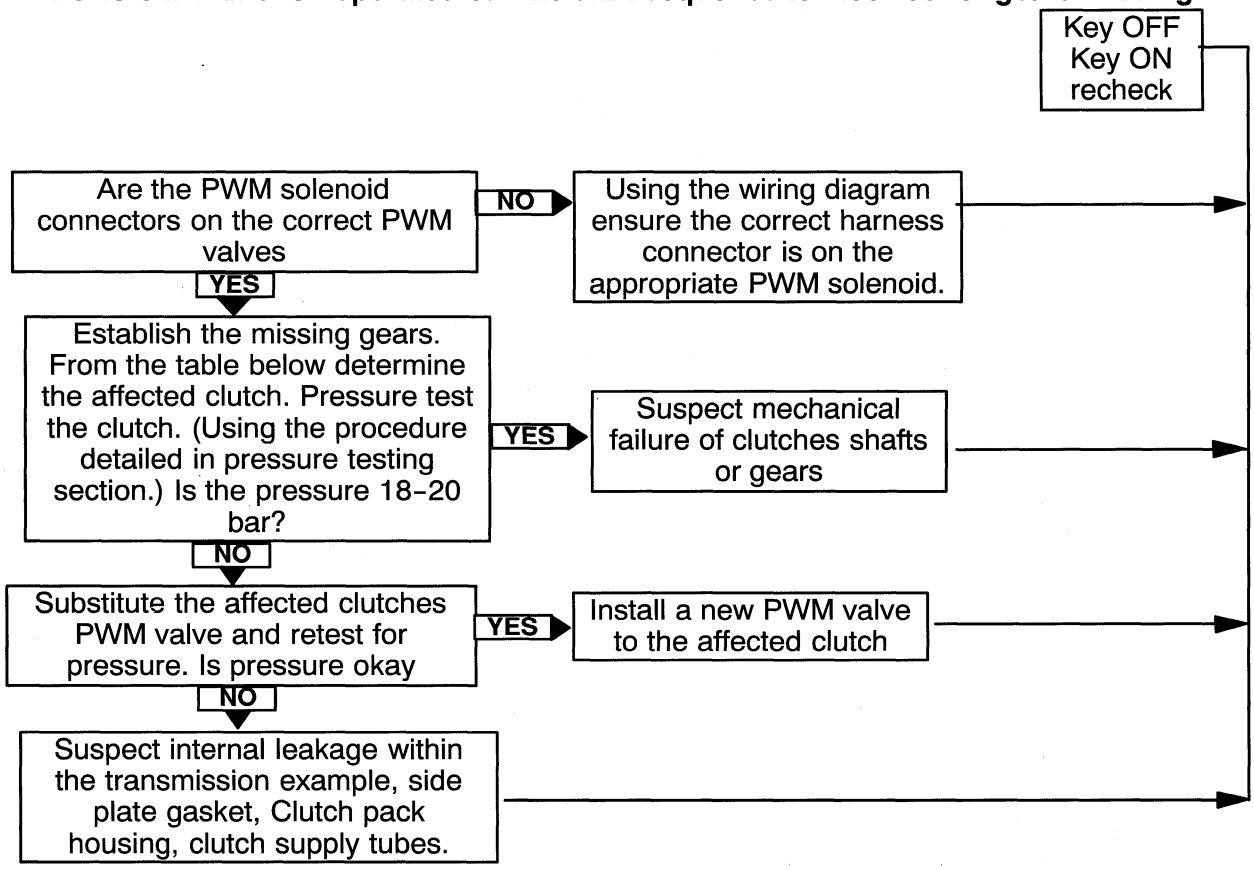

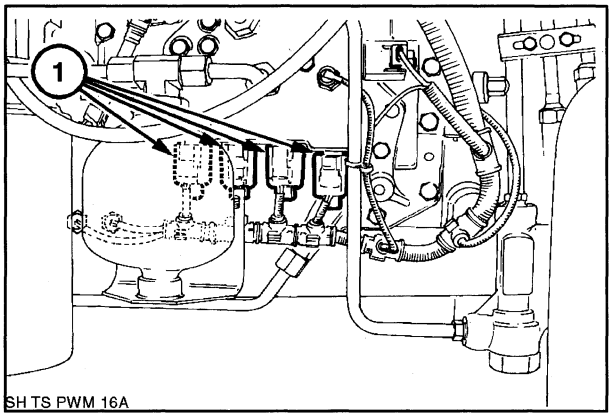

	C1	C2	C3	C4	
1-5		○		○	9-13
2-6		○	○		10-14
3-7	○			○	11-15
4-8	○		○		12-16

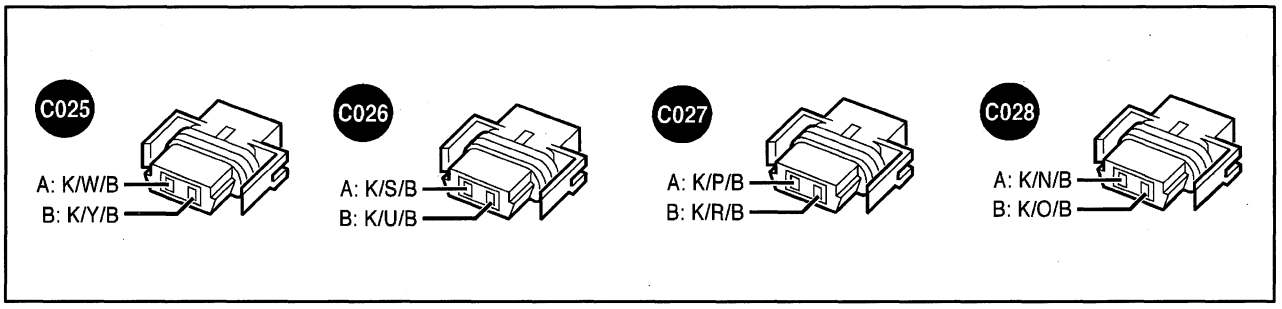

DIAGRAM 3 - The powershifts are not smooth or the tractor loses drive between powershifts (in work tractor stops or could be jerky)

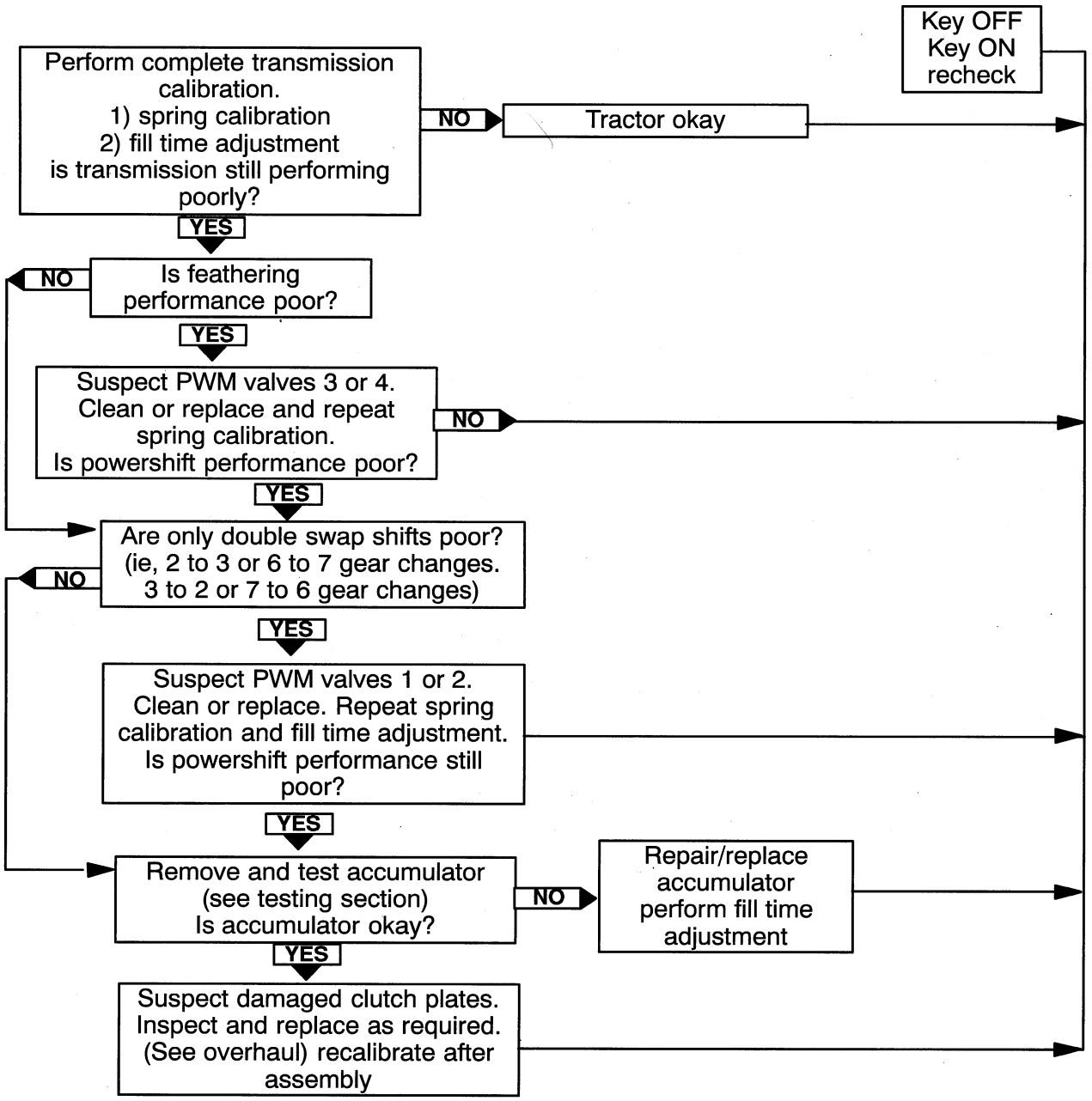

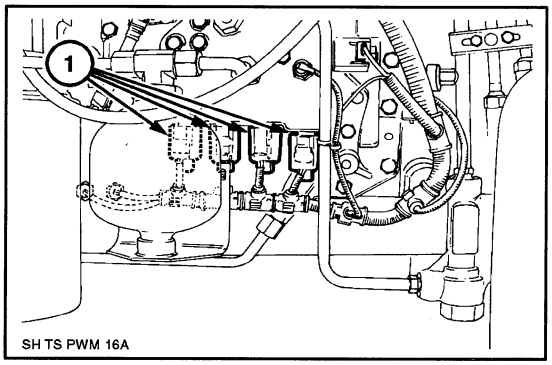

DIAGRAM 4 - The tractor drives in all gears but has the following fault
Poor clutch pedal feathering/inching performance.

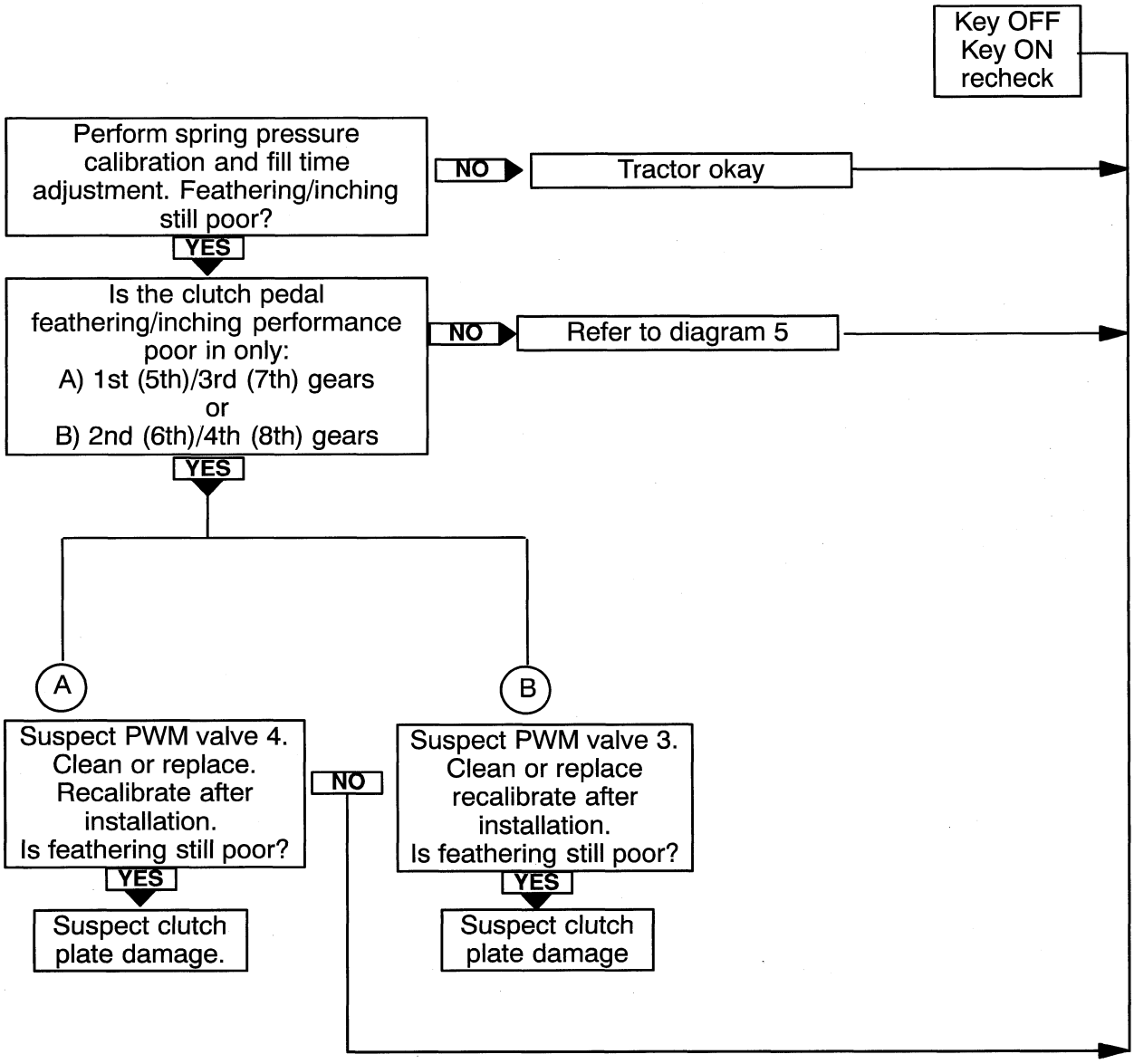

DIAGRAM 5 - Clutch pedal potentiometer calibration check

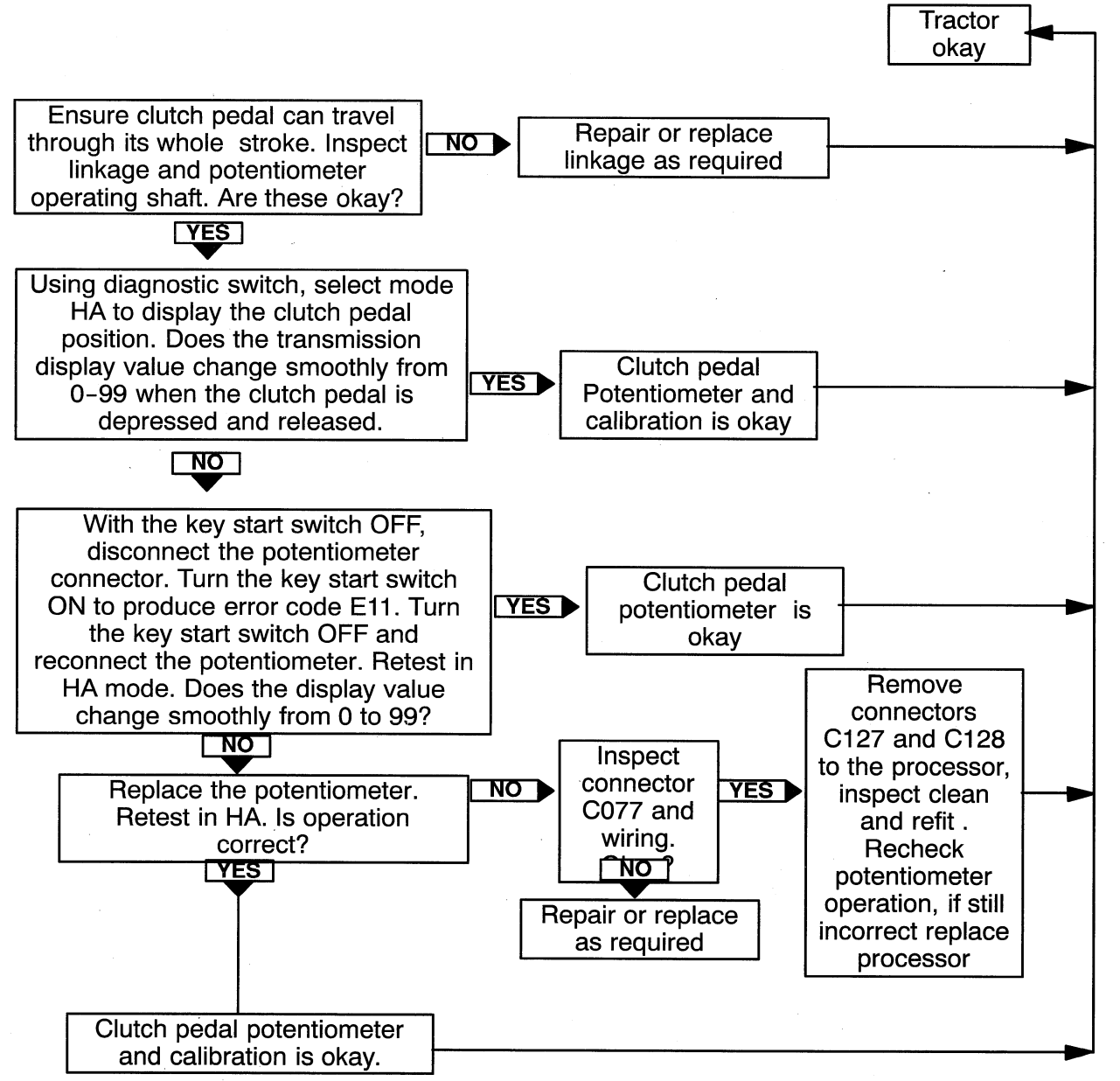

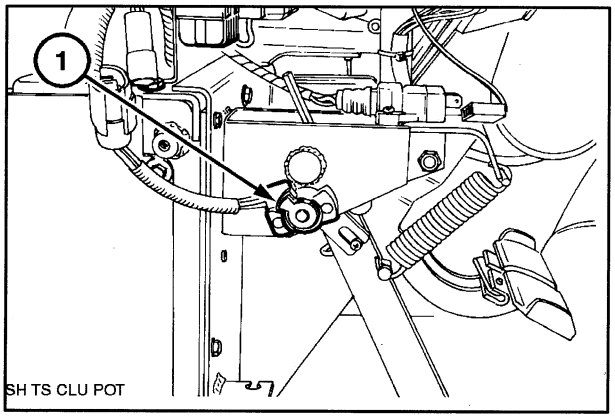

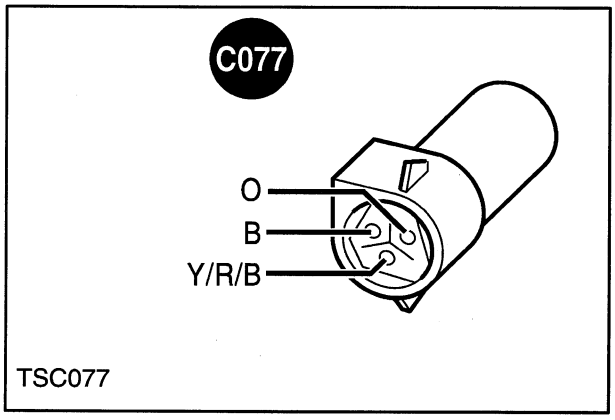

DIAGRAM 6: The tractor drives in all gears and ranges but has the following fault: Transmission jumps out of gear, holds in gear or gears clash when shifting

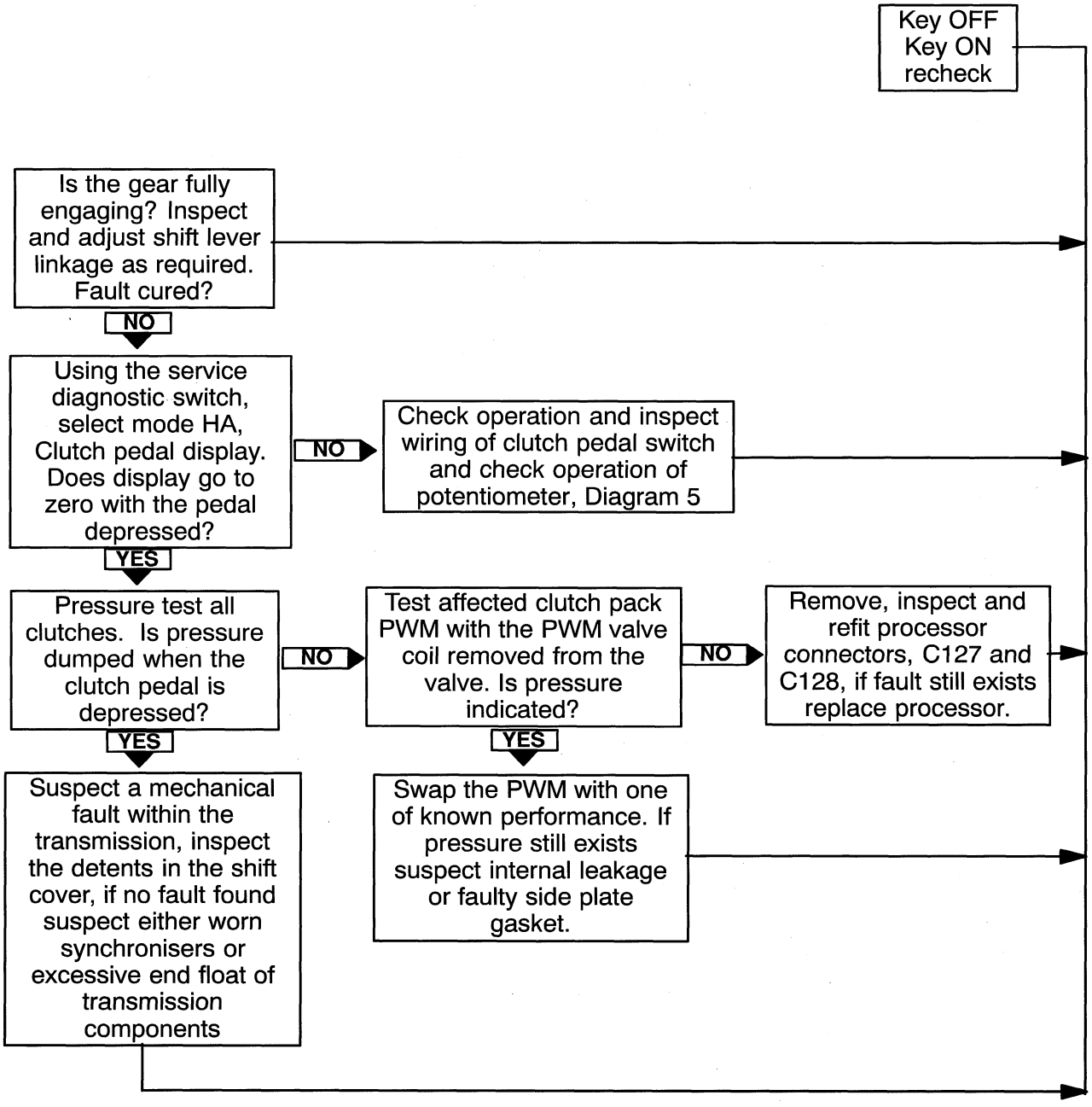

DIAGRAM 7 - The creeper does not disengage.

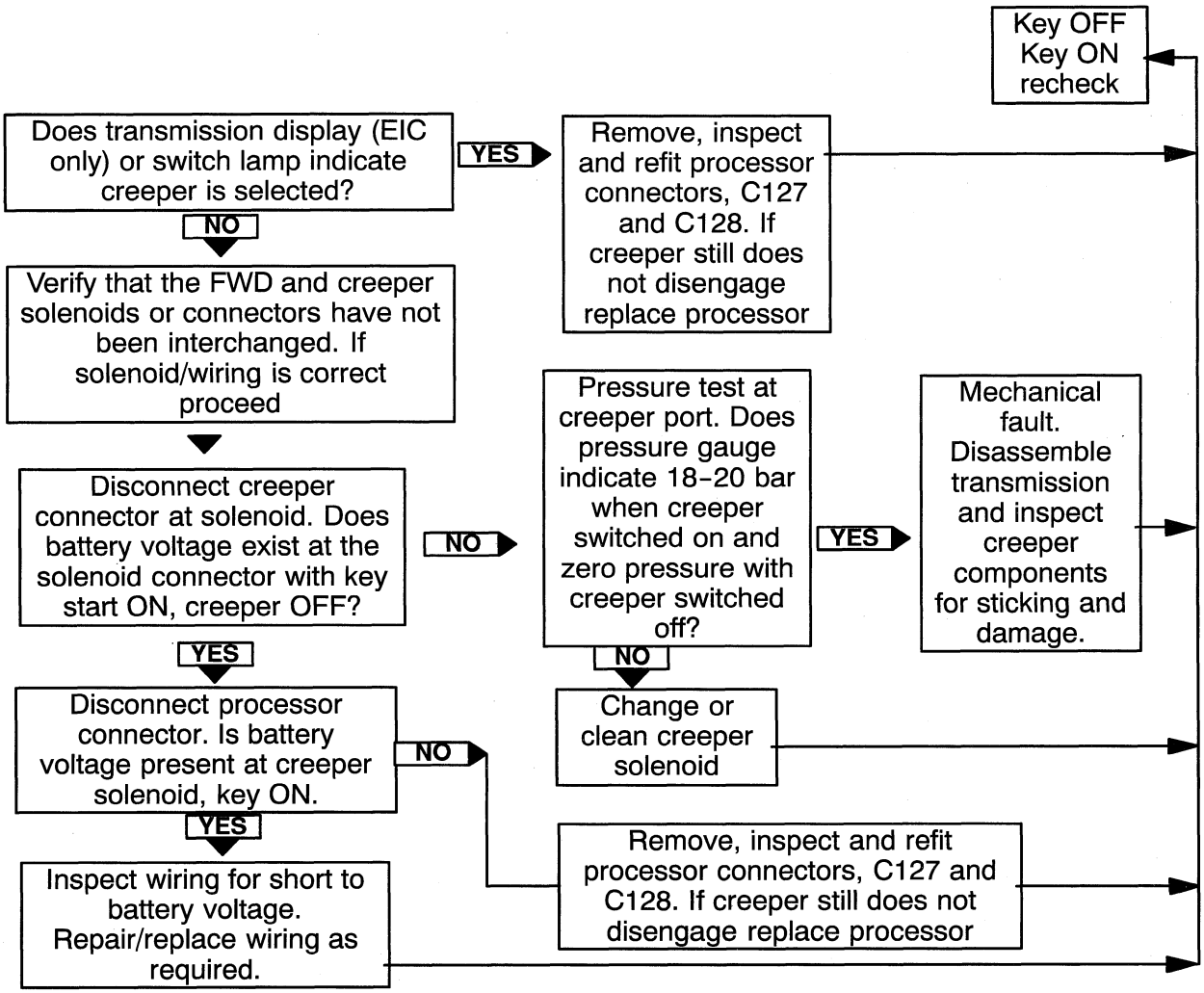

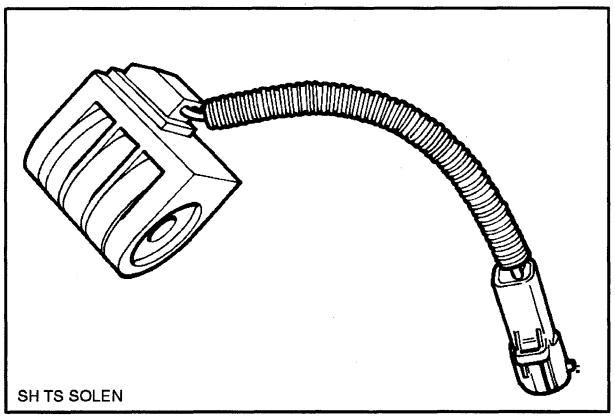

FLOW DIAGRAM 8: The tractor drives in all gears and ranges but has the following fault:

Clutches squeal/whine during inching

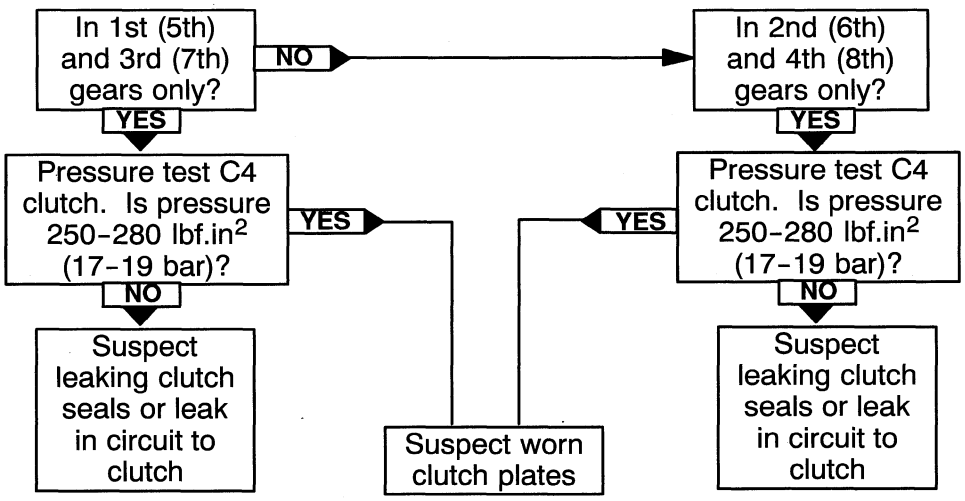

DIAGRAM 9: The tractor drives in all gears and in all ranges but has the following fault:

Transmission is noisy in operation

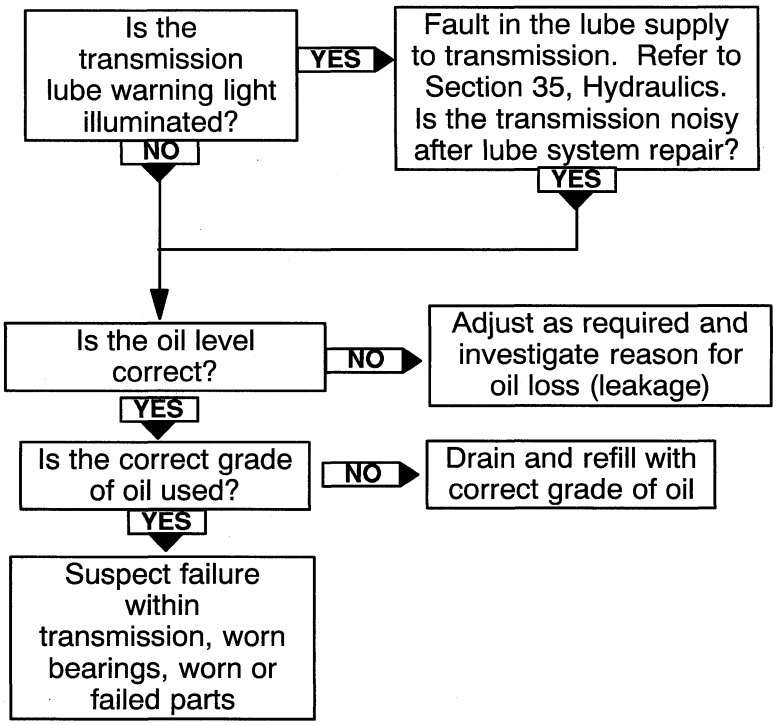

DIAGRAM 10: The tractor drives in all gears and ranges but has the following fault:

Transmission clunks during inching

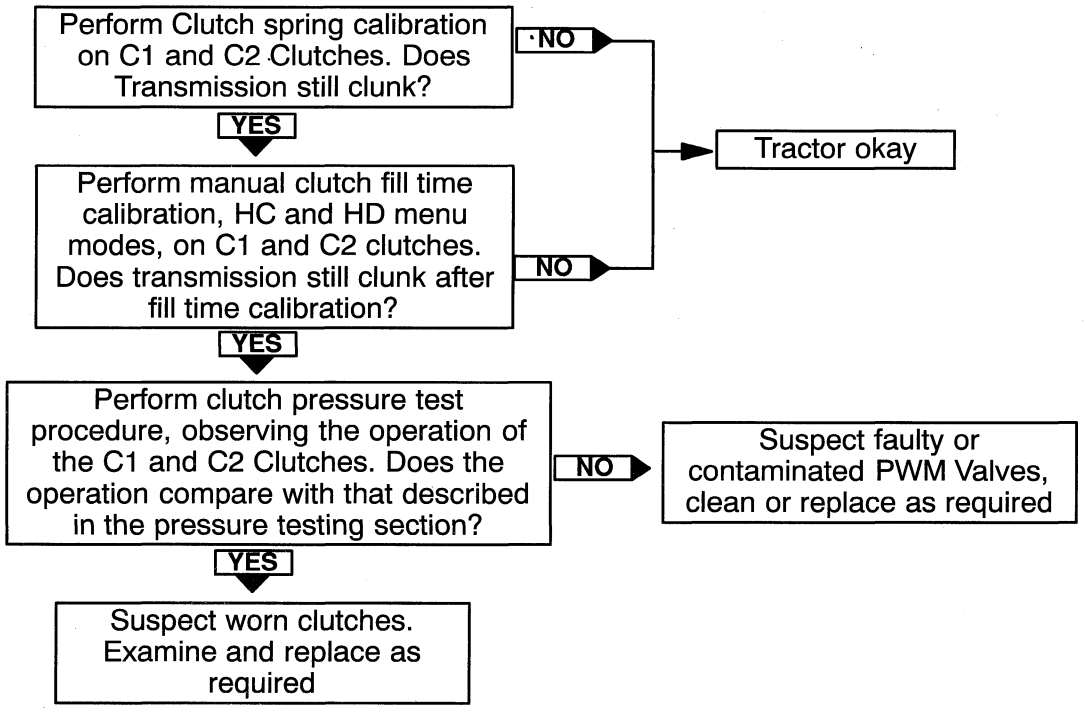

DIAGRAM 11 - Error Code E11

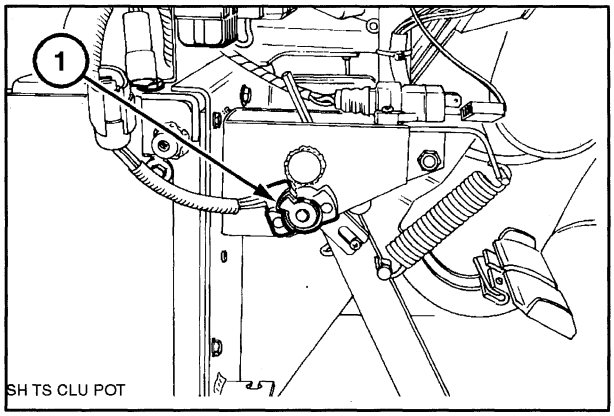

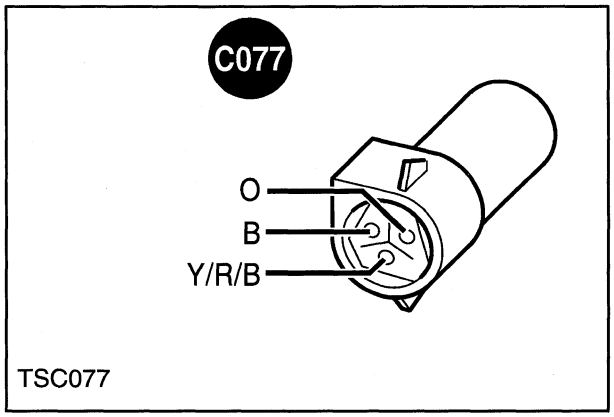

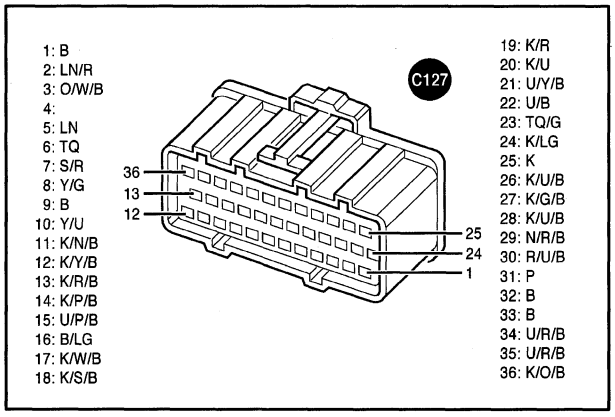

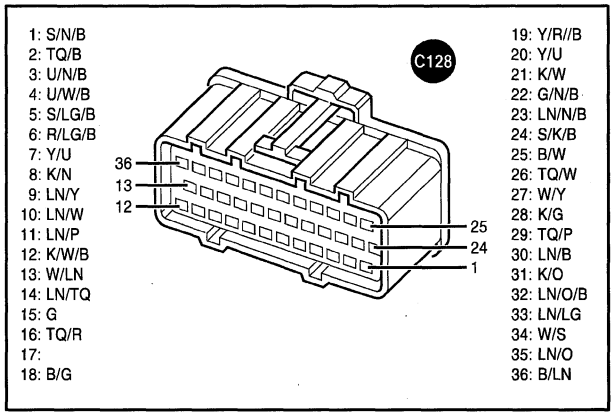

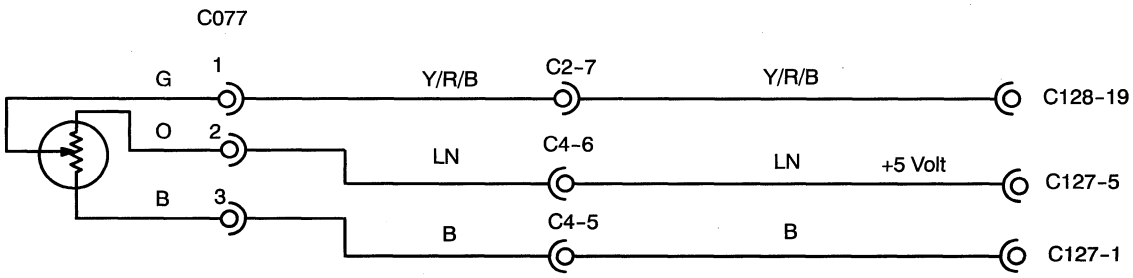

DIAGRAM 11 - Error Code E11 - Clutch potentiometer voltage below valid range

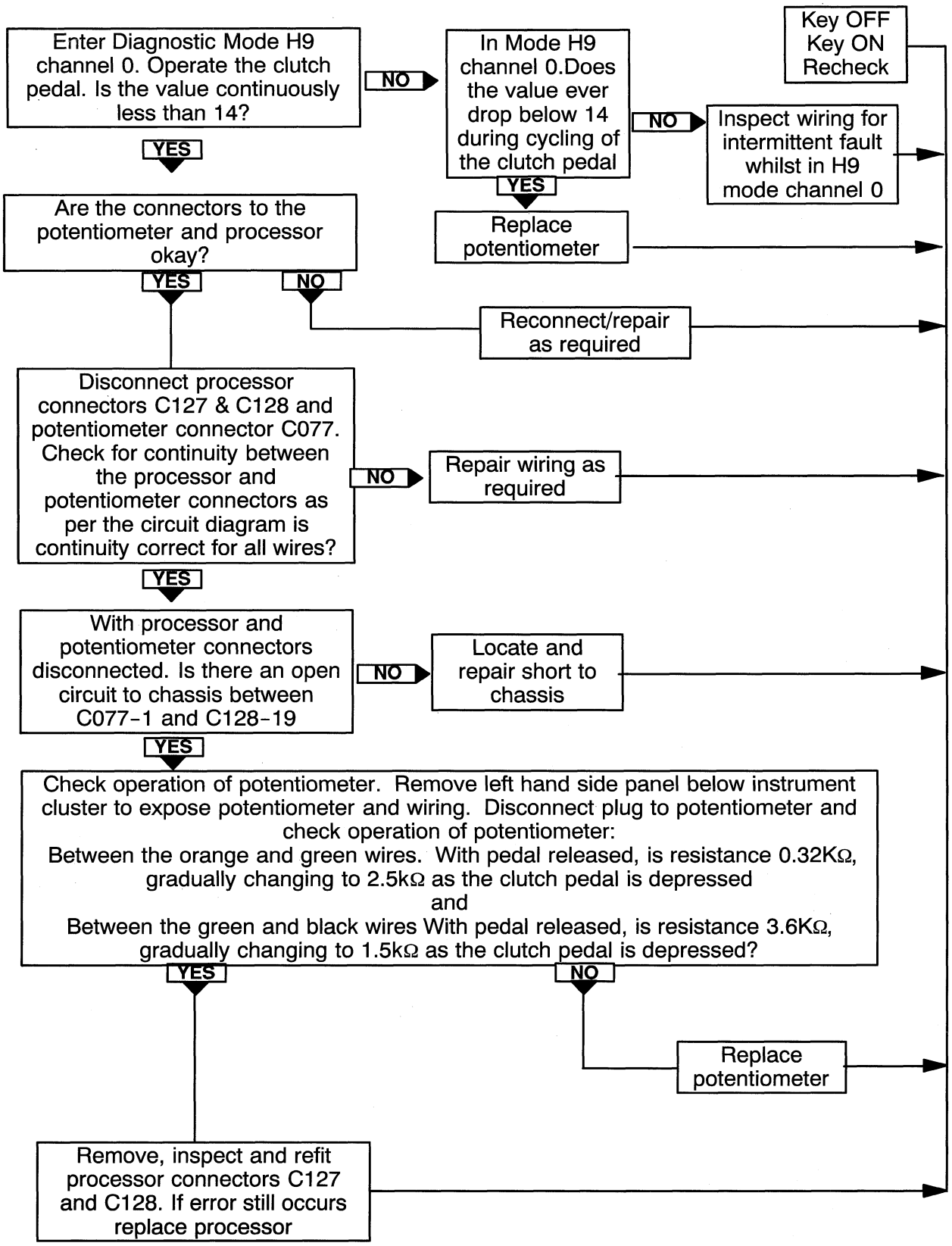

DIAGRAM 12 - Error Code E12

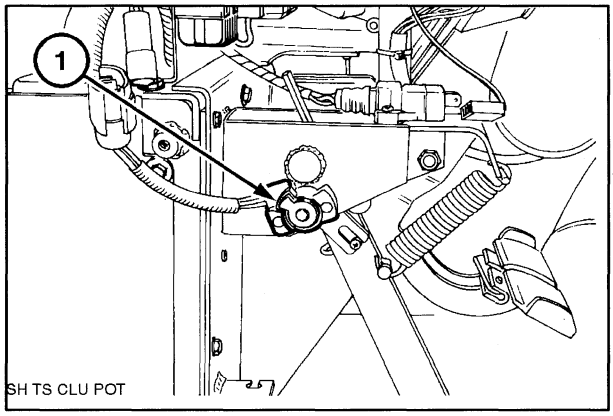

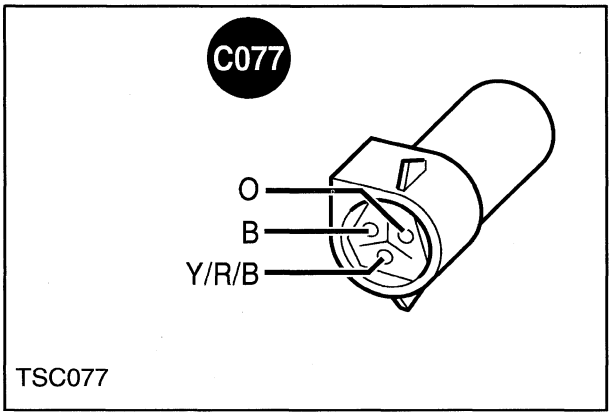

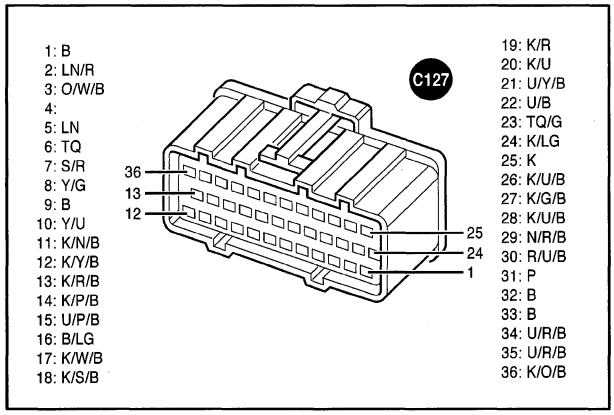

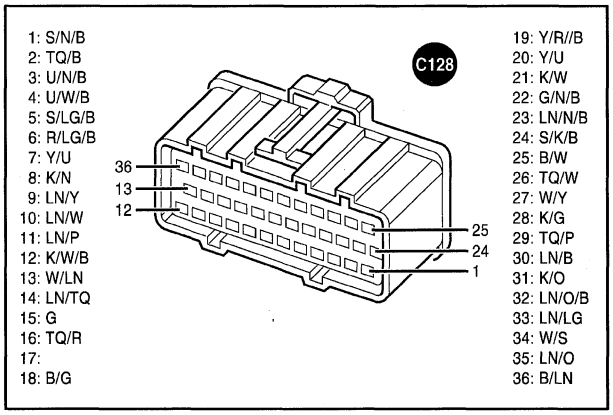

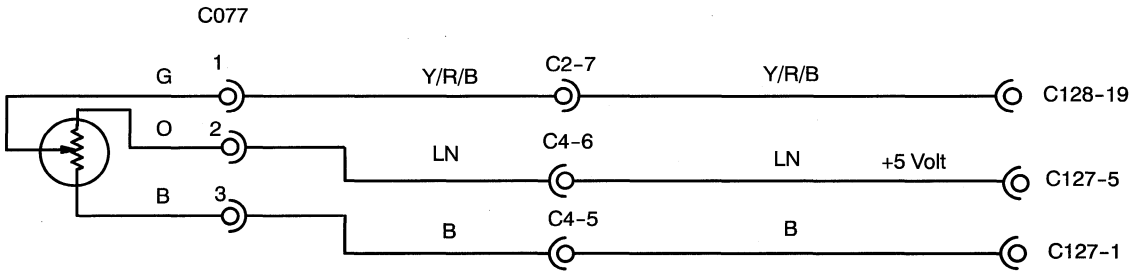

DIAGRAM 12 - Error Code E12 - Clutch potentiometer voltage above valid range

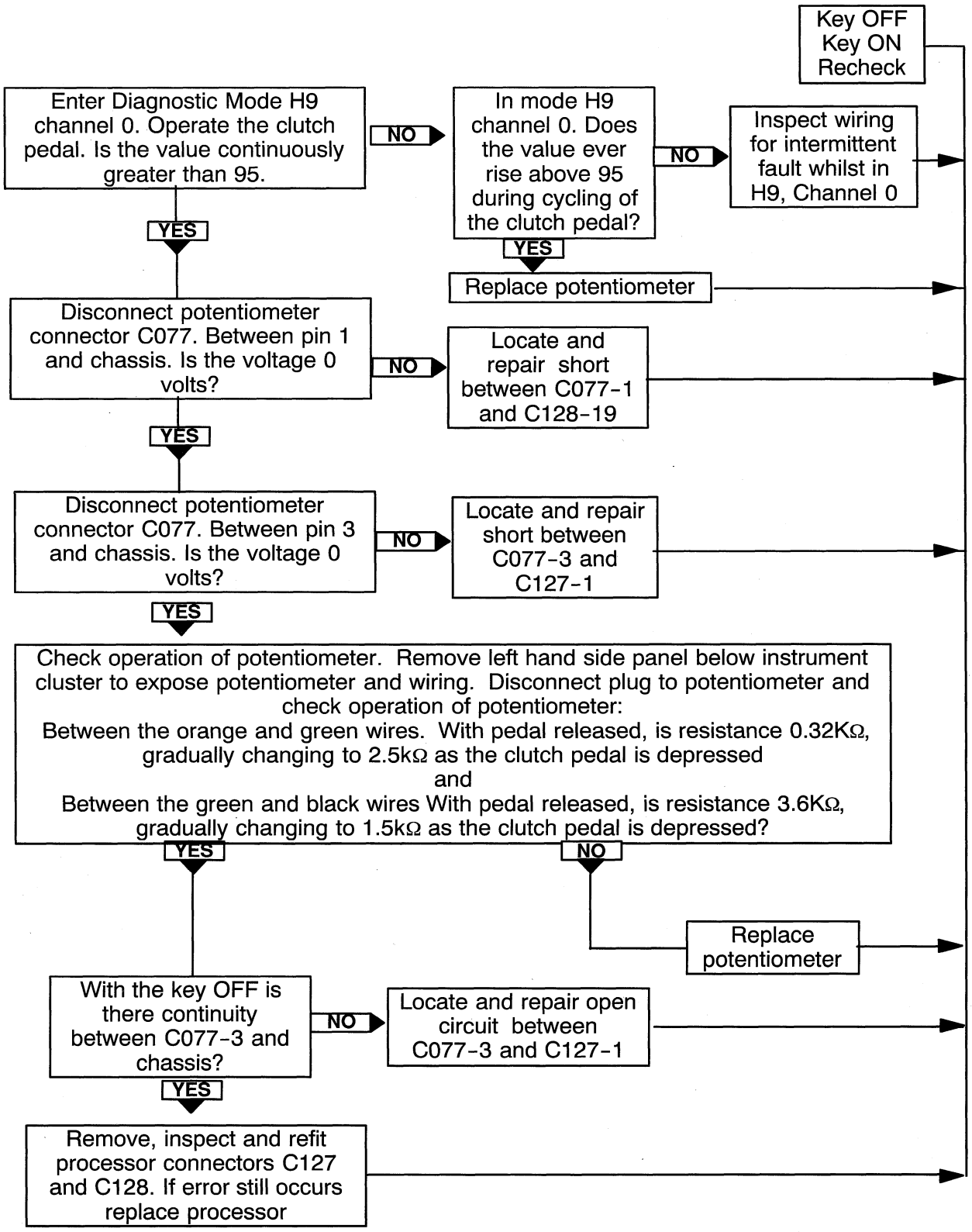

DIAGRAM 13 - Error code E53 - 5 volt reference failed, shorted to battery voltage
Error code E54 - 5 volt reference failed, shorted to earth.

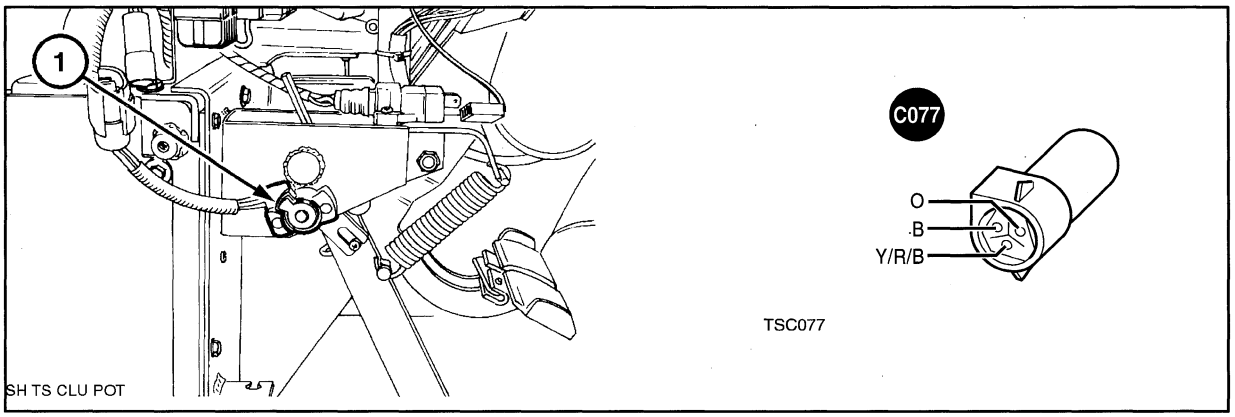

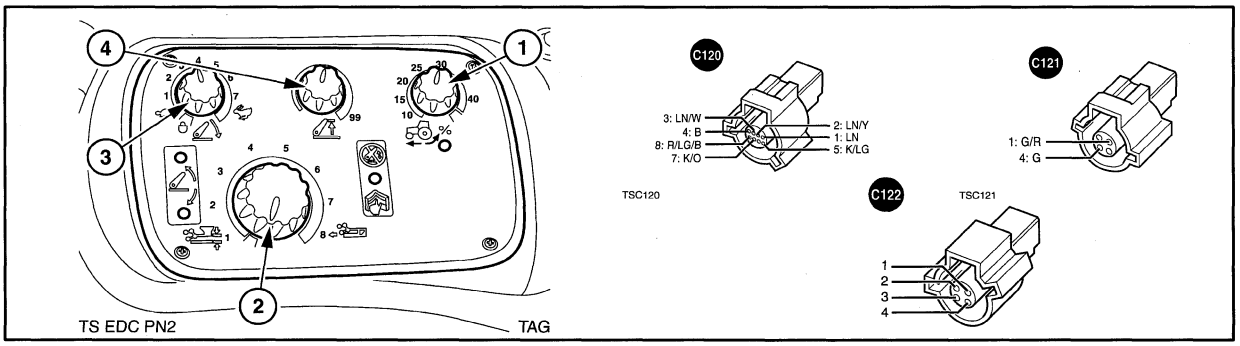

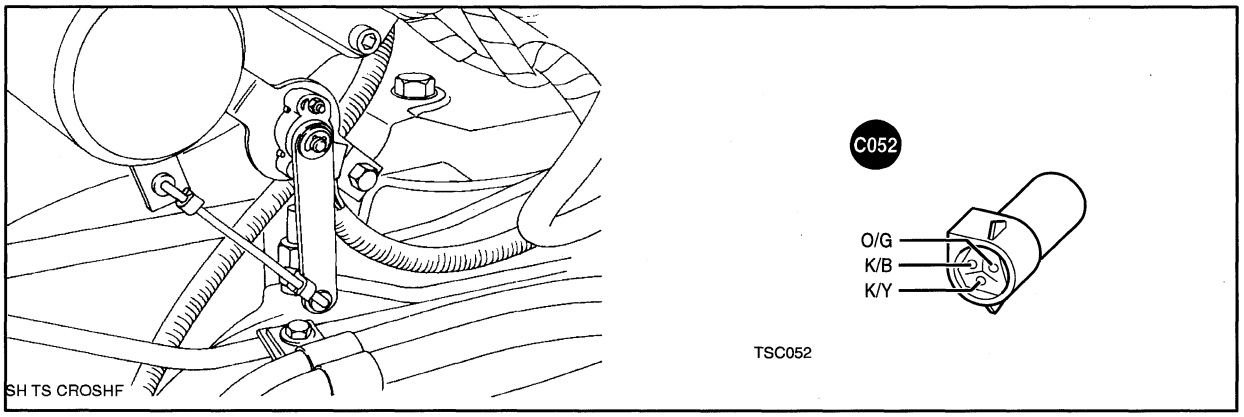

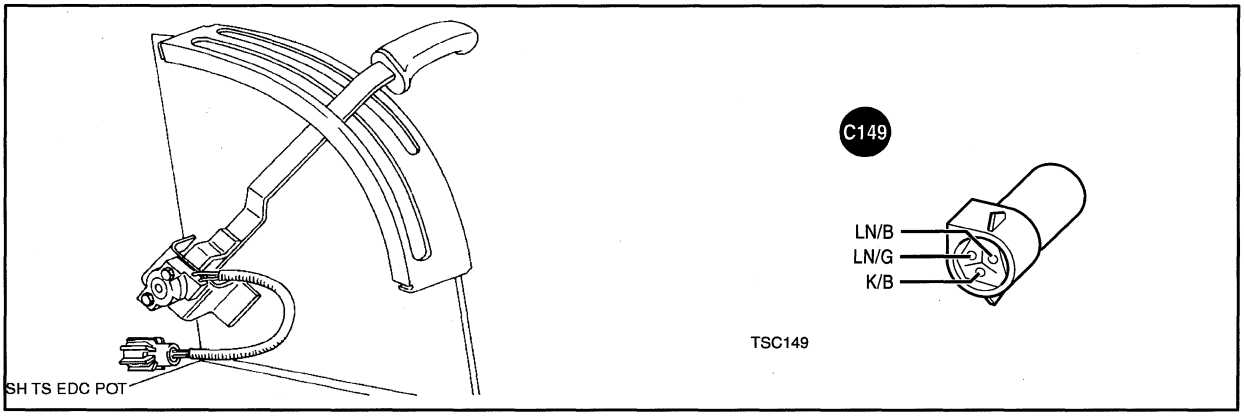

DIAGRAM 13 - Error code E53 - 5 volt reference failed, shorted to battery voltage
Error code E54 - 5 volt reference failed, shorted to earth.

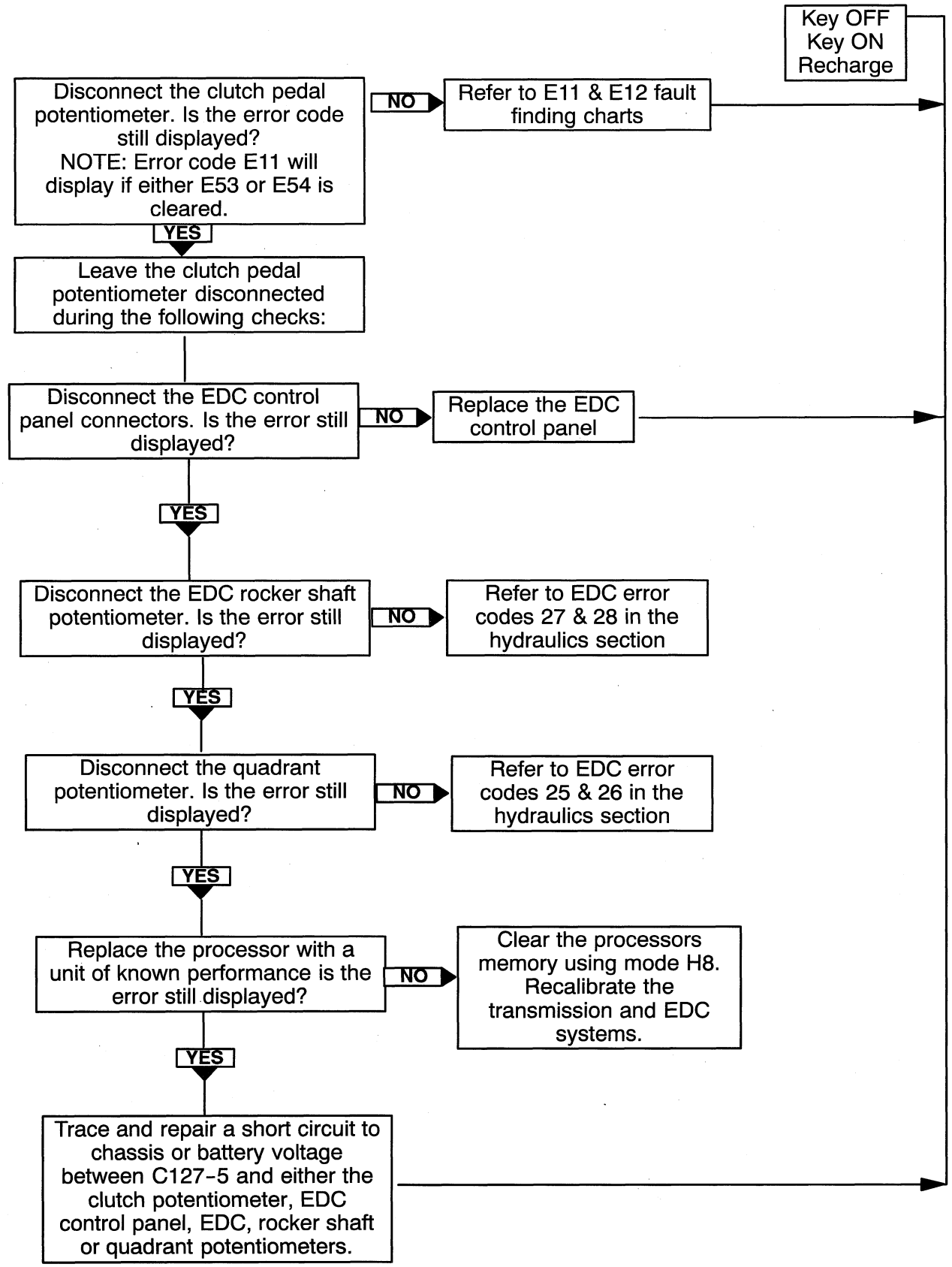

DIAGRAM 14 - Error Codes E37, E48 and E47

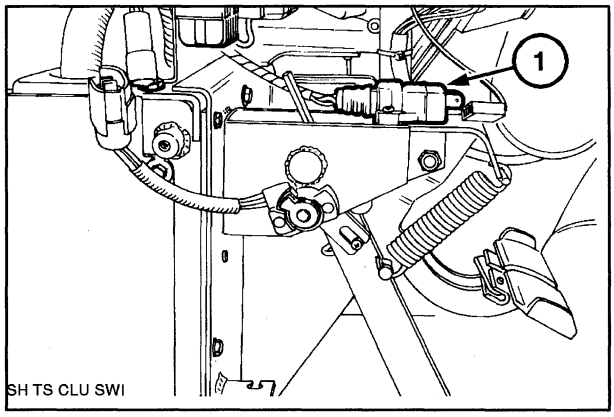

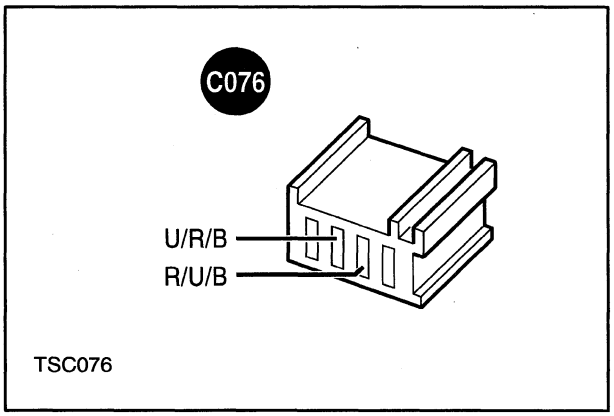

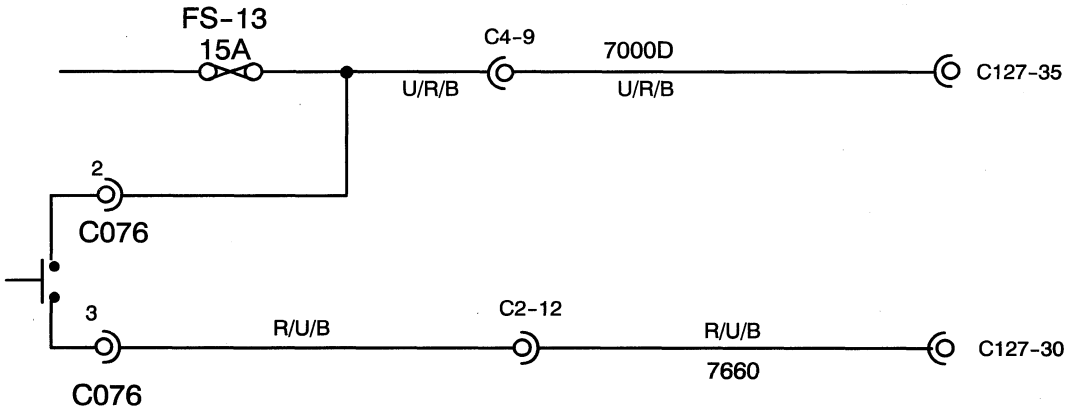

DIAGRAM 14 -

Error Code E37 displayed - Clutch disconnect switch open circuit

Check switch adjustment and switch operation, if okay trace break in wiring (open circuit).

Error Code E48 displayed - Clutch disconnect switch short circuit

Check switch adjustment and switch operation, if okay trace short circuit in wiring.

Error Code E47 displayed - Clutch disconnect maladjusted high

Check switch adjustment and operation of switch.

NOTE: *With each of these error codes also check that the clutch potentiometer operates over the full range using Service mode HA. If the range is not 0-99 then refer to 'Clutch Potentiometer calibration' Diagram 5.*

DIAGRAM 15 - PWM Solenoids

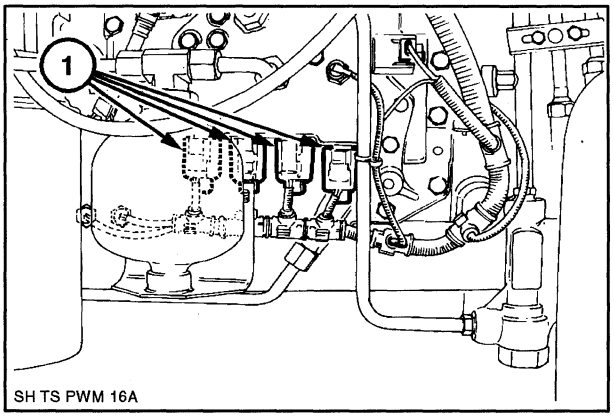

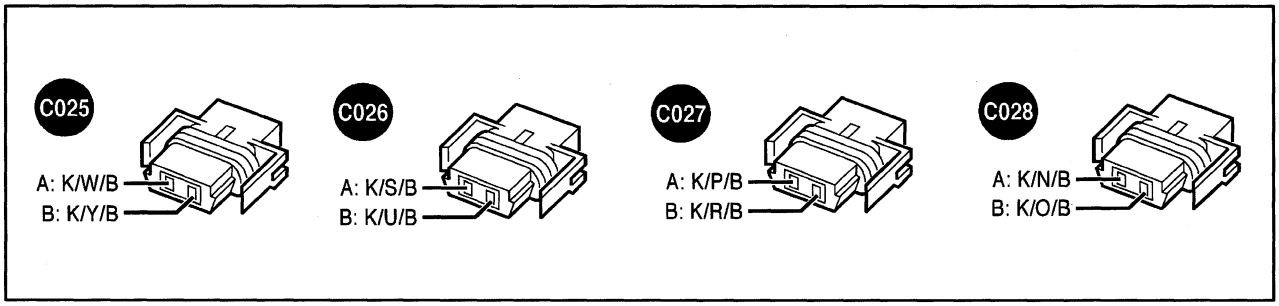

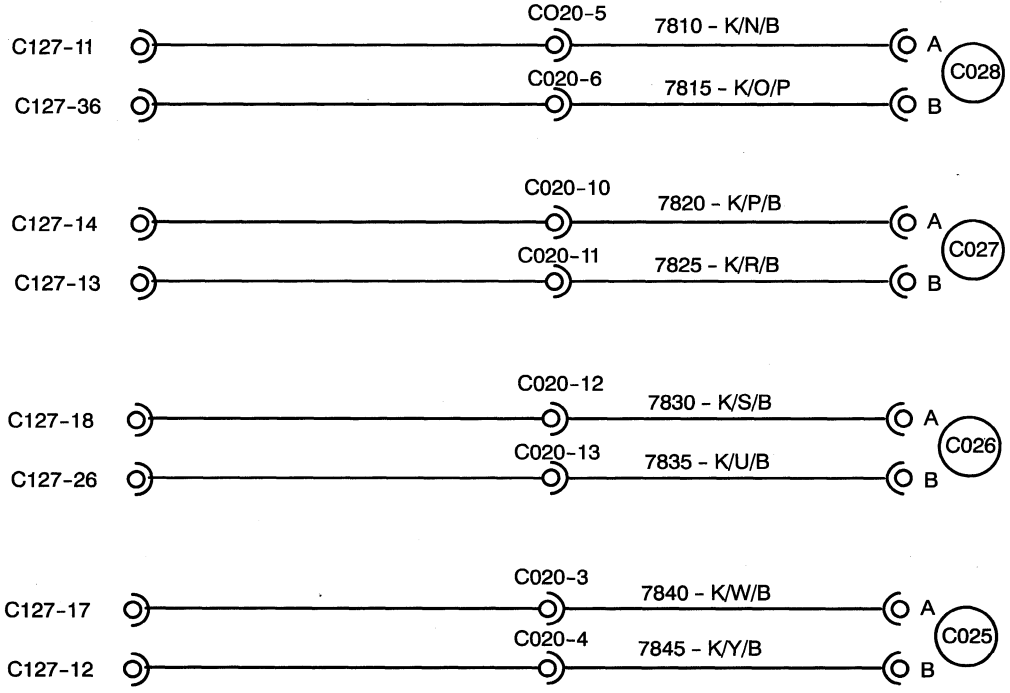

DIAGRAM 15 - PWM Solenoids

Error Code E38 displayed - C4 (C25) PWM solenoid wiring short circuit
Error Code E39 displayed - C4 (C25) PWM solenoid wiring open circuit
Error Code E40 displayed - C3 (C26) PWM solenoid wiring short circuit
Error Code E41 displayed - C3 (C26) PWM solenoid wiring open circuit
Error Code E42 displayed - C2 (C27) PWM solenoid wiring short circuit
Error Code E43 displayed - C2 (C27) PWM solenoid wiring open circuit
Error Code E44 displayed - C1 (C28) PWM solenoid wiring short circuit
Error Code E45 displayed - C1 (C28) PWM solenoid wiring open circuit

Error codes E38 through to E45 indicate either a short or open circuit in the wiring of one of the PWM solenoids. Using a suitable multi-meter check the wiring from the PWM solenoid back to the processor module. Locate the short/open circuit and repair or replace wiring as necessary.

If wiring is okay, disconnect the PWM solenoid from the harness and check that the resistance of the PWM coil is approximately 10 ohms at 20°C. If not, replace the PWM solenoid.

If wiring and PWM solenoids are okay, replace the microprocessor with one of known performance.

DIAGRAM 16 - The creeper does not engage in low range - possibly error code E16 or Symbol 'C' displayed

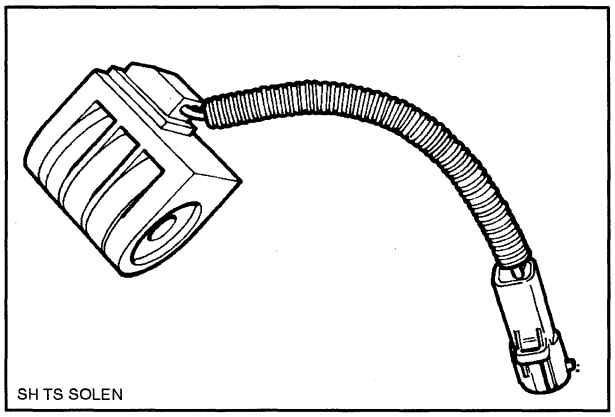

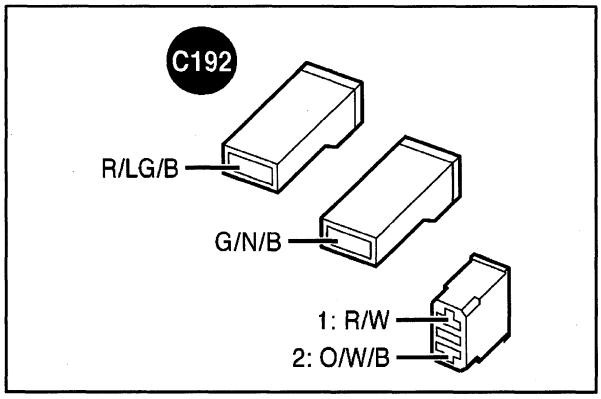

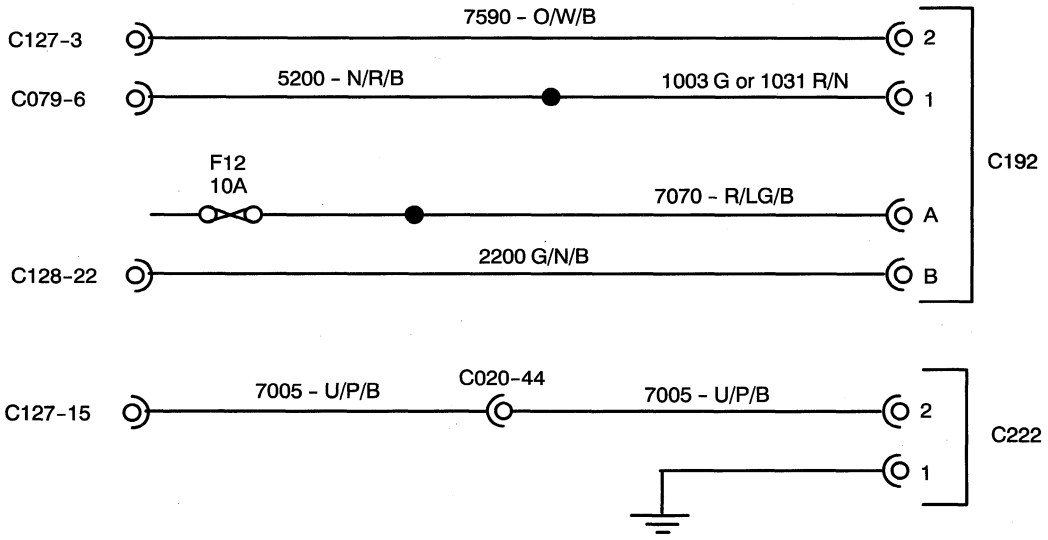

DIAGRAM 16 - The creeper does not engage in low range - possibly error code E16 or Symbol 'C' displayed

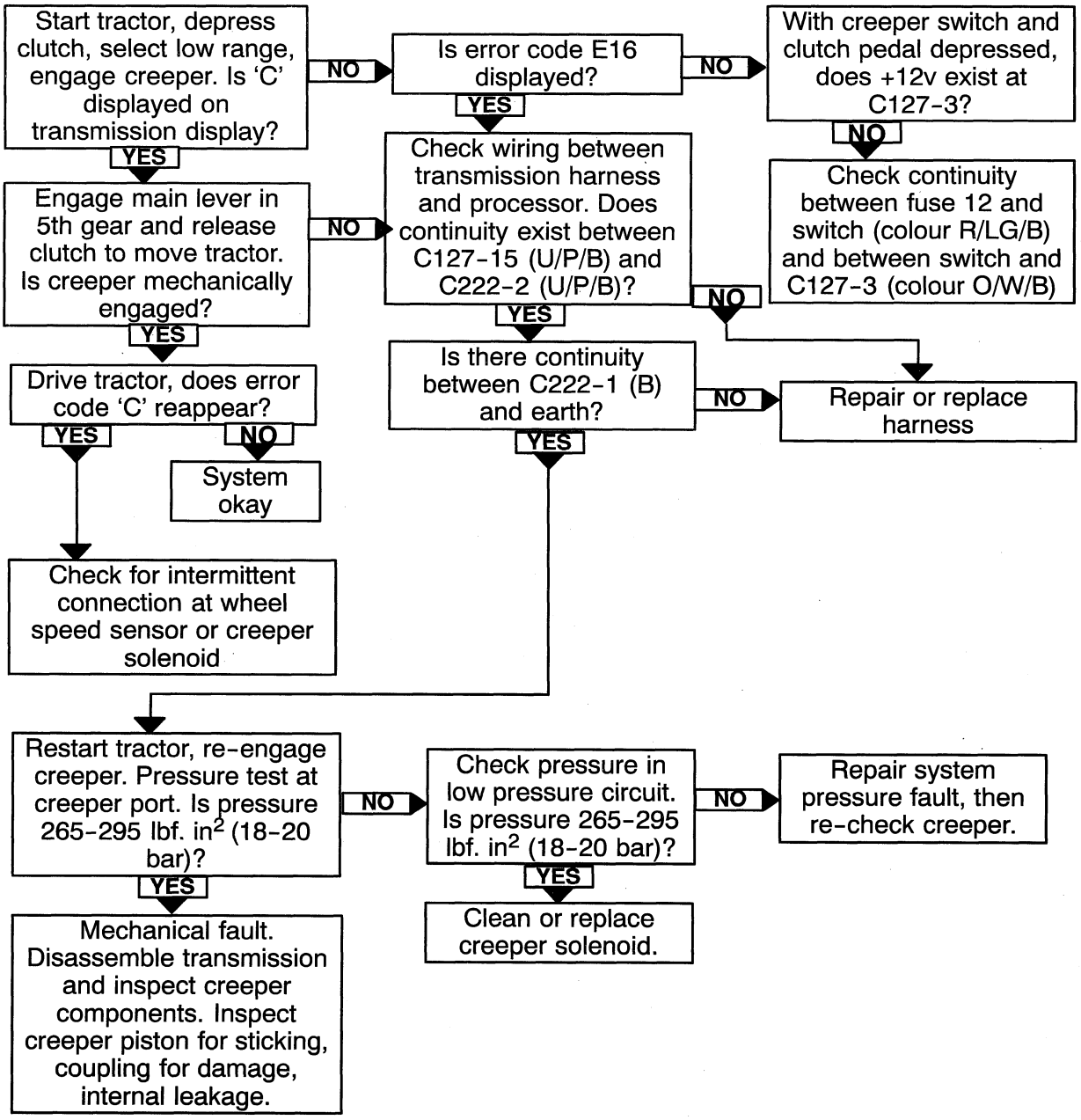

DIAGRAM 17 - Code HC displayed

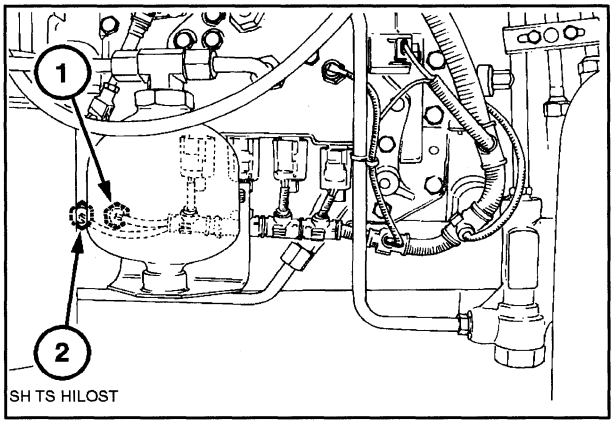

1. High range switch
2. Low range switch

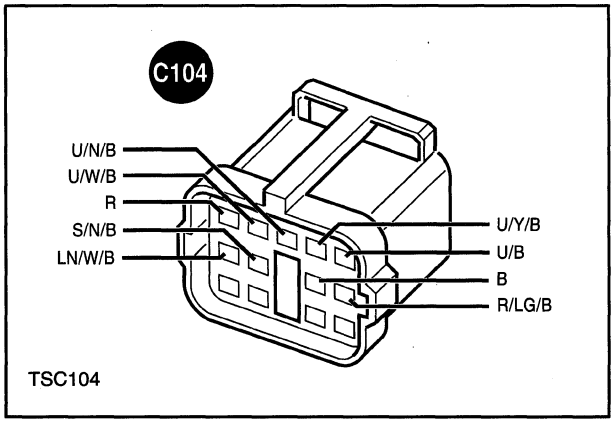

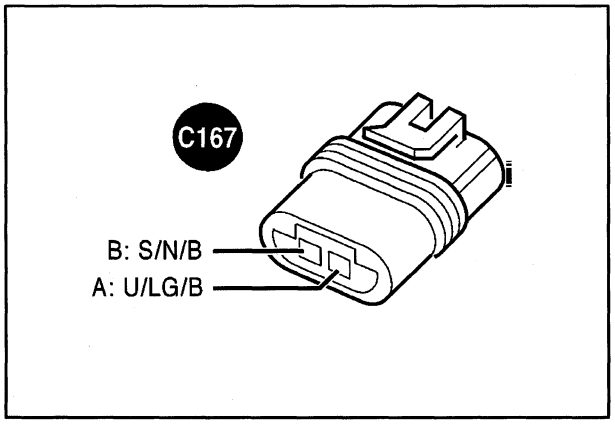

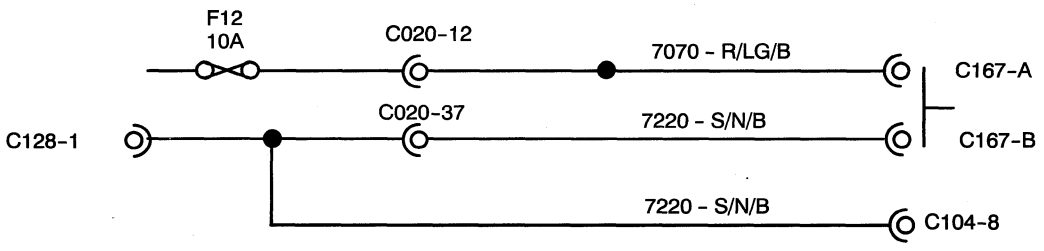

DIAGRAM 17 - Code HC displayed

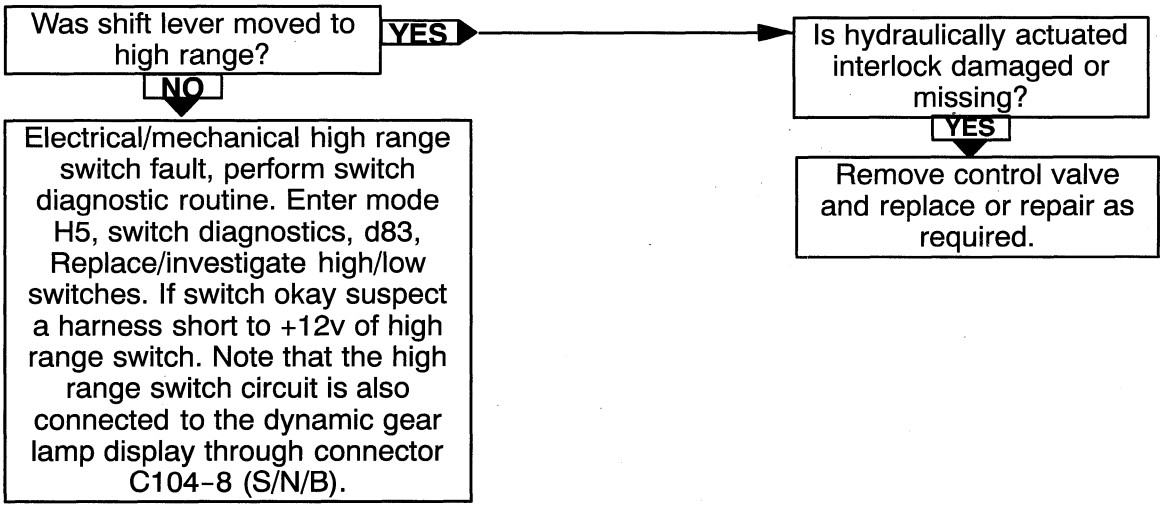

DIAGRAM 18 - Error code CP displayed - depress clutch pedal to re-enable transmission

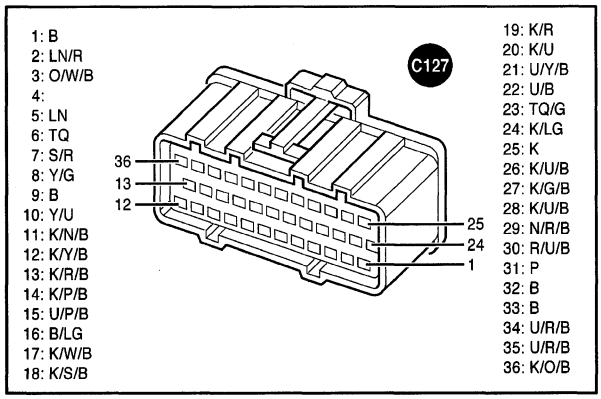

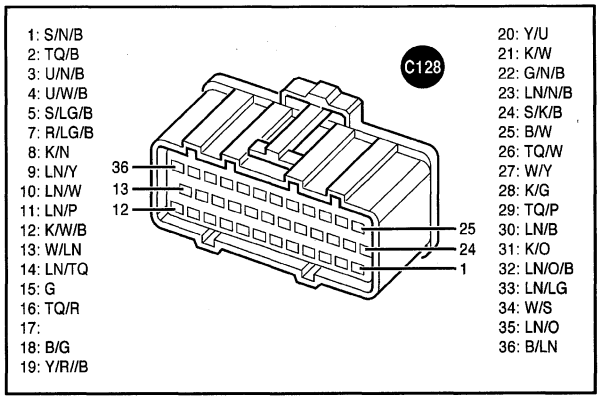

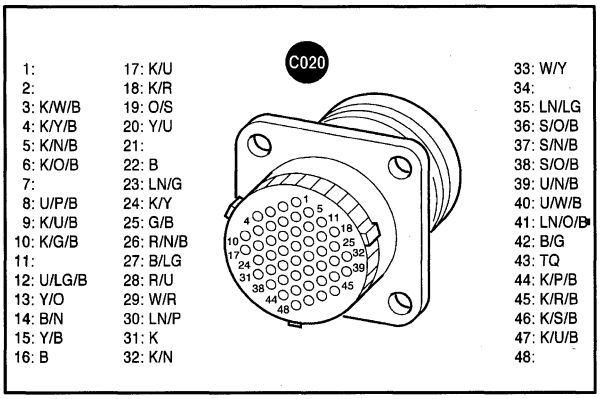

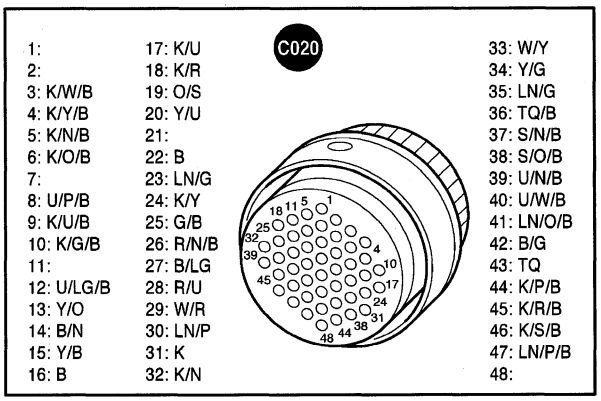

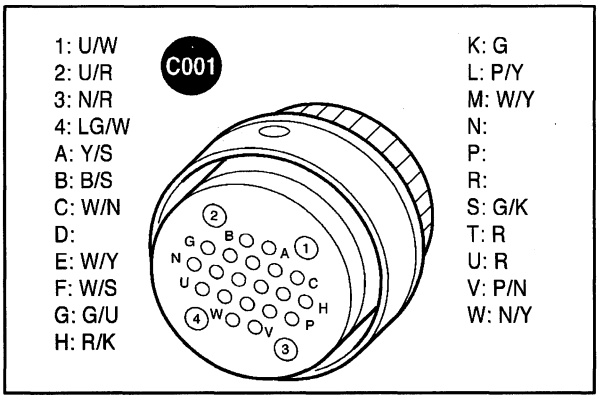

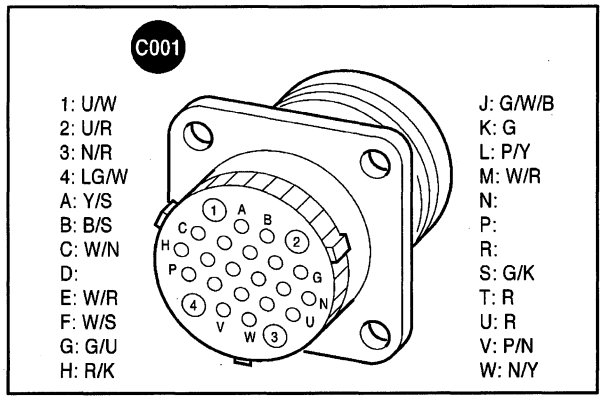

DIAGRAM 18 - Error code CP displayed - depress clutch pedal to re-enable transmission

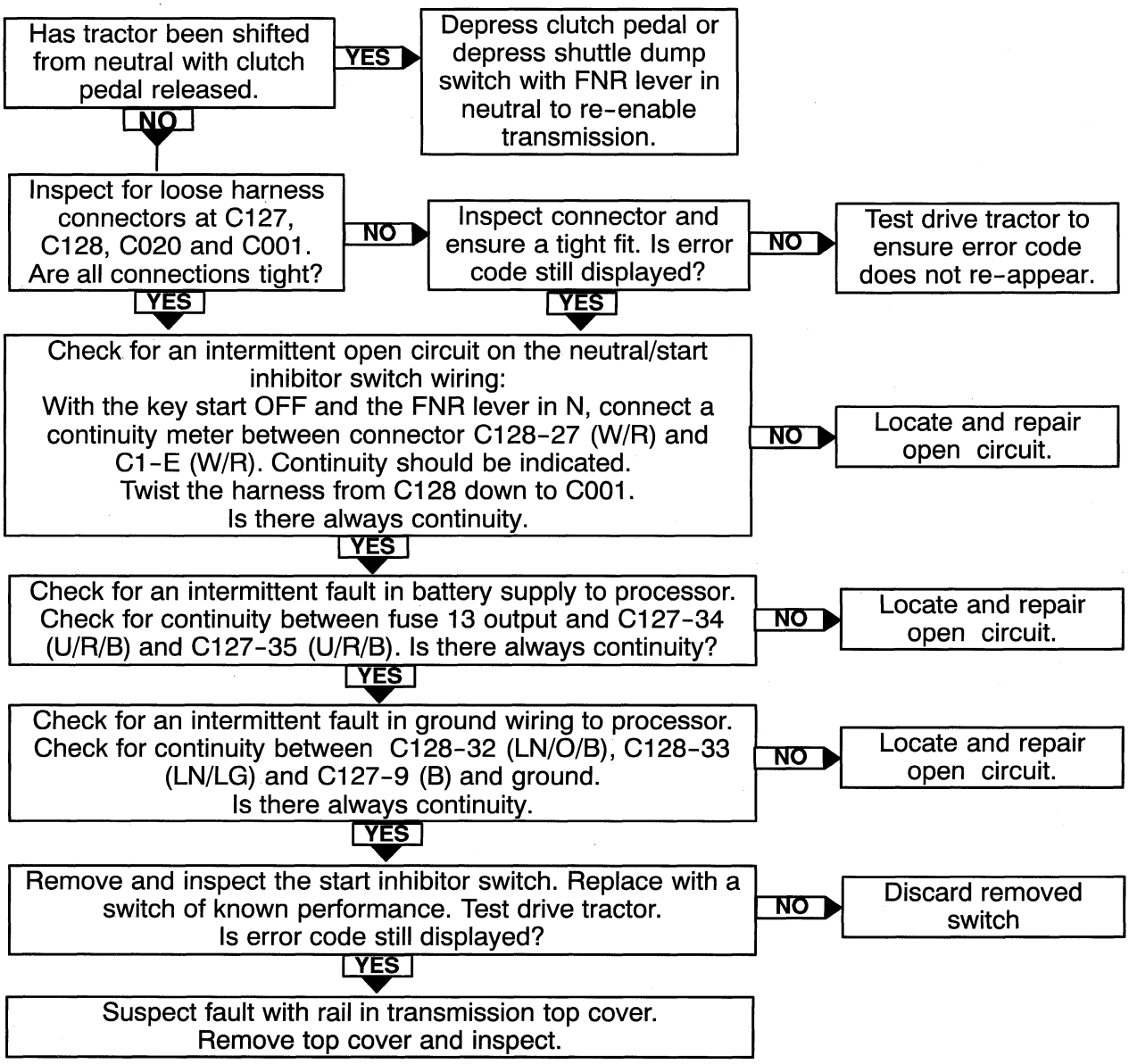

DIAGRAM 19 - Error code E46 displayed - Fuse 12 blown.

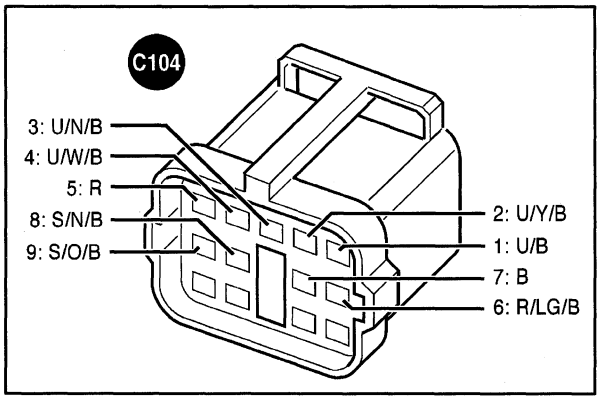

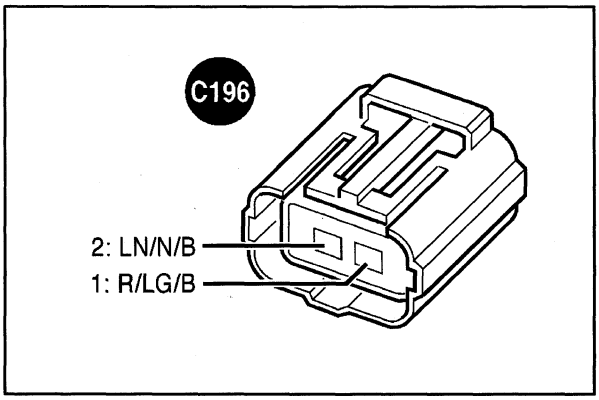

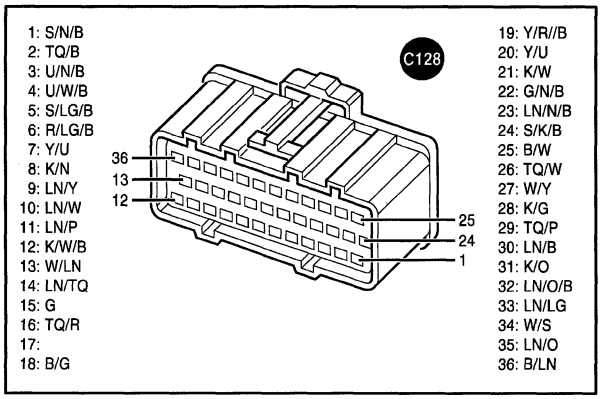

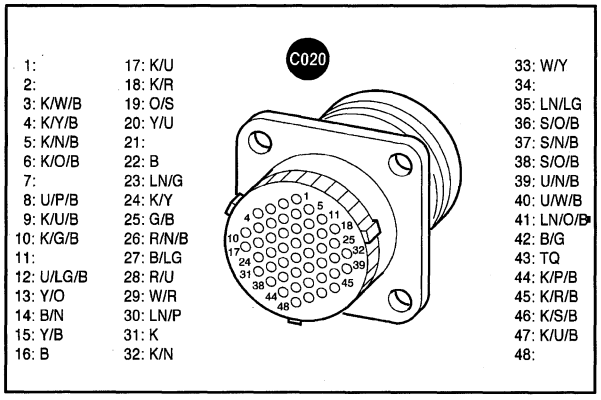

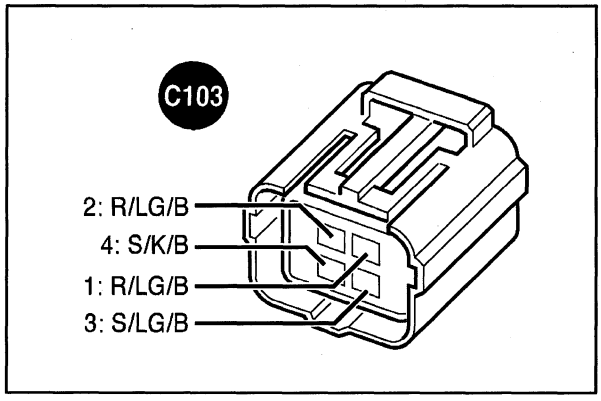

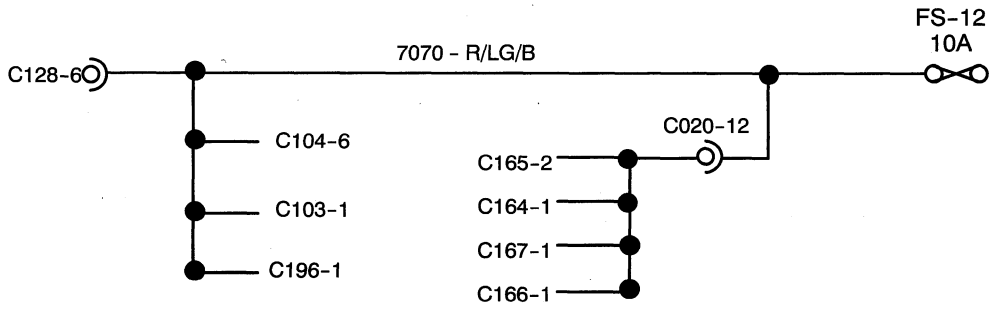

DIAGRAM 19 - Error code E46 displayed - Fuse 12 blown.

No power to switches, 1-4/5-8/shuttle dump/high range/low range/powershift up-down and gearshift display module.

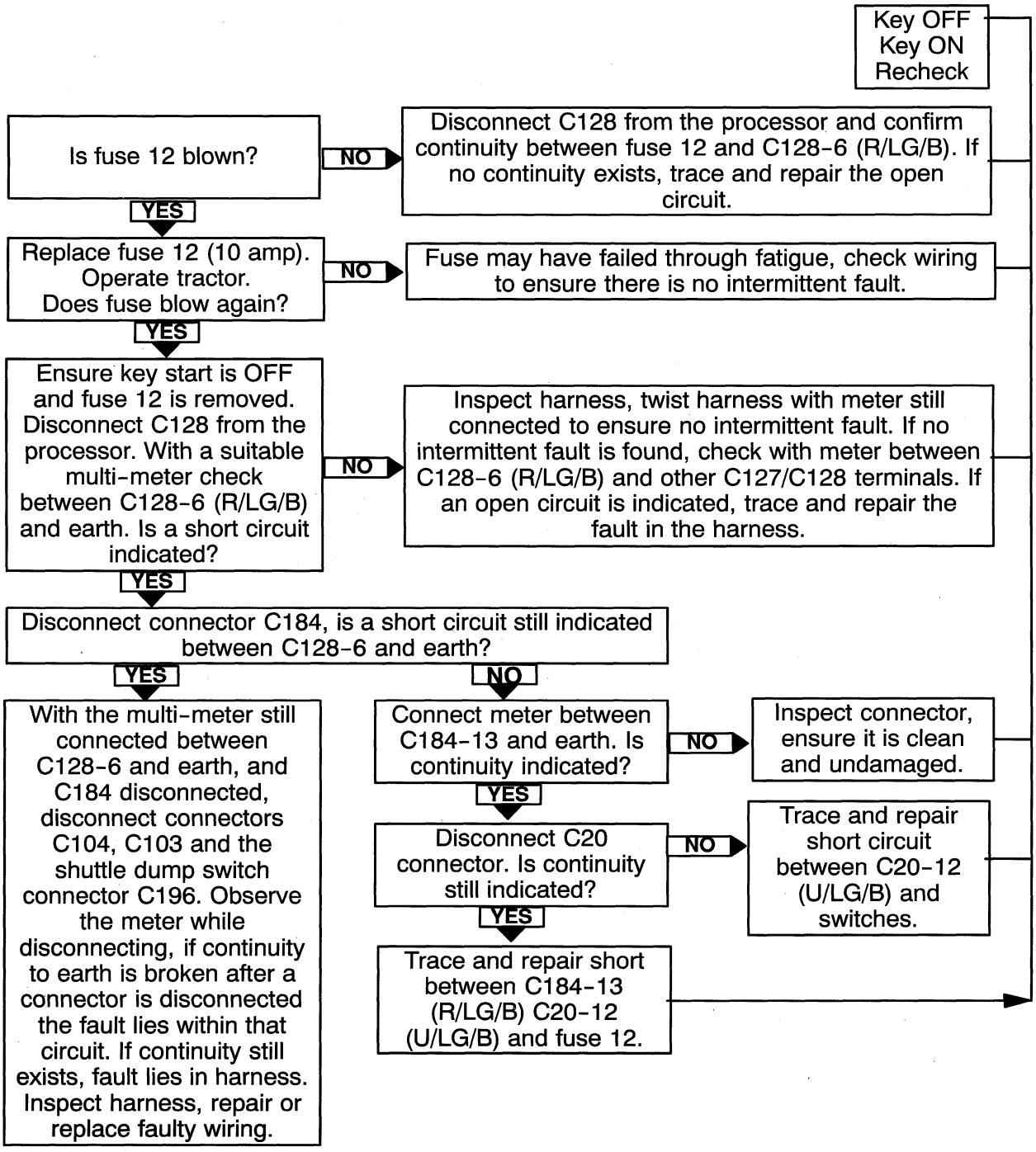

DIAGRAM 20 - Error Codes E51 or E52

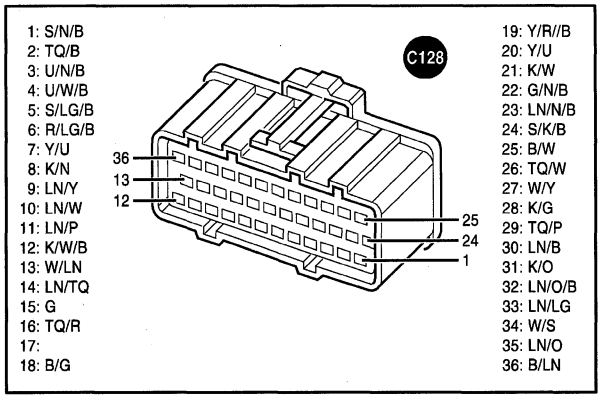

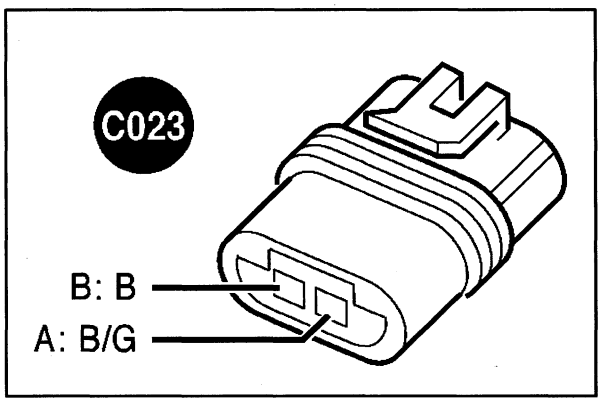

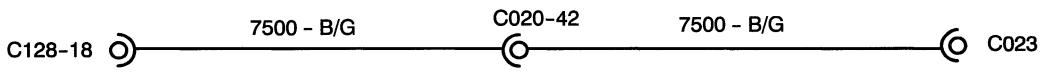

DIAGRAM 20 - Error Codes E51 or E52

Transmission oil Temperature wiring open circuit or short circuit

NOTE: E51 may be generated in extreme cold conditions, i.e, less than -30°C
E52 may be generated in extreme hot conditions, i.e, greater than 130°C

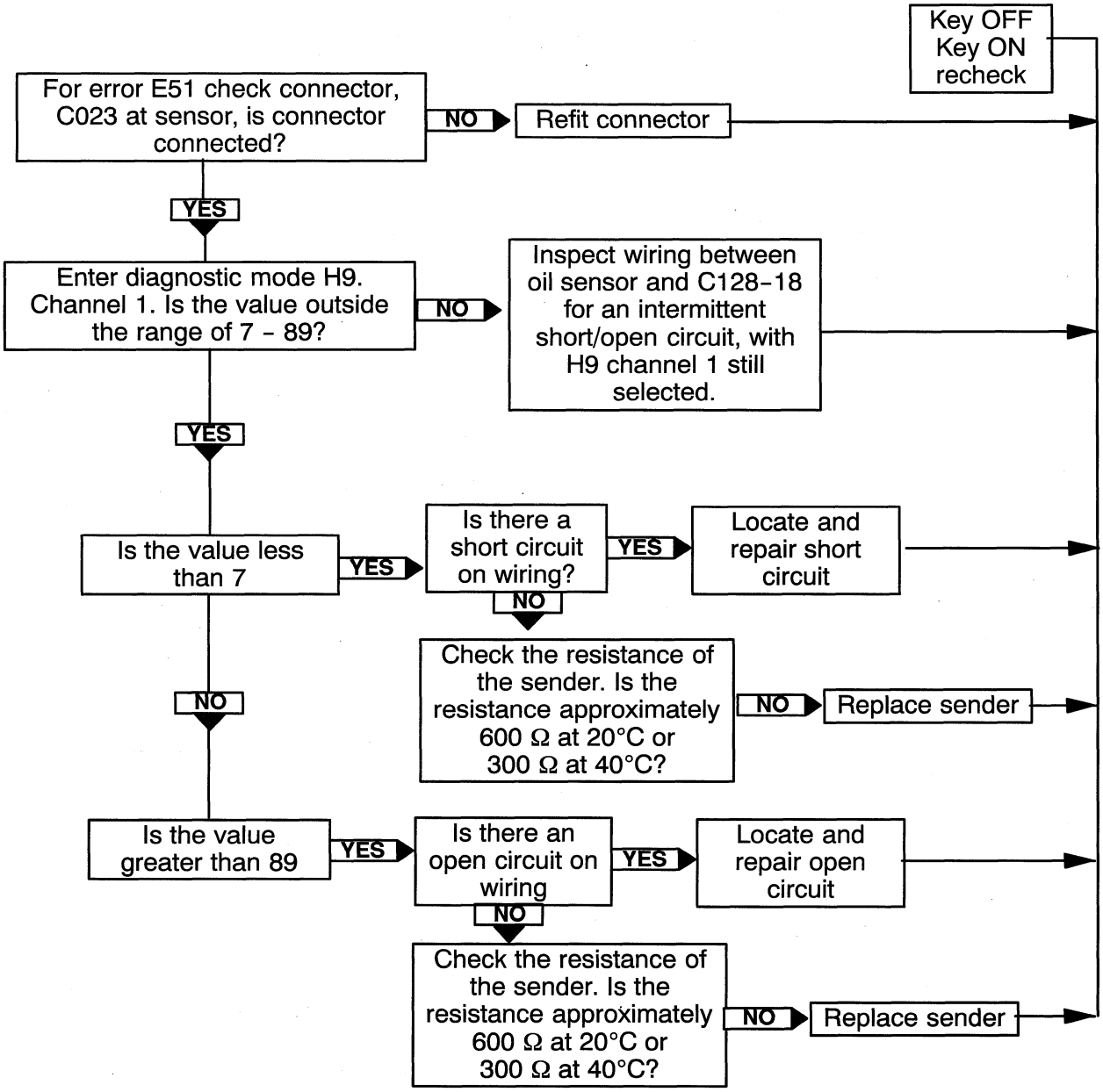

DIAGRAM 21 - Error Code E24 - all clutches not calibrated
Error Code EC4 - clutch 4 not calibrated
Error Code EC3 - clutch 3 not calibrated
Error Code EC2 - clutch 2 not calibrated
Error Code EC1 - clutch 1 not calibrated

Perform spring calibration procedure to clear error.

Note: *These errors will only occur after installation of a new processor or after a 'H8' (clear processor memory operation)*

DIAGRAM 22 - E15 - High/Low switches both ON

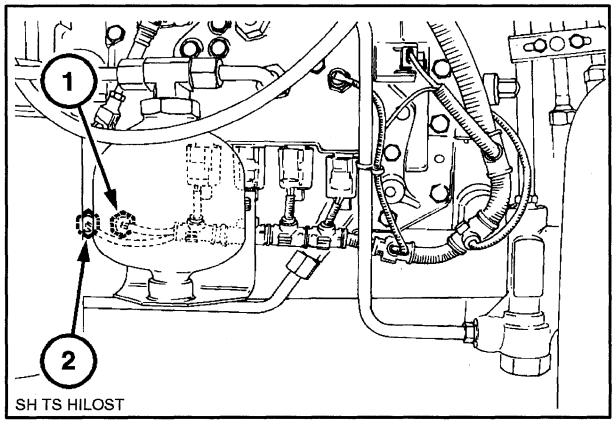

1. High range switch
2. Low range switch

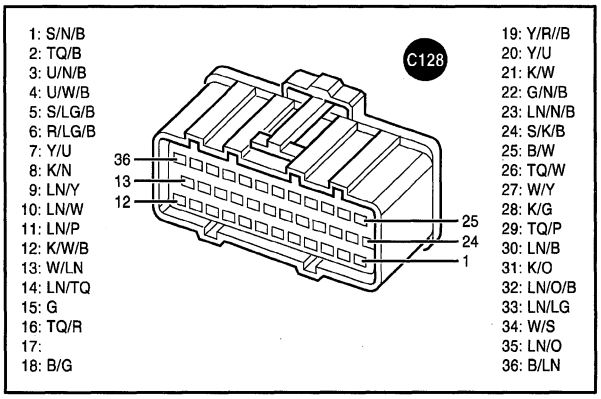

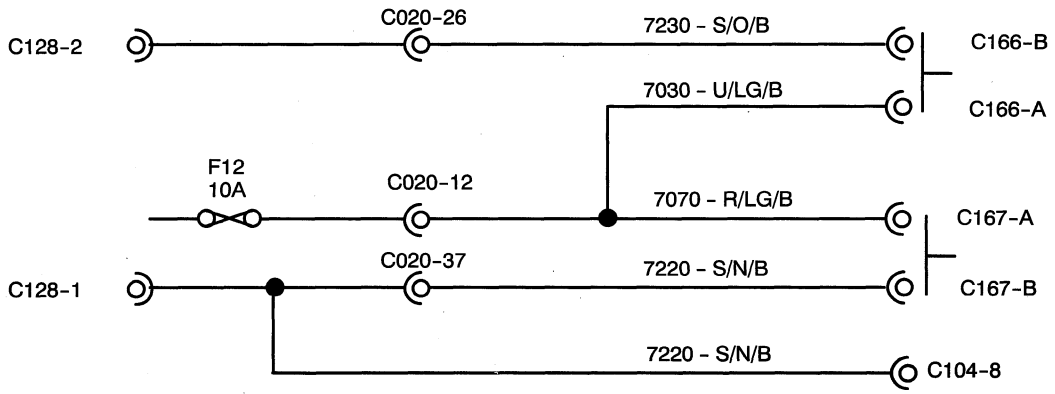

DIAGRAM 22 - E15 - High/Low switches both ON

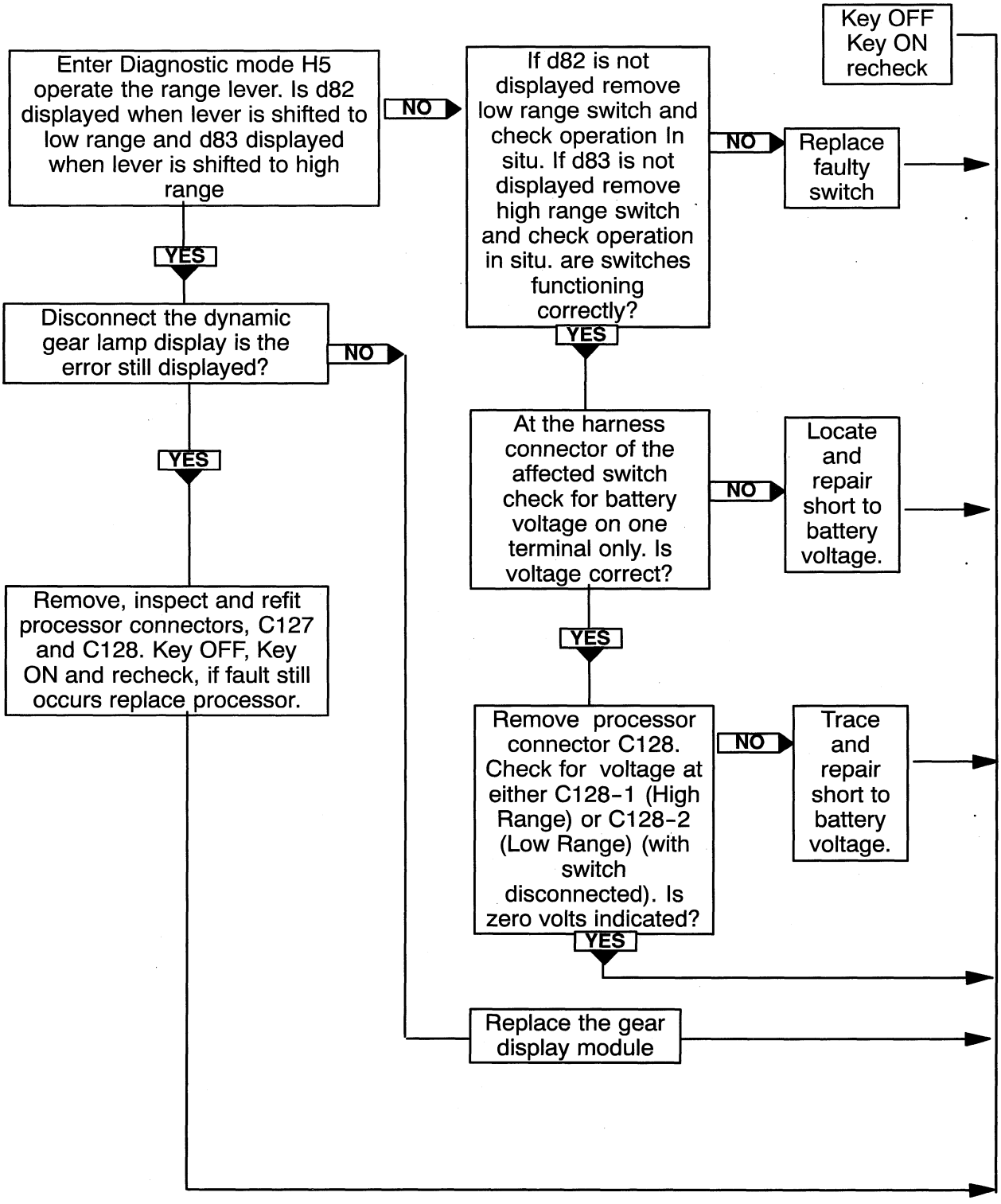

DIAGRAM 23 - E14 - 1-4/5-8 switches both ON

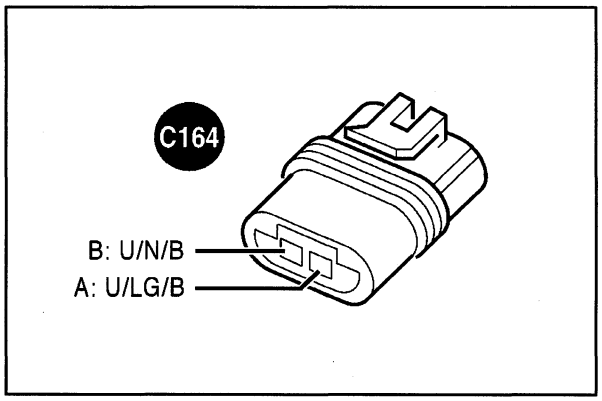

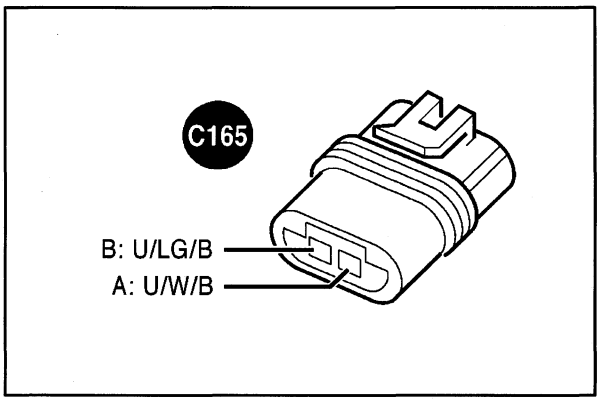

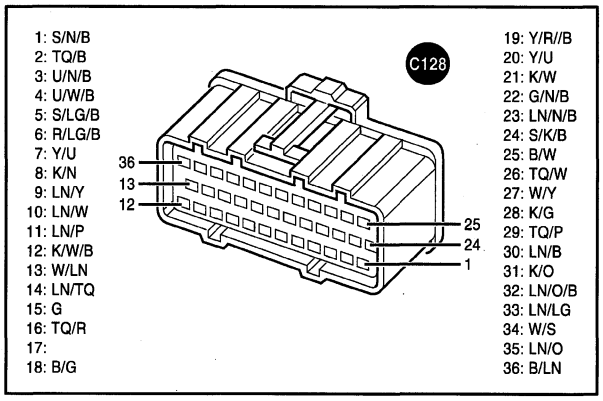

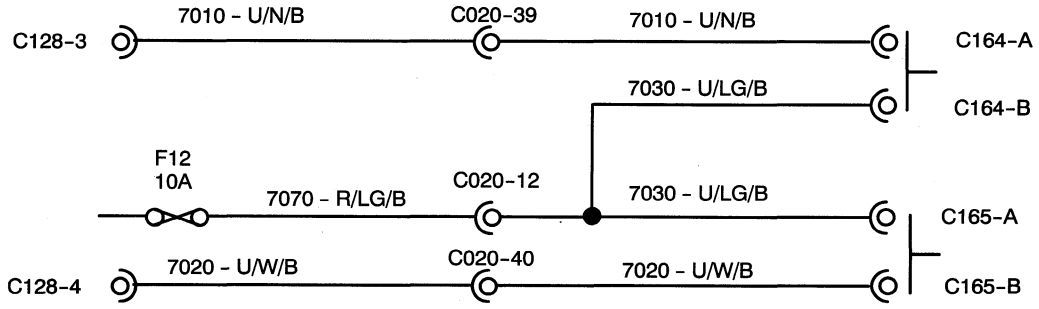

DIAGRAM 23 - E14 - 1-4/5-8 switches both ON

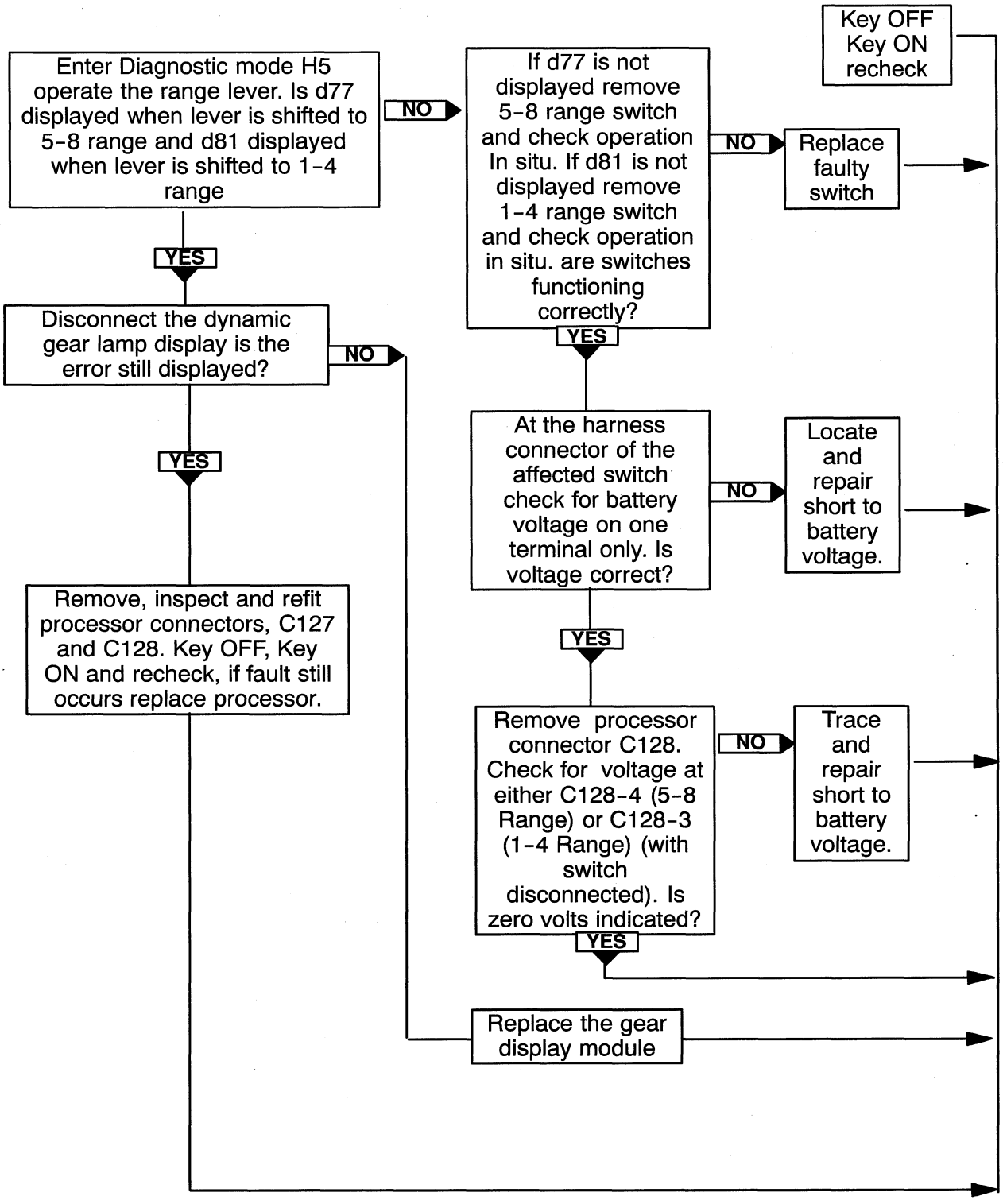

DIAGRAM 24 - ERROR CODE E55 No Signal From Output Speed Sensor

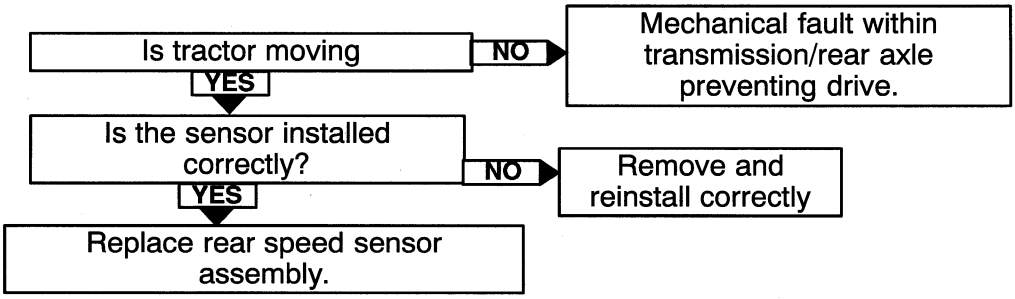

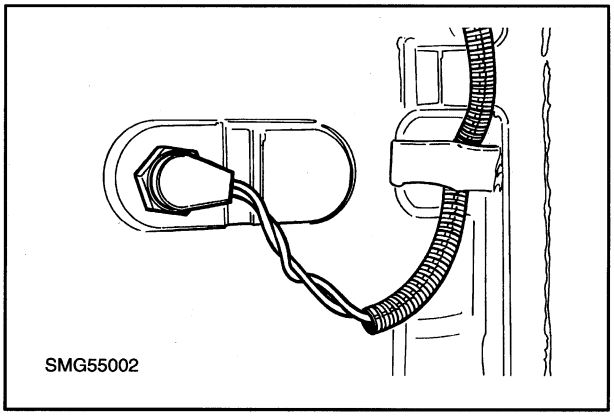

DIAGRAM 25 - ERROR CODE E56 Differential Lock Switch Error

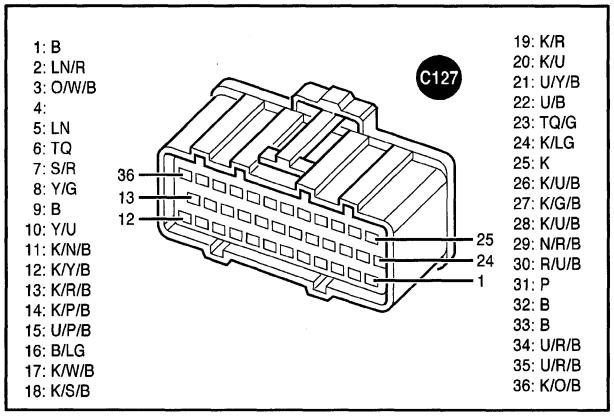

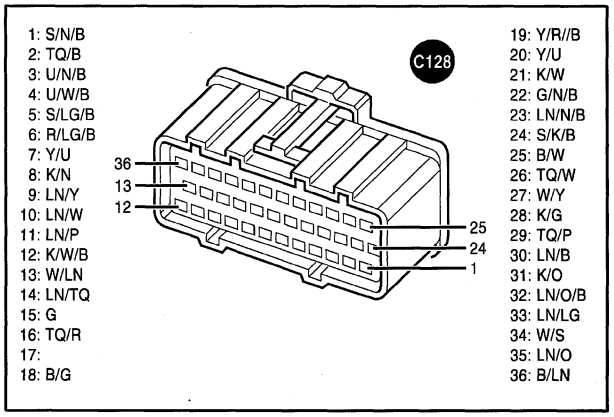

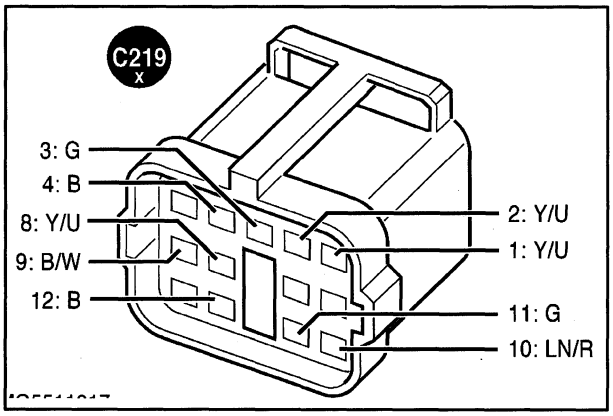

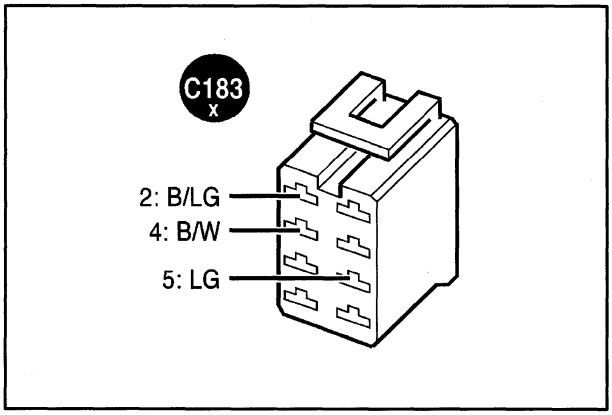

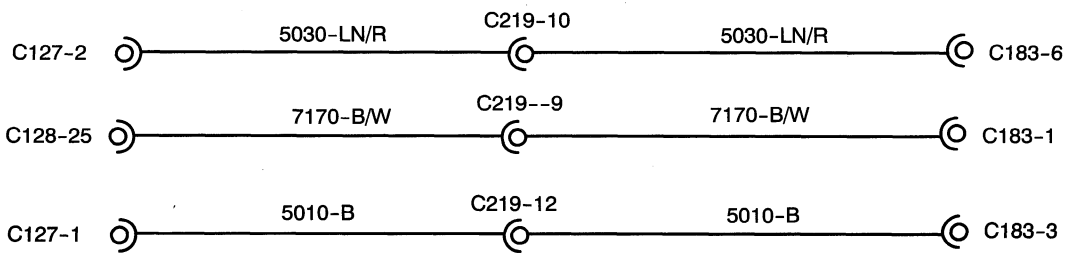

DIAGRAM 25 - ERROR CODE E56 Differential Lock Switch Error

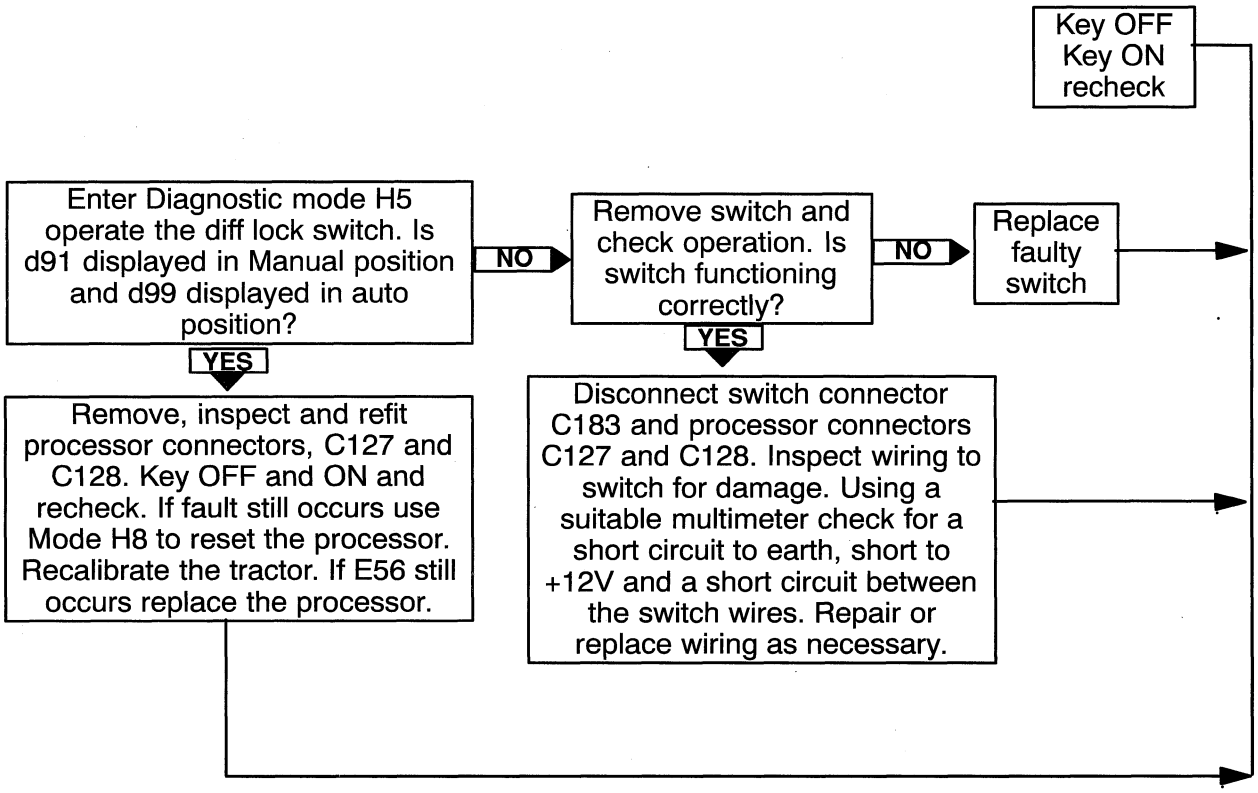

DIAGRAM 26 - Error Code E49

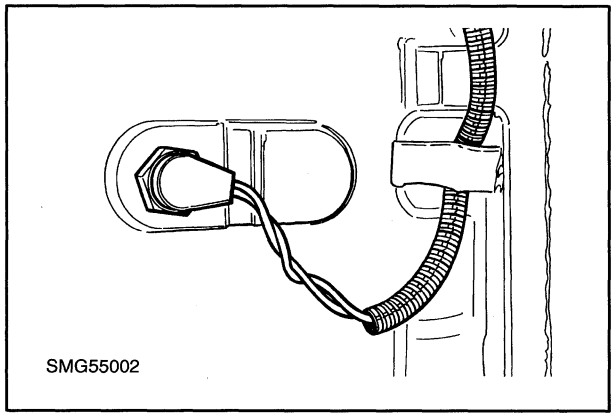

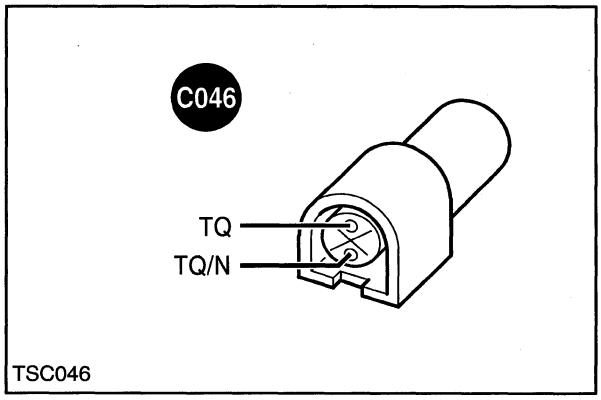

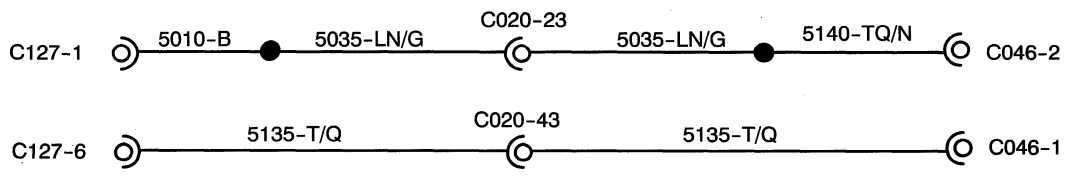

DIAGRAM 26 - Error Code E49

Wheel speed sensor open or short circuit.

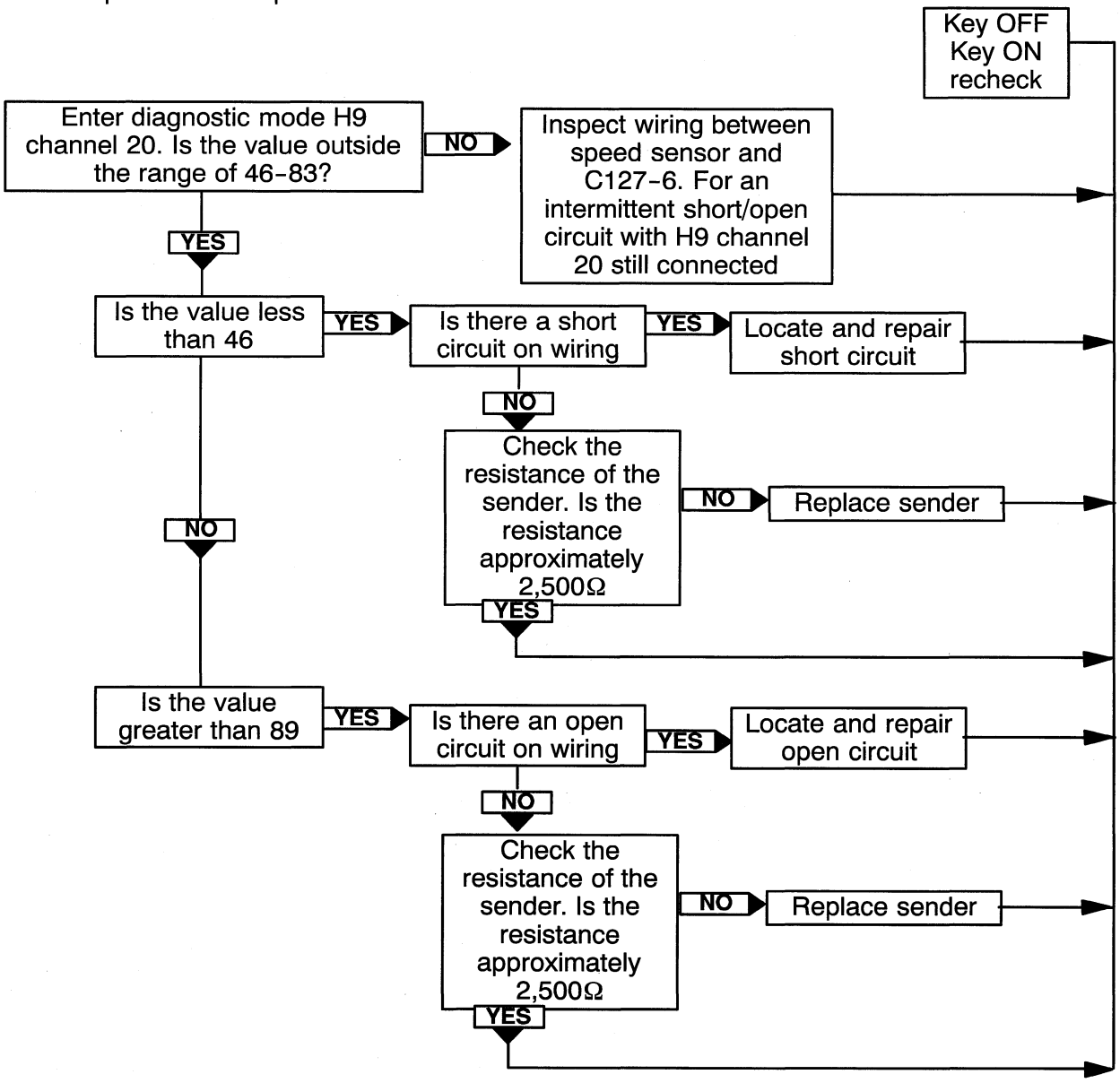

DIAGRAM 27 - Error Code E26 displayed - ERPM signal too high

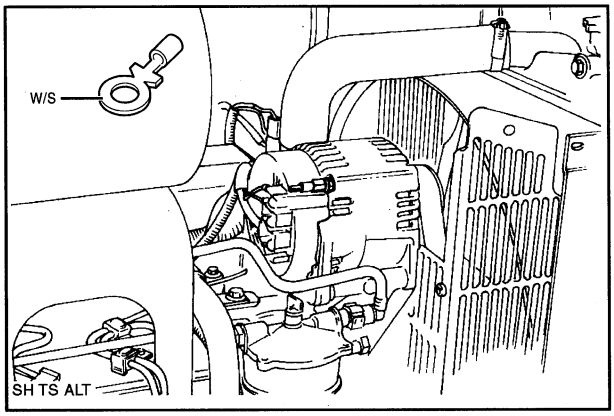

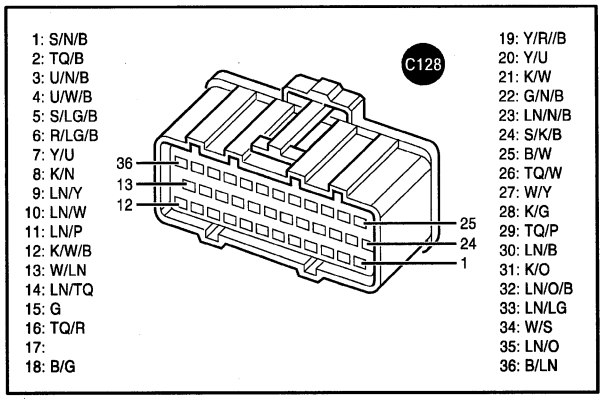

C128-34 — 2015-W/S — 2015-W/S — C001-F — 2015-W/S — C013-W/S

DIAGRAM 27 - Error Code E26 displayed - ERPM signal too high

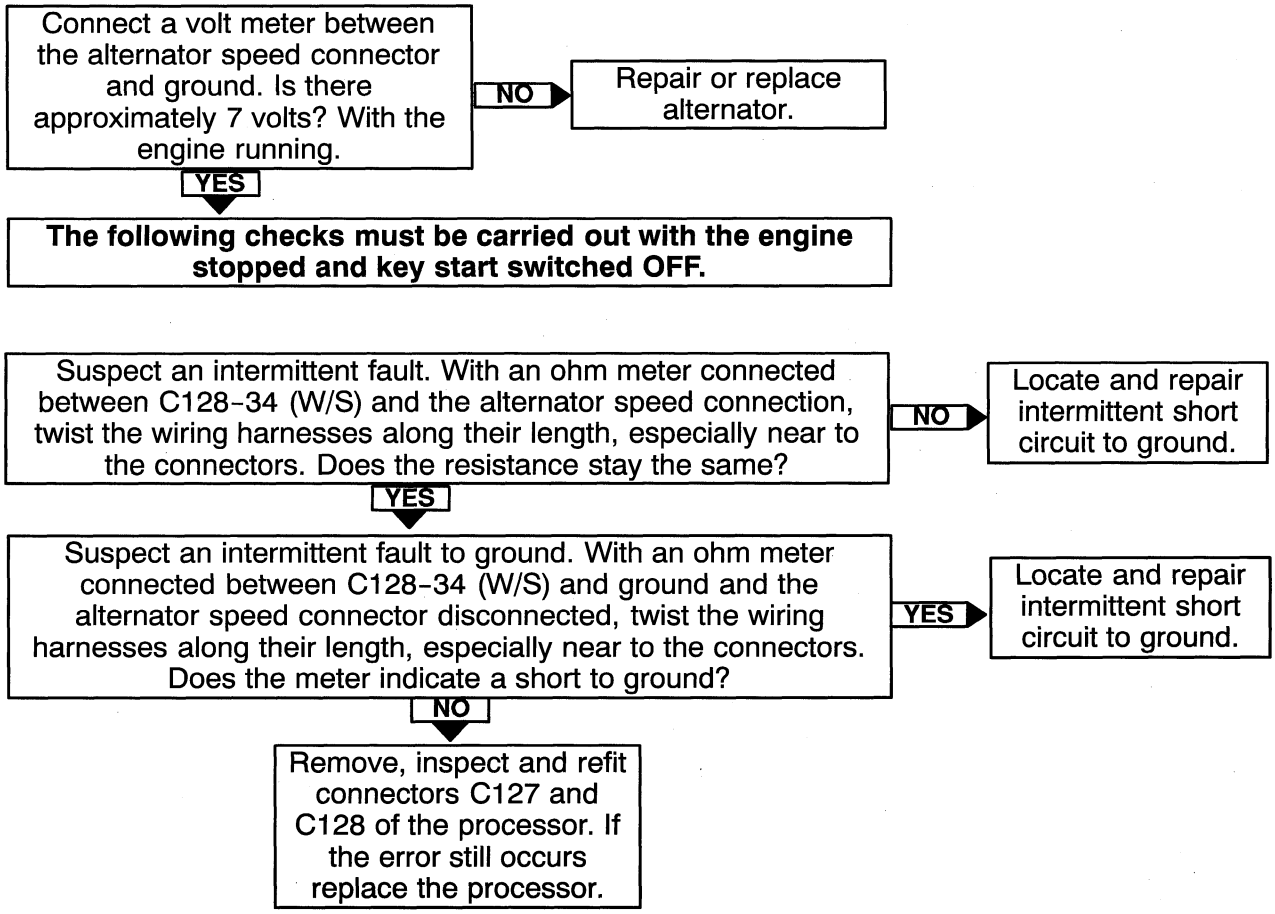

DIAGRAM 28 - Error Code E27 displayed - ERPM signal not present

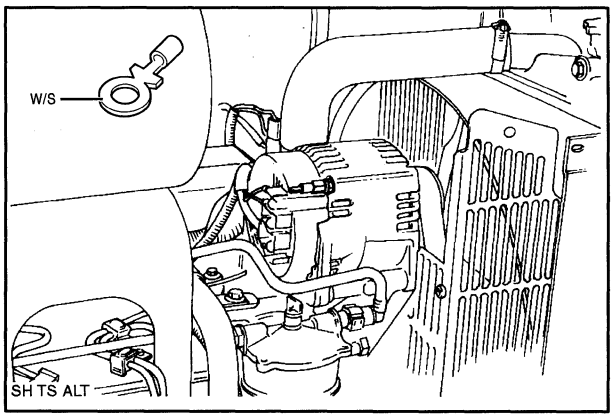

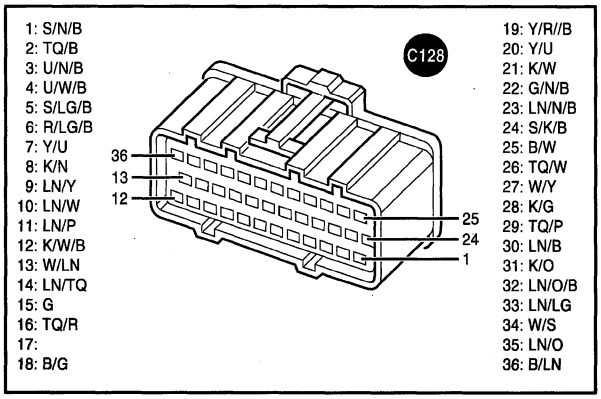

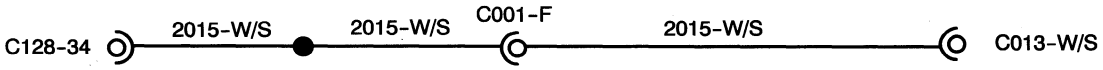

DIAGRAM 28 - Error Code E27 displayed - ERPM signal not present

Wheel speed sensor open or short circuit.

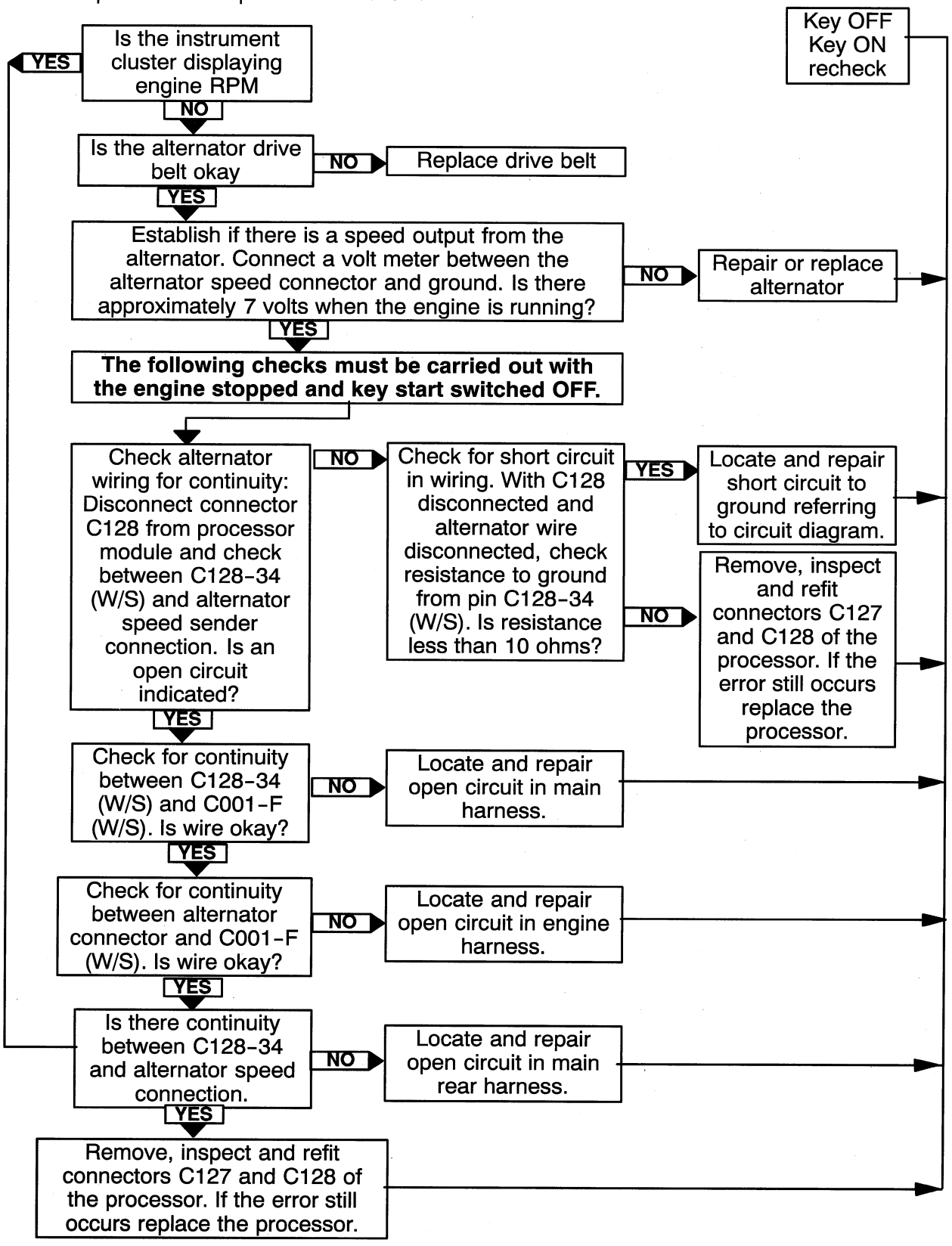

DIAGRAM 29 - Error Code N displayed

Clutchless shuttle operation attempted at too high a speed and in too high a gear

A warning bleeper and symbol 'N' are activated under the following conditions:

- In high range 5-8 gears, shuttling while tractor is still rolling.
- In high range 2-4 gears, shuttling while tractor is rolling faster than 9 Km/h (5.5 mph)

Important: *The clutchless shuttle will still operate under the warning conditions. Clutch damage may occur if the shuttle operation is carried out.*

Electroshift (16 x 16) Power Shuttle Transmission

CONTENT

Section	Description	Page
	Specifications	111
	Section Drawing	112
	Tightening Torques	113
	Description and Operation	114
	Top Cover Overhaul	121
	Calibrations	124
	Fault Finding	133
	Pressure Testing	199

NOTE: *The information contained in this Chapter is additional to that of Section 6, 16x16 Transmission. Only items relevant to the Power Shuttle are detailed in this Chapter.*

SPECIFICATIONS

Hydraulic Operating Pressure	18-20 bar (260-290 lbf.in^2)
Synchroniser Position Potentiometer	0.9-1.0kΩ between pins 2 and 3 (Pot. fully rotated) 4.5-5.0 kΩ between pins 2 and 3 (Pot. at rest) 4.5-5.0kΩ between pins 1 and 2 (Pot. fully rotated) 1.4-1.5kΩ between pins 1 and 2 (Pot. at rest) 4kΩ between pins 1 and 3 (Pot. all positions)
Forward / Reverse PWM Solenoids	8-11Ω coil resistance.

SECTION DRAWING

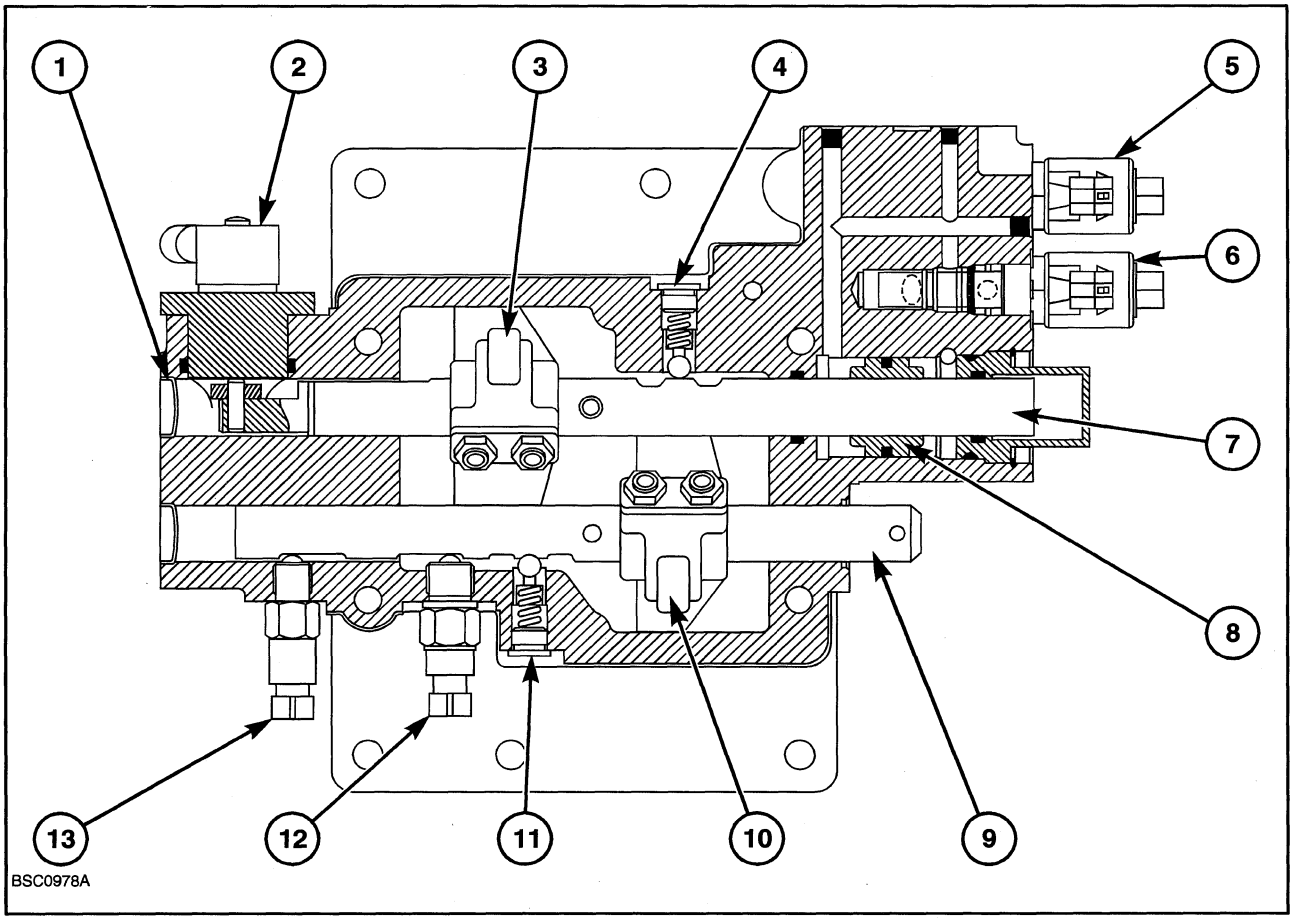

1

Top Cover Section view

1. End Plug x2
2. Synchroniser Position Potentiometer
3. Forward/Reverse Shift Fork
4. Forward/Reverse Detent Assy.
5. Reverse PWM Solenoid
6. Forward PWM Solenoid
7. Forward/Reverse Shift Rail
8. Piston
9. 1-4/5-8 Shift Rail
10. 1-4/5-8 Shift Fork
11. 1-4/5-8 Detent Assy.
12. 5-8 Engaged Switch
13. 1-4 Engaged Switch

TIGHTENING TORQUES

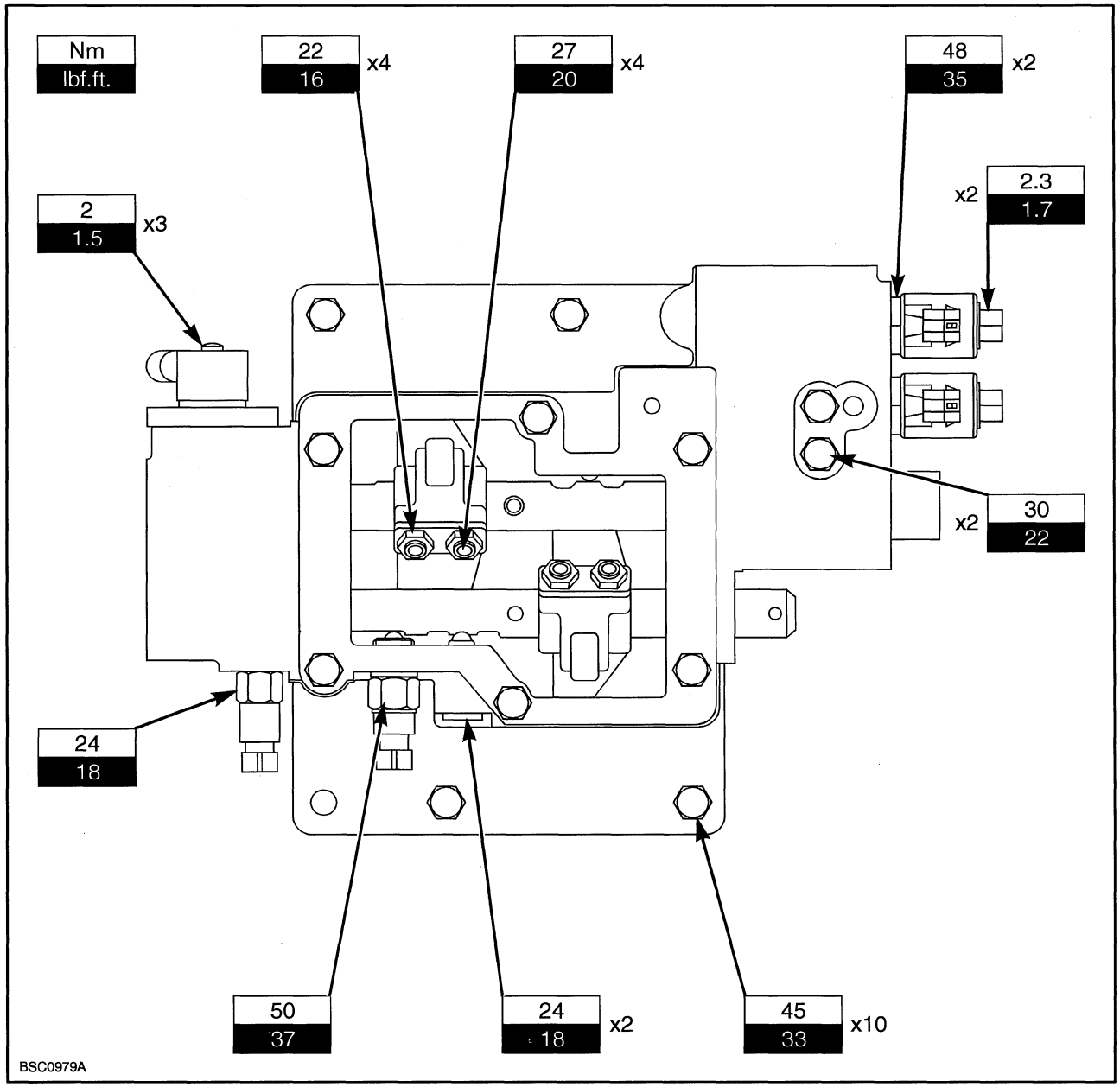

2

DESCRIPTION AND OPERATION

The 16 x 16 transmission with Left Hand Shuttle is available as either a 30 Km/h or 40Km/h configuration.

An optional Creeper is available providing an additional 8 forward and 8 reverse speeds.

The transmission is also available with or less four wheel drive.

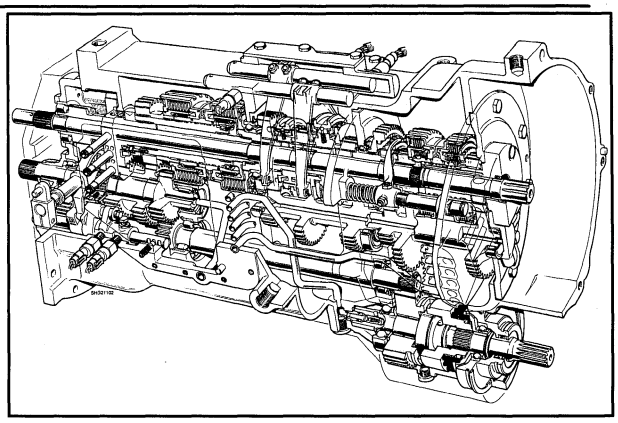

3

The pressure oil to engage the clutches is supplied from the Low Pressure Hydraulic Circuit, which is maintained at 17 to 19 bar by the Low Pressure Regulating Valve (1), located in the valve block on the CCLS pump assembly.

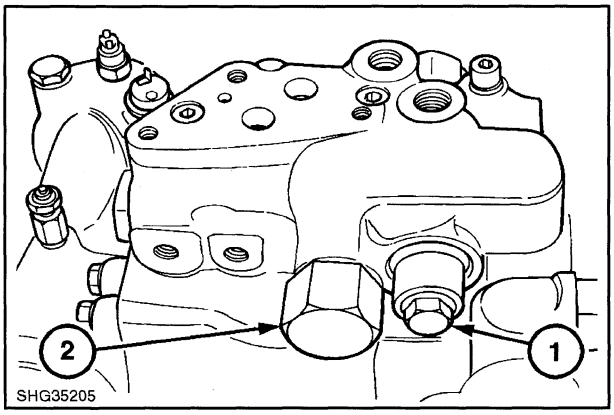

4

Transmission lubrication oil is supplied via the steering circuit and is controlled to a maximum pressure of approximately 7 bar by the Lubrication Relief Valve (4) located in the transmission side cover.

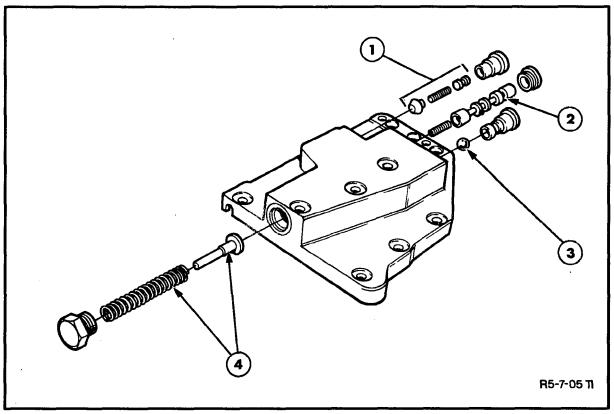

5

An Oil Cooler By-pass Valve, located on the right hand side of the transmission, ensures that excessive oil generated at cold start up, or if the oil cooler becomes blocked, bypasses the cooler until the the oil warms up (above 62°C) or the pressure drops.

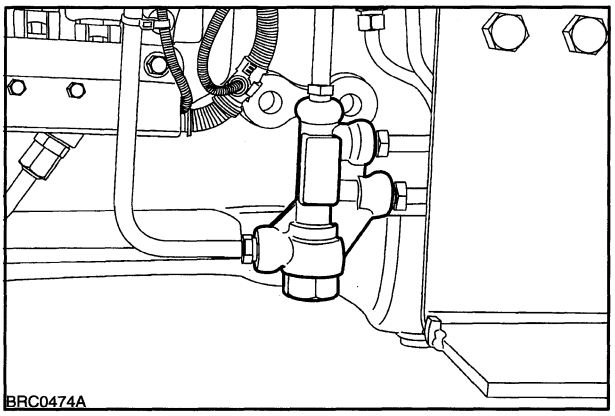

6

The Low Pressure Circuit incorporates a hydraulic accumulator, located on the right hand side of the transmission. This provides instant additional oil to fill possible voids when shifts involving multiple clutches are performed.

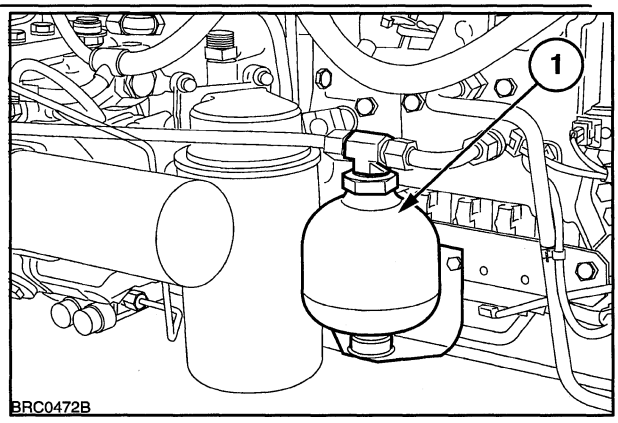

7

The transmission drive can be broken down into 3 groups as follows:

C1 and C2 clutches - located at the front of the transmission to work in conjunction with C3 and C4 to give 4 basic ratios.

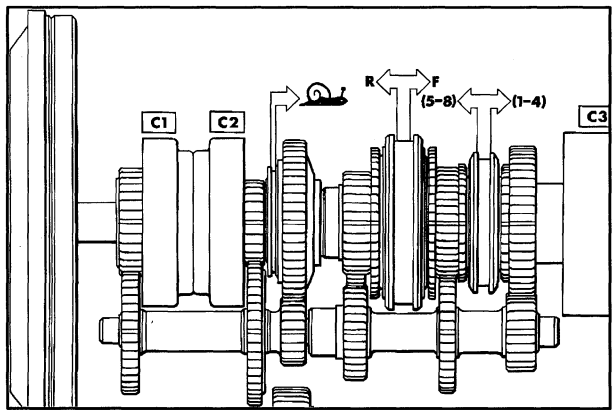

8

The Forward/Reverse synchroniser - located in the mid section of the transmission to select forward or reverse drive, electro-hydraulically operated by PWM valves.

1-4/5-8 synchroniser - located just behind the forward/reverse synchroniser for manual mechanical range selection.

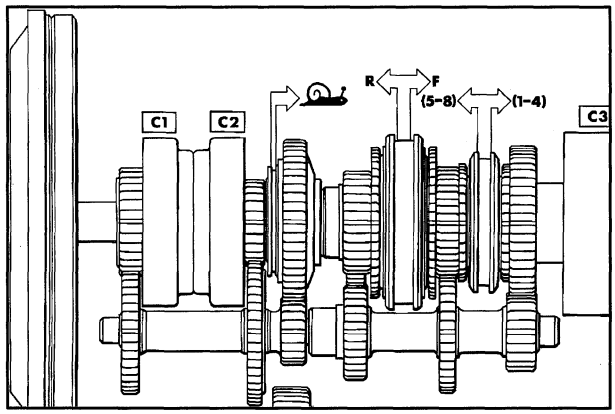

9

C3 and C4 clutches located in the rear section of the transmission each supplying a single speed in conjunction with C1 and C2 to give 4 basic ratios.

High and Low synchroniser located at the rear of the transmission when combined with C1, C2, C3, C4 clutches and 1-4 / 5-8 synchroniser provide 16 forward and 16 reverse ratios.

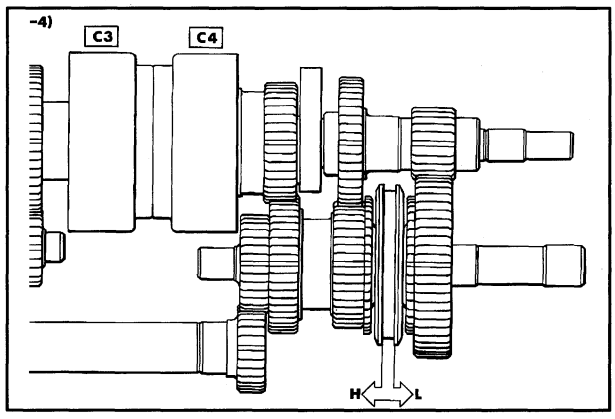

10

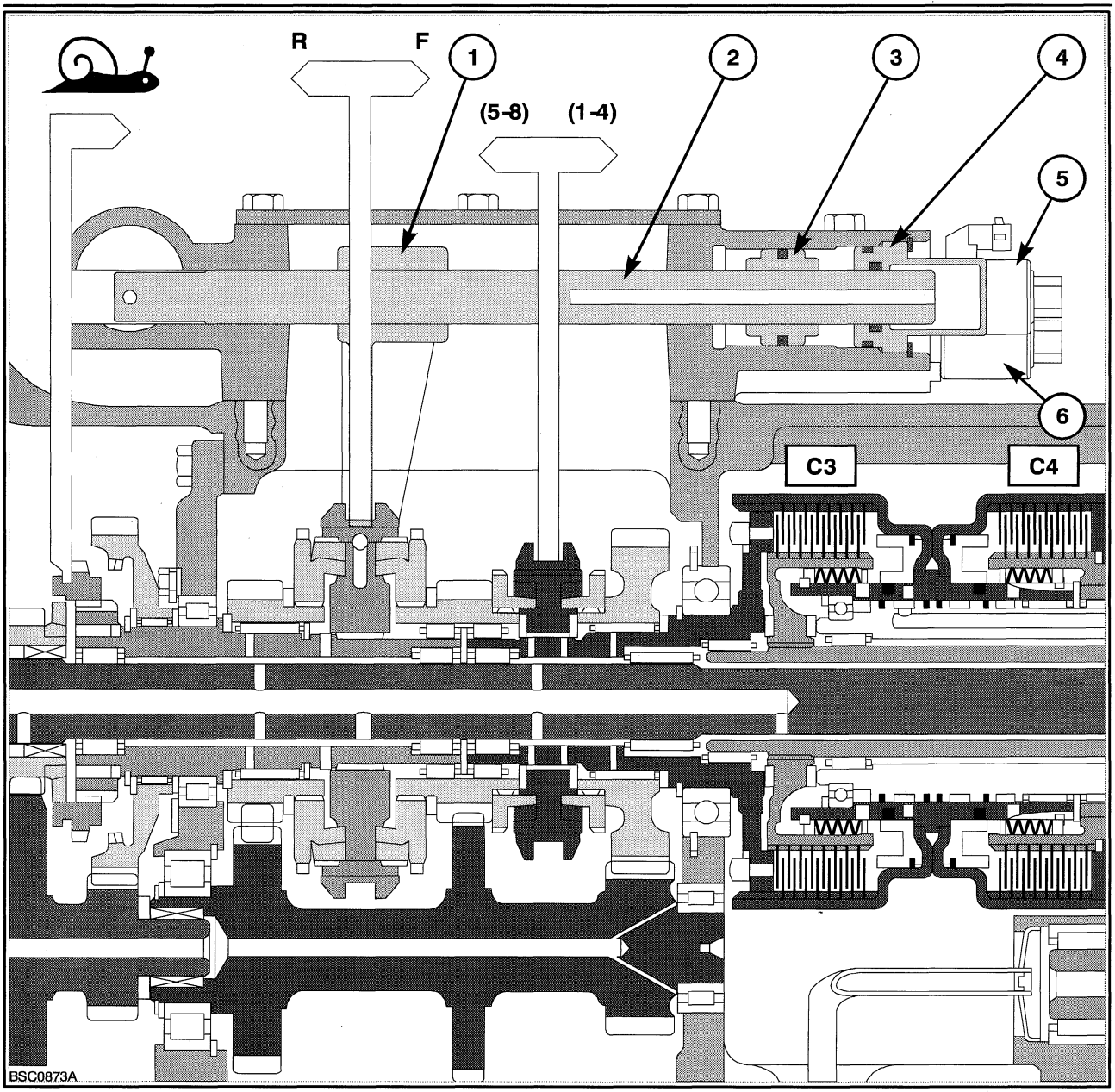

11

FORWARD / REVERSE SYNCHRONISER

1. Synchroniser Fork
2. Shift Rail
3. Forward/Reverse Actuating Piston
4. End Cap
5. Reverse PWM Solenoid Valve
6. Forward PWM Solenoid Valve

MicroProcessor

When the shuttle lever is moved to either the forward or reverse position, the microprocessor, via the top cover potentiometer will determine if the synchroniser is in the correct position.
If it is not the electro hydraulic system will move the synchroniser before drive is engaged.
Then, unless the clutch pedal is depressed the appropriate clutch PWM valves will be energised.

When the shuttle lever is moved to the neutral position the control system will immediately disengage all energised clutch PWM valves.

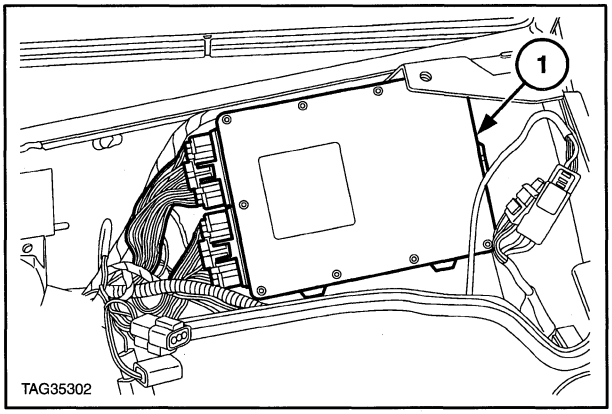

12

Forward selected

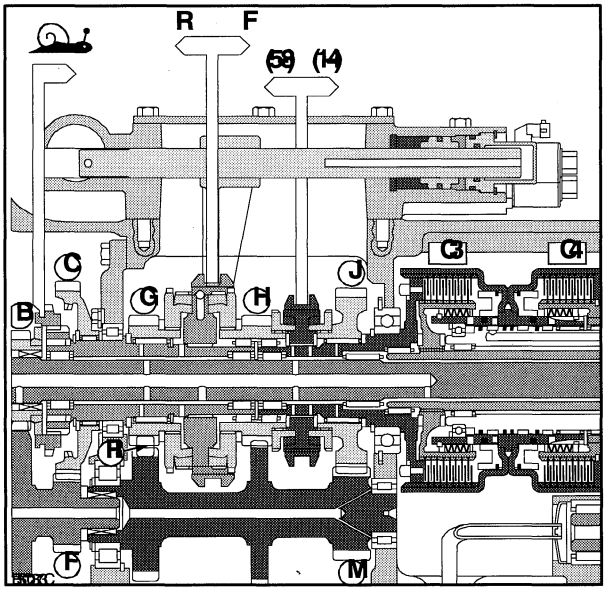

13

Reverse selected

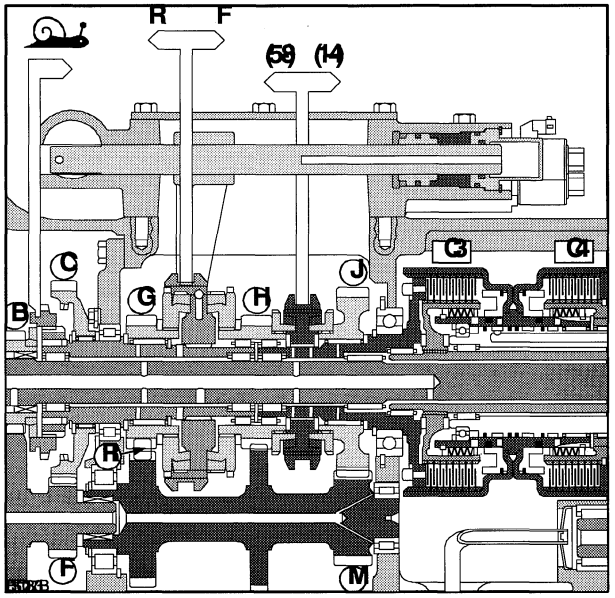

14

*The forward / reverse synchroniser has no neutral position, **do not** attempt to by-pass the shuttle lever switch.*

The engagement of the clutches is controlled by inputs from various sensors and switches:-

INPUT SENSORS

DESCRIPTION	FUNCTION	LOCATION
Transmission Output speed sensor	Provides a transmission output speed signal for the processor when the radar is not present	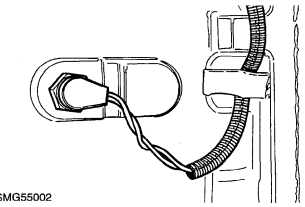 SMG55002
Transmission oil temperature sensor	Measures the temperature of the oil to provide compensation for hot/cold oil conditions.	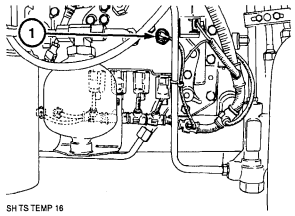 SH TS TEMP 16
Clutch pedal disconnect switch	Disengages power to range clutches (C3,C4) PWM valves, thereby disengaging drive.	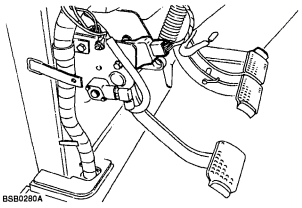 BSB0280A
Clutch pedal potentiometer	Provides operator controlled engagement of the feathering (C3,C4) clutches.	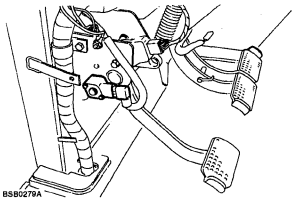 BSB0279A
Shuttle lever	Provides information to the processor,via switches, for forward, reverse and neutral transmission drive selection. Disengages power to all transmission PWM valves when in neutral.	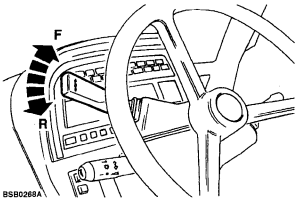 BSB0268A
Forward Reverse Potentiometer	Provides information to the processor about the position of the forward and reverse synchroniser	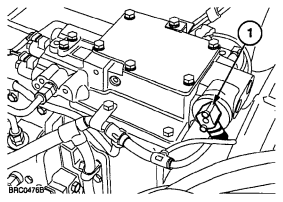 BRC0476B
Gear shift switches	Allows the operator to shift between 4 basic ratios within a range via push buttons switches sending a signal to the processor, without using the clutch pedal.	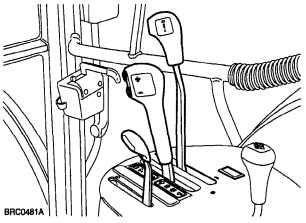 BRC0481A

INPUT SENSORS

DESCRIPTION	FUNCTION	LOCATION
Synchroniser Status switches	Provides information to the processor about the position of the 1-4/5-8 and High/Low synchronisers	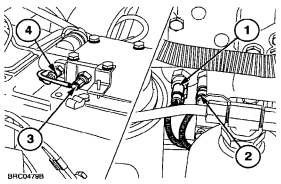
Handbrake switch	To be applied during calibration, error code if not applied. Tractor will drive if handbrake applied but audible alarm sounds.	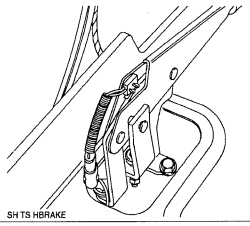
Creep engage switch	Informs the processor when creeper has been selected, preventing selection of high range.	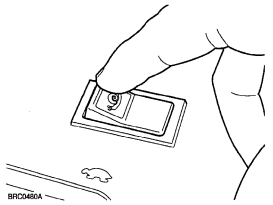
Alternator	Provides an engine speed signal to the processor.	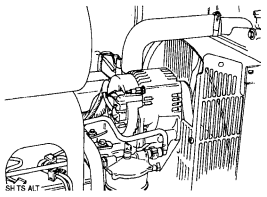
Seat Switch	Seat switch must be operated, ie, operator seated, before the processor allows engagement of forward or reverse drive. (Note, a faulty switch can be over ridden by the clutch pedal).	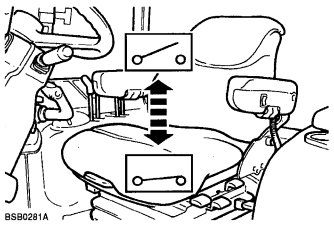

OUTPUT DEVICES

DESCRIPTION	FUNCTION	LOCATION
Clutch PWM valves,C1, C2, C3, C4	Controls oil to the clutches to engage/disengage the clutches via a signal from the processor.	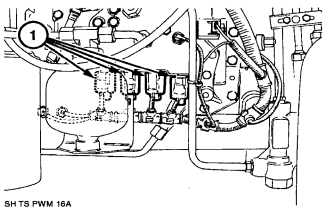

Forward and Reverse PWM Valves	Controls oil to the transmission top cover to operate the synchroniser to select forward or reverse via a signal from the processor.	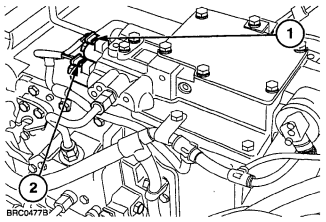
Instrument Cluster Display	Provides operator information as to which ratios are selected and error code information.	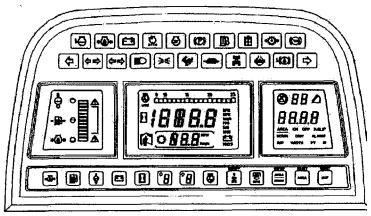

CONTROL DEVICE -

DESCRIPTION	FUNCTION	LOCATION
MICRO PROCESSOR	The transmission is controlled by a micro processor, on the right hand side under the EDC Control Panel. The processor has 3 - 36 way connectors and in addition to controlling the transmission it also controls the Electronic Draft Control system. The trans mission has an inbuilt diagnostic facility which can interpret a number of system faults and display an error code in the transmission display.	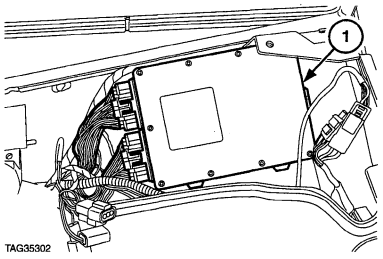

TOP COVER OVERHAUL

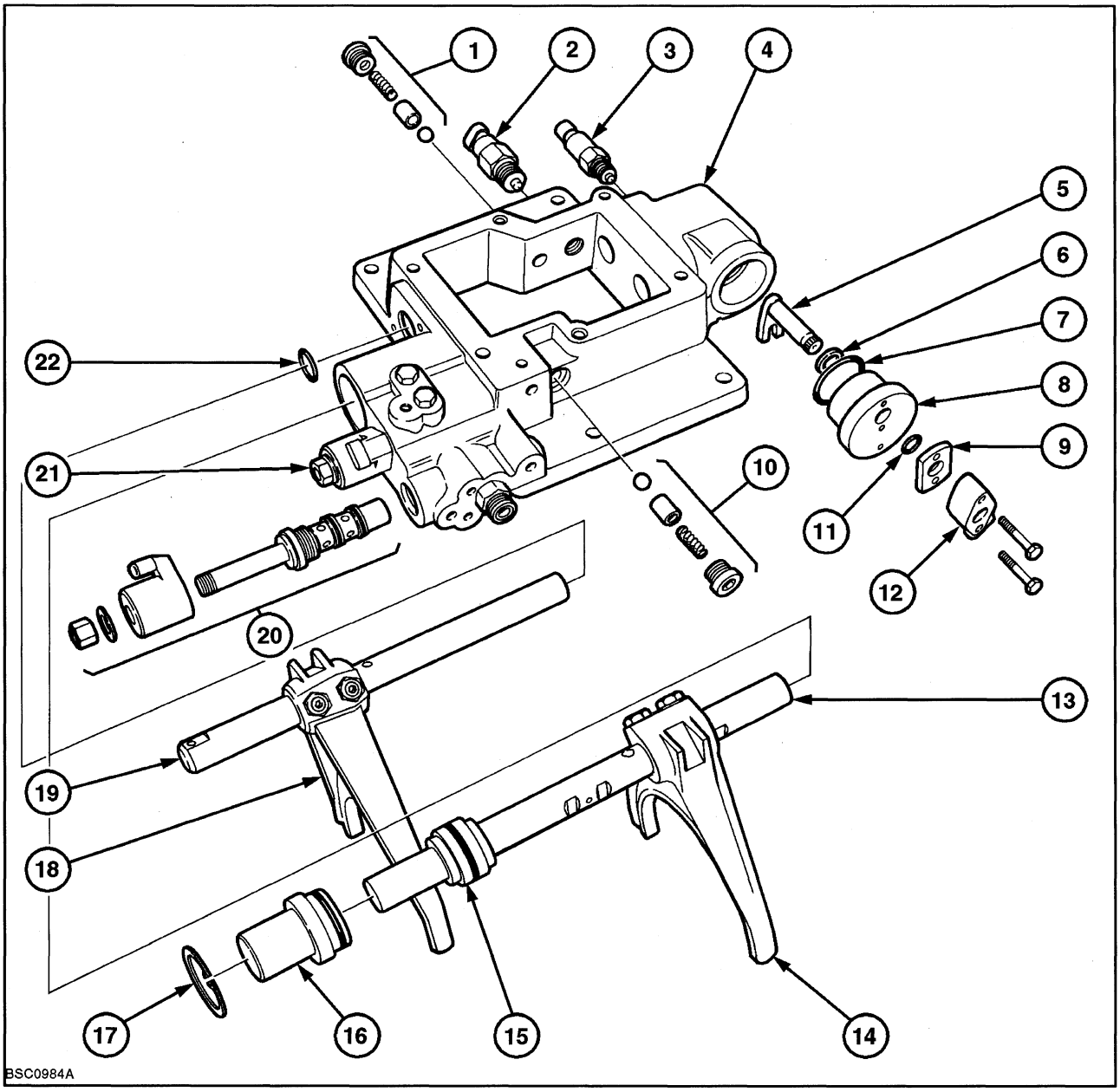

15

Top Cover Exploded View

1. 1-4/5-8 rail detent assembly
2. 5-8 range engaged switch
3. 1-4 range engaged switch
4. Top cover
5. Potentiometer operating shaft
6. Shaft spacer
7. 'O' ring seal
8. Shaft support
9. Potentiometer spacer
10. Forward/reverse detent assembly
11. 'O' ring seal
12. Forward/reverse potentiometer
13. Forward/reverse fork rail
14. Forward/reverse shift fork
15. Forward/reverse piston and seal
16. End cap
17. Circlip
18. 1-4/5-8 shift fork
19. 1-4/5-8 fork rail
20. Reverse PWM solenoid
21. Forward PWM solenoid
22. 'O' ring seal

REMOVAL

1. Remove the cab mat and floor.
2. Disconnect the wiring to the forward and reverse PWM solenoids, the 1-4 and 5-8 status switches and the synchroniser position potentiometer.
3. Disconnect the 1-4/5-8 fork rail operating cable.
4. Disconnect the hydraulic feed tube.
5. Remove the four bolts securing the cover to the transmission and carefully lift away.

⚠ WARNING ⚠

The Top cover assembly is awkward and heavy. Obtain an assistant to help with removal.

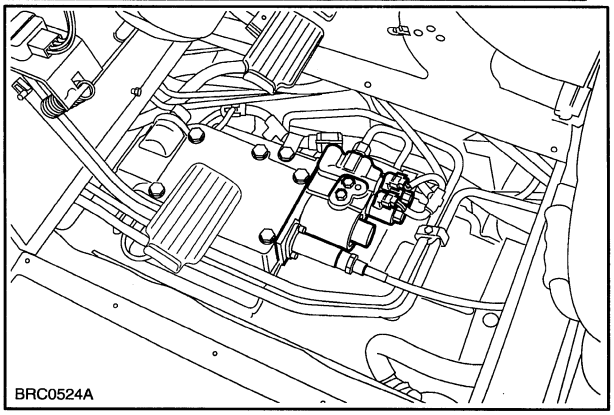

16

DISASSEMBLY (REFERENCE FIGURE 15)

Disassemble the top cover using the the following sequence:

6. Remove the 1-4 and 5-8 status switches.
7. Remove the 2 detent assemblies.
8. Remove the synchroniser position potentiometer, shaft housing and operating shaft.
9. Remove the 2 PWM solenoid valve assemblies.
10. Loosen the 1-4/5-8 fork to rail lock screws. Carefully tap the rail out from the rear end, pushing the end plug out in the process.
11. Remove the forward/reverse shift rail. Remove the circlip and end cap of the forward/reverse rail. Loosen the shift fork retaining screws. Through the potentiometer housing orifice carefully pry the forward/reverse shift rail from the top cover.

INSPECTION

1. Thoroughly clean the top cover, ensuring that the oil galleries from the PWM valves to the shift rail piston are free from any debris.
2. Inspect the shift rails and forks. Replace if bent and in the case of the forks, the fork tips appear excessively worn.
3. Inspect all the 'O' ring seals. It is advisable to replace all of the 'O' rings as standard practice. If the seal on the forward/reverse piston appears in anyway damaged or suspect it should be replaced.

REASSEMBLY

Reassembly is the reverse of the disassembly, noting the following items:

1. Coat the piston seal with transmission oil prior to assembly.
2. After insertion of the 1-4/5-8 rail install the end plug with New Holland flexible gasket sealant (82995770) applied to the plugs outer edge.
3. Adjust the fork positions on their rails using the following procedure.

ADJUSTMENT OF FORWARD/REVERSE AND MAIN (1-4/5-8) SYNCHRONISERS

To gain access to the synchroniser forks and rails it is necessary to remove the cab mat and floor.

Remove the transmission cover plate to expose the shift rails (1) and forks (2). Remove the status switches (4) and the detents (3).

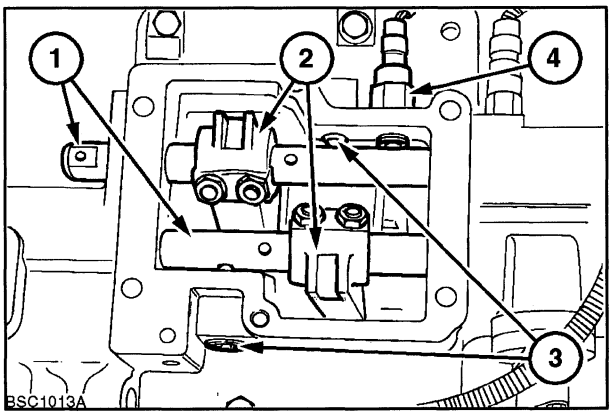

17

The adjustment procedure is the same for both synchronisers.

Using a suitable lever, fully position the synchroniser in the engaged position and measure the distance A.

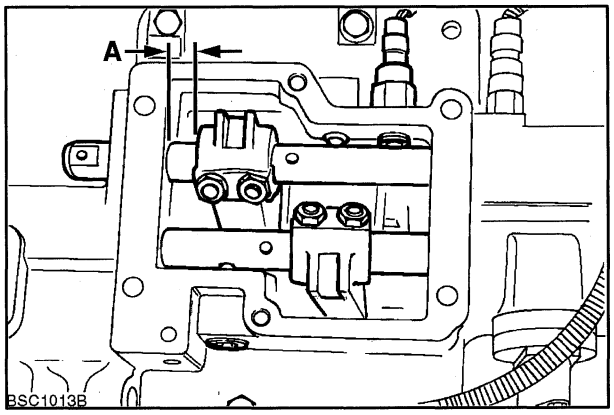

18

Now fully position the synchroniser in the opposite fully engaged position and measure distance B.

Replace the detent and set the shift rail to neutral.

Adjust the fork to its neutral position.

Neutral N = $\frac{A + B}{2}$

Tighten the fork lock screws.

Re-install status switches and top cover.

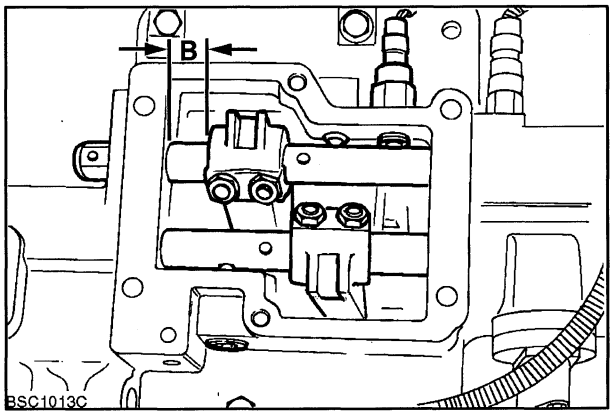

19

TRANSMISSION CLUTCH AND SYNCHRONISER CALIBRATION

Required when any of the following items have been performed or noticed:-

- The microprocessor has been replaced.
- The non volatile memory of the processor has been reset (Mode H8 Performed).
- A clutch or synchroniser PWM solenoid valve has been replaced.
- A clutch pack has been overhauled.
- The forward/reverse synchroniser potentiometer has been replaced.
- The forward/reverse synchroniser has been replaced.
- The shift quality or clutch featherability has noticeably deteriorated.
- A delay or jerky drive engagement when using the clutch pedal for inching operations also during shuttle shifts or automatic take off without using the clutch pedal.
- A delay in drive engagement when making powershifts.

If, after the auto clutch calibration has been performed, using H1 mode, the shift/shuttling is still not as required, then the calibration may be fine tuned manually, using the H2 mode.

Clutch fill time calibration (HE Menu Mode)

Required if the following has been noticed:-

- A clunk is heard when engaging the clutch during inching operations.

Clutch and Synchroniser calibration set up Procedure:

Prior to conducting a transmission clutch calibration, the following points should be checked:

- The temperature of the transmission oil is warm, at least 20°C (68°F).
- The parking brake is applied
- The air conditioning, if fitted, is switched off.
- All electrical and hydraulic services are deselected.

⚠ WARNING ⚠

The calibration procedure is controlled by the electronic management system. To prevent inadvertent movement of the tractor, park the tractor away from any obstacles, firmly apply the parking brake and block the wheels, front and rear.

SPRING PRESSURE AND SYNCHRONISER CALIBRATION

Entering the calibration mode :

Press and hold both the upshift and downshift buttons whilst starting the tractor.

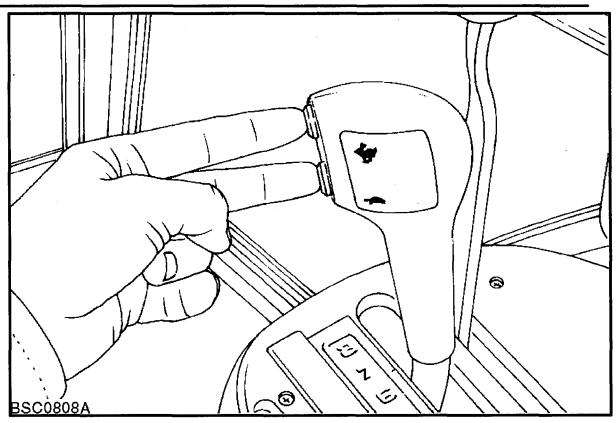

20

Alternative method :

Install diagnostic tool 4FT950 into the Black diagnostic connector, located by the fuse box.

Start the tractor.

Enter mode H1.

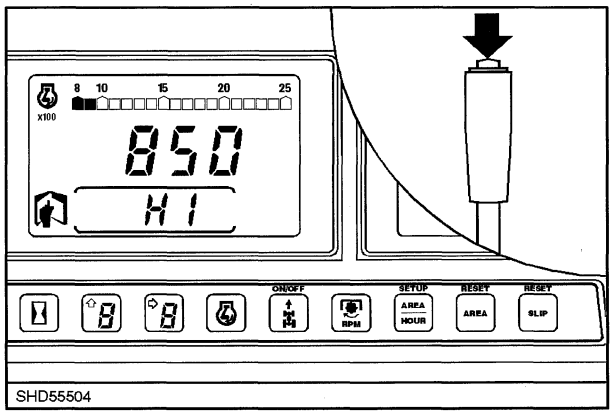

21

The word CAL should appear on the instrument cluster display. This will be replaced after a few seconds by the oil temperature, in degrees Celsius.

Set the engine speed to 1200 +/- 100 rpm.

NOTE: *The engine RPM must be stable with no noticeable surging. If necessary, adjust the throttle position to achieve this, still remaining within the 1200 +/- 100 rpm range.*

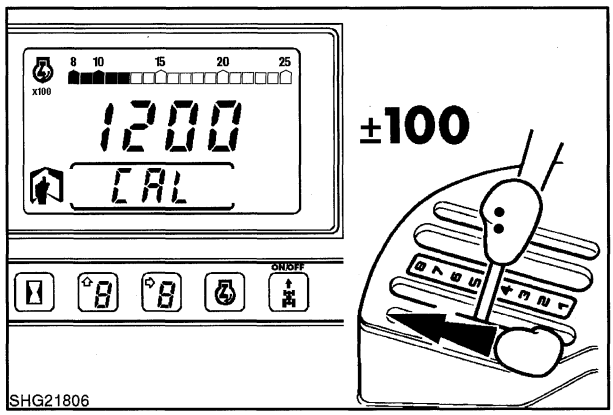

22

C3 and C4 Calibration

Place the two gear levers in the forward position.

NOTE: *No need to use the clutch pedal.*

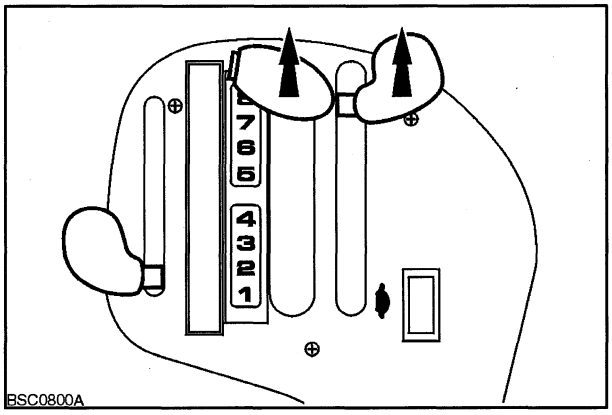

23

Move the shuttle lever into the forward drive position.

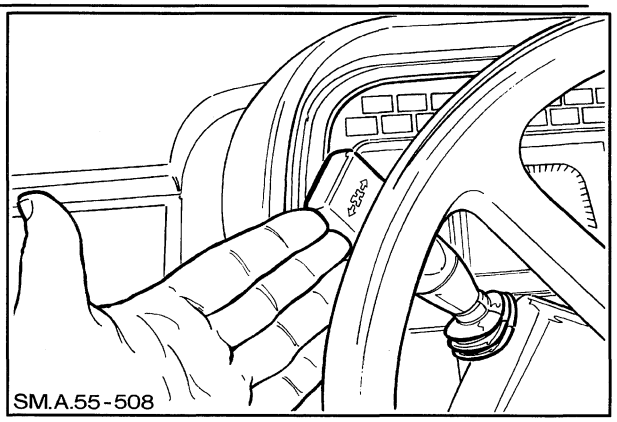

24

IMPORTANT: *The shuttle synchroniser **must** be calibrated before further calibration of the transmission is attempted. Failure to observe this procedure will result in error code U36 showing in the gearshift display.*

Forward/Reverse Synchroniser calibration:

Press and hold the upshift and downshift switches, the display will show 'Soc'. Continue to hold the upshift and downshift buttons.

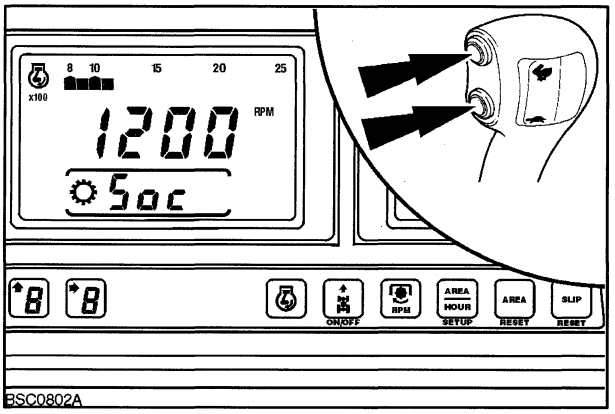

25

The gearshift display will now sequence through figures '1', '2', '3' and '4'. When the display reads 'End', calibration of the transmission synchronisers has been completed, release the upshift and downshift buttons.

The display then returns to CAL then temperature display.

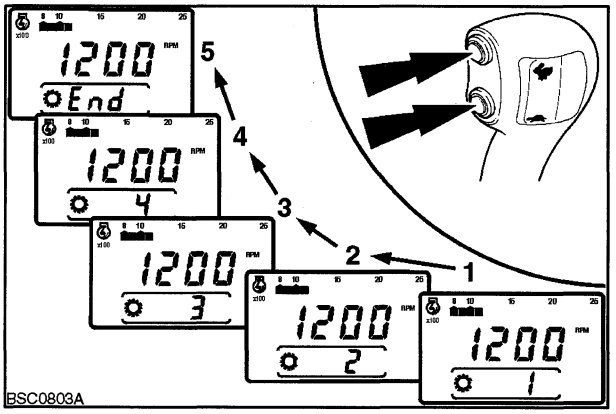

26

C3 calibration :

Press and hold the Upshift button.

If the start up procedure was incorrect, a U code will be displayed. (see page 6-128).

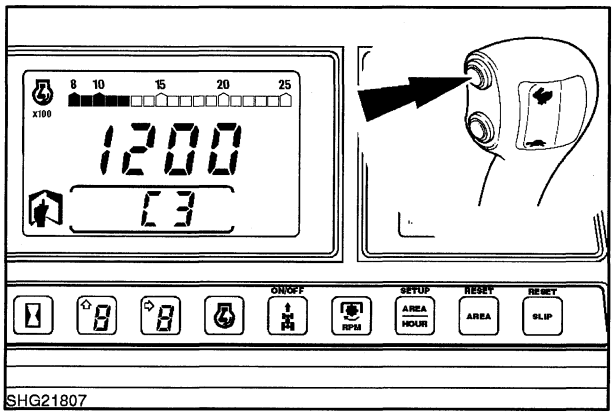

27

The display will change to show a number.

This number will flash and begin to scroll up, as the clutch is calibrated.

When the processor detects a decrease in engine rpm of 30, the calibration stops. This is indicated by a fixed, non flashing number.

Release the Upshift button.

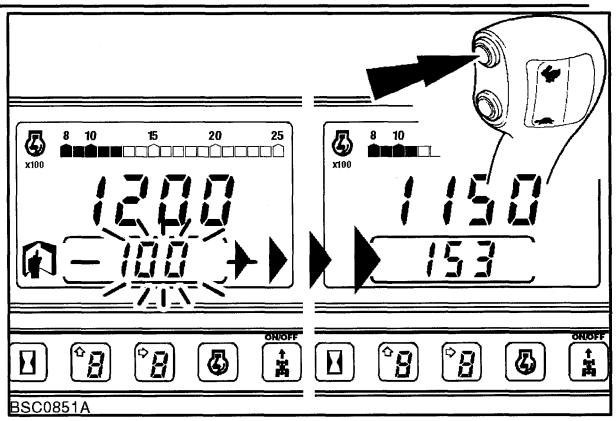

28

C4 calibration :

Use the downshift button to calibrate the C4 clutch in the same manor as the C3 clutch.

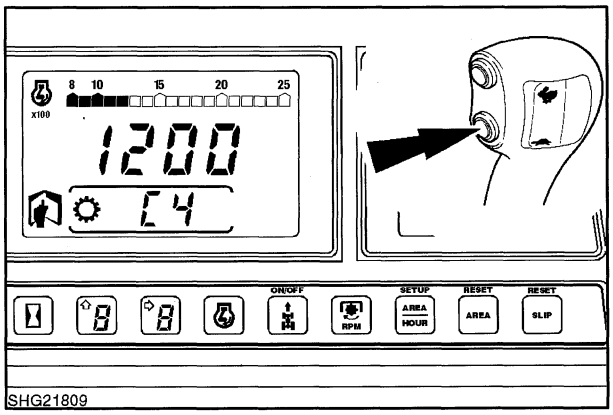

29

The display is similar to the C3 calibration.

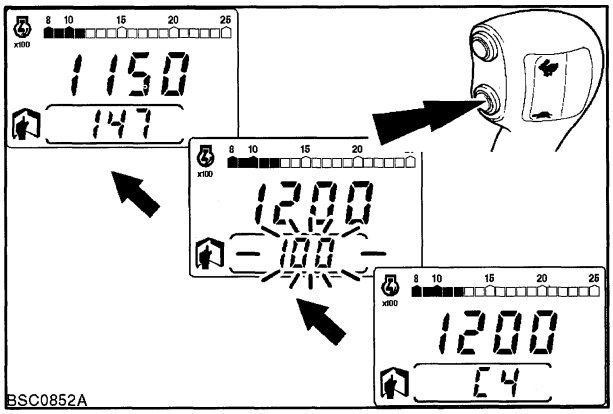

30

C1 and C2 calibration :

Place the range lever in neutral, leaving the main lever in the forward position. Leave the shuttle lever in the forward drive position.

Set the engine speed to 1200 +/- 100 rpm.

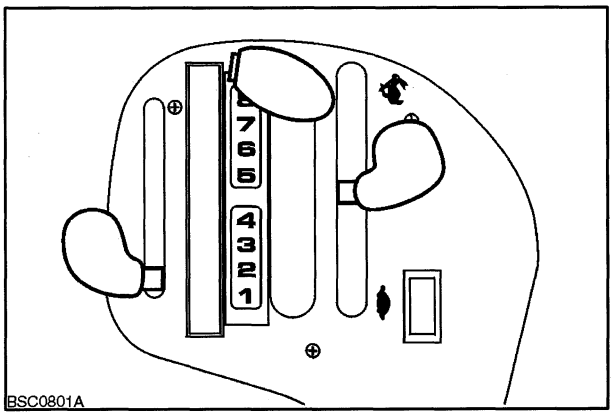

31

Press and hold the Upshift button to calibrate the C1 clutch.

Press and hold the Downshift button to calibrate the C2 clutch.

The procedure is the same as that for the C3 and C4 clutches.

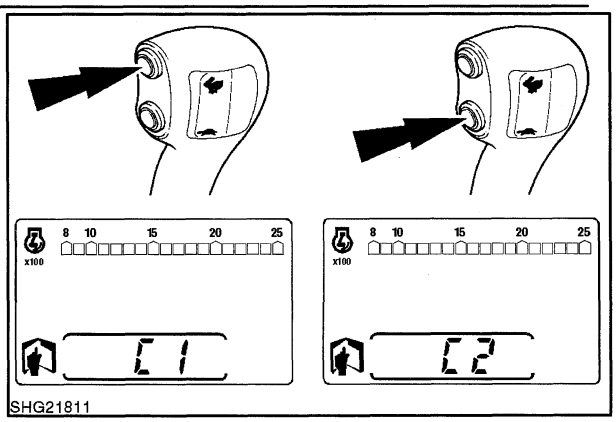

32

Spring Pressure Calibration Error Codes :

U20	-	Handbrake not applied
U21	-	Engine rpm too low
U22	-	Engine rpm too high
U23	-	Forward / Reverse shuttle lever is not in Forward
U24	-	Main lever is not in 5-8 range
U25	-	Range lever in low range
U26	-	Clutch pedal is not fully released
U27	-	C3 calibration too low
U28	-	C3 calibration too high
U29	-	C4 calibration too low
U30	-	C4 calibration too high
U31	-	Wheel motion detected during calibration
U32	-	C1 calibration too low
U33	-	C1 calibration too high
U34	-	C2 calibration too low
U35	-	C2 calibration too high
U36	-	Synchroniser not calibrated - Must calibrate synchroniser first
U37	-	Synchroniser reverse position outside limits
U38	-	Synchroniser forward position outside limits
U39	-	Reverse Synchroniser, no movement at maximum pressure
U40	-	Forward Synchroniser, no movement at maximum pressure

H2 MENU MODE -

Display of Clutch/synchroniser calibration values and C3/C4 manual adjustment

NOTE: *The tractor is driveable in this mode.*

Install the diagnostic switch, Tool No. 4FT 950, and start the engine.

Select mode H2 using the diagnostic switch.

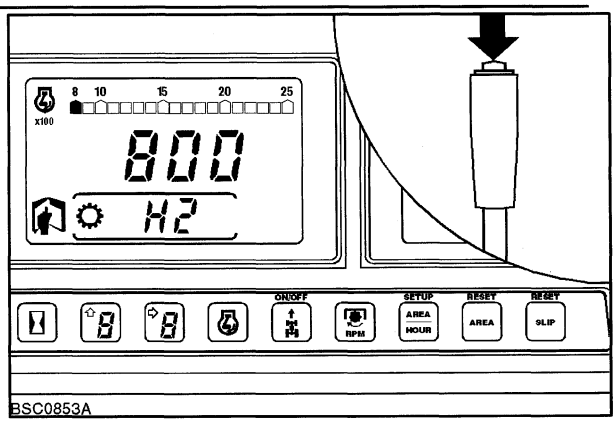

33

The calibration values are displayed in the following sequence:

	Range of Values
Clutch 1	101-240
Clutch 2	101-240
Clutch 3	101-240
Clutch 4	101-240
Synchro position signal reverse	655-963
Synchro position signal forward	61-376

Display then returns to Oil temperature.

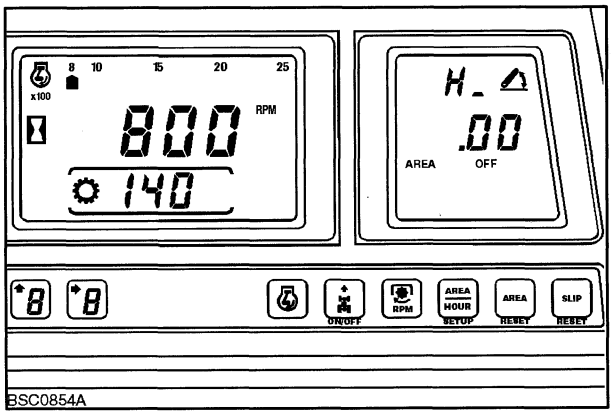

34

After the values have been displayed it is possible to adjust the C3 and C4 clutches.

The transmission oil temperature should be at least 40°C.

Depress the clutch pedal, select either gear 7L (C4 is used) or 8L (C3 is used), with the shuttle lever in forward, release the clutch pedal and perform shuttle shifts driving the tractor at between 1500-1800 rpm.

NOTE: *The tractor can be driven in all gears but Powershifts are not possible. The tests are performed in the low range because this is more sensitive to calibration changes.*

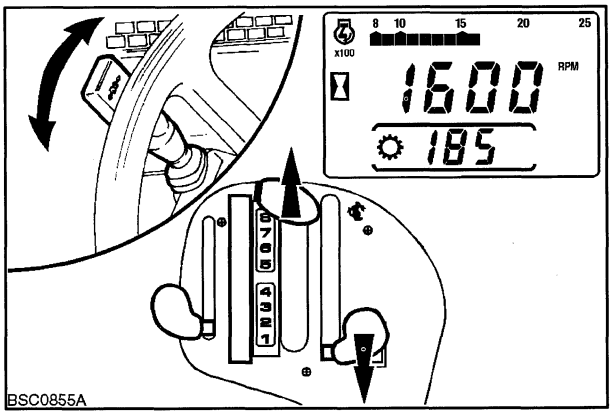

35

If the shuttle shifts require fine tuning:-

While driving the tractor, with the clutch pedal fully released, the clutch value is displayed and may be adjusted using the up and down powershift switches. Make only small adjustments and shuttle to test the performance.

⚠ WARNING ⚠

Take care to remain observant to the outside surroundings during these adjustments.

NOTE: *If the shuttle lever is moved to neutral the display will show either C3 or C4 depending on the gear selected.*

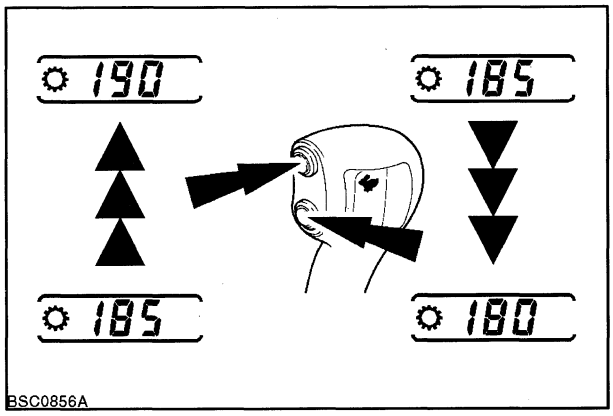

36

CLUTCH FILL TIME CALIBRATION

Set up procedure:

- Warm the oil to normal operating temperature, at least 60°C.
- Park the tractor on a level surface.
- with a diagnostic tool installed, depress the clutch, start the engine and set engine speed to 1200 +/- 100 rpm.

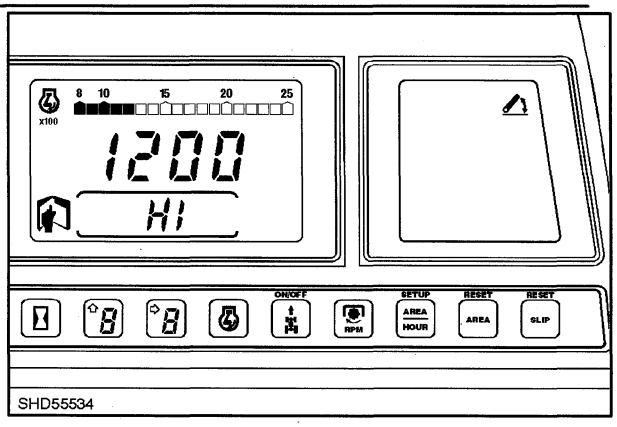

37

Entering the calibration mode :

Using diagnostic tool 4FT950 select mode **HE.**

Place the 4-5 (main) and range levers in neutral, place the shuttle lever in forward and release the clutch pedal.

If the oil temperature is less than 60°C '**F1**' will be displayed, alternating with the display of oil temperature. This will NOT stop until the oil reaches 60°C.

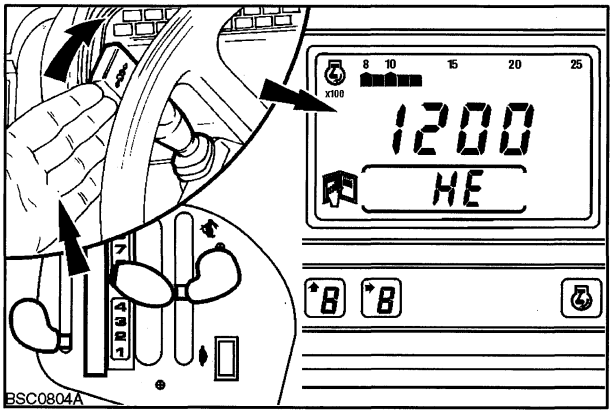

38

CLUTCH SELECTION:

While the 4-5 lever is in neutral, the display will indicate which clutch is selected.

To select C1 or C2 the range lever must be in neutral.

To select C3 or C4 the range lever must be in the high range.

To switch between C1 and C2 or C3 and C4, press the upshift or downshift switch while the 4-5 lever is in neutral.

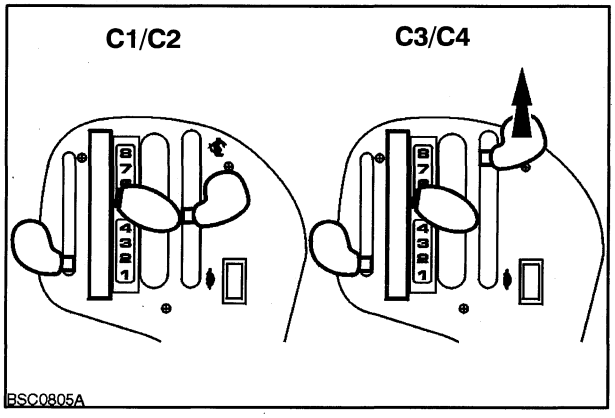

39

ADJUST AND TEST C1 OR C2

Shift the 4-5 lever into 5 (forward).

This display will show C1 or C2 and to the left of this a sequence of horizontal lines will appear to indicate a ramping up of pressure on the C3 and C4 clutches to prevent output rotation of the C1 and C2 clutches.

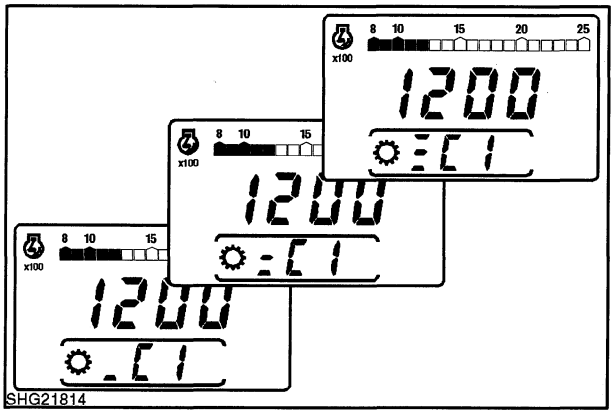

40

The display will then change to a single digit number which is indicating the quickfill time in 10 millisecond units.

This can be adjusted using the upshift and downshift switches.

The factory default setting is 3.

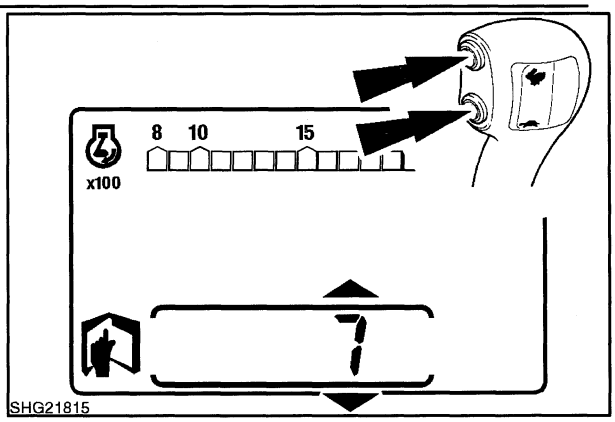

41

To test the quickfill setting, press and hold both the upshift and downshift buttons. The display will show 'FILL' The transmission will automatically engage and release appropriate clutches.

NOTE: *If nothing appears to happen depress the clutch, cycle the shuttle lever and release the clutch to re-enable the transmission.*

To adjust, reduce the value until no 'clunk' is evident, then increase the value until there is a distinct 'clunk' evident.

Then reduce the value by 2.

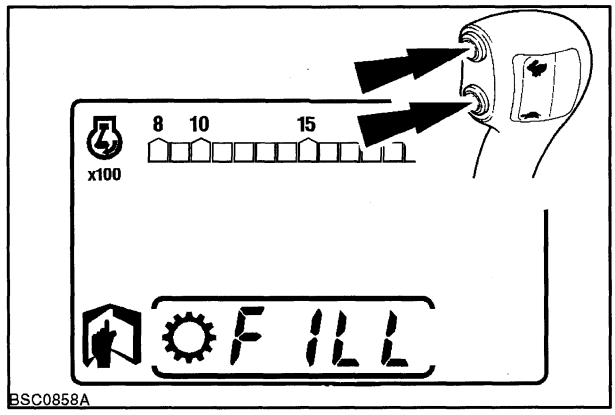

42

ADJUST AND TEST C3 OR C4

Ensure that the handbrake is OFF.

If coming from C1/C2 testing, shift both the 4-5 and range levers to neutral.

Shift the range lever into the high range.

Shift the 1-4/5-8 lever into 5-8 range).

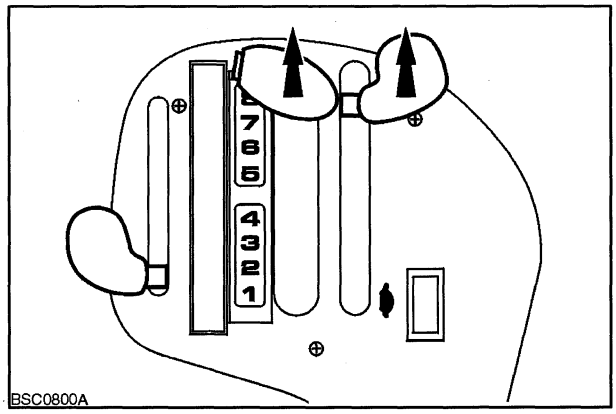

43

This display will show C3 or C4 and to the left of this a sequence of horizontal lines will appear to indicate a ramping up of pressure on C1 clutch to connect C3 and C4 to the engine.

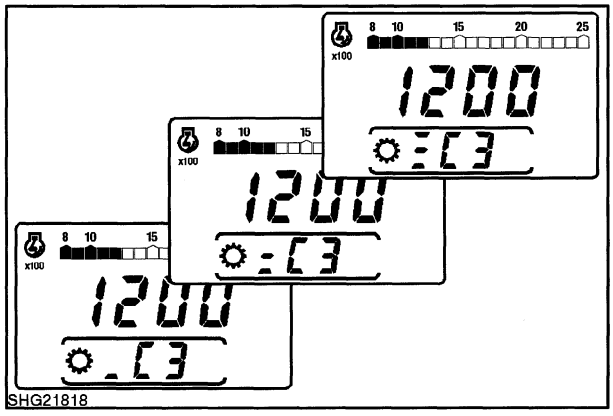

44

The display will then change to a single digit number which is indicating the quickfill time in 10 millisecond units.This can be adjusted using the upshift and downshift switches.

The factory default setting is 4.

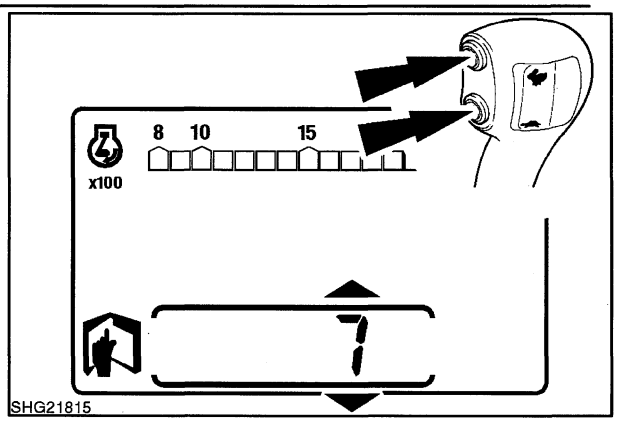

45

To test the quickfill setting, press and hold both the upshift and downshift buttons.

The display will show 'FILL' while C3 or C4 is engaged briefly. The display will then show the clutch selected followed by the quickfill value.

NOTE: *If nothing appears to happen depress the clutch, cycle the shuttle lever and release the clutch to re-enable the transmission.*

To adjust, decrease the value until the tractor does not move, then increase the quickfill just enough to cause the tractor to move.

Then reduce the value by 2.

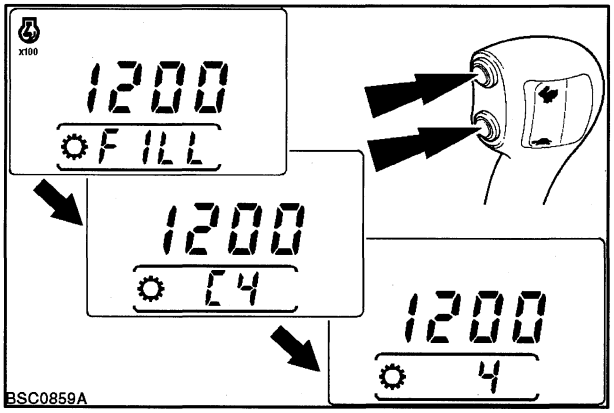

46

The transmission / EDC electronic management system has an inbuilt self diagnostic facility which is able to store up to 30 different errors with the hours of occurence. This facility utilises the digital display of either the EIC or AEIC instrument panels to indicate, in coded format, any malfunction in the electrical and electronic circuitry and in the processor.

It should be noted that the self diagnostic capability is generally limited to diagnosis of the electrical and electronic circuitry and related components, however, there are some codes, which can be generated if pressure switch circuits are not closed because of an actual lack of hydraulic pressure.

Any malfunction of the mechanical and hydraulic components must be diagnosed using conventional techniques, performance characteristics and tooling, such as pressure testing equipment. Full guidance for both electrical self diagnosis and conventional diagnosis is contained within this section.

Trouble-shooting and fault finding should always be carried out in a logical and planned sequence, many apparent faults associated with electronic components are often hastily diagnosed and result in the replacement of expensive components. An extra few minutes confirming the apparent fault will result in a more positive and cost effective repair.

Prior to detailed fault finding, items like the earth points and Battery should be cleaned and tested to ensure that they are functioning correctly.

With the use of micro-processors it is often that this item is blamed for any malfunction but the real truth is that this item is usually sound and that the fault is due to poor contacts in the associated connectors.

Each connector illustrated and identified in the wiring diagrams in Section 3 and referred to in the following fault finding procedure, has the same identification reference. For example, the main processor connectors are referred to as Connectors C127, C128 and C242 in the illustration and also referred to as C127, C128 and C242 in the fault finding procedure. Often in the fault finding flow chart the connector and pin are abbreviated and will read, for example, C127-10. The C127 refers to the connector and the 10 to the pin number.

Section 3 contains complete wiring diagrams, connector identifications and a list of circuit numbers as used within the circuit diagrams.

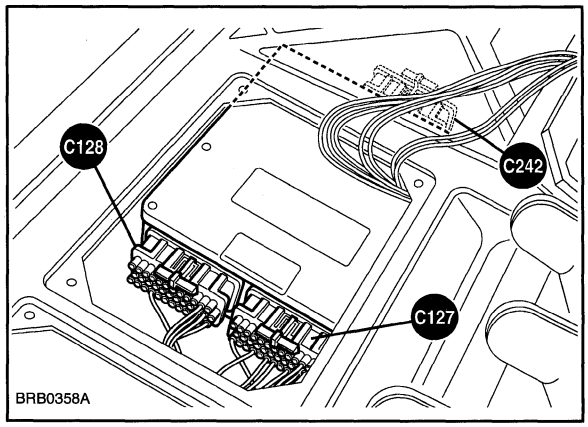

1

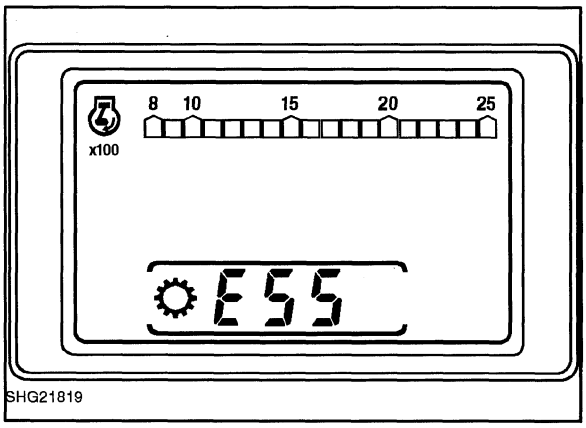

2

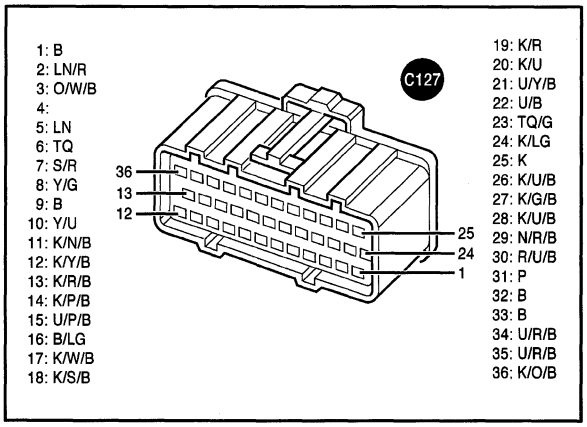

3

Where the fault finding procedure requires checks for continuity a visual inspection of the wiring should be made prior to conducting tests to ensure that obvious 'mechanical' damage has not occurred to the harness or the connectors.

Where possible the inbuilt tractor diagnostics should be utilised to determine the area of the fault.

The 'H' menu mode, described in Section 55, provides several modes to aid diagnosing faults. One particular mode which should be used, before any connections are split, is the H5, switch diagnostics mode. This will provide testing of many switch circuits, including the switch itself. If this mode highlights a fault within a circuit then more detailed fault finding can be directed towards a particular circuit.

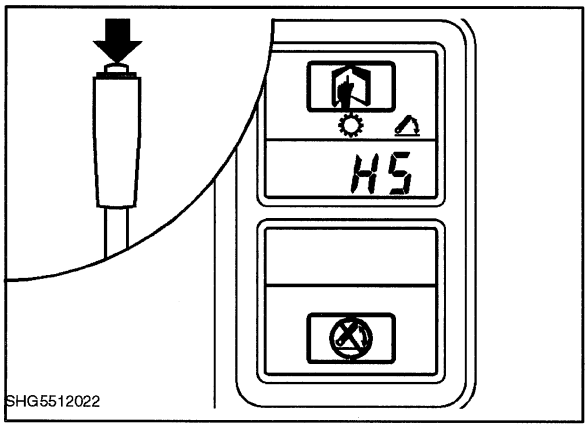

4

A good quality multi-meter is an essential item to perform fault finding. It should be capable of measuring resistance of at least 20,000 ohms and measuring voltage and current. When using the multi-meter it is good practice to select a high range and work downwards to avoid damaging the instrument.

Where possible it is recommended that connectors are probed from the rear, certain connectors like C079, C080 and C081, instrument panel connectors, should always be probed from the rear. Connector terminals should only be removed using the special tools supplied in electrical repair kit, Tool No.4FT.953 and the wires should not require excessive pulling efforts to remove.

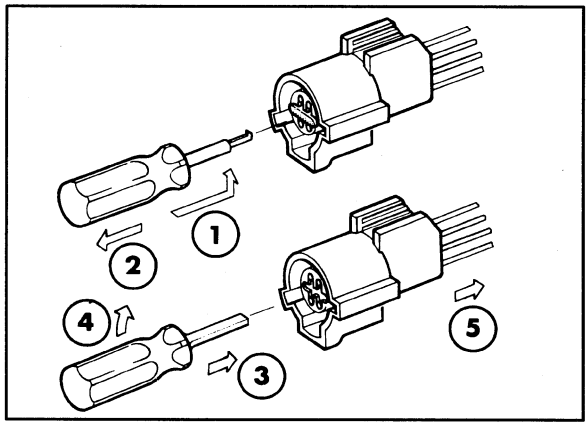

5

Where only front probing is practical it is recommended that Connector test probe kit, Tool No NH.55-125 is obtained. This provides all connector terminal attachments for use with most multi-meters.

IMPORTANT: *Care should be used when using the multi-meter, only use the instrument as instructed to avoid damage to the internal elements of the micro-processor. When checking the continuity of wiring, sensors or switches it is necessary to isolate the electronic micro-processor and ensure the keystart is turned off to prevent possible further damage. The keystart should only be switched on and the processor connected where specifically instructed in the fault finding procedure.*

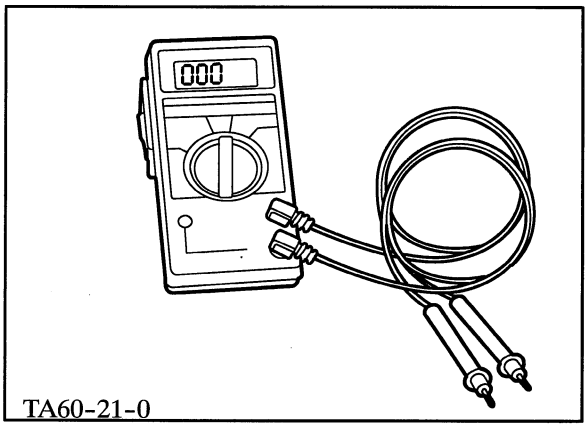

6

If it is found necessary to clean the connectors a contact spray should be used. DO NOT USE ANY OTHER METHOD FOR CLEANING TERMINALS. Do not use a cleaner that contains Trichloro-ethylene, this solvent will damage the plastic body of the connector. It is preferable to use a cleaner with a Freon T.F. base.

ERROR CODES

The transmission / EDC processor is able to create and store up to 30 error codes with the hours at which they occured and with the number of incidences that a particular error code has occured. Only error codes that prevent the tractor from driving will be displayed to the operator, other non disabling errors will be retreivable by a technician through the H menu mode of the tractor diagnostics.

It should be noted that the hours displayed is not related directly to the hour meter. For example if the occurence hours shows '10' this indicates that the error occured 10 hours ago, not at 10 hours of operation.

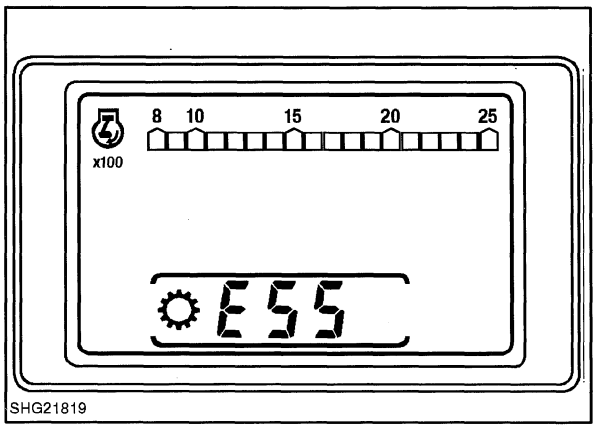

7

The following 'H' menu mode routines are provided to allow access to Error codes:

Hb - Retrieve error codes for viewing.

Hc - Clear processor memory of stored error codes

Hd - View error codes live. This allows normal operation of the tractor with error codes able to display as they occur.

A full description of the 'H' menu routines can be found in Section 55.

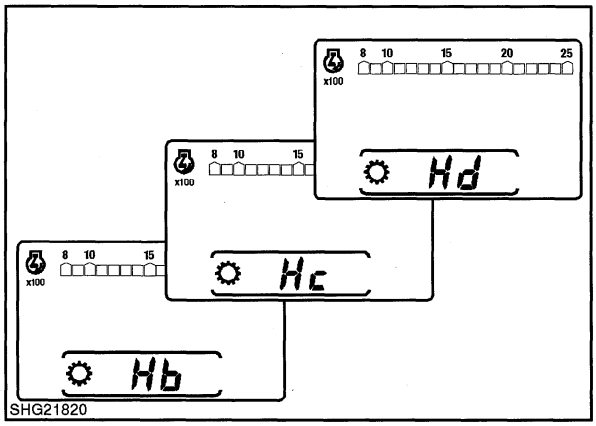

8

It should also be noted that after installation of a new processor or after a non volatile memory reset operation ('H' menu mode, H8), that the processor defaults to a 'display all codes' mode for 6 minutes. If no error codes occur during this 6 minute period the processor then reverts to normal operation. If an error occurs during this period the processor will continue to display 'live' error codes until all the errors are removed.

16x16 Electroshift Power Shuttle Transmission Error Codes

Error	Fault Condition	Enabled/ Disable?	Error Displayed?
E21	Chassis harness disconnected	Disable	Yes
E53	5 Volt Reference failed, shorted to 12 volts	Disable	Yes
E54	5 Volt Reference failed, shorted to ground	Disable	Yes
E12	Clutch pedal potentiometer signal too high	Disable	Yes
E11	Clutch pedal potentiometer signal too low	Disable	Yes
E39	C4 clutch solenoid open circuit	Disable	Yes
E38	C4 clutch solenoid short circuit	Disable	Yes
E41	C3 clutch solenoid open circuit	Disable	Yes
E40	C3 clutch solenoid short circuit	Disable	Yes
E43	C2 clutch solenoid open circuit	Disable	Yes
E42	C2 clutch solenoid short circuit	Disable	Yes
E45	C1 clutch solenoid open circuit	Disable	Yes
E44	C1 clutch solenoid short circuit	Disable	Yes
C	Wheel speed too high for creeper gear	Recover	Yes
HC	Range shift to high with creeper engaged	Recover	Yes
E37	Clutch disconnect switch open circuit	Disable	Yes
E48	Clutch disconnect switch short circuit misadjusted, always closed	Disable	Yes
CP	Depress clutch pedal to enable transmission	Recover	Yes
N	Clutchless shuttle operation attempted at too high a speed and in too high a gear	Enabled	Yes
H	Shuttle performed at too high a speed	Enabled	Yes
E46	Fuse 12 blown	Enabled	No
E47	Clutch disconnect switch misadjusted high	Enabled	No
E51	Transmission temperature sensor open circuit	Enabled	No
E52	Transmission temperature sensor short circuit	Enabled	No
E24	All clutches and synchroniser not calibrated	Enabled	No
EC4	C4 clutch not calibrated	Enabled	No
EC3	C3 clutch not calibrated	Enabled	No
EC2	C2 clutch not calibrated	Enabled	No
EC1	C1 clutch not calibrated	Enabled	No
E16	Creeper solenoid open/short circuit, or attempt was made to engage creeper after prior creeper error	Enabled	No
E15	High/low range lever switches both on	Enabled	No
E14	1-4/5-8 Range lever switches both on	Enabled	No
E55	No output speed signal	Enabled	No
E56	Differential lock switch error	Enabled	No
E49	Wheel speed sensor circuit open or short circuit	Enabled	No
E26	Engine rev/min speed too high	Enabled	No
E27	Engine rev/min speed too low	Enabled	No
E59	Shuttle lever switch disagreement	Disable	No* (N)
E60	Forward synchroniser becomes disengaged	Disable	No* (N)
E61	Synchroniser Potentiometer voltage high	Disable	Yes
E62	Synchroniser Potentiometer voltage low	Disable	Yes
E63	Forward Synchroniser not engaging	Disable	No* (N)
E64	Reverse Synchroniser not engaging	Disable	No* (N)
E65	Forward synchroniser solenoid open circuit	Enabled	No

16x16 Electroshift Power Shuttle Transmission Error Codes (continued)

Error	Fault Condition	Enabled/ Disable?	Error Displayed?
E66	Reverse synchroniser solenoid open circuit	Enabled	No
E67	Forward solenoid circuit fault	Enabled	No
E68	Reverse solenoid short circuit	Enabled	No
E69	Reverse synchroniser becomes disengaged	Disabled	No* (N)
E70	Shuttle lever forward switch voltage too high	Enabled	No
E71	Shuttle lever forward switch voltage too low	Enabled	No
E72	Shuttle lever reverse switch voltage too high	Enabled	No
E73	Shuttle lever reverse switch voltage too low	Enabled	No
EC	Output speed too high while in creeper	Disabled	Yes
EHC	High range engaged while in creeper	Disabled	Yes
EC1	Clutch 1 not calibrated	Enabled	No
EC2	Clutch 2 not calibrated	Enabled	No
EC3	Clutch 3 not calibrated	Enabled	No
EC4	Clutch 4 not calibrated	Enabled	No

* Where a 'N' type error is displayed, shown in the tables above with, "(N)", the associated error will be revealed in H-Menu mode HD (display errors).

Key to Fault Finding Diagrams

Diagrams 1 to 10 - Not related to error codes

1. Tractor Does Not Drive In Any Gear
2. Incorrect Gear Shift Sequence or Gears Missing
3. Powershifts Jerky / Loss of Drive
4. Poor Clutch Feathering
5. Clutch Potentiometer Calibration Check
6 Holding in Gear / Jumping Out of Gear / Clashing
7. Creeper Does Not Disengage
8. Clutches Squeal / Whine During Inching
9. Transmission is Noisy in Operation
10. Transmission 'Clunks' During Inching

Diagrams 11 onwards, error code related:

11. Error Code E11
12. Error Code E12
13. Error Codes E53 and E54
14. Error Codes E37, E47 and E48
15. Error Codes E38,E39 / E40,E41 / E42,E43 / E44,E45
16. Error Codes C and E16 - Creeper Does Not Engage in Low Range
17. Error Code HC
18. Error Code CP
19. Error Code E46
20. Error Codes E51 and E52
21. Error Codes E24, EC4, EC3, EC2 and EC1
22. Error Code E15
23. Error Code E14
24. Error Code E55
25. Error Code E56
26. Error Code E49
27. Error Code E26
28. Error Code E27
29. Error Code E59
30. Error Code E60 and E69
31. Error Code E61 and E62
32. Error Code E63 and E64
33. Error Code E65 and E66
34. Error Code E67 and E68
35. Error Code E70 and E71
36. Error Code E72 and E73
37. Error Code Symbol 'N'

DIAGRAM 1 - Tractor does not drive (in any gear)

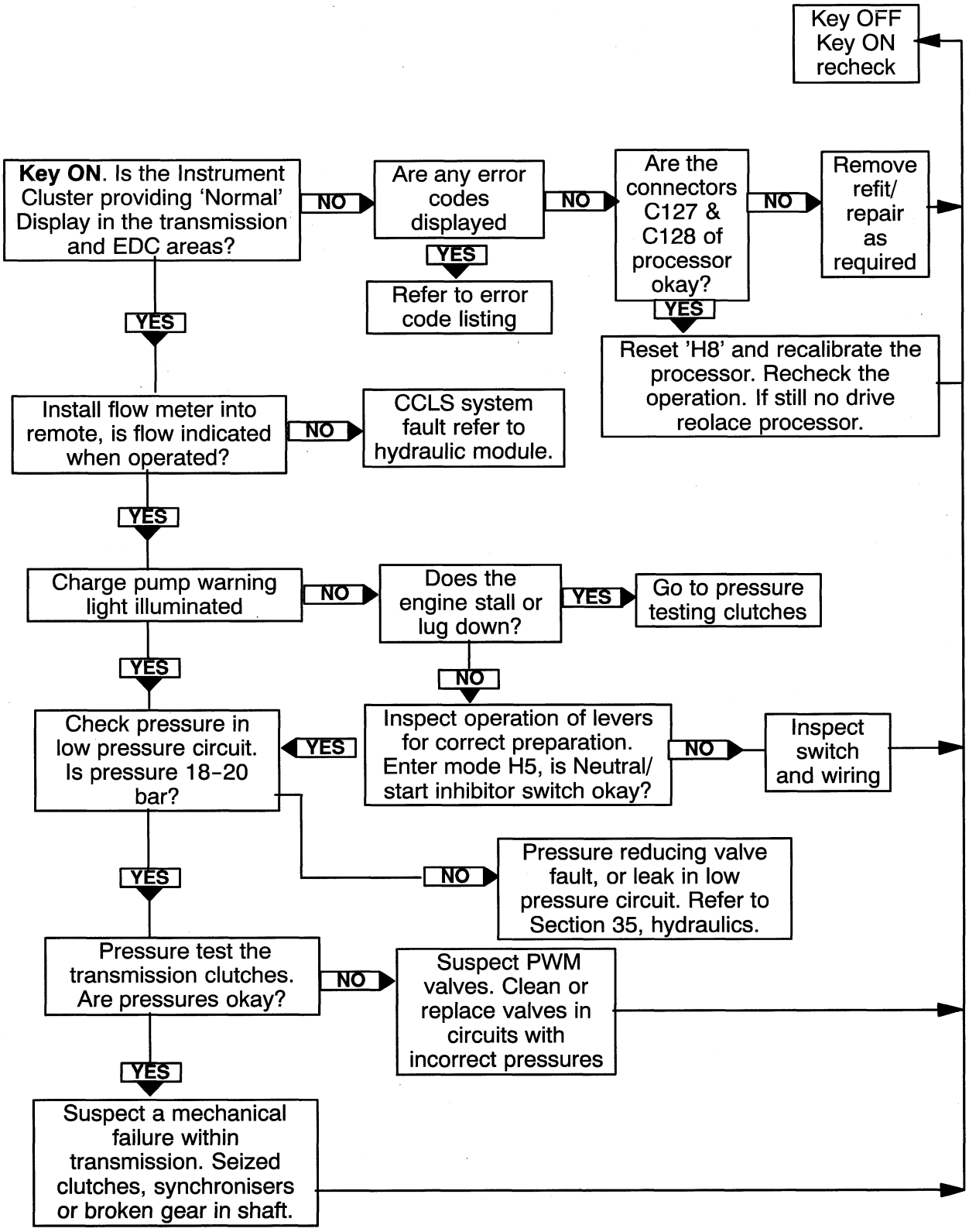

DIAGRAM 2 - Tractor drives in ranges but has following fault:

- Powershift function operates but the shift sequence is incorrect or gears missing

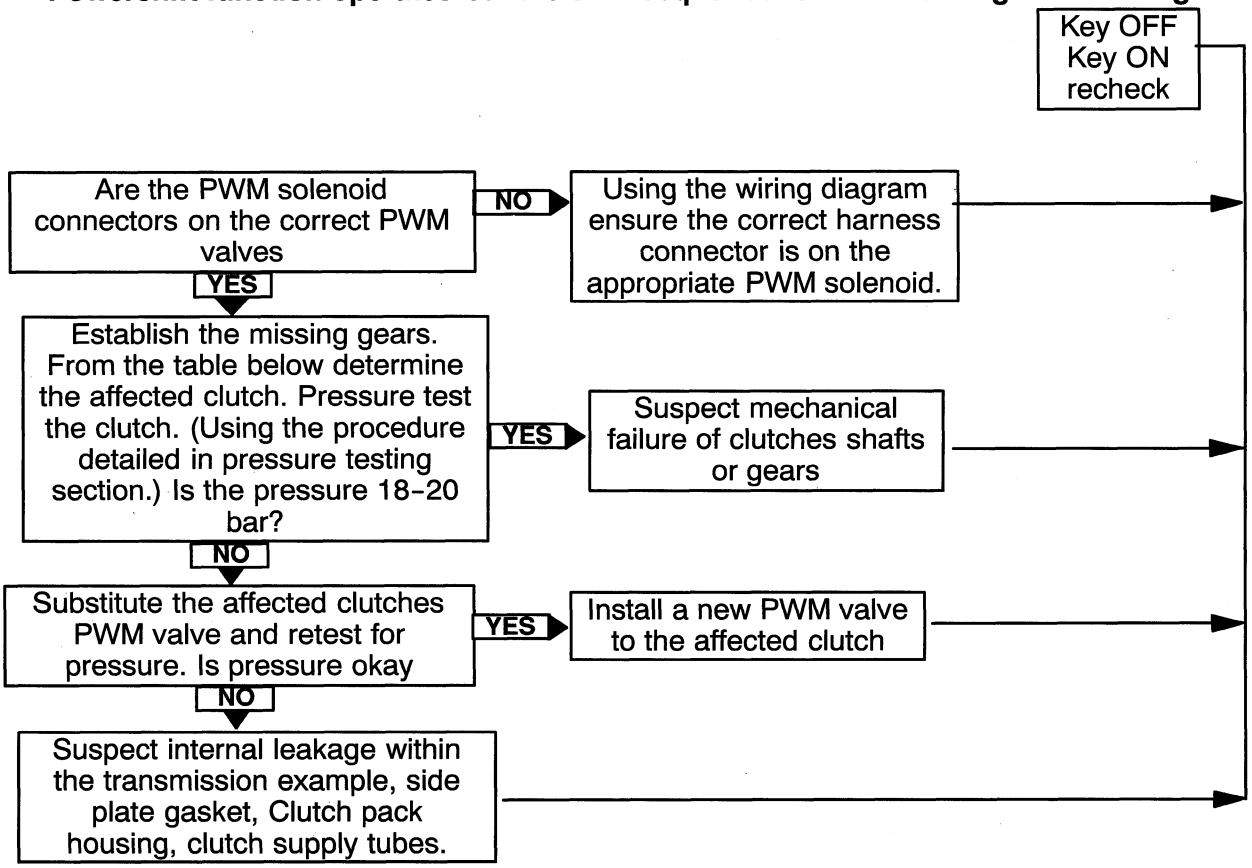

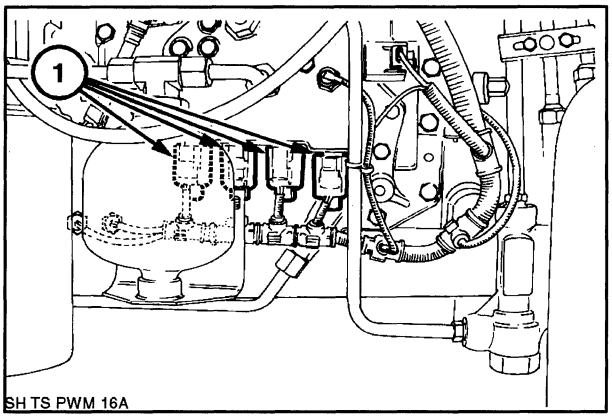

	C1	C2	C3	C4	
1-5		○		○	9-13
2-6		○	○		10-14
3-7	○			○	11-15
4-8	○		○		12-16

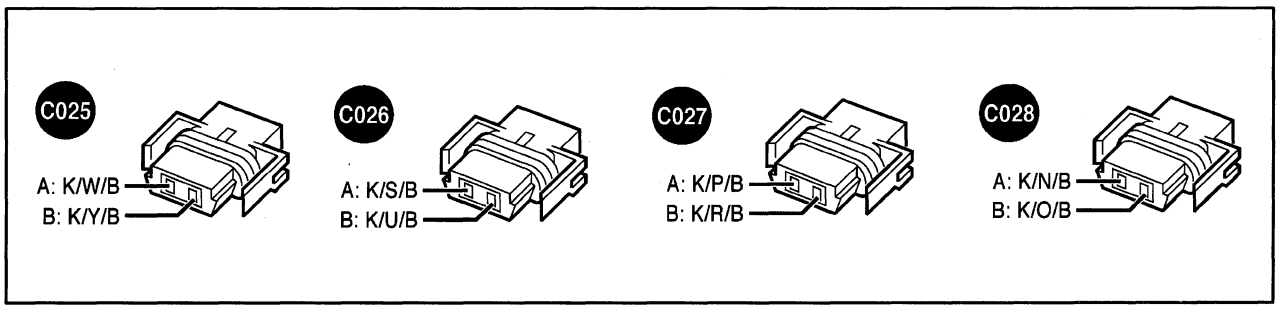

DIAGRAM 3 - The powershifts are not smooth or the tractor loses drive between powershifts (in work tractor stops or could be jerky)

Key OFF
Key ON
recheck

Perform complete transmission calibration.
1) spring calibration
2) fill time adjustment
is transmission still performing poorly?

NO → Tractor okay

YES

NO ← Is feathering performance poor?

YES

Suspect PWM valves 3 or 4. Clean or replace and repeat spring calibration. Is powershift performance poor?

NO →

YES

NO ← Are only double swap shifts poor? (ie, 2 to 3 or 6 to 7 gear changes. 3 to 2 or 7 to 6 gear changes)

YES

Suspect PWM valves 1 or 2. Clean or replace. Repeat spring calibration and fill time adjustment. Is powershift performance still poor?

YES

Remove and test accumulator (see testing section) Is accumulator okay?

NO → Repair/replace accumulator perform fill time adjustment

YES

Suspect damaged clutch plates. Inspect and replace as required. (See overhaul) recalibrate after assembly

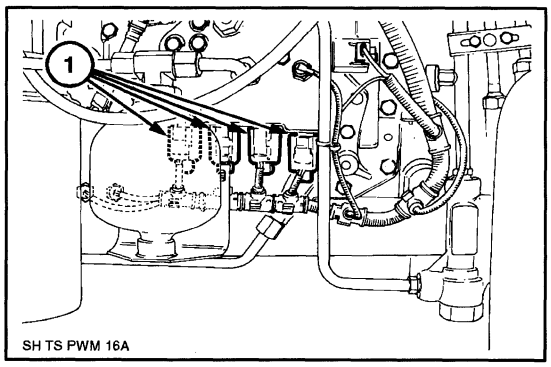

DIAGRAM 4 - The tractor drives in all gears but has the following fault
Poor clutch pedal feathering/inching performance.

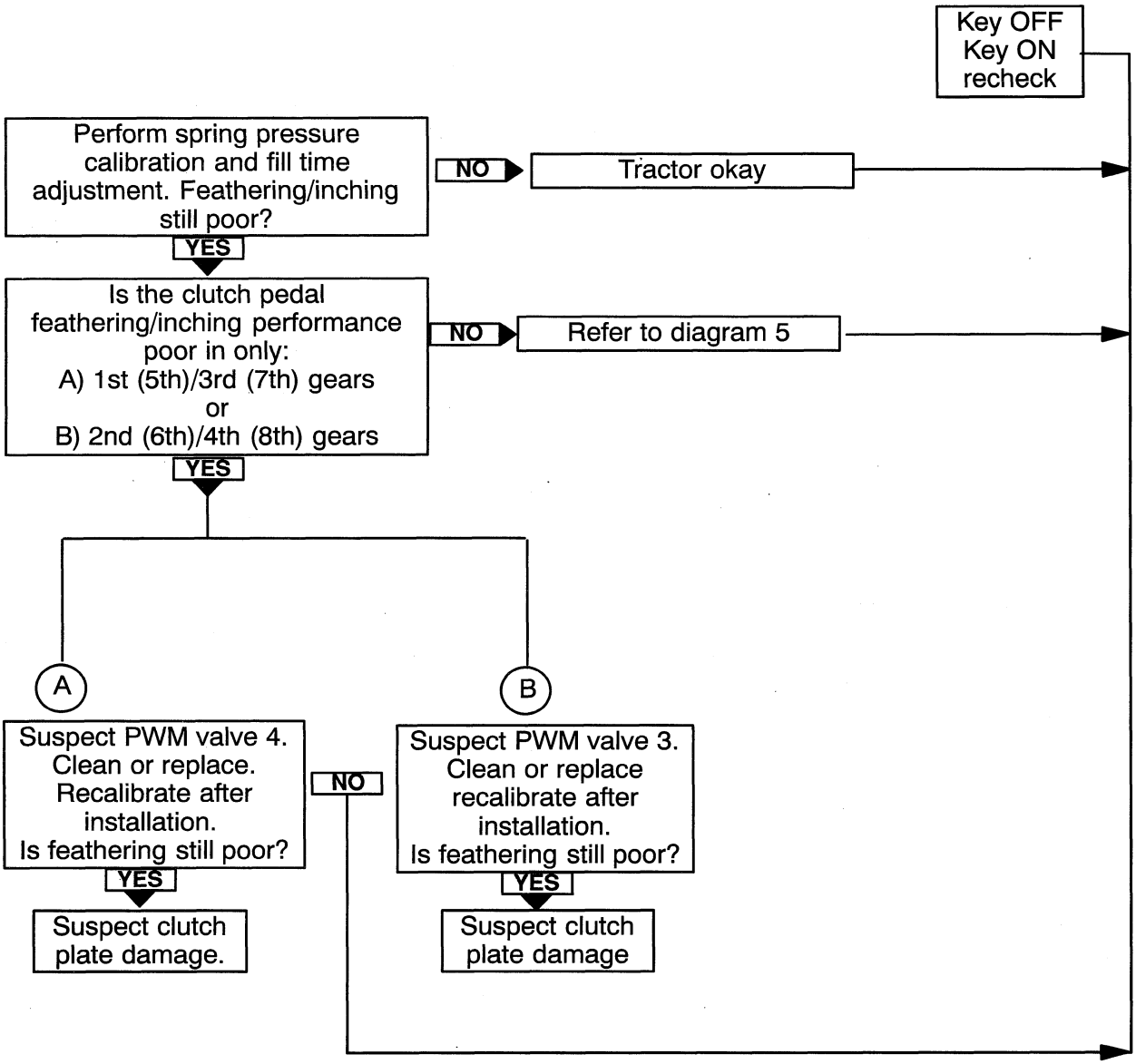

DIAGRAM 5 - Clutch pedal potentiometer calibration check

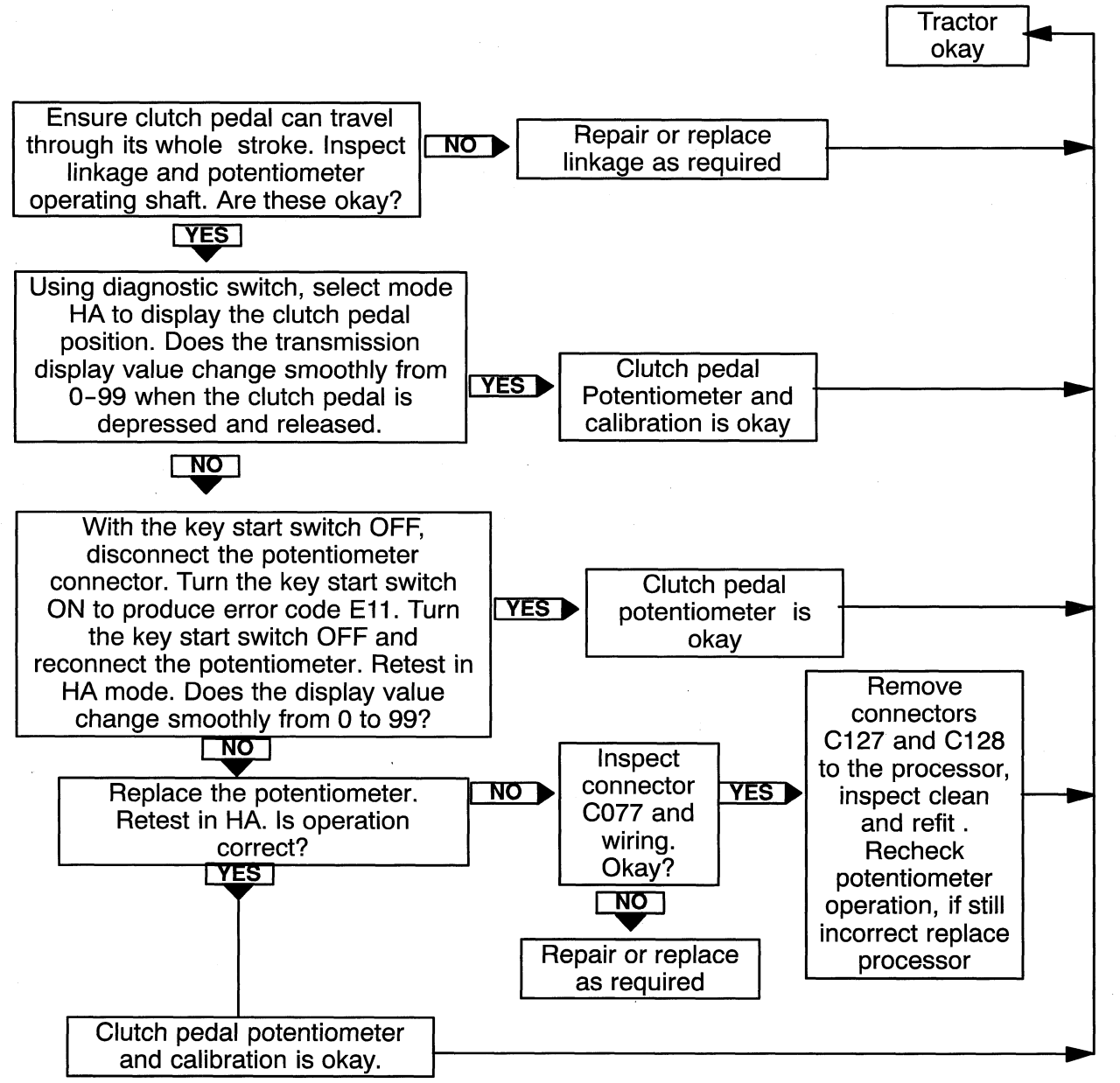

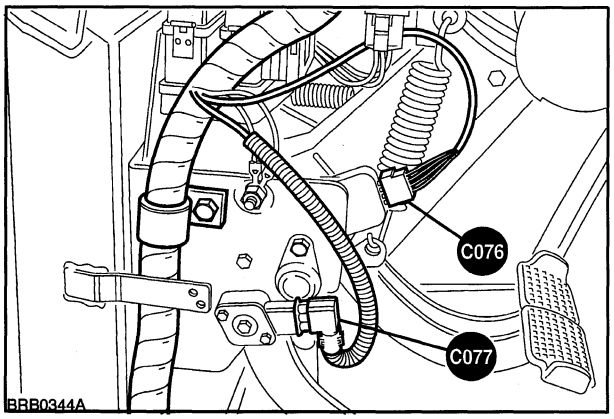

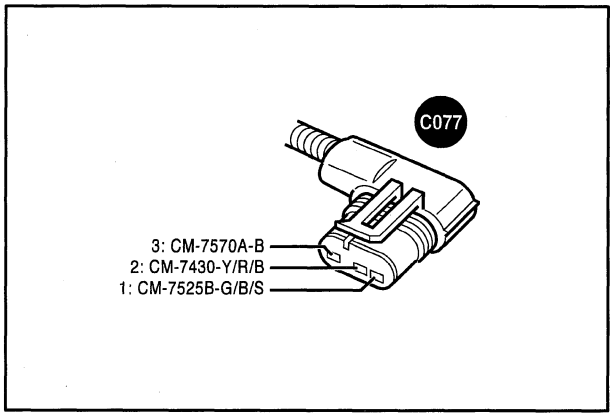

DIAGRAM 6: The tractor drives in all gears and ranges but has the following fault:

Transmission jumps out of gear, holds in gear or gears clash when shifting

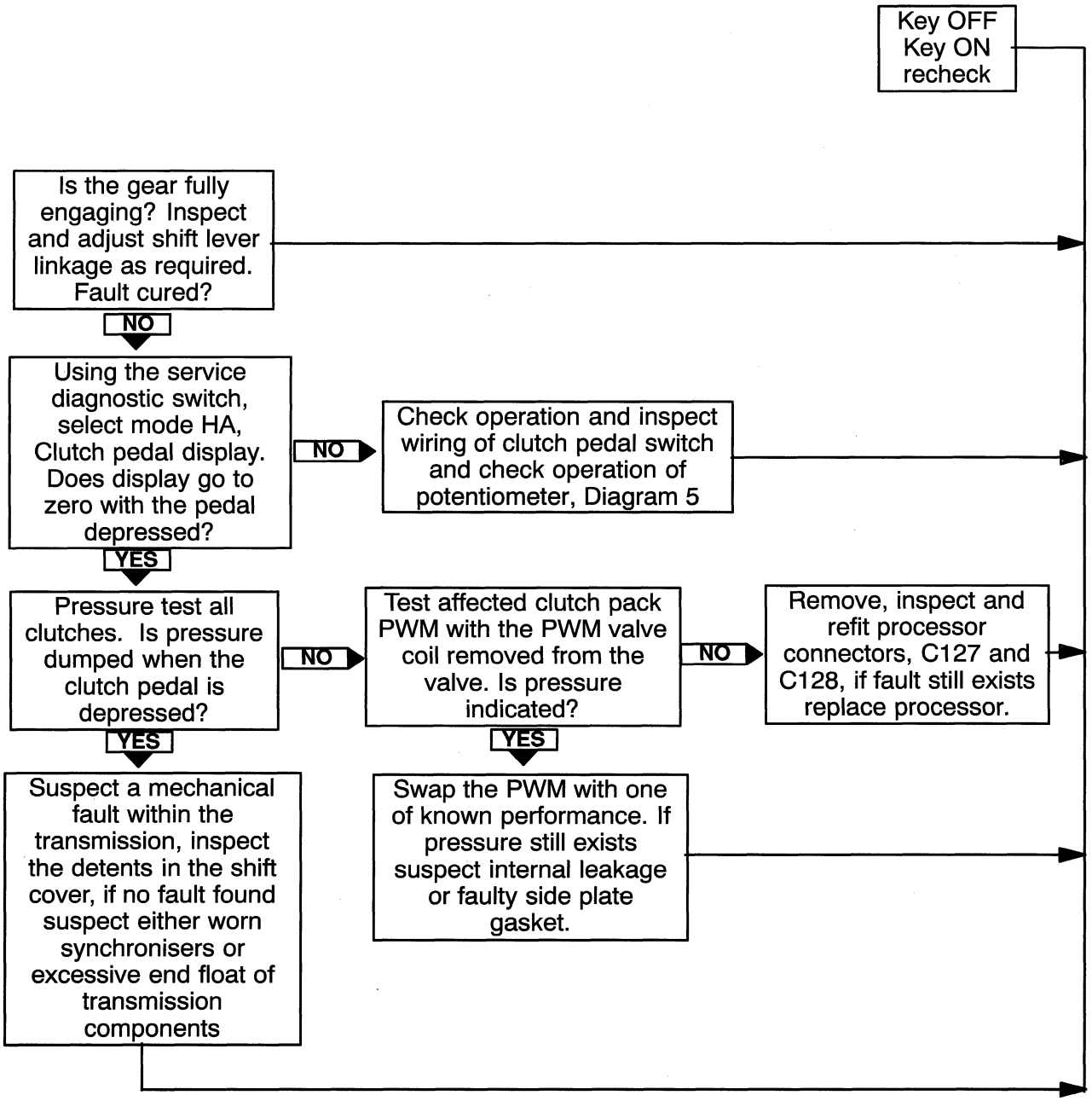

DIAGRAM 7 - The creeper does not disengage.

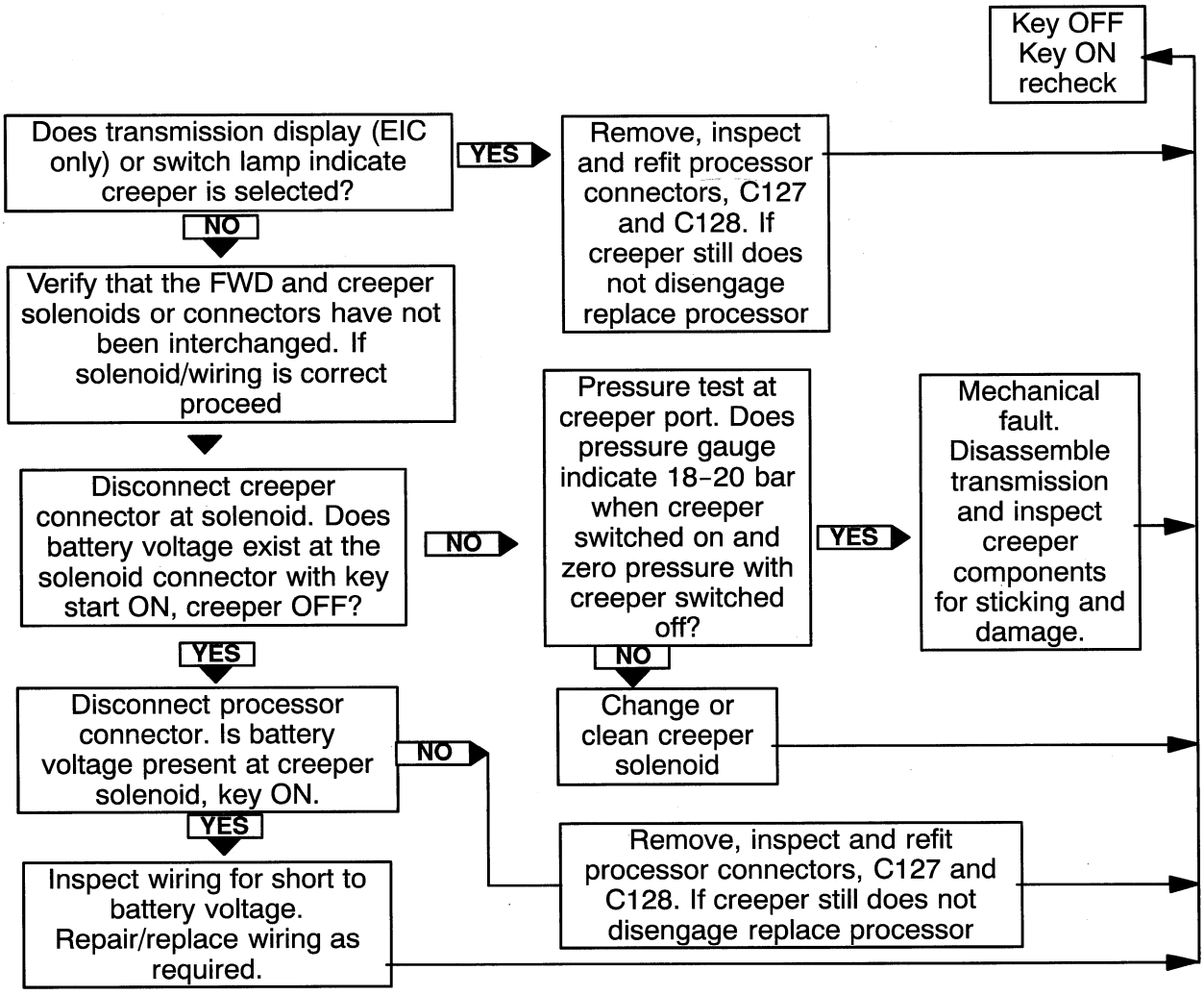

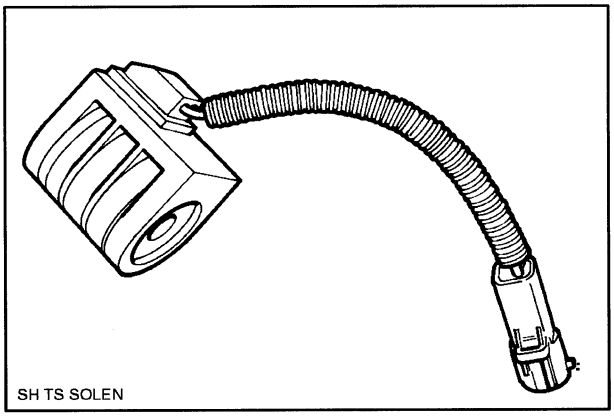

FLOW DIAGRAM 8: The tractor drives in all gears and ranges but has the following fault:

Clutches squeal/whine during inching

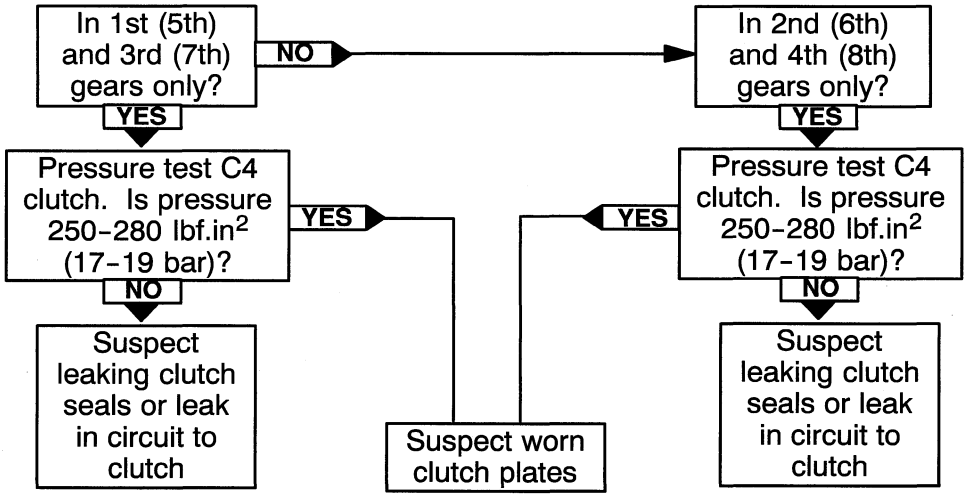

DIAGRAM 9: The tractor drives in all gears and in all ranges but has the following fault:

Transmission is noisy in operation

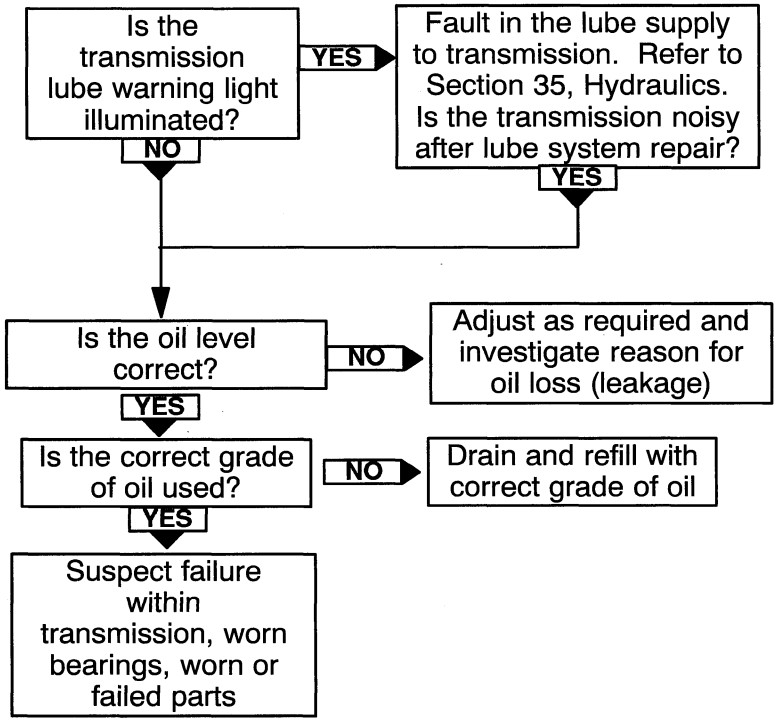

DIAGRAM 10: The tractor drives in all gears and ranges but has the following fault:

Transmission clunks during inching

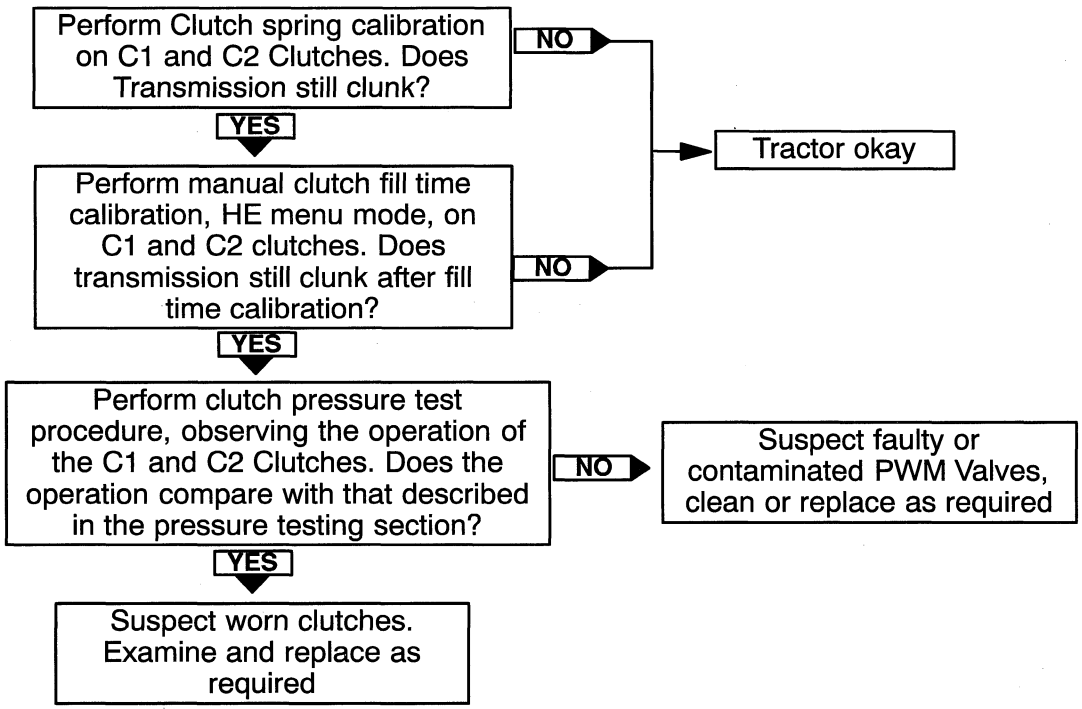

DIAGRAM 11 - Error Code E11

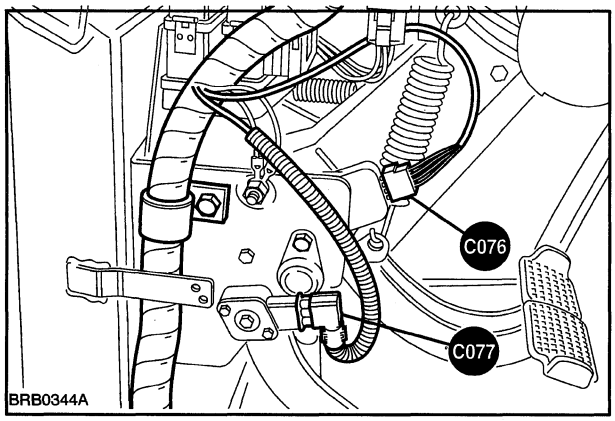

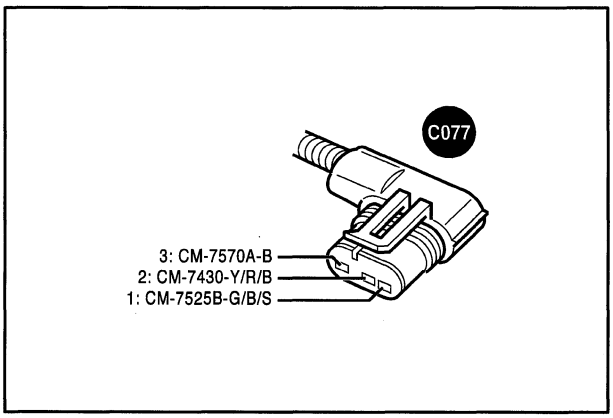

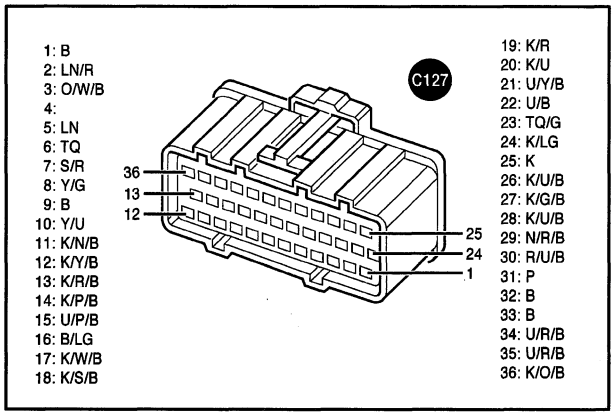

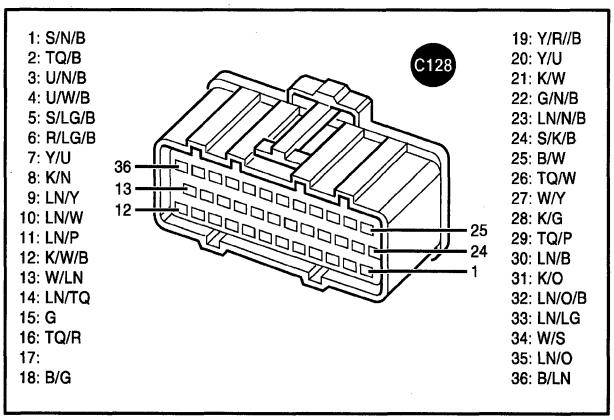

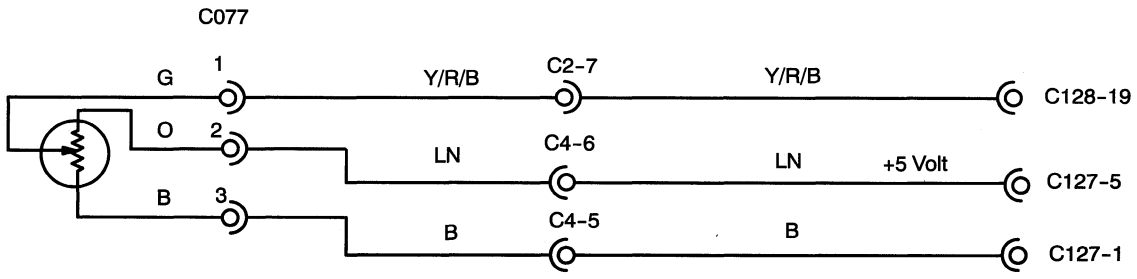

DIAGRAM 11 - Error Code E11 - Clutch potentiometer voltage below valid range

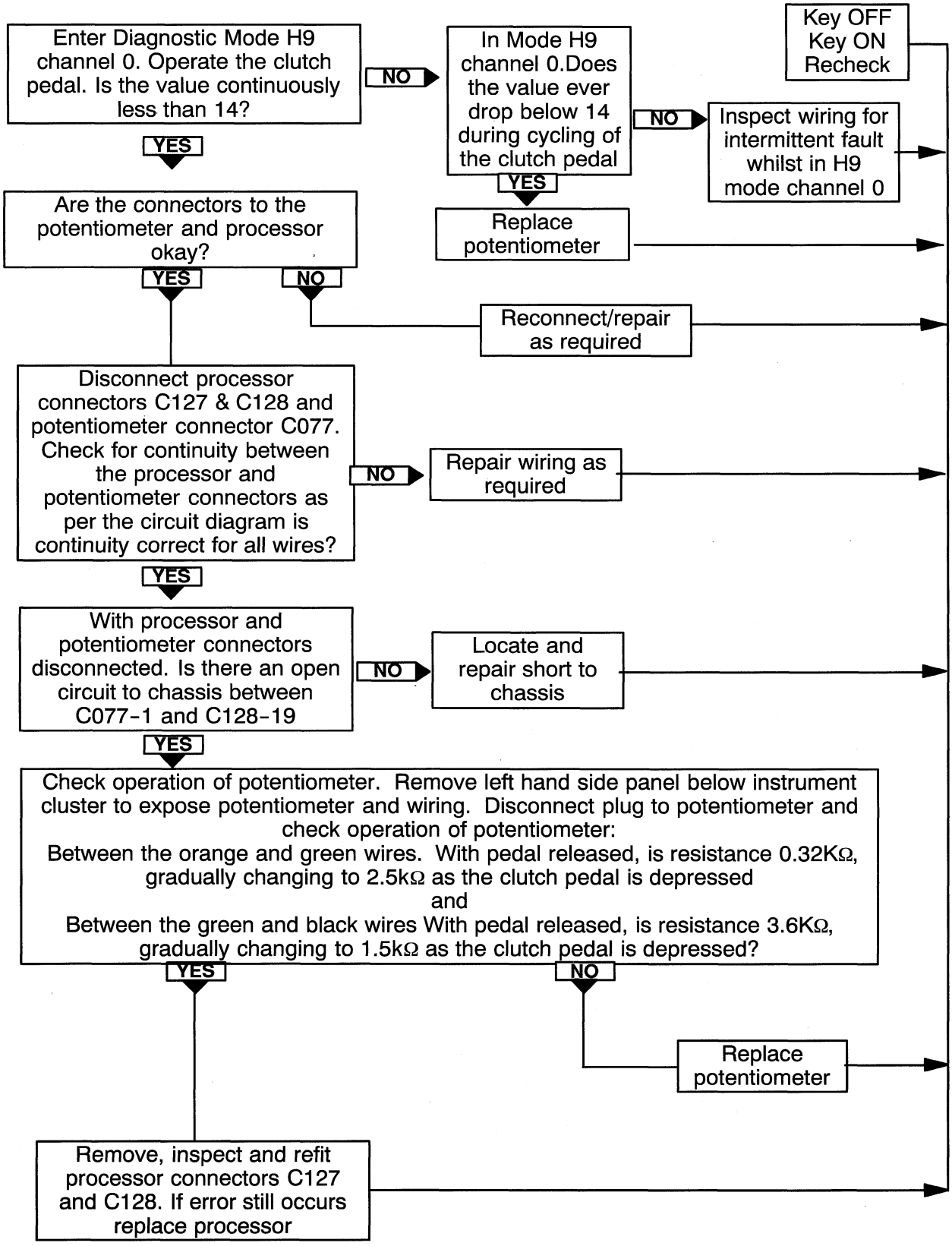

DIAGRAM 12 - Error Code E12

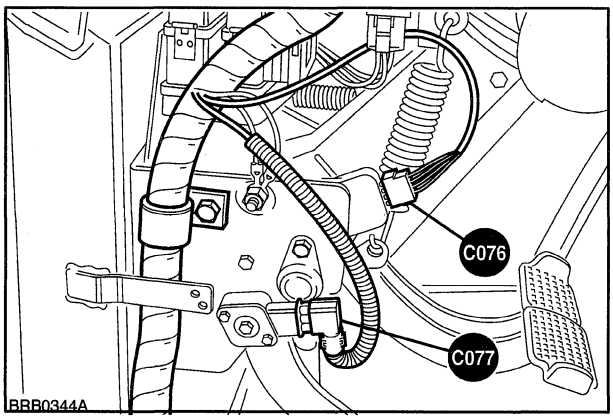

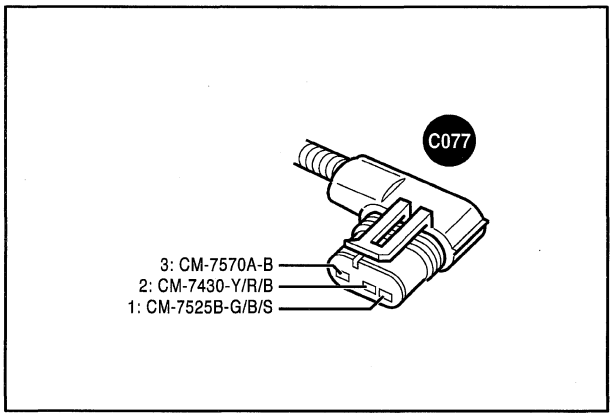

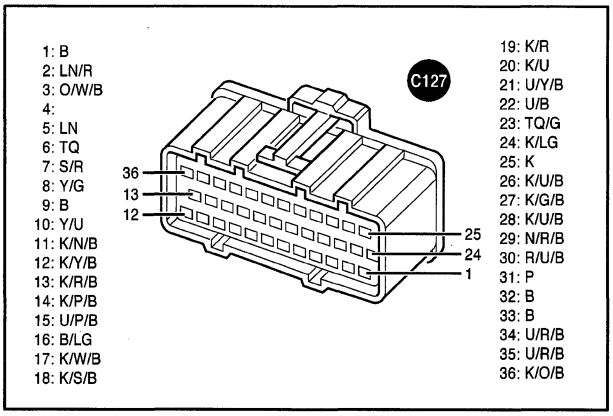

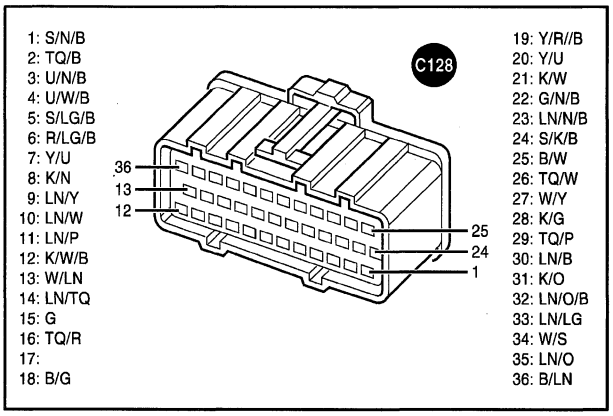

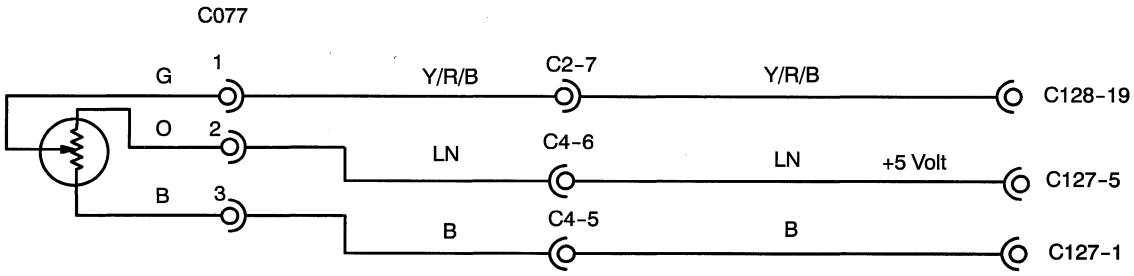

DIAGRAM 12 - Error Code E12 - Clutch potentiometer voltage above valid range

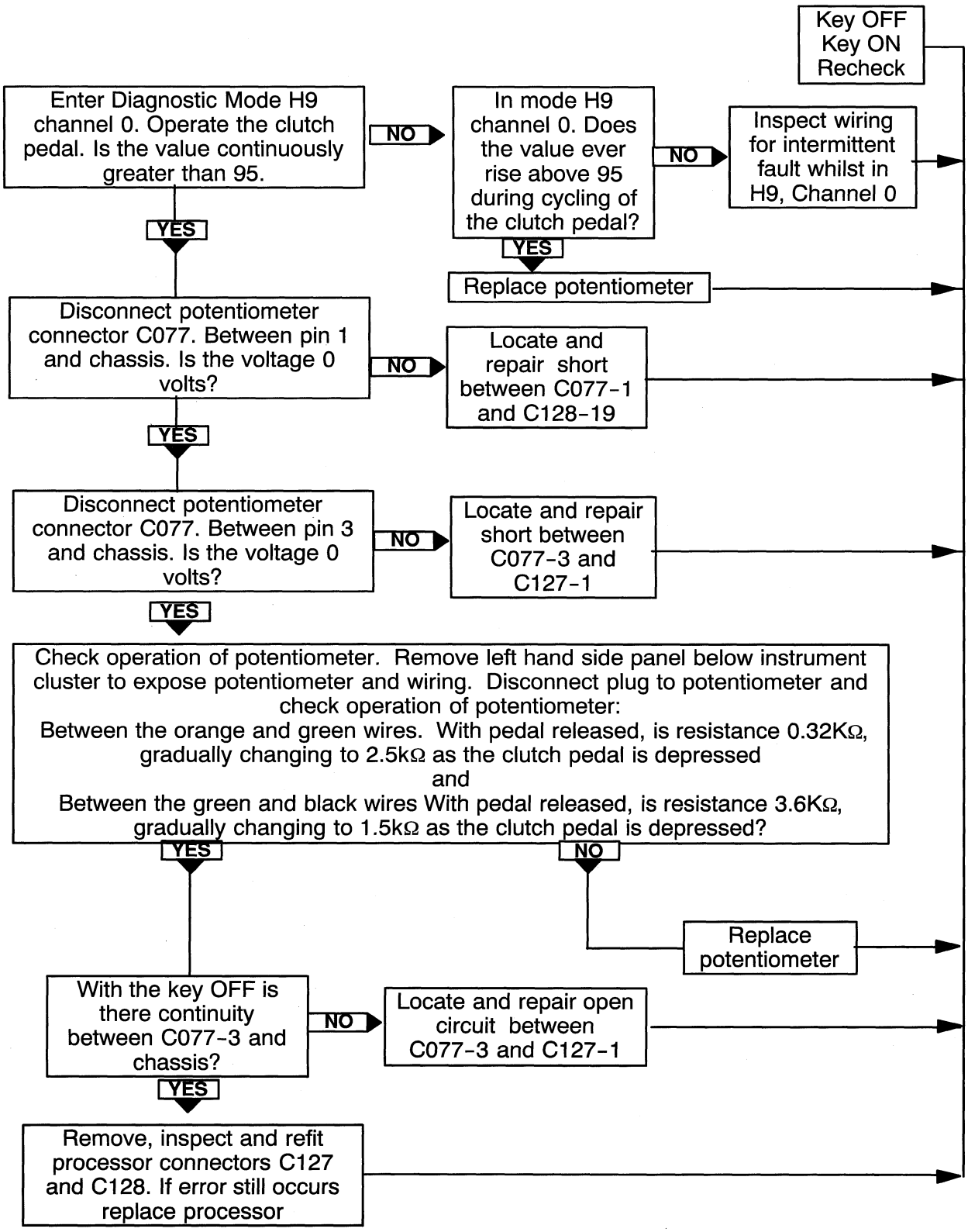

DIAGRAM 13 - Error code E53 - 5 volt reference failed, shorted to battery voltage
Error code E54 - 5 volt reference failed, shorted to earth.

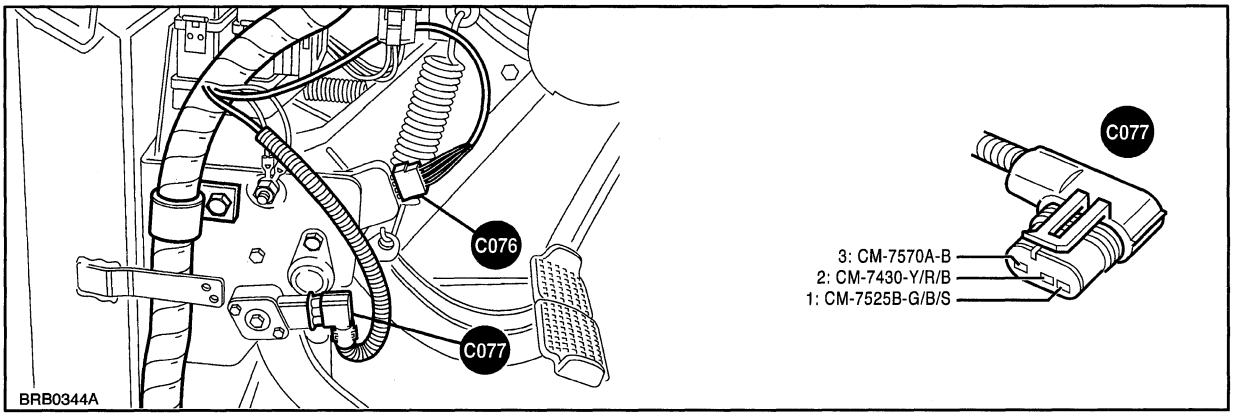

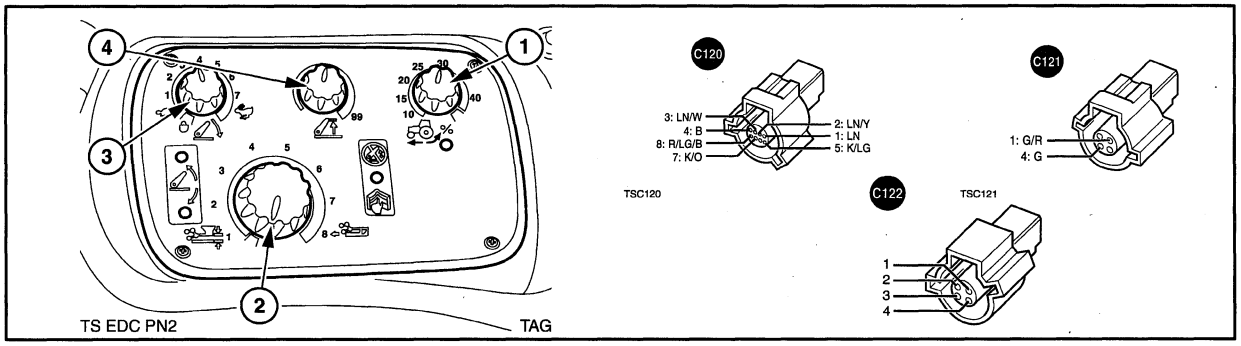

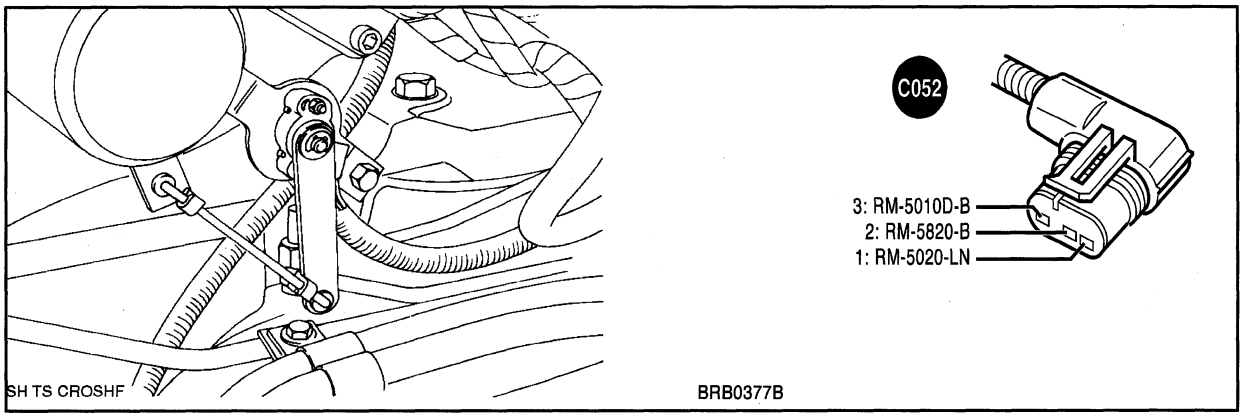

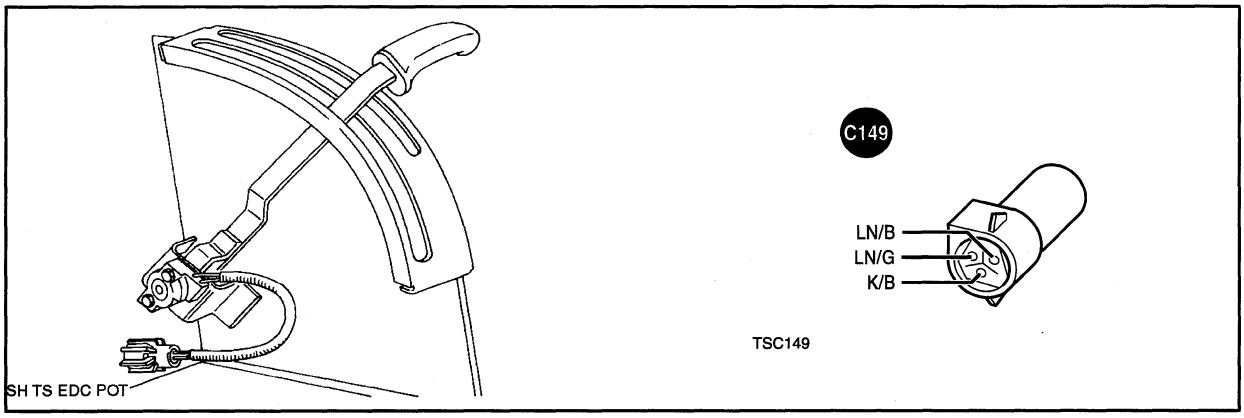

DIAGRAM 13 - Error code E53 - 5 volt reference failed, shorted to battery voltage
Error code E54 - 5 volt reference failed, shorted to earth.

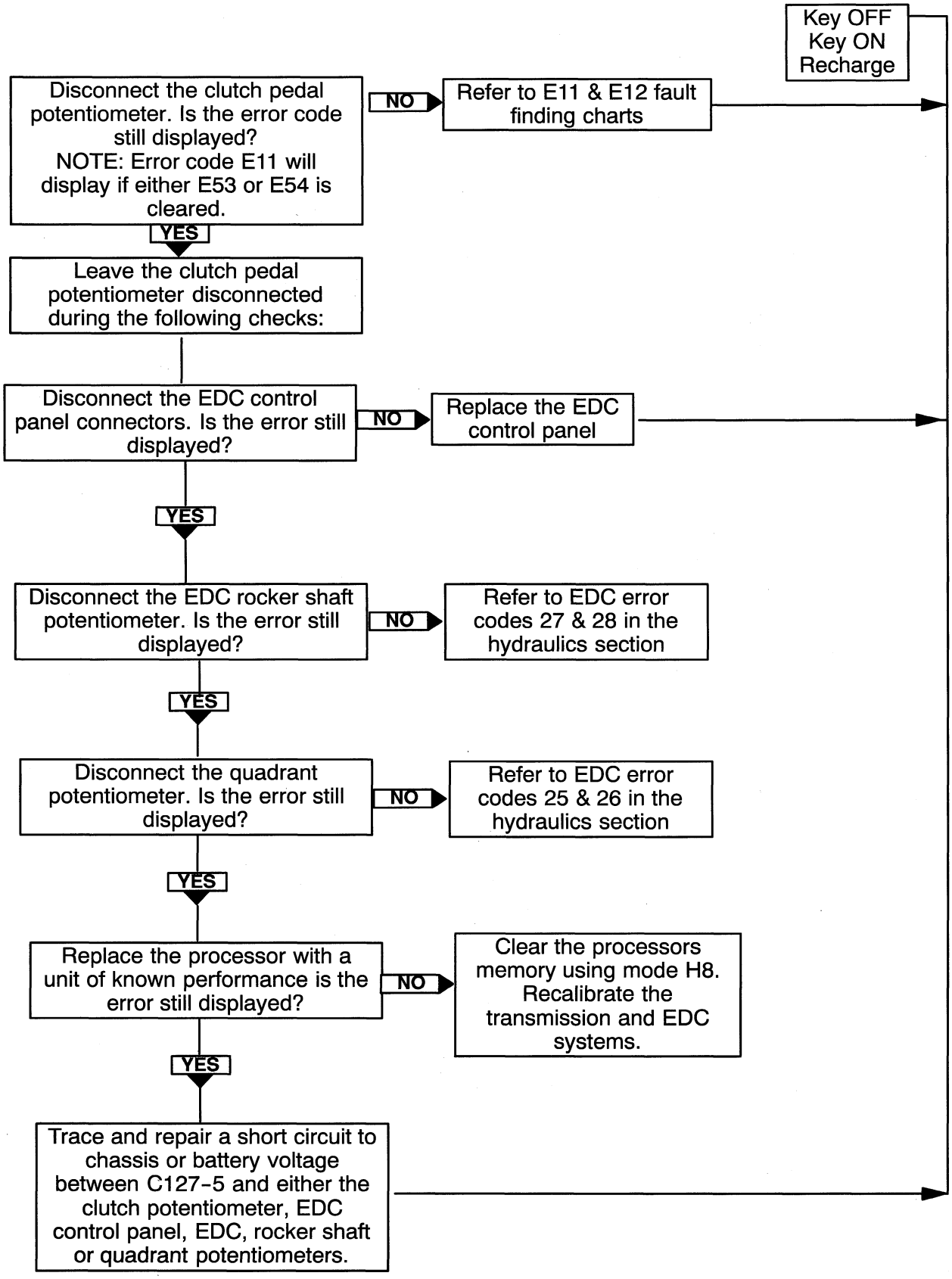

DIAGRAM 14 - Error Codes E37, E48 and E47

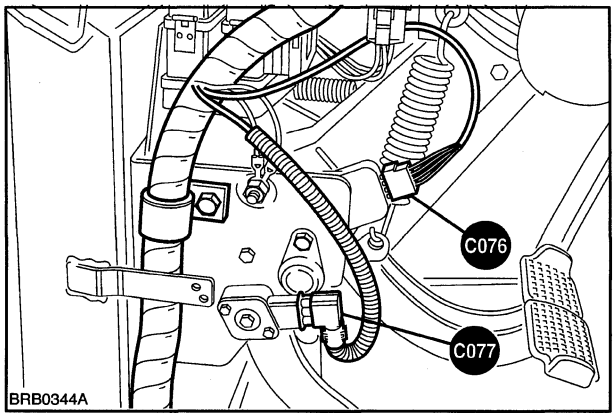

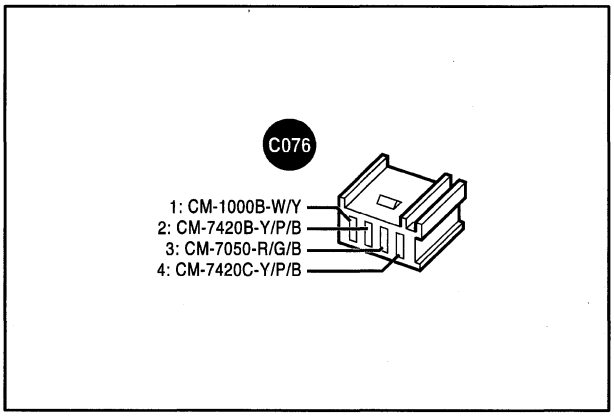

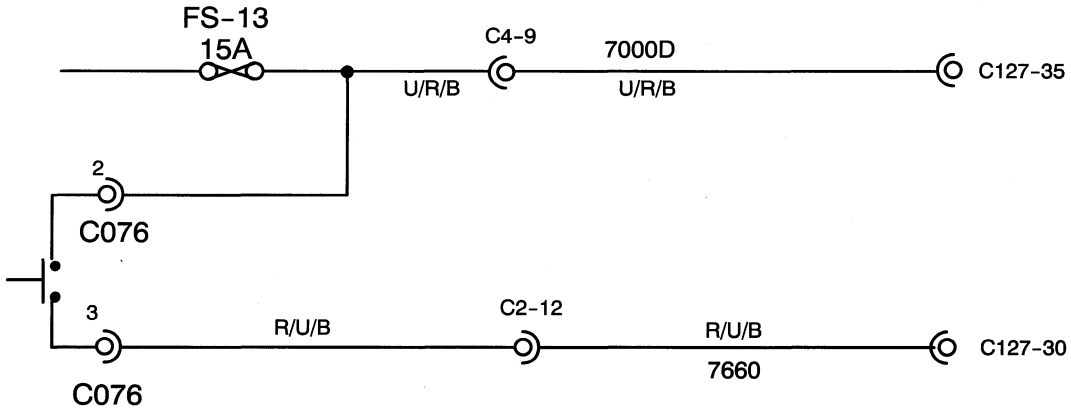

DIAGRAM 14 -

Error Code E37 displayed - Clutch disconnect switch open circuit

Check switch adjustment and switch operation, if okay trace break in wiring (open circuit).

Error Code E48 displayed - Clutch disconnect switch short circuit

Check switch adjustment and switch operation, if okay trace short circuit in wiring.

Error Code E47 displayed - Clutch disconnect maladjusted high

Check switch adjustment and operation of switch.

NOTE: *With each of these error codes also check that the clutch potentiometer operates over the full range using Service mode HA. If the range is not 0-99 then refer to 'Clutch Potentiometer calibration' Diagram 5.*

DIAGRAM 15 - PWM Solenoids

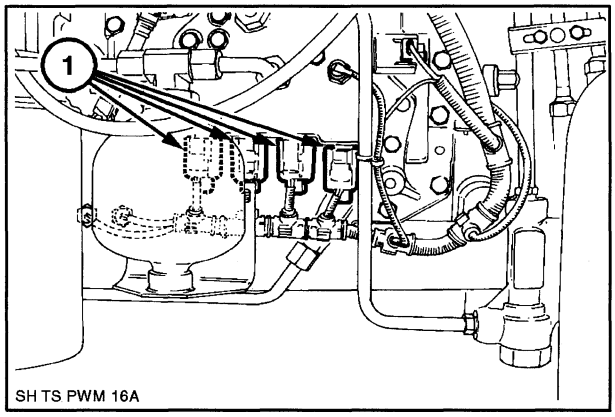

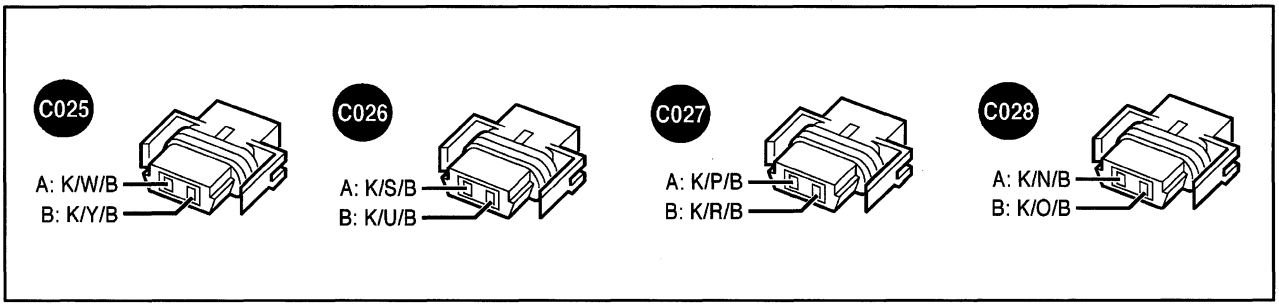

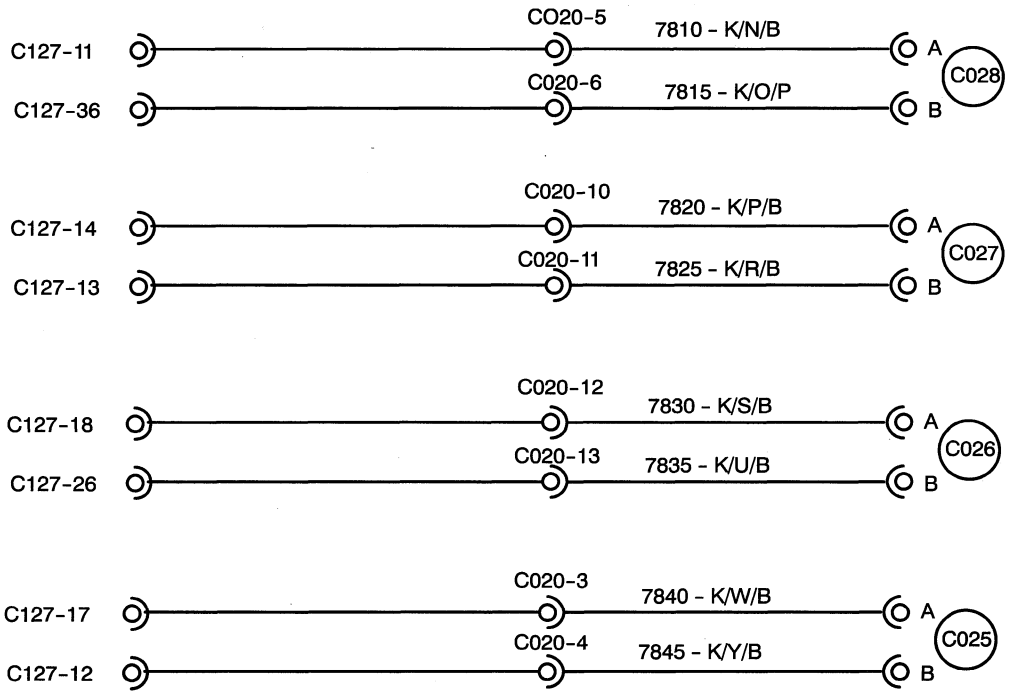

DIAGRAM 15 - PWM Solenoids

Error Code E38 displayed - C4 (C25) PWM solenoid wiring short circuit
Error Code E39 displayed - C4 (C25) PWM solenoid wiring open circuit
Error Code E40 displayed - C3 (C26) PWM solenoid wiring short circuit
Error Code E41 displayed - C3 (C26) PWM solenoid wiring open circuit
Error Code E42 displayed - C2 (C27) PWM solenoid wiring short circuit
Error Code E43 displayed - C2 (C27) PWM solenoid wiring open circuit
Error Code E44 displayed - C1 (C28) PWM solenoid wiring short circuit
Error Code E45 displayed - C1 (C28) PWM solenoid wiring open circuit

Error codes E38 through to E45 indicate either a short or open circuit in the wiring of one of the PWM solenoids. Using a suitable multi-meter check the wiring from the PWM solenoid back to the processor module. Locate the short/open circuit and repair or replace wiring as necessary.

If wiring is okay, disconnect the PWM solenoid from the harness and check that the resistance of the PWM coil is approximately 10 ohms at 20°C. If not, replace the PWM solenoid.

If wiring and PWM solenoids are okay, replace the microprocessor with one of known performance.

DIAGRAM 16 - The creeper does not engage in low range - possibly error code E16 or Symbol 'C' displayed

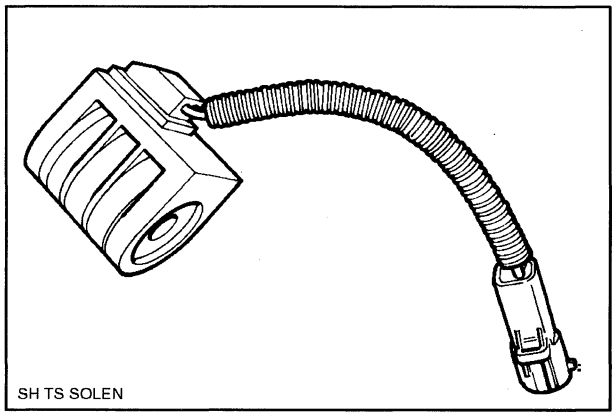

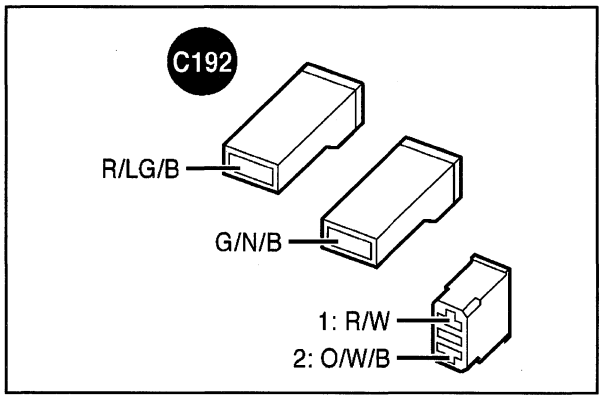

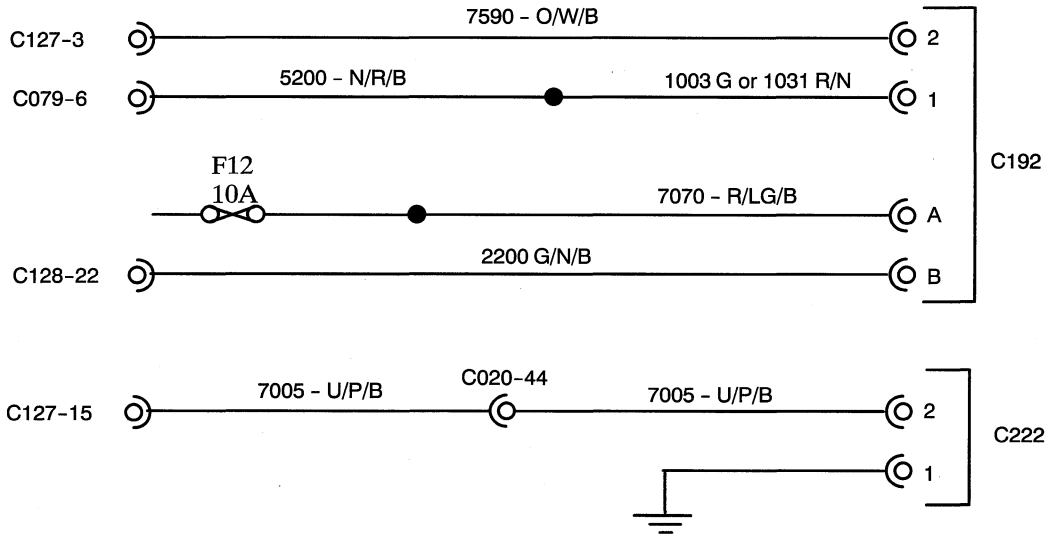

DIAGRAM 16 - The creeper does not engage in low range - possibly error code E16 or Symbol 'C' displayed

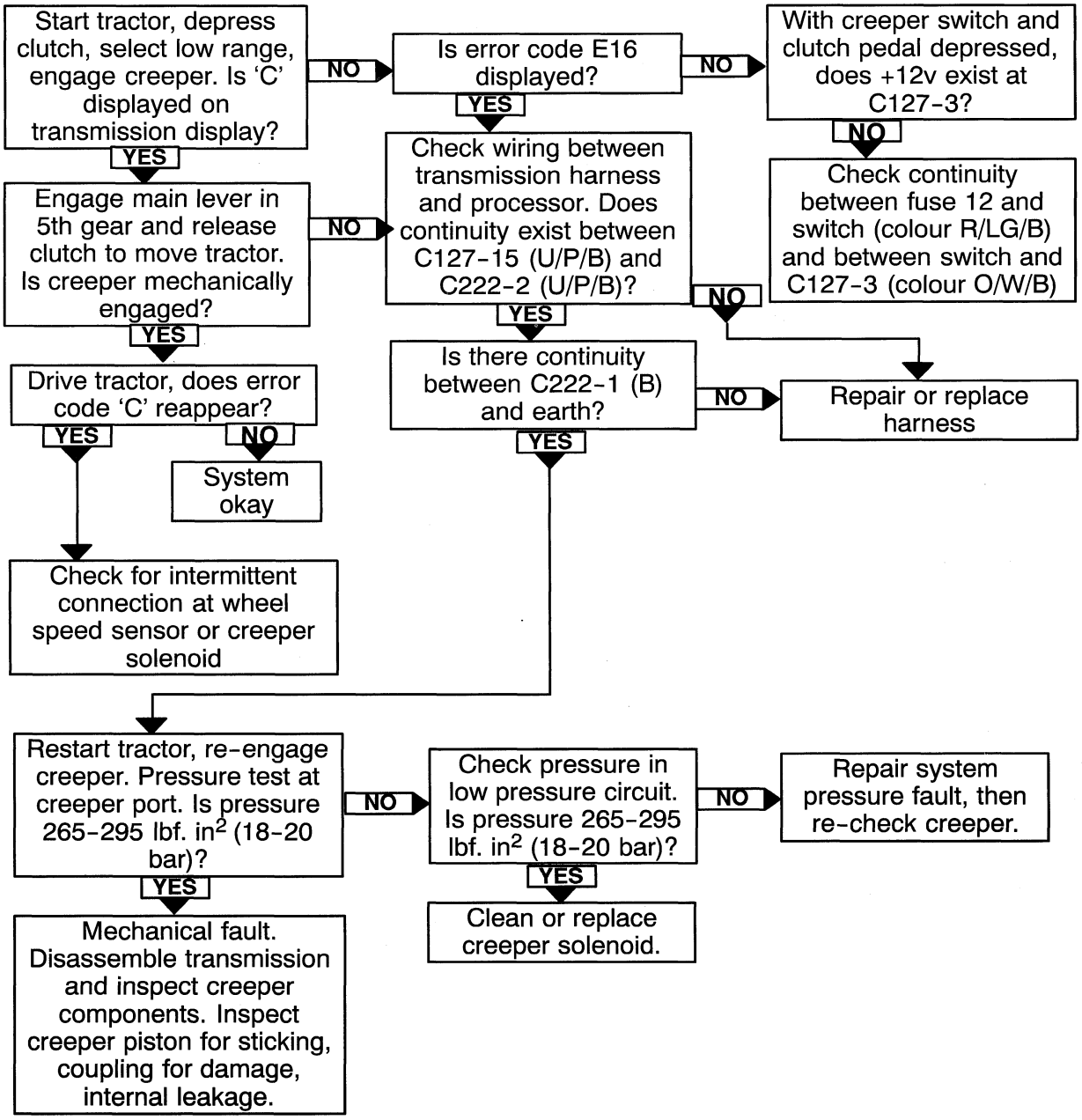

DIAGRAM 17 - Code HC displayed

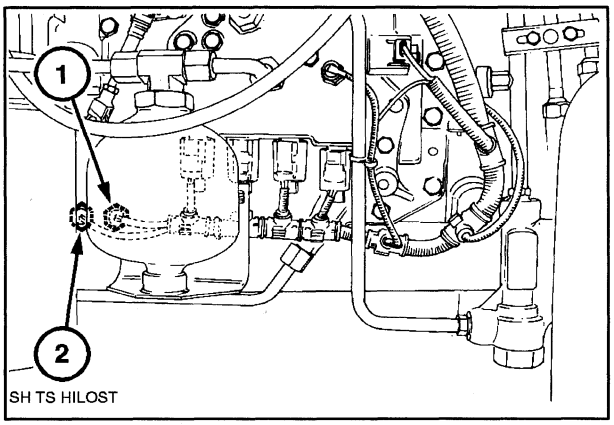

1. High range switch
2. Low range switch

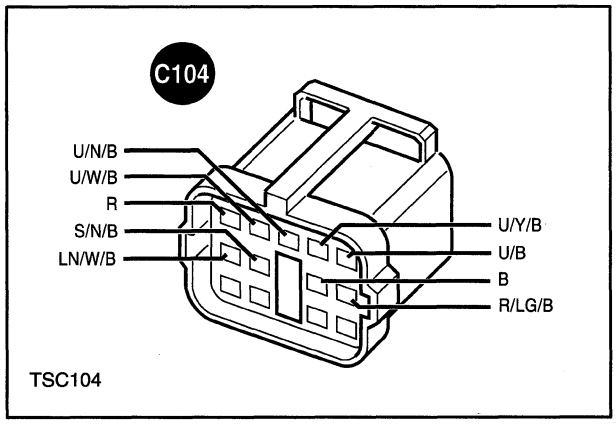

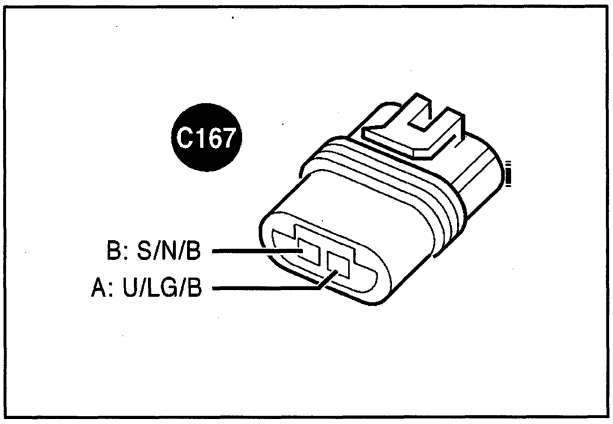

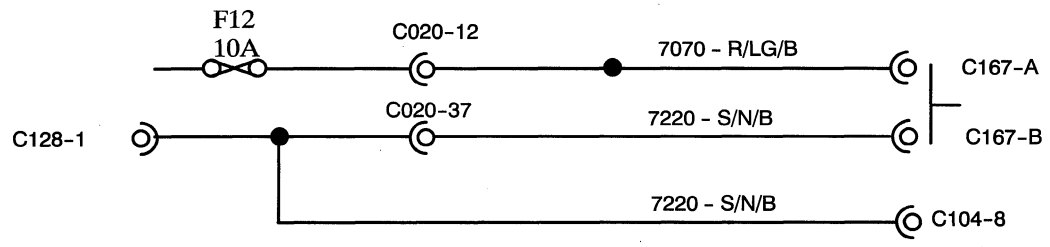

DIAGRAM 17 - Code HC displayed

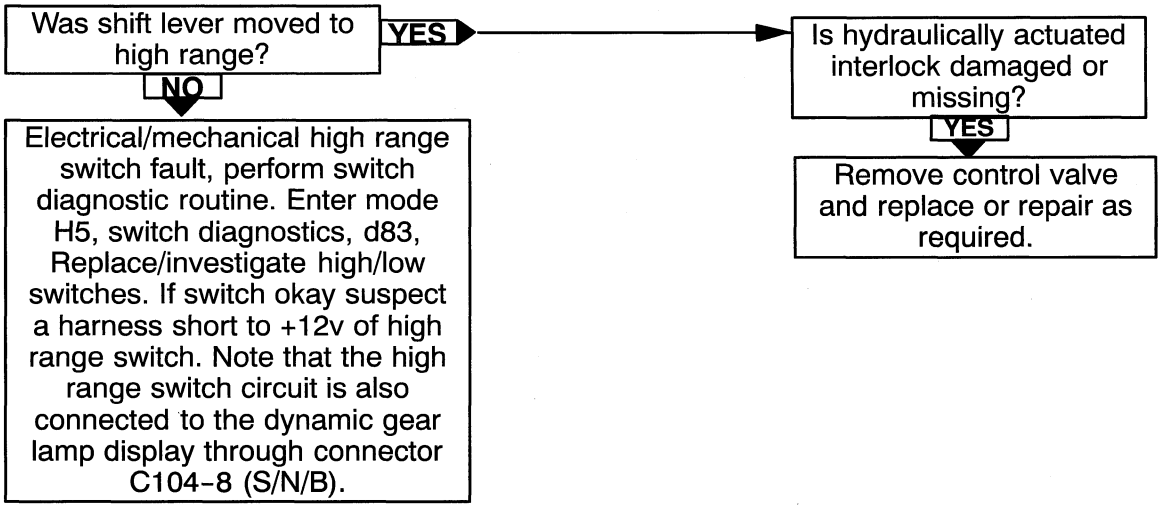

DIAGRAM 18 - Error code CP displayed - depress clutch pedal to re-enable transmission

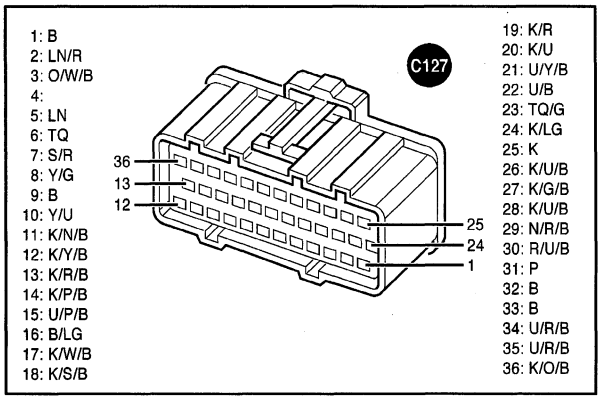

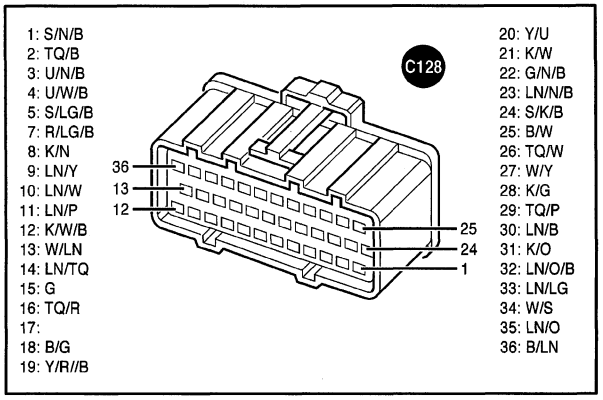

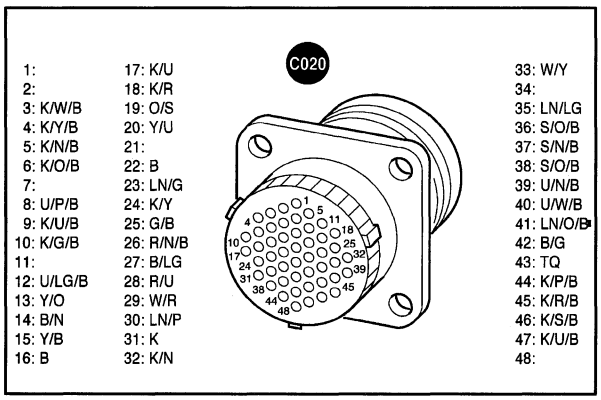

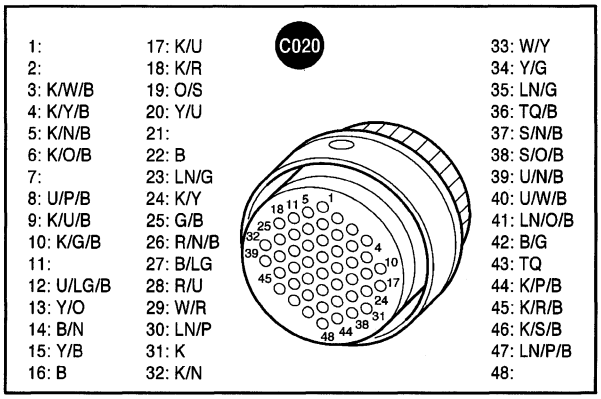

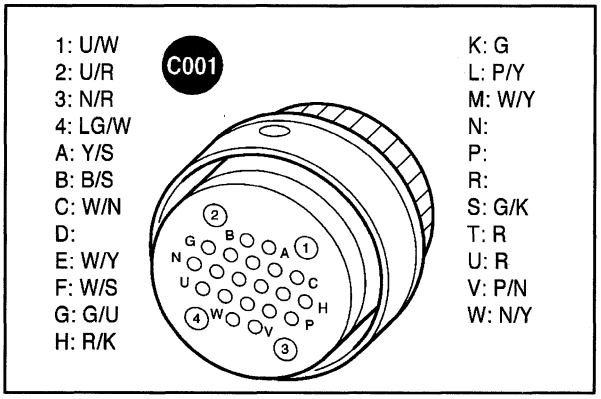

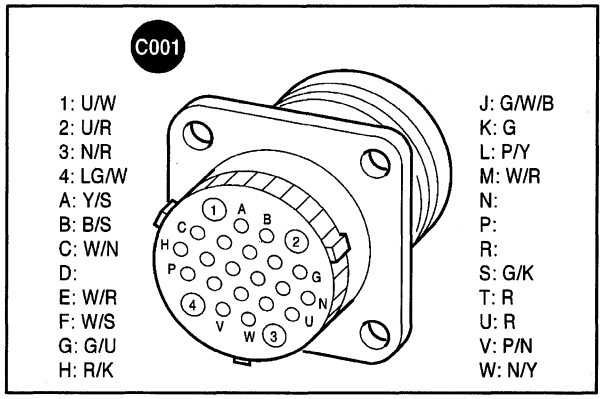

DIAGRAM 18 - Error code CP displayed - depress clutch pedal to re-enable transmission

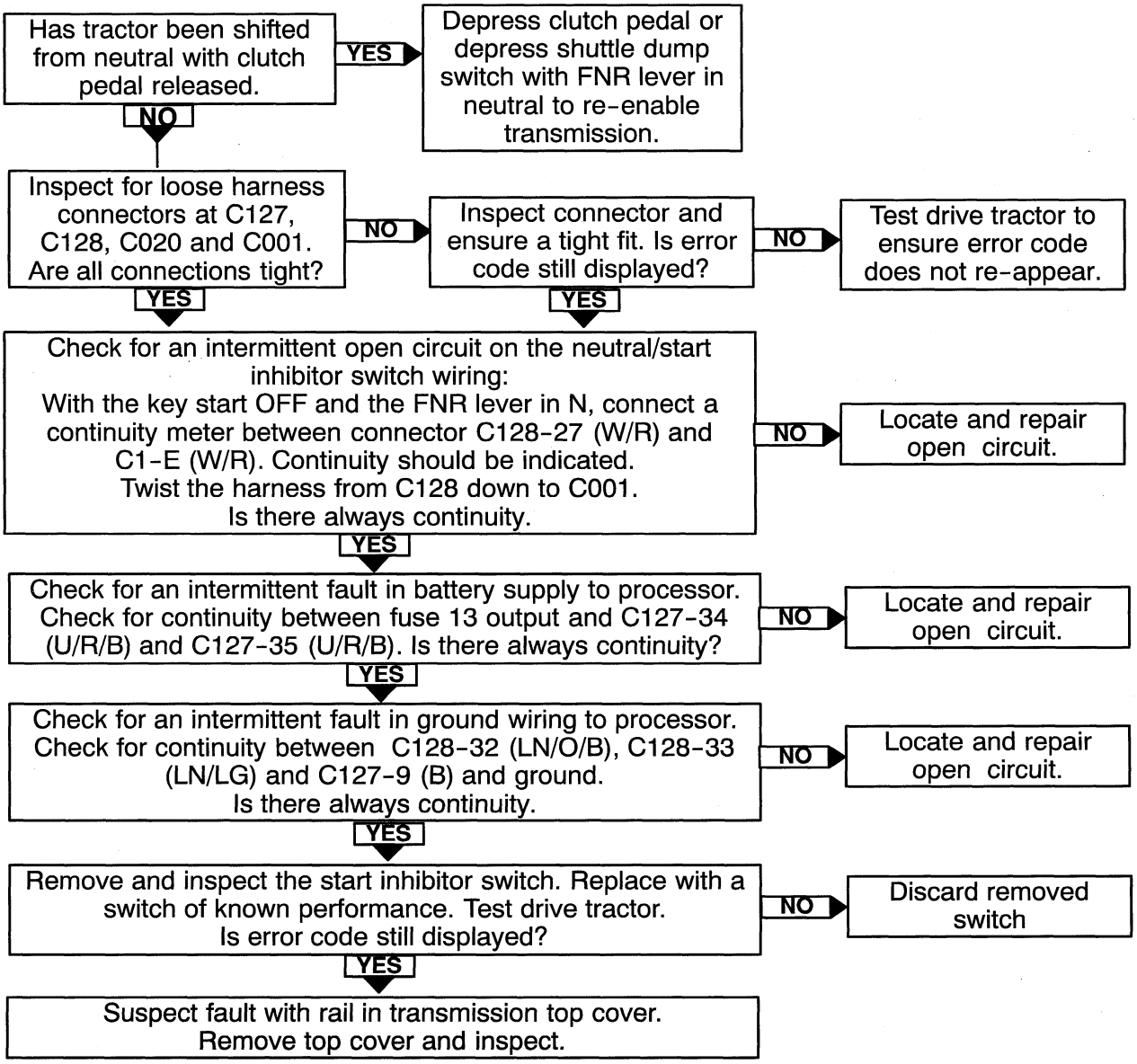

DIAGRAM 19 - Error code E46 displayed - Fuse 12 blown.

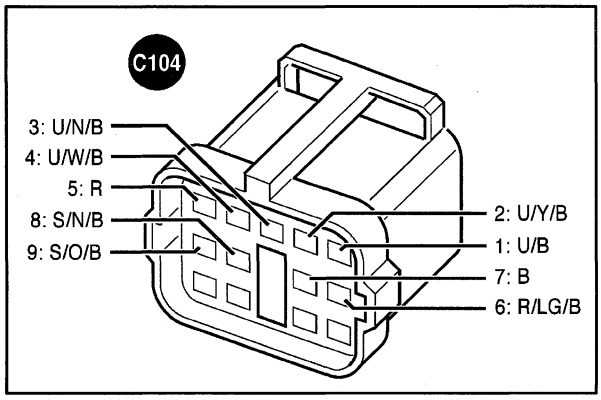

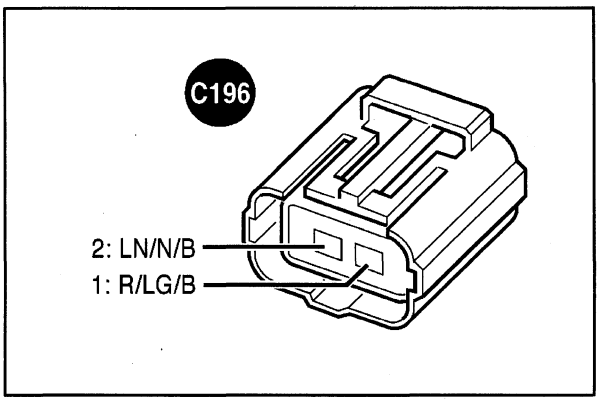

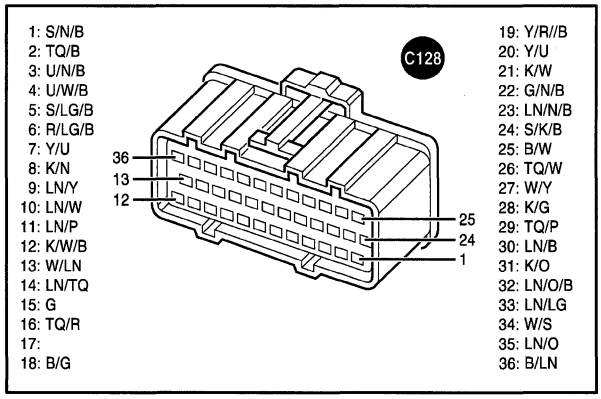

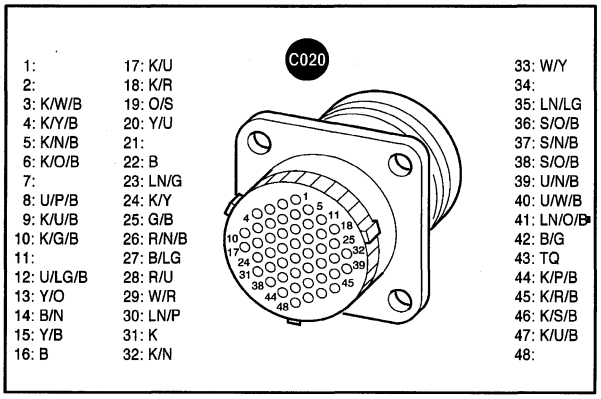

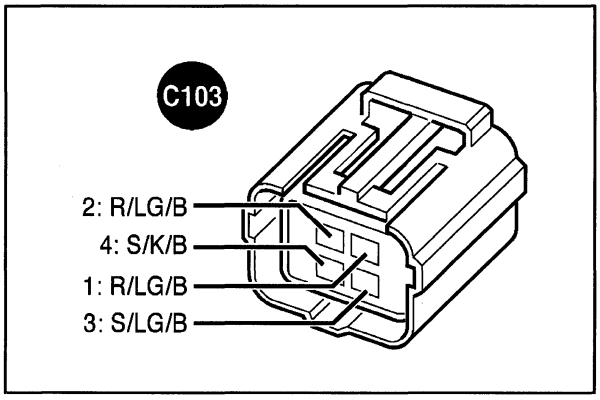

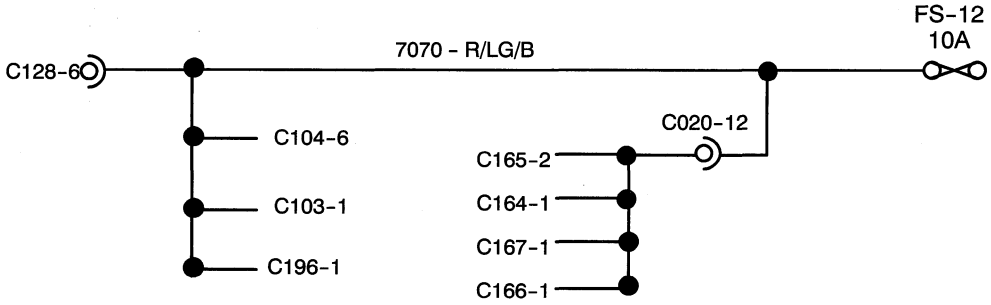

DIAGRAM 19 - Error code E46 displayed - Fuse 12 blown.

No power to switches, 1-4/5-8/shuttle dump/high range/low range/powershift up-down and gearshift display module.

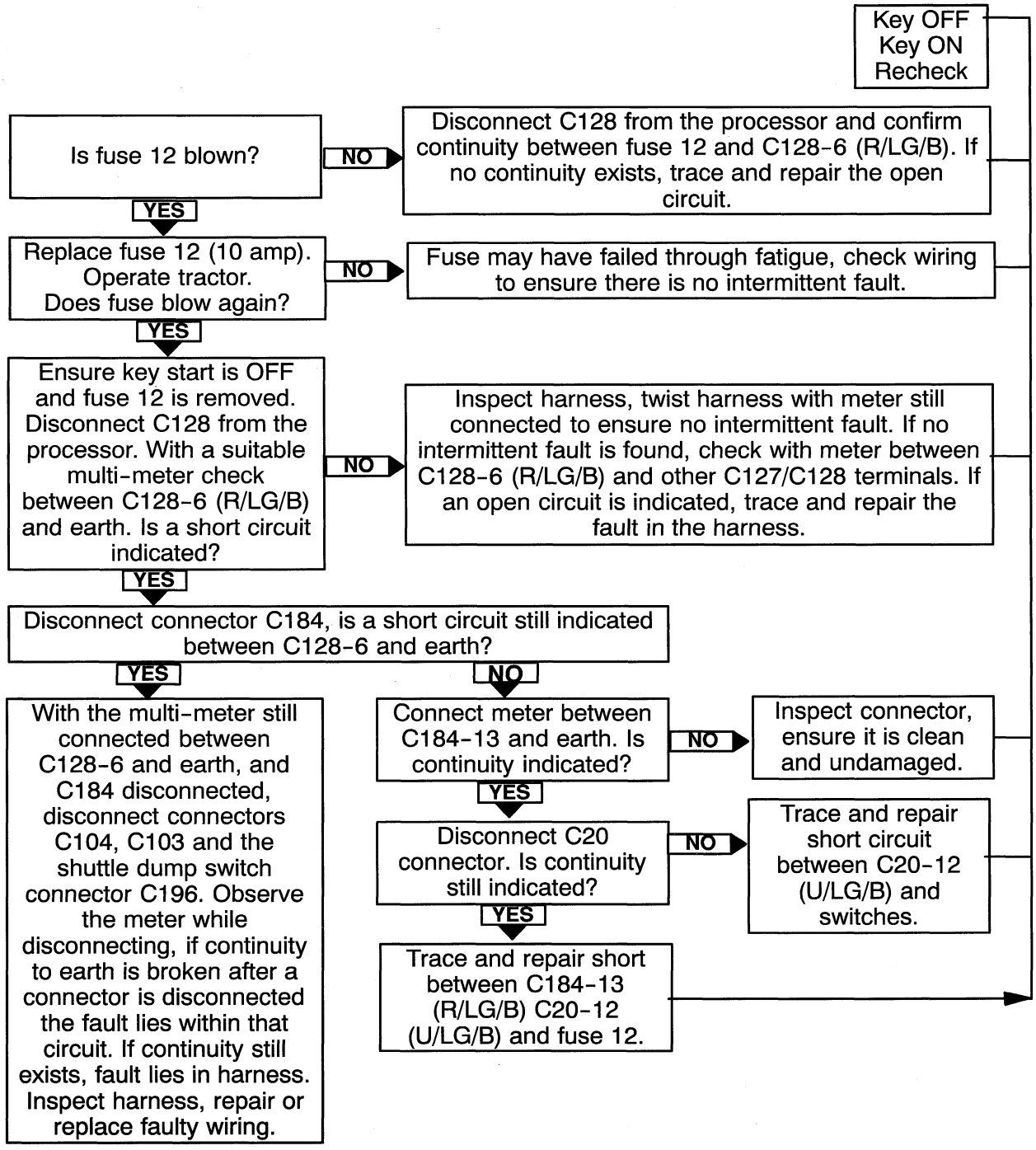

DIAGRAM 20 - Error Codes E51 or E52

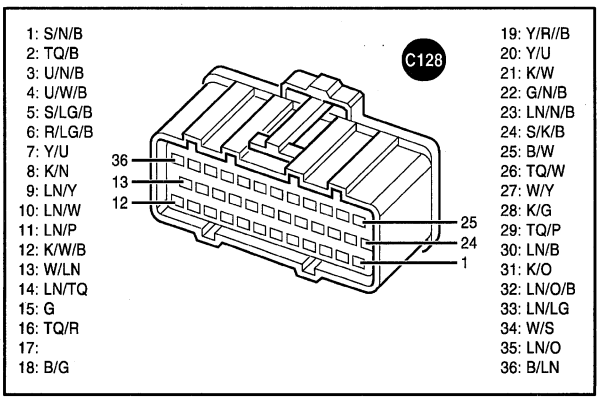

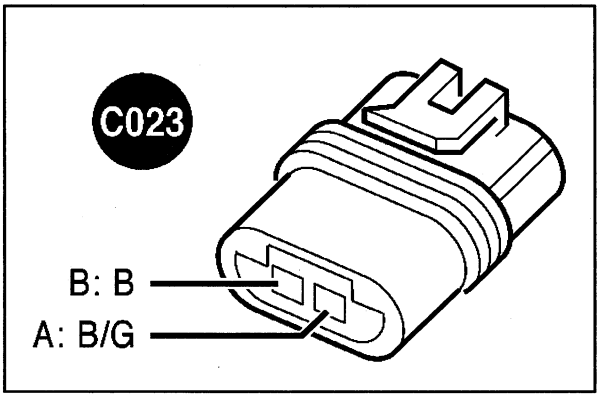

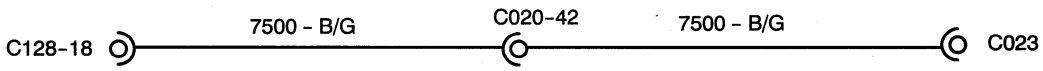

DIAGRAM 20 - Error Codes E51 or E52

Transmission oil Temperature wiring open circuit or short circuit

NOTE: E51 may be generated in extreme cold conditions, i.e, less than -305C
E52 may be generated in extreme hot conditions, i.e, greater than 1305C

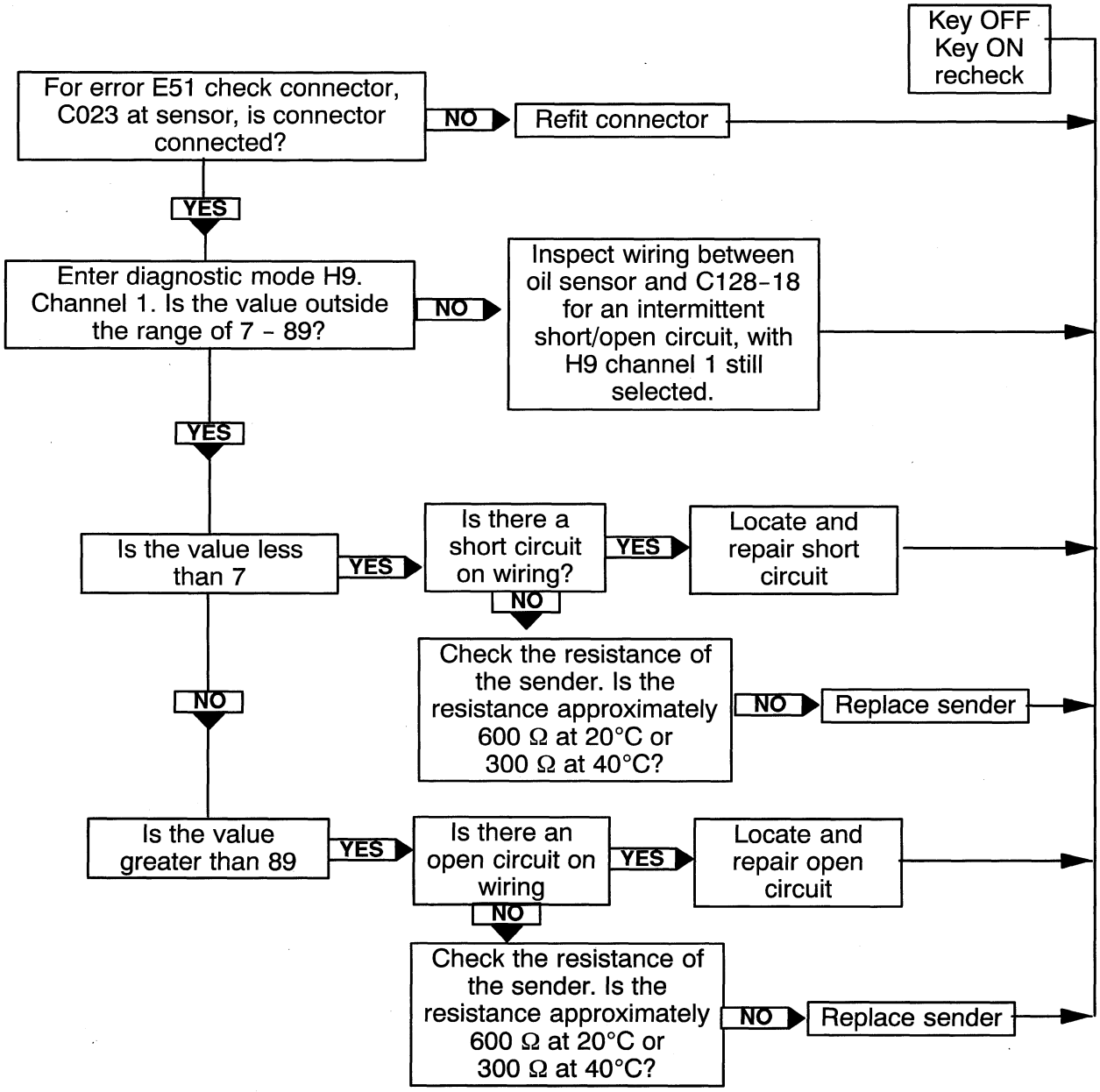

NOTES

DIAGRAM 21 - Error Code E24 - all clutches not calibrated
Error Code EC4 - clutch 4 not calibrated
Error Code EC3 - clutch 3 not calibrated
Error Code EC2 - clutch 2 not calibrated
Error Code EC1 - clutch 1 not calibrated

Perform spring calibration procedure to clear error.

Note: *These errors will only occur after installation of a new processor or after a 'H8' (clear processor memory operation)*

DIAGRAM 22 - E15 - High/Low switches both ON

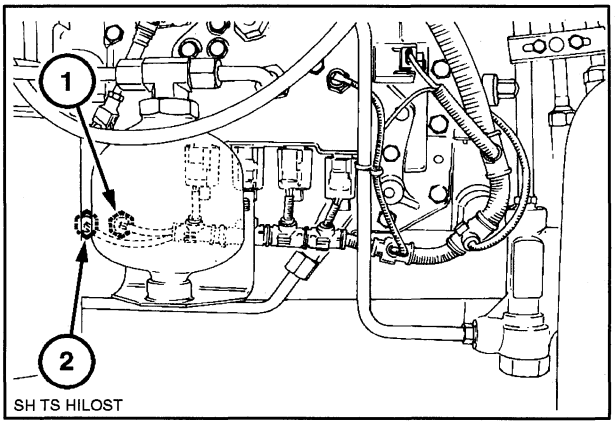

1. High range switch
2. Low range switch

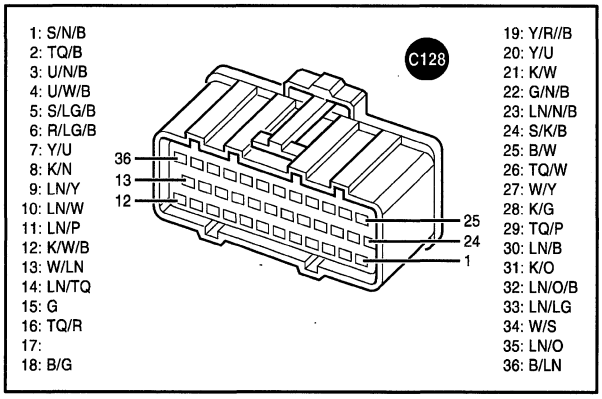

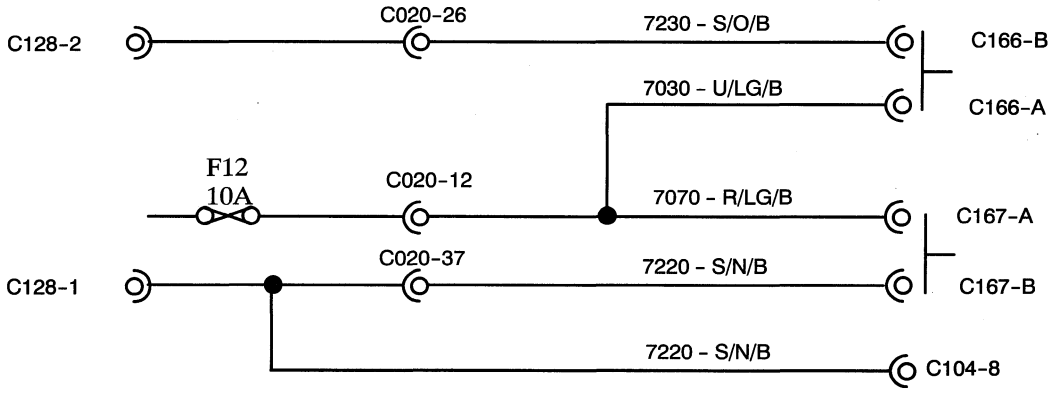

DIAGRAM 22 - E15 - High/Low switches both ON

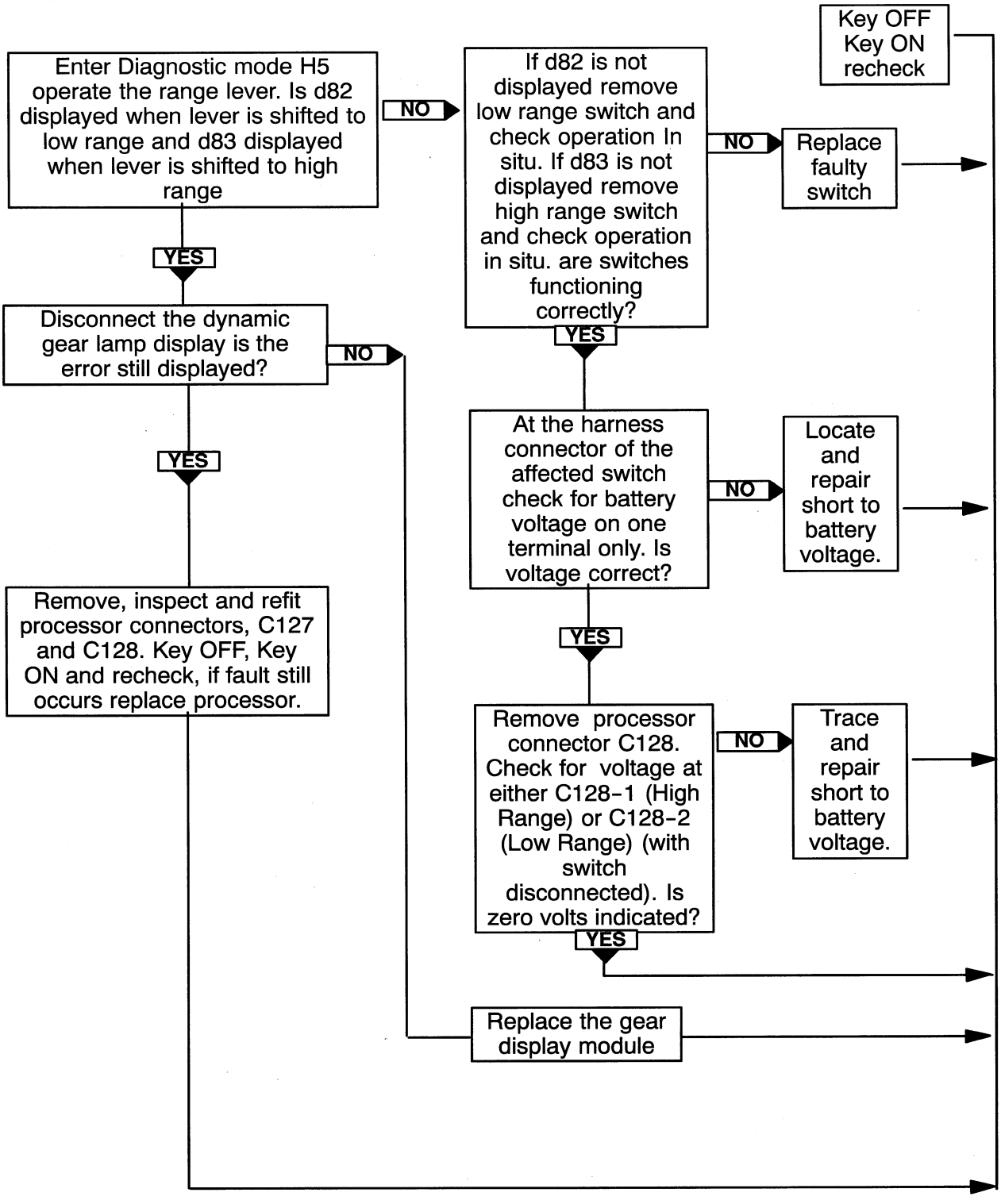

DIAGRAM 23 - E14 - 1-4/5-8 switches both ON

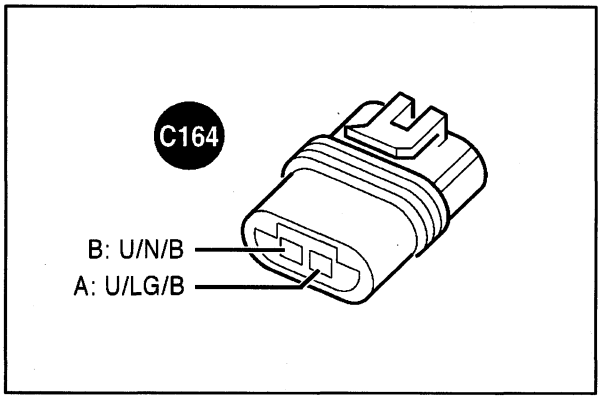

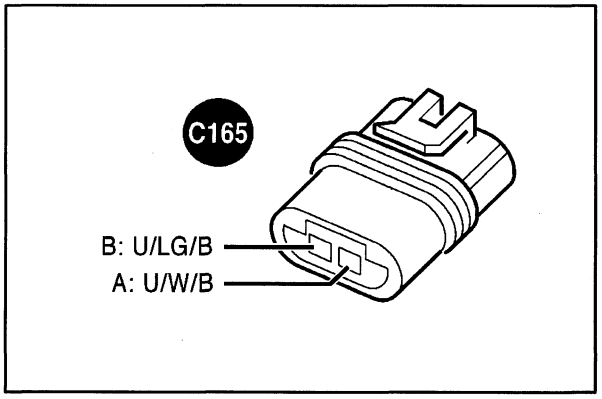

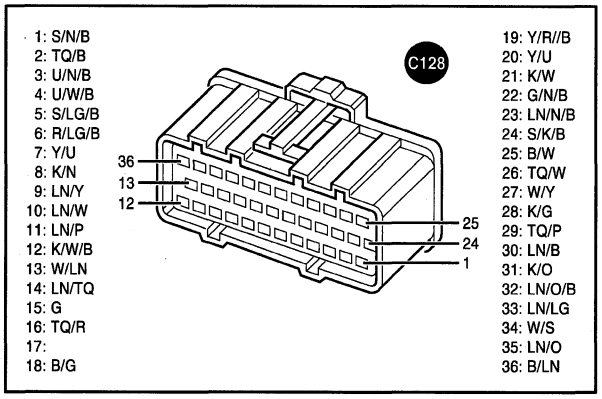

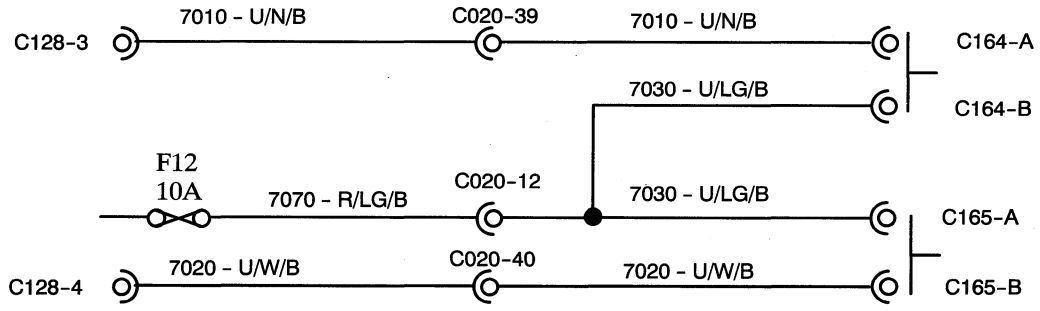

DIAGRAM 23 - E14 - 1-4/5-8 switches both ON

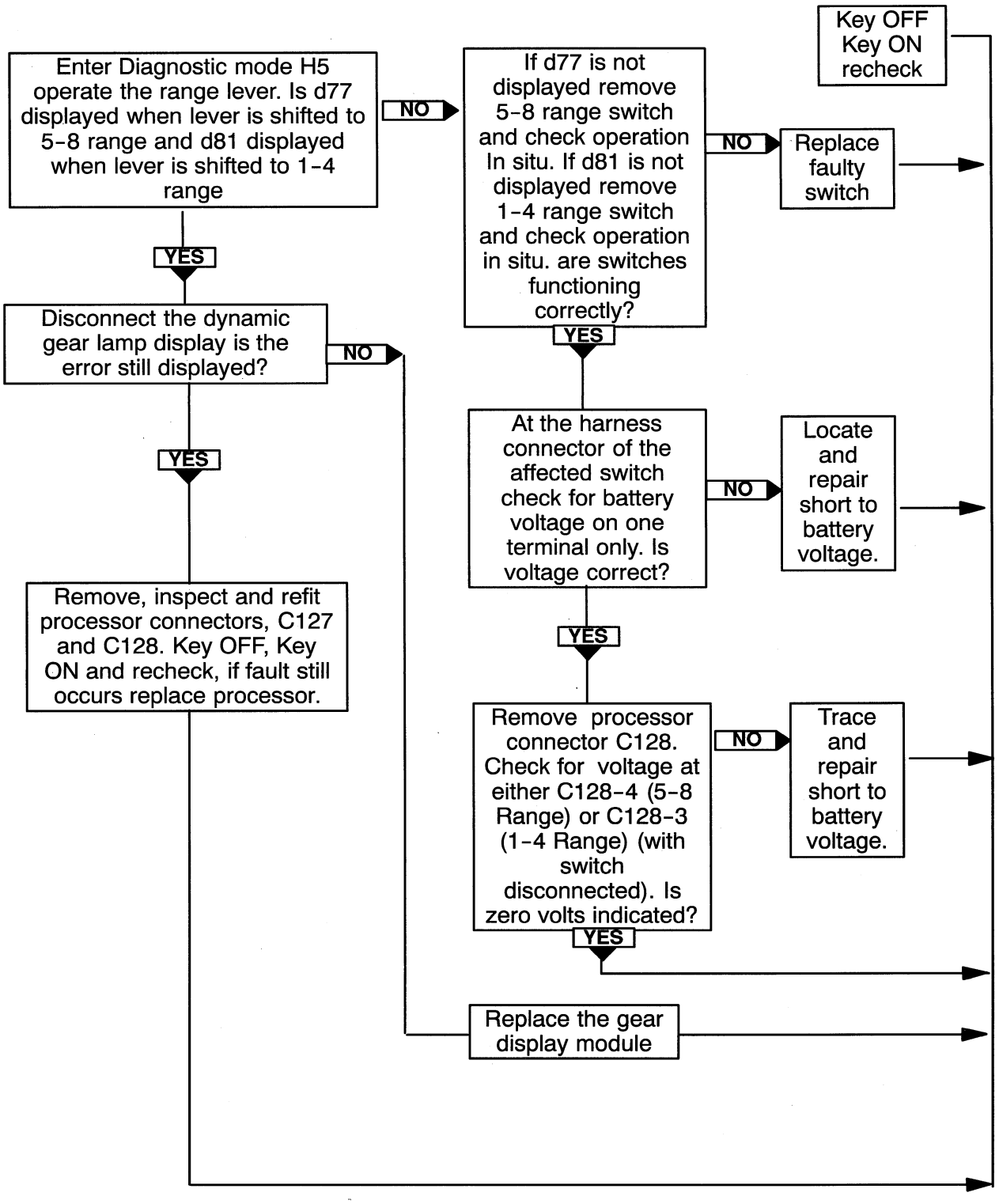

DIAGRAM 24 - ERROR CODE E55 No Signal From Output Speed Sensor

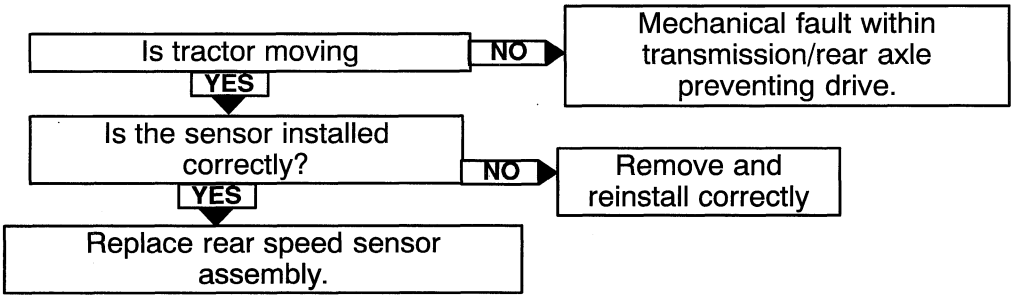

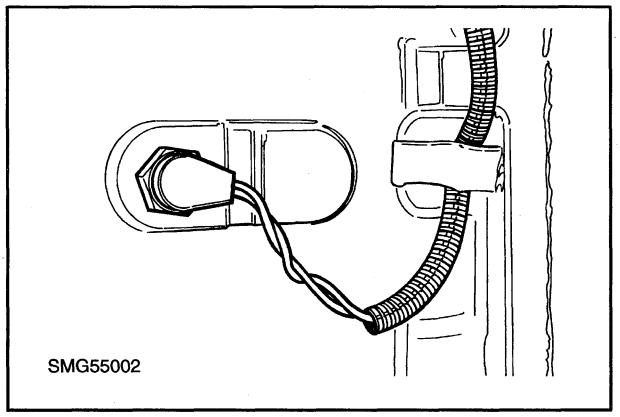

NOTES

DIAGRAM 25 - ERROR CODE E56 Differential Lock Switch Error

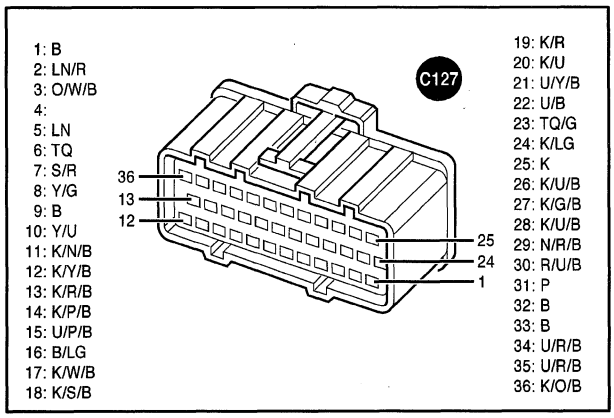

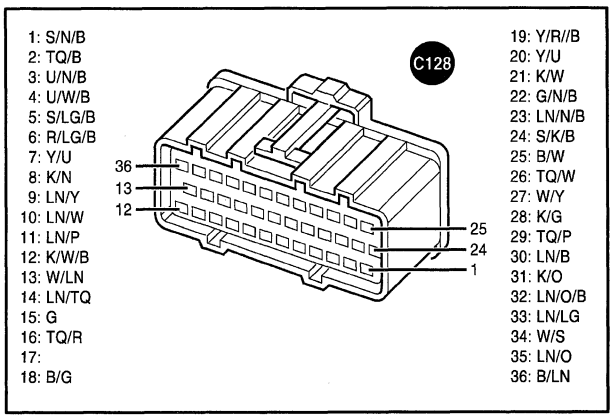

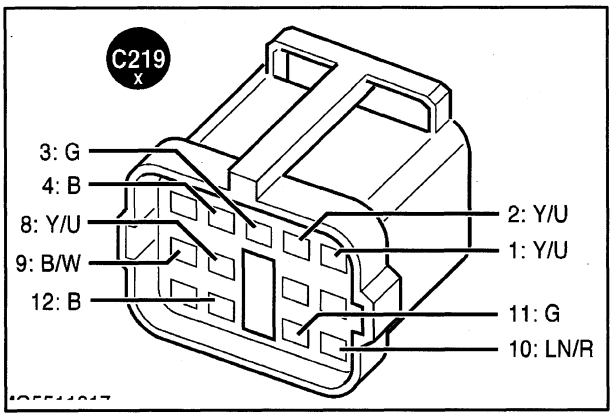

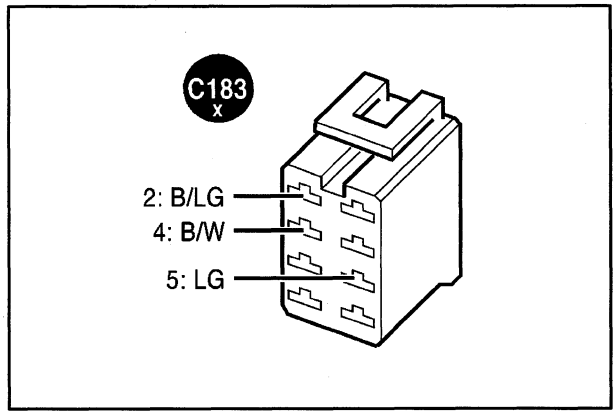

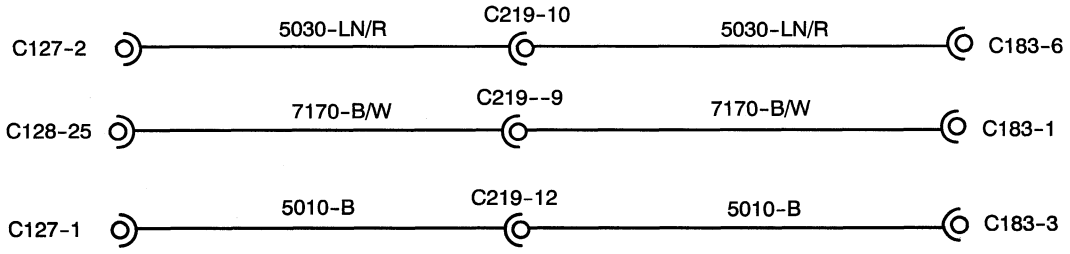

DIAGRAM 25 - ERROR CODE E56 Differential Lock Switch Error

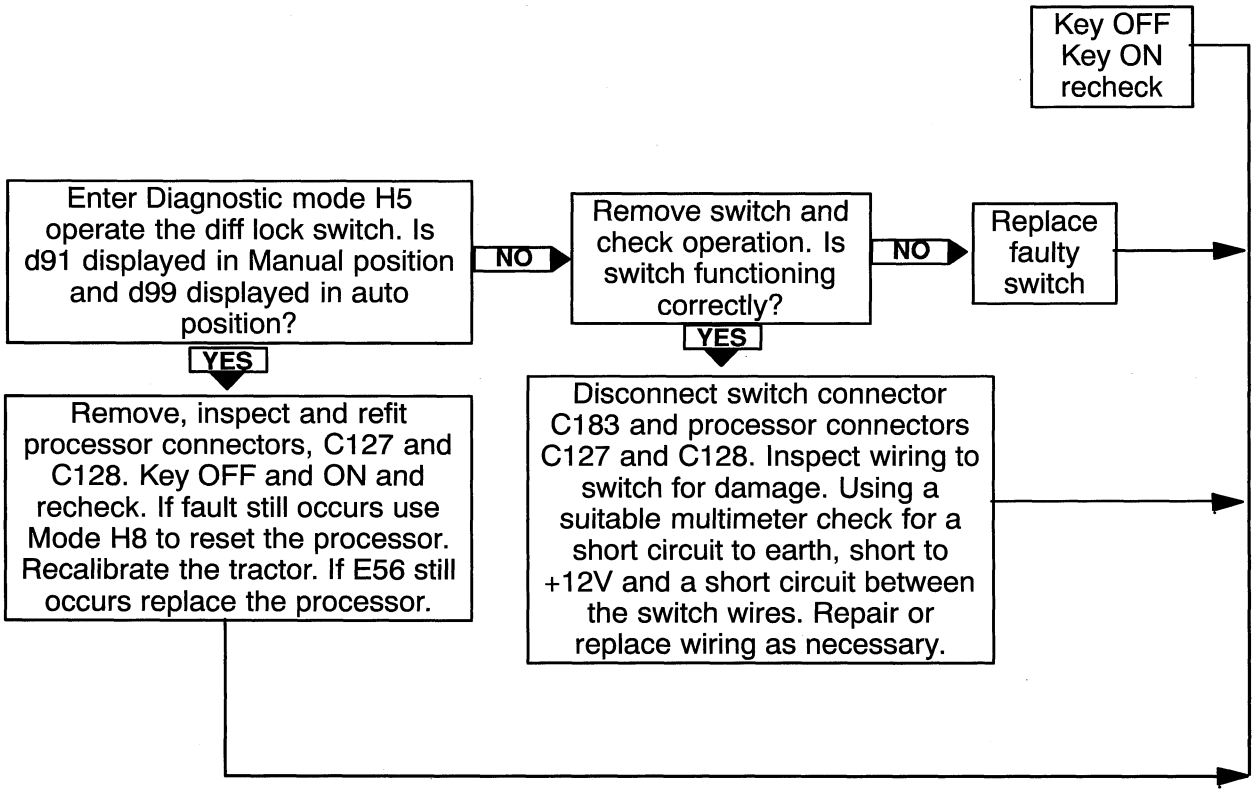

DIAGRAM 26 - Error Code E49

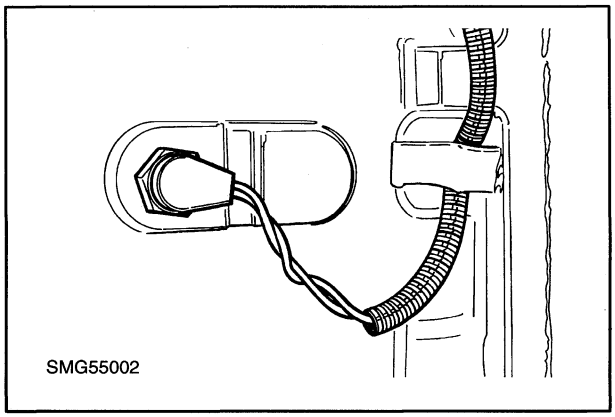

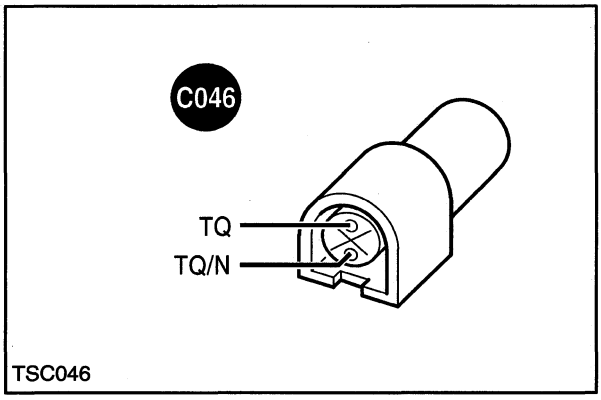

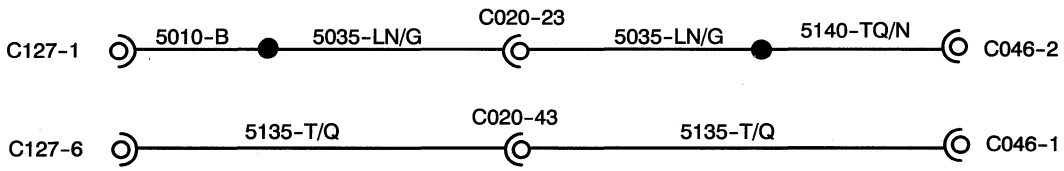

DIAGRAM 26 - Error Code E49

Wheel speed sensor open or short circuit.

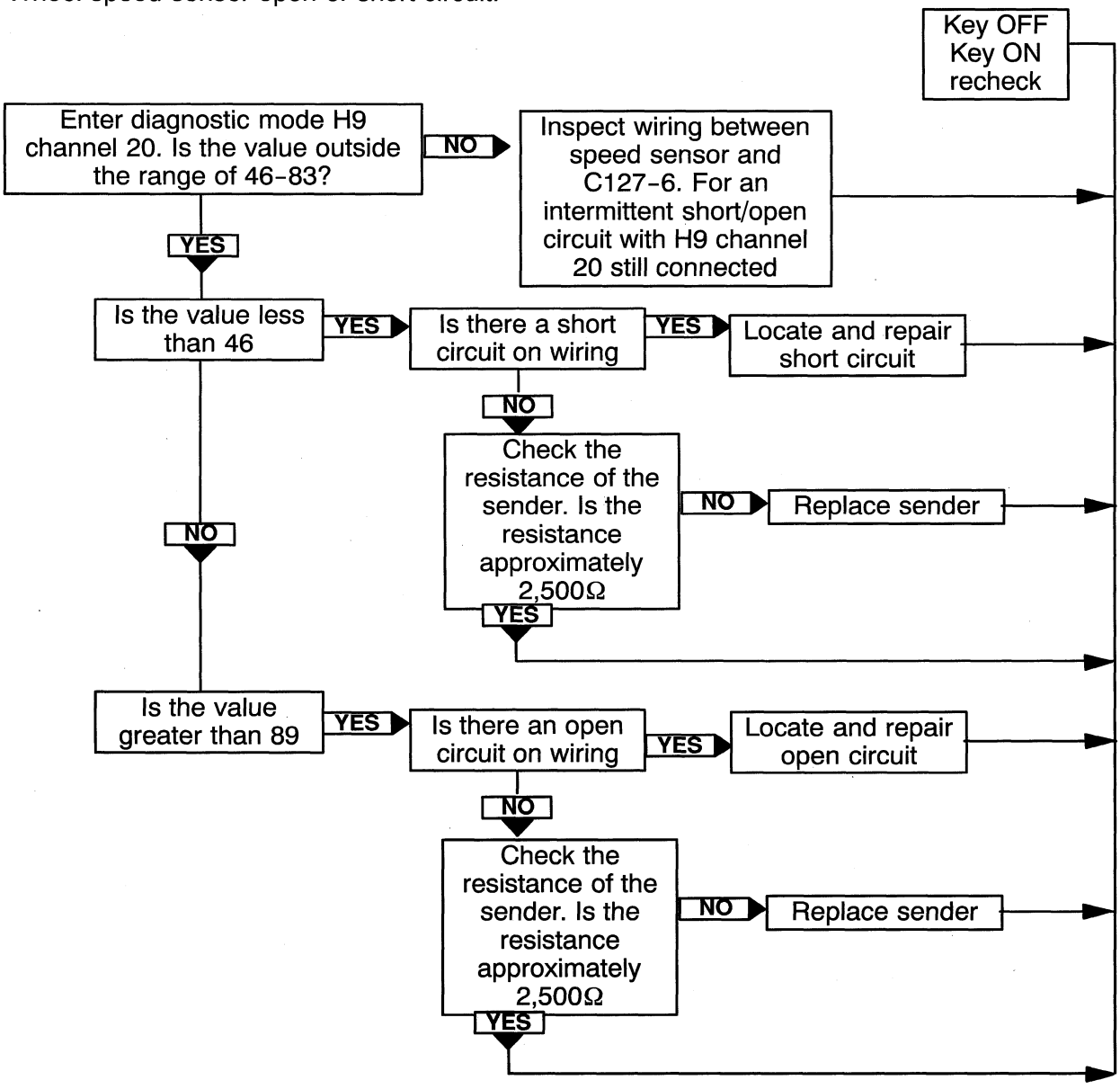

DIAGRAM 27 - Error Code E26 displayed - ERPM signal too high

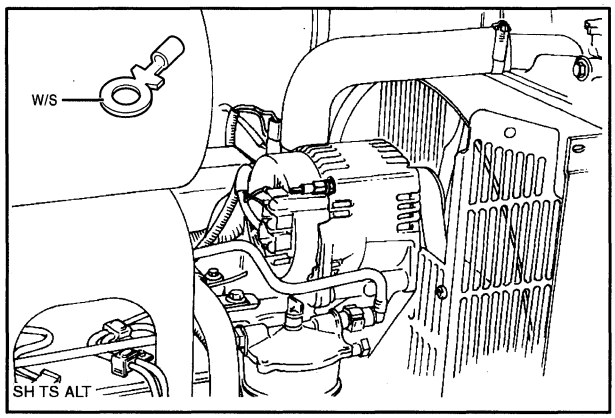

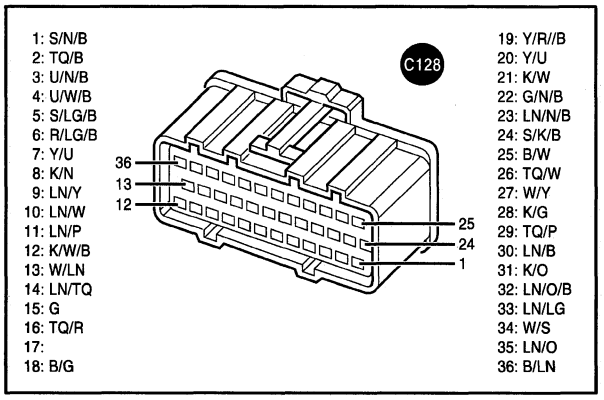

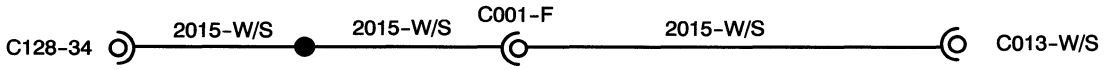

DIAGRAM 27 - Error Code E26 displayed - ERPM signal too high

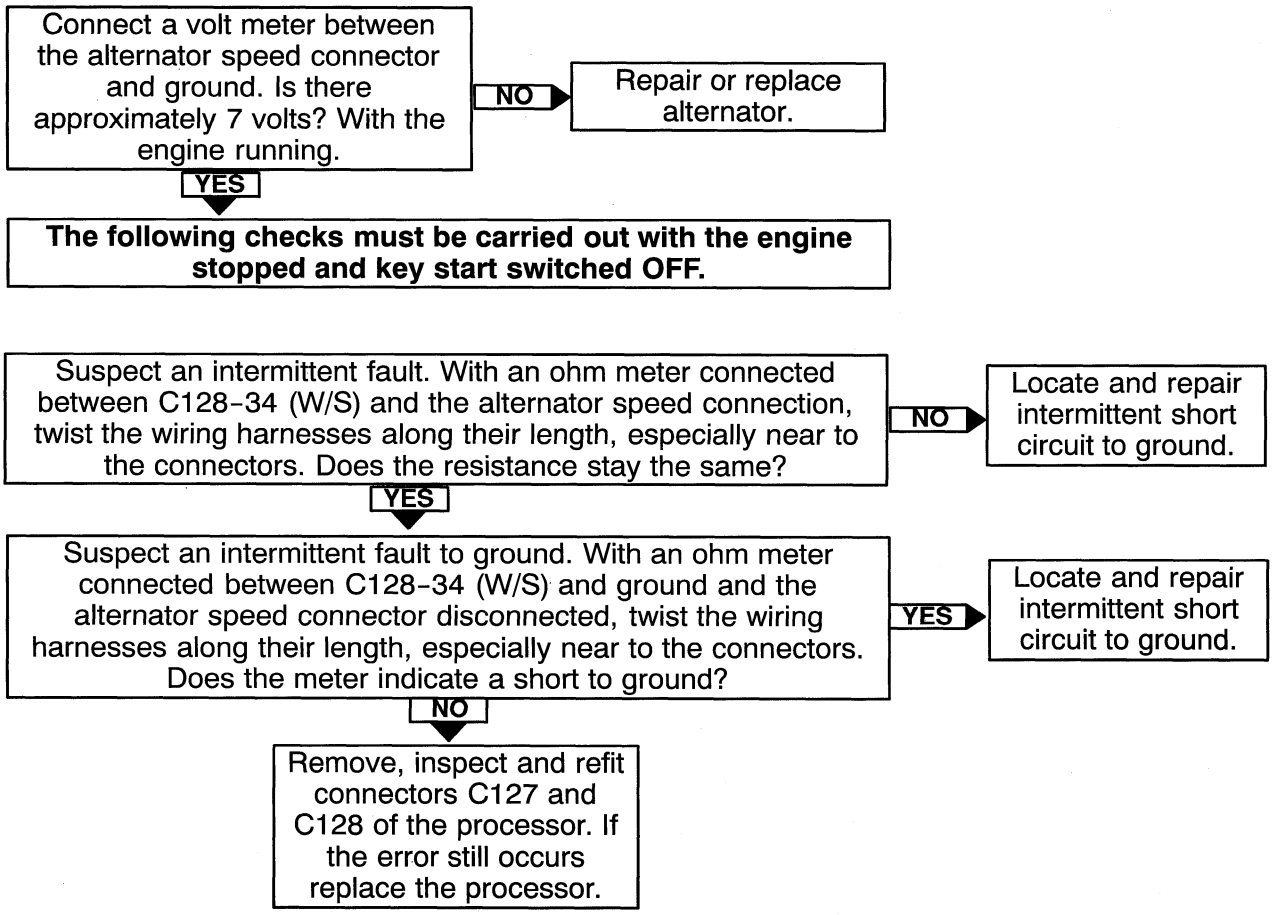

DIAGRAM 28 - Error Code E27 displayed - ERPM signal not present

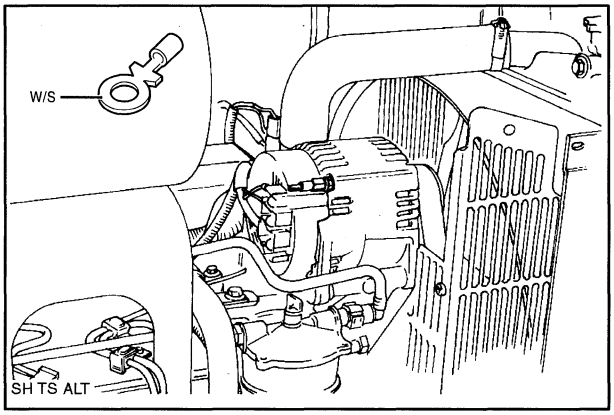

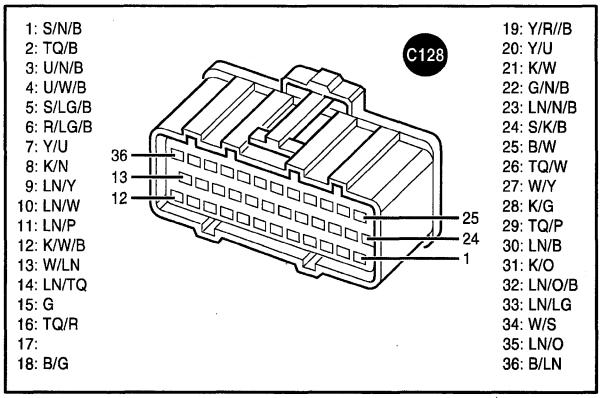

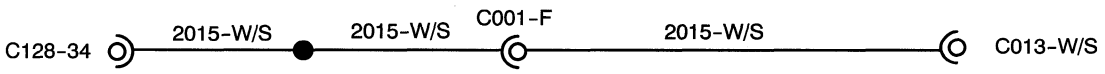

DIAGRAM 28 - Error Code E27 displayed - ERPM signal not present

Wheel speed sensor open or short circuit.

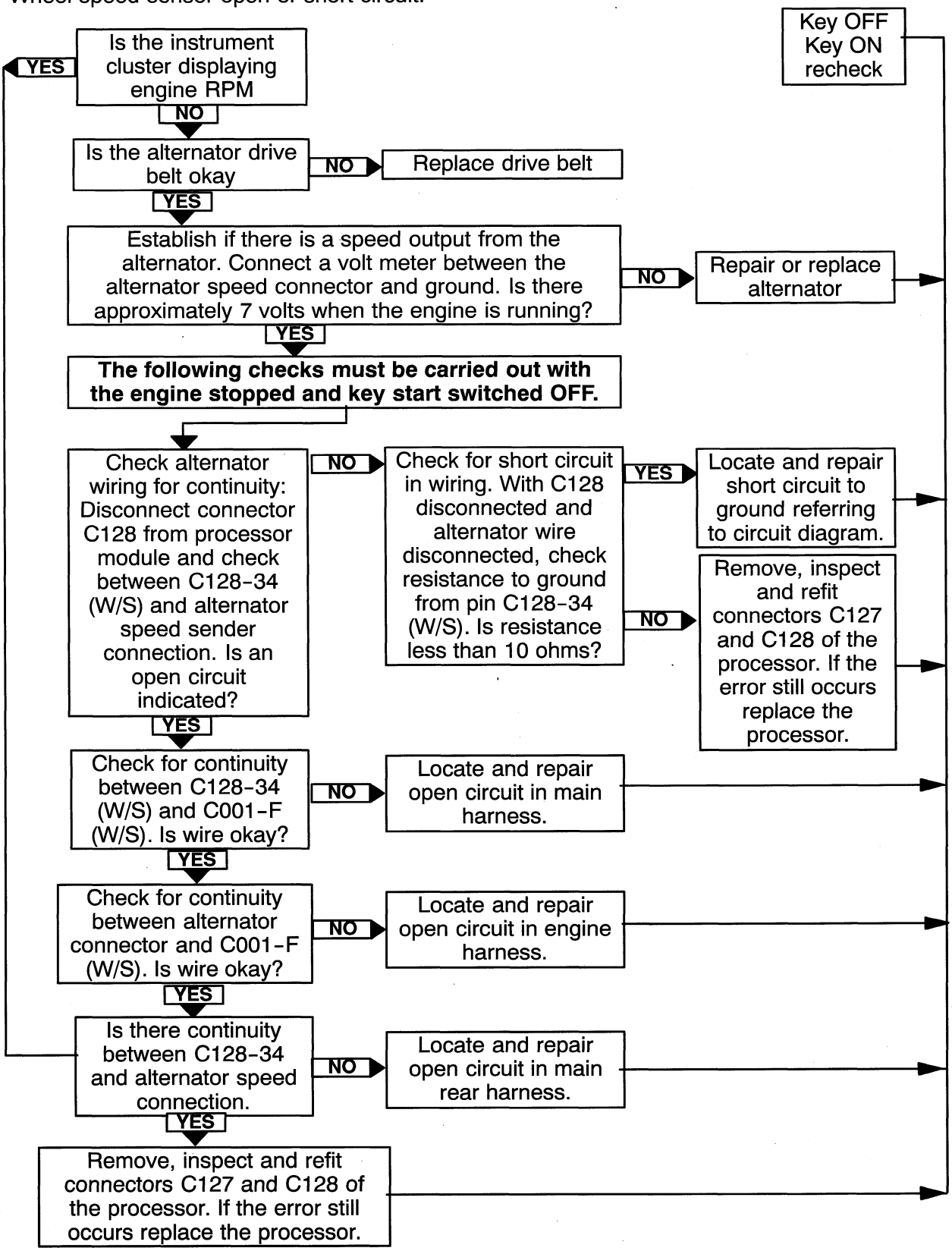

DIAGRAM 29 - Error Code E59 displayed - Forward/Neutral/Reverse Switch disagreement (More than one or no switches applied)

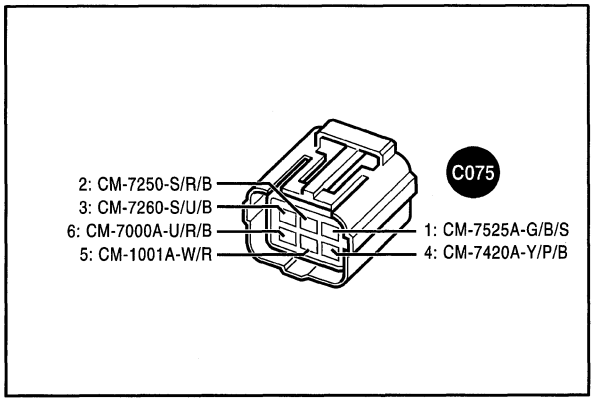

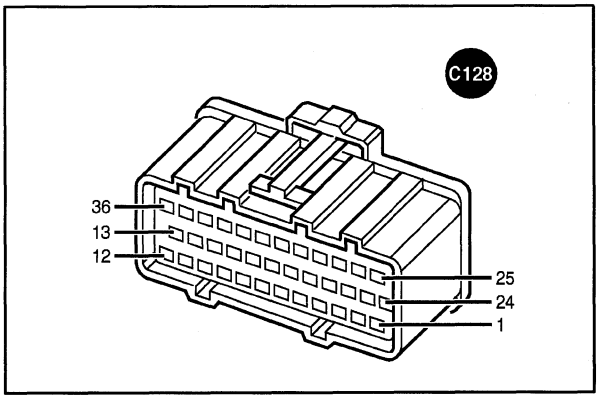

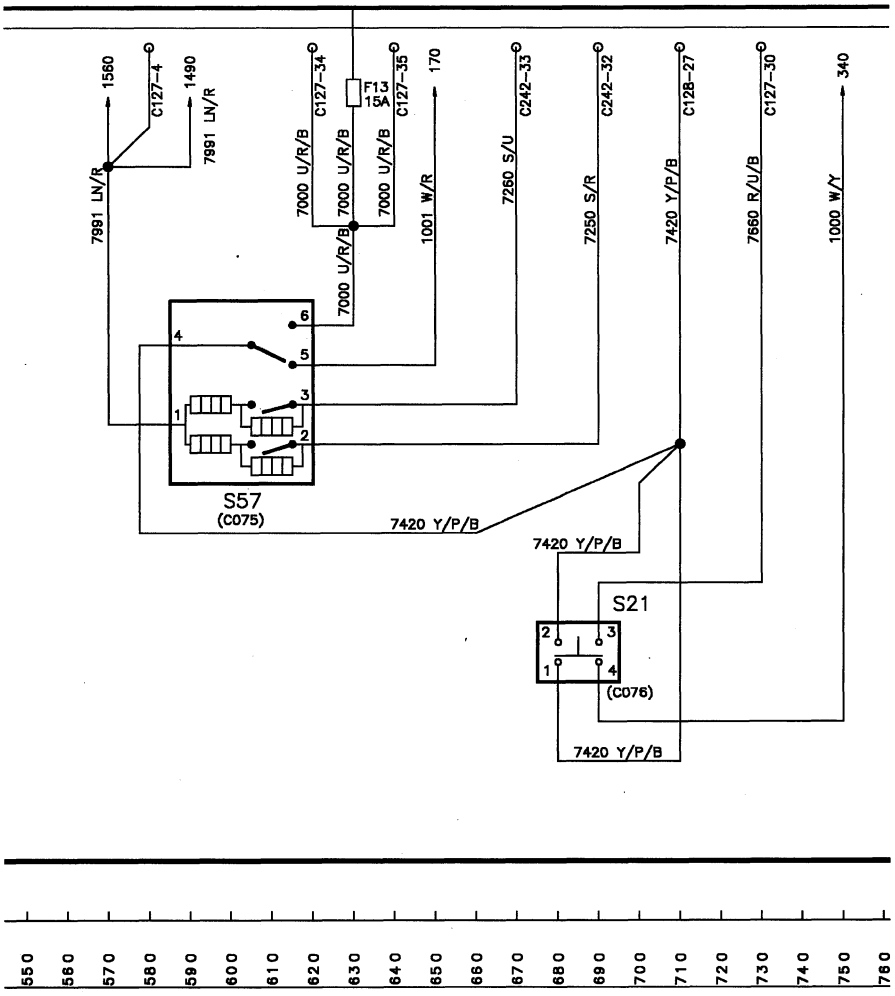

DIAGRAM 29 - E59 - Forward/Neutral/Reverse Switch disagreement (More than one or no switches applied)
EFFECTS - Transmission enabled

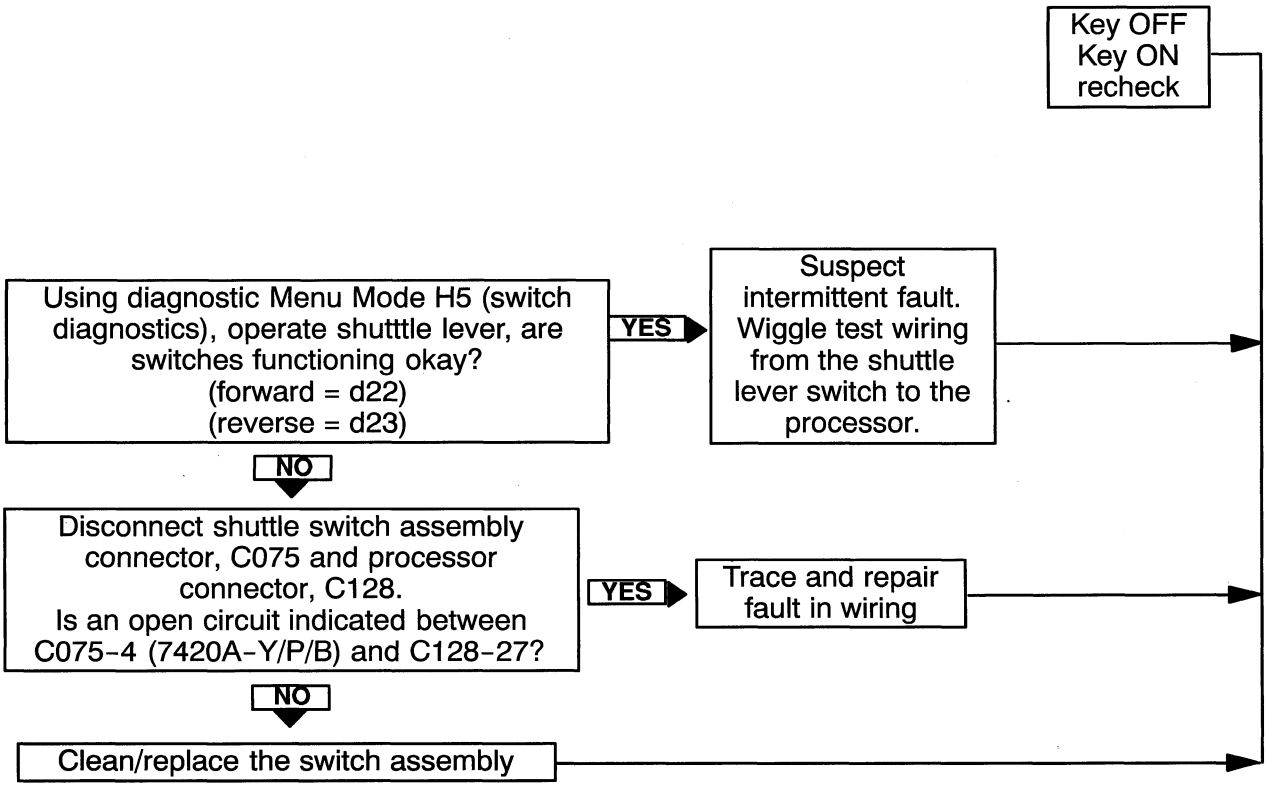

DIAGRAM 30 - Error Code E60 displayed - Forward Synchroniser becomes disengaged
Error Code E69 displayed - Reverse Synchroniser becomes diisengaged

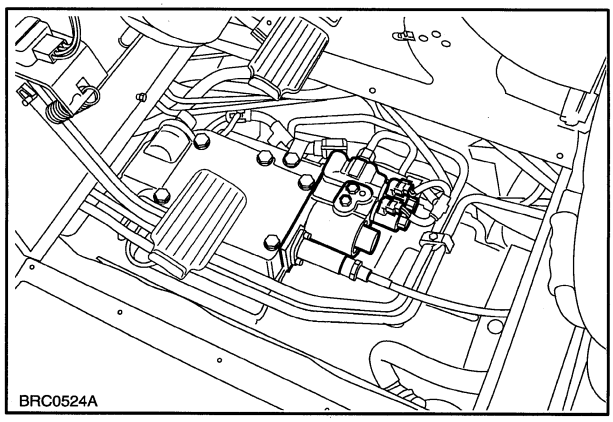

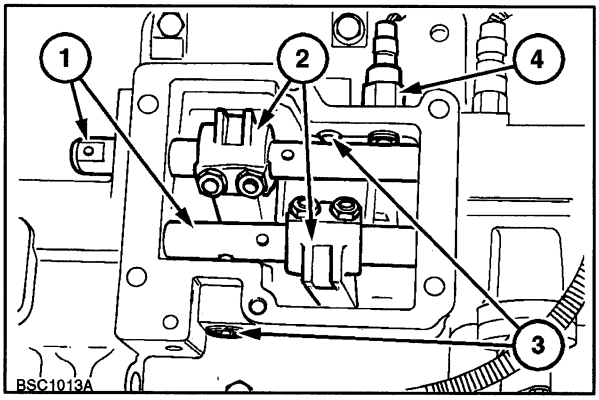

DIAGRAM 30 - E60 - Forward Synchroniser becomes disengaged
E69 - Reverse Synchroniser becomes disengaged

EFFECTS - Transmission is Disabled

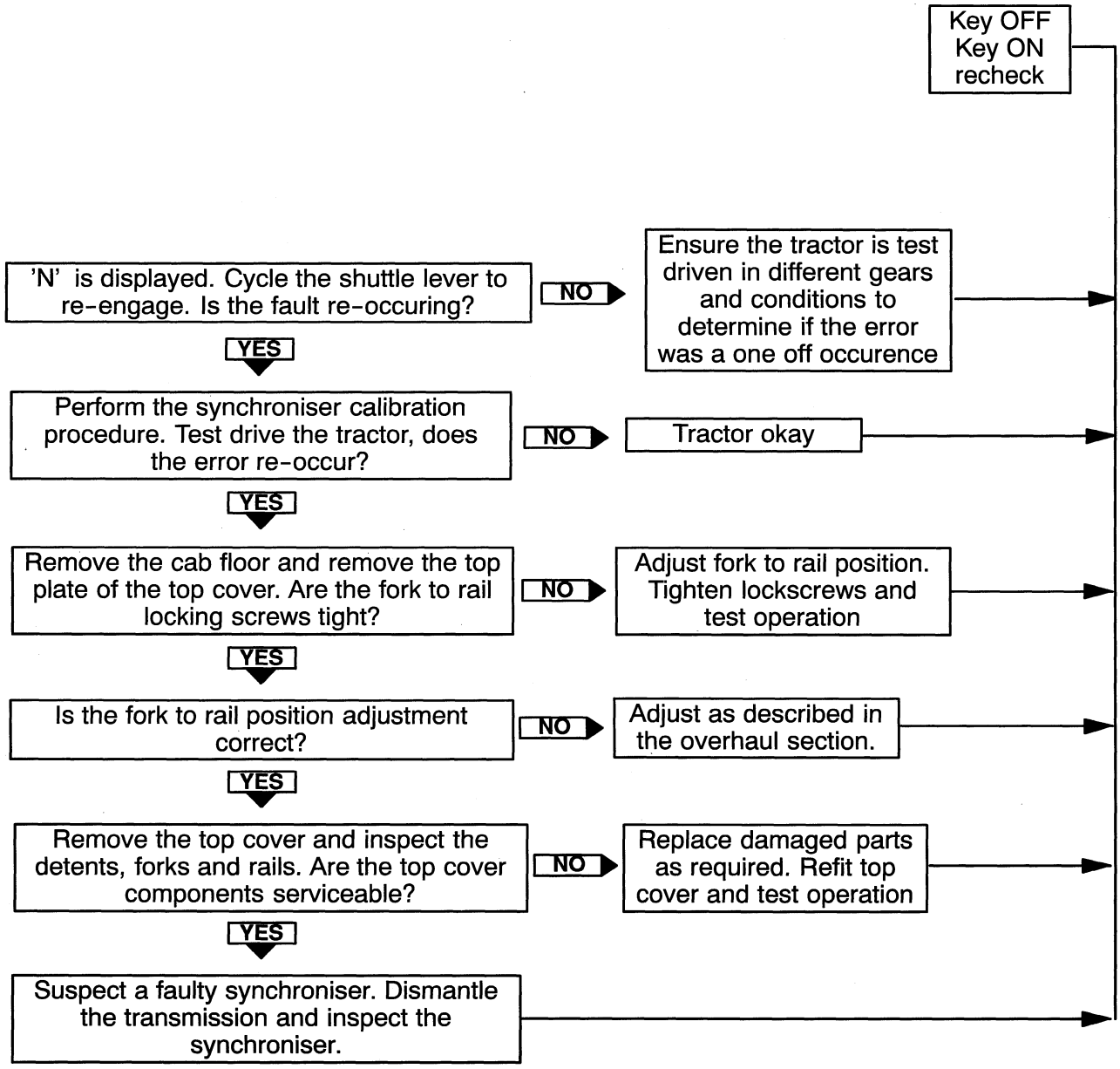

DIAGRAM 31 - Error Code E61 displayed - Synchro Potentiometer voltage too high
Error Code E62 displayed - Synchro Potentiometer voltage too low

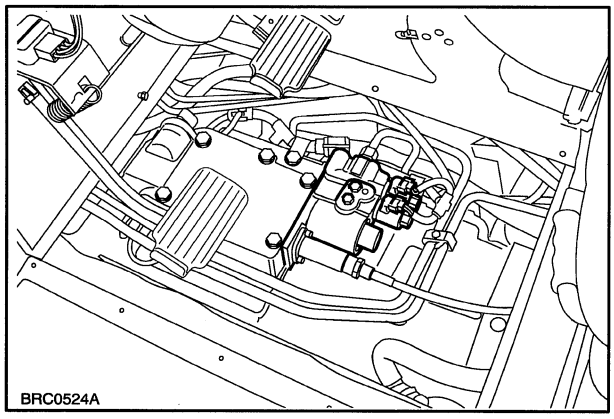

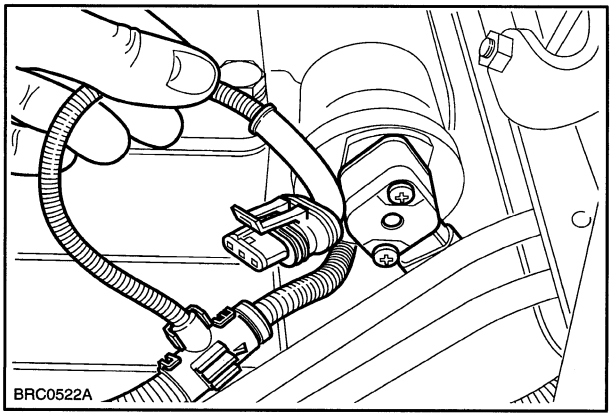

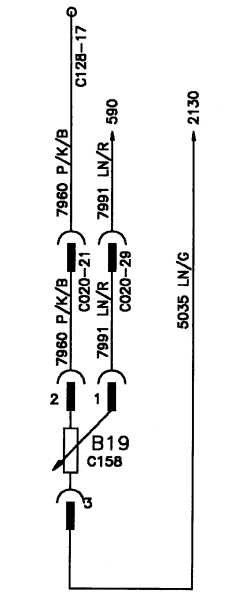

DIAGRAM 31 - E61 - Synchro Potentiometer voltage too high
E62 - Synchro Potentiometer voltage to low

EFFECTS - Transmission is Disabled

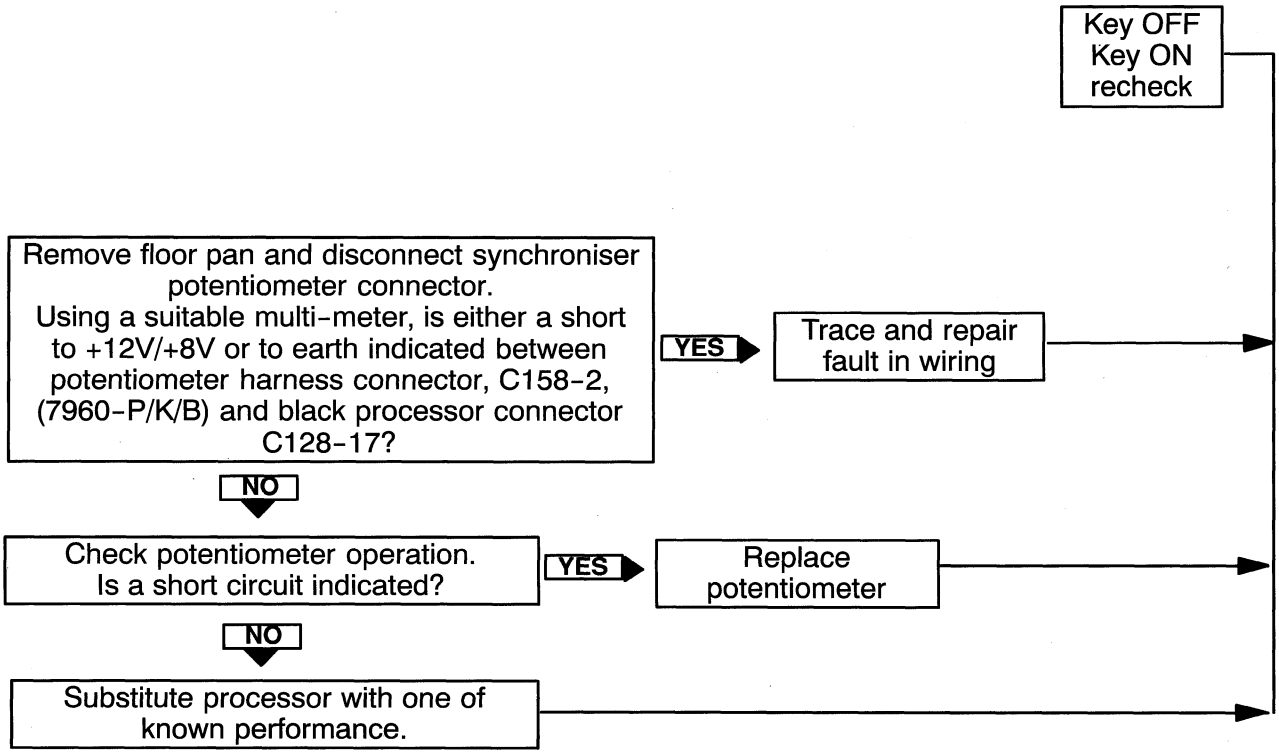

DIAGRAM 32 - Error Code E63 displayed - Synchroniser not fully engaging into forward
Error Code E64 displayed - Synchroniser not fully engaging into reverse

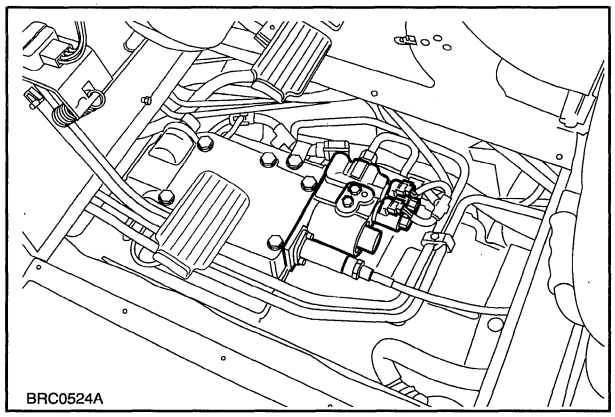

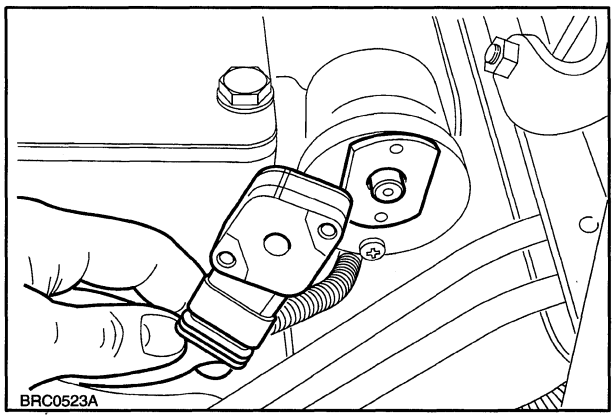

DIAGRAM 32 - E63 - Synchroniser not fully engaging into forward
E64 - Synchroniser not fully engaging into reverse

EFFECTS - Transmission is Disabled

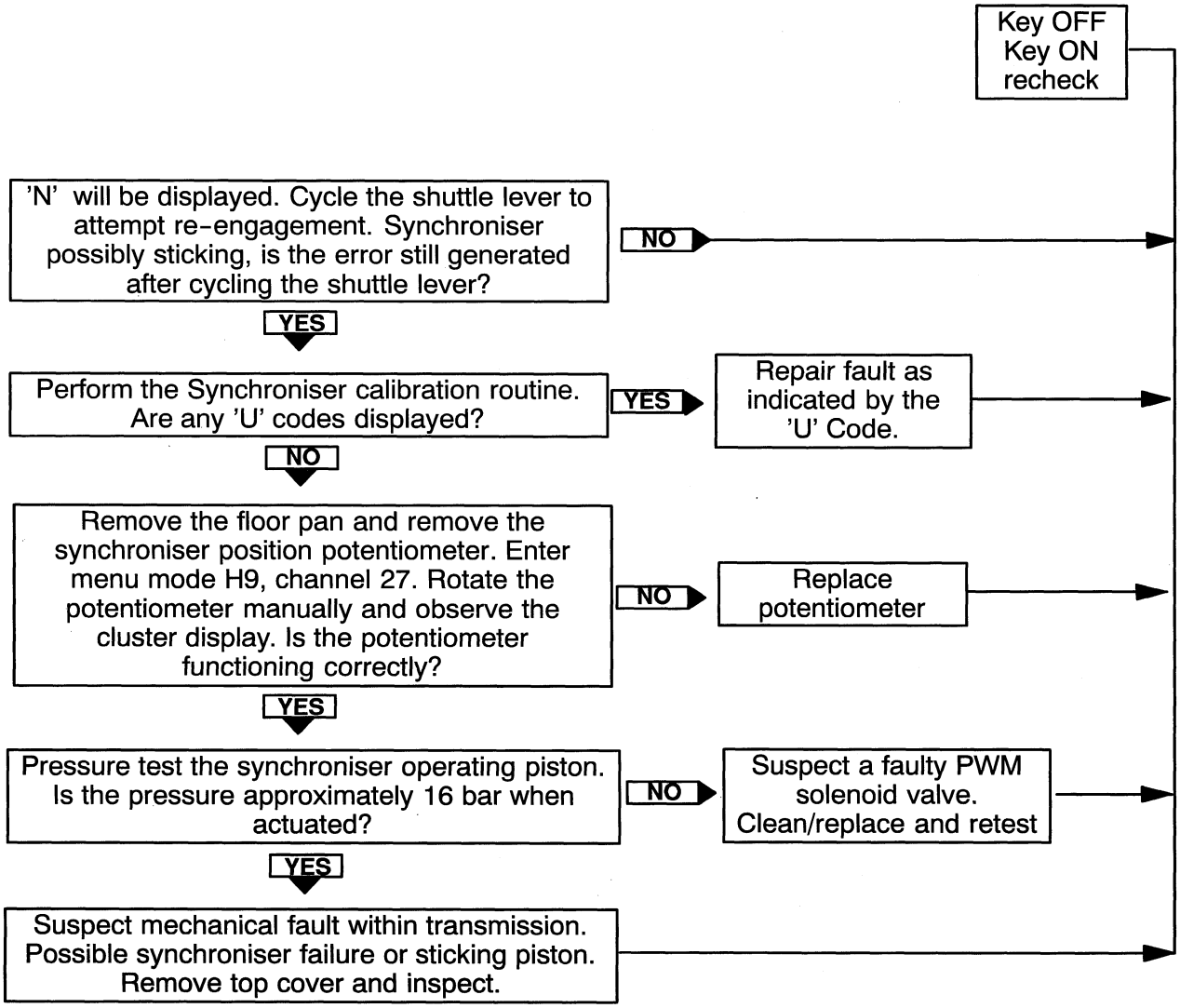

DIAGRAM 33 - Error Code E65 displayed - Forward Synchroniser solenoid open circuit
Error Code E66 displayed - Reverse Synchroniser solenoid open circuit

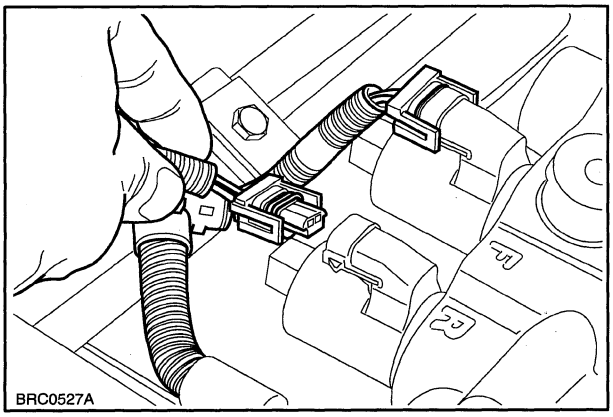

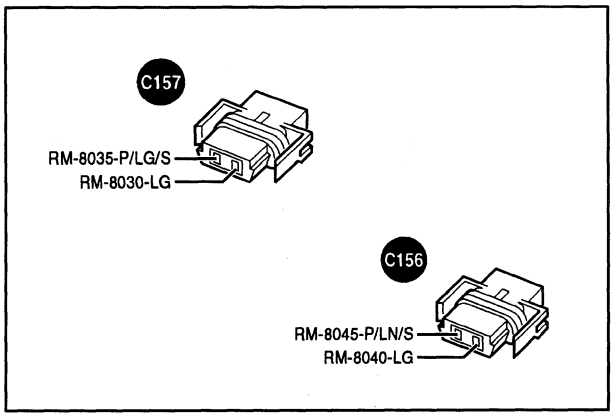

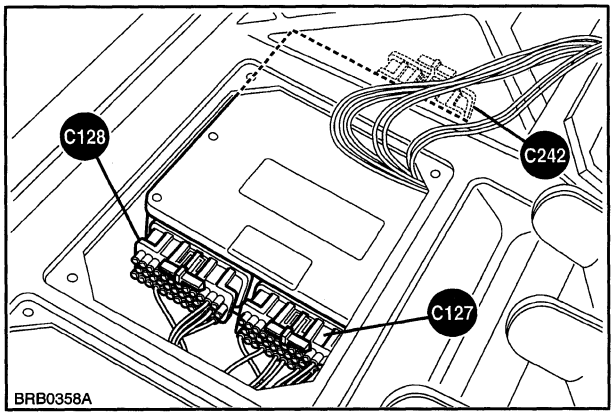

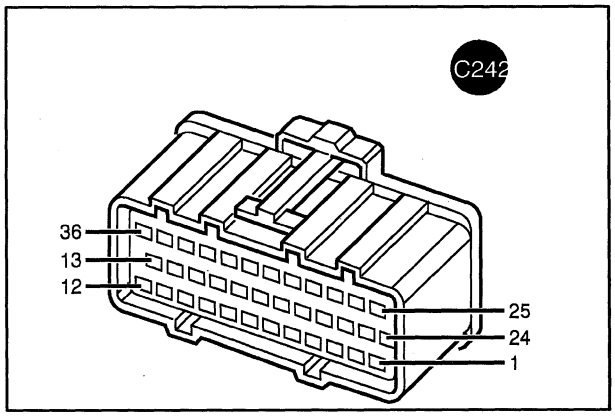

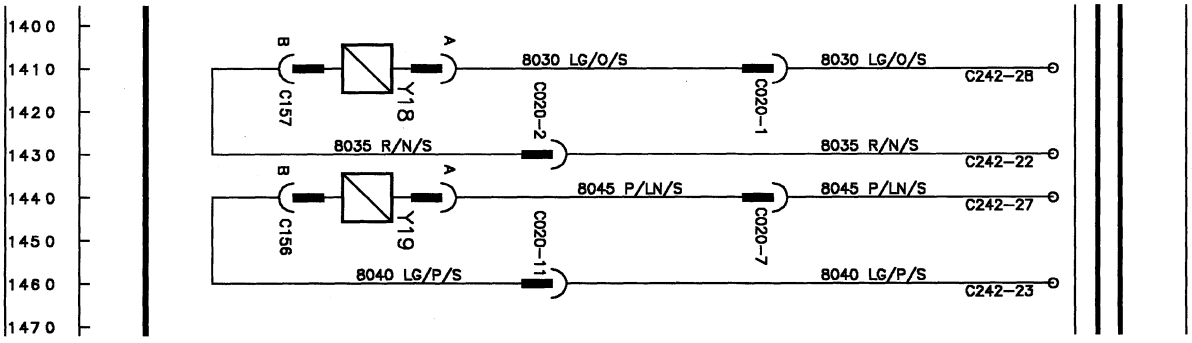

DIAGRAM 33 - E65 - Forward Synchroniser solenoid open circuit
E65 - Reverse Synchroniser solenoid open circuit

EFFECTS - Transmission is Disabled

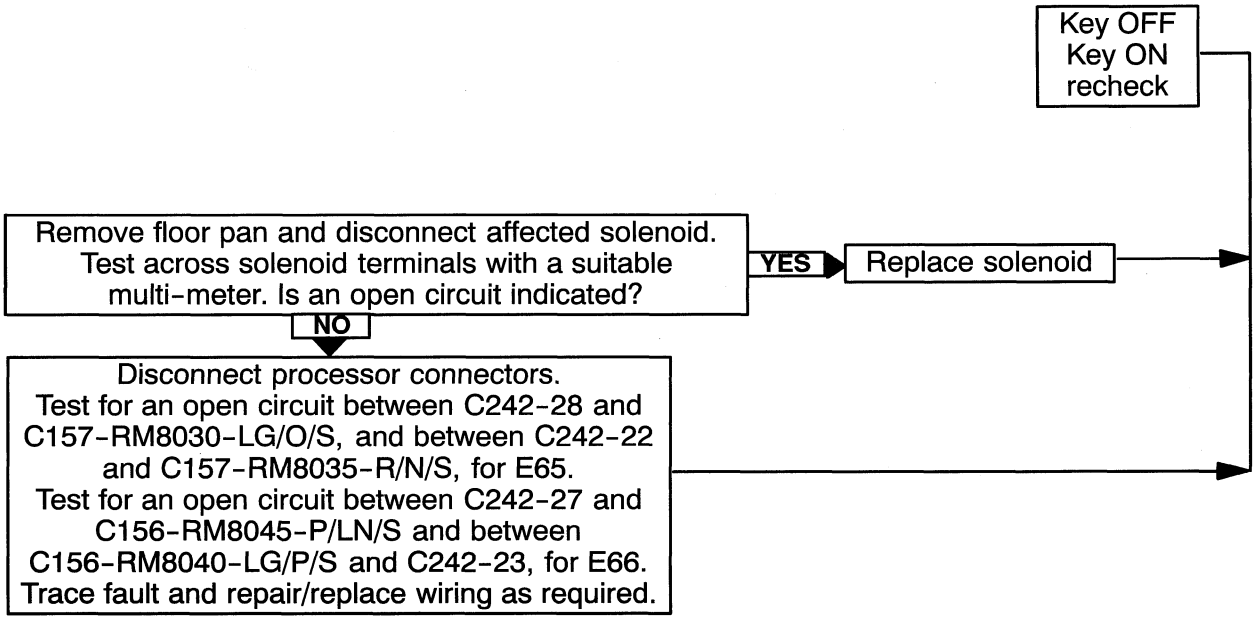

DIAGRAM 34 - Error Code E67 displayed - Forward Synchroniser solenoid short circuit
Error Code E68 displayed - Reverse Synchroniser solenoid short circuit

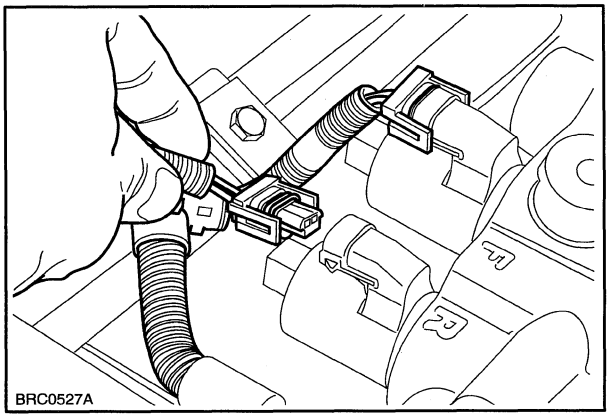

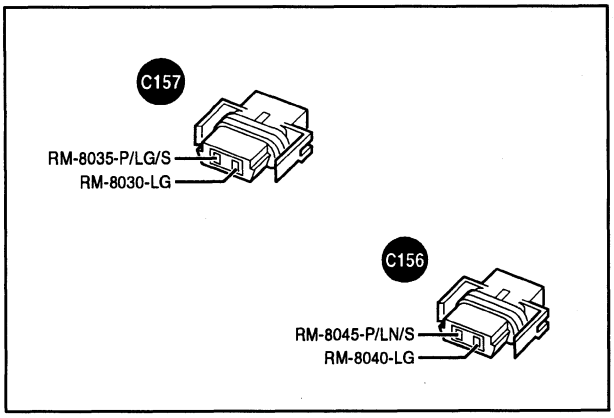

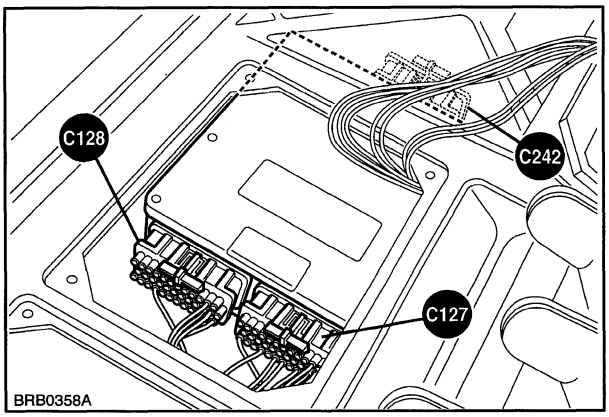

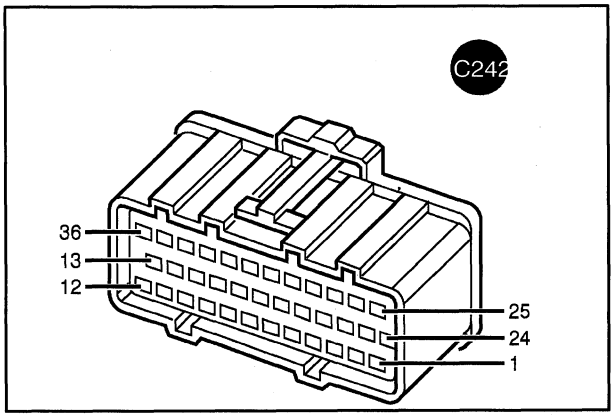

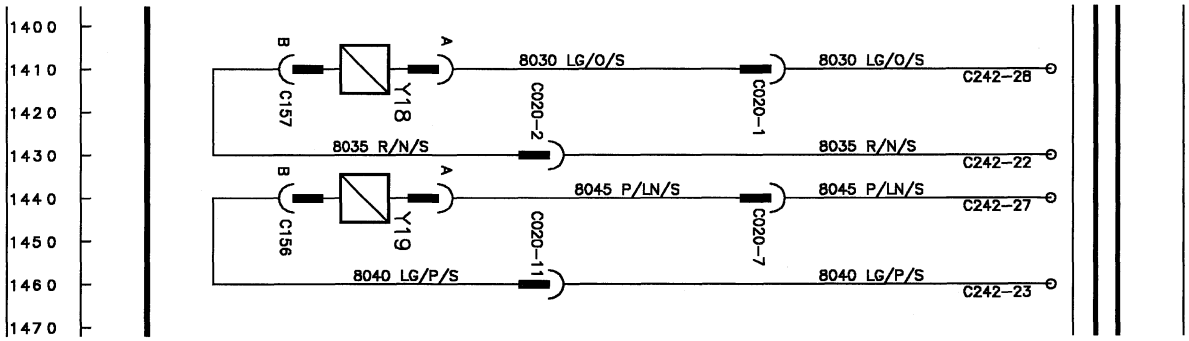

DIAGRAM 34 - E67 - Forward Synchroniser solenoid short circuit
E68 - Reverse Synchroniser solenoid short circuit

EFFECTS - Transmission is Disabled

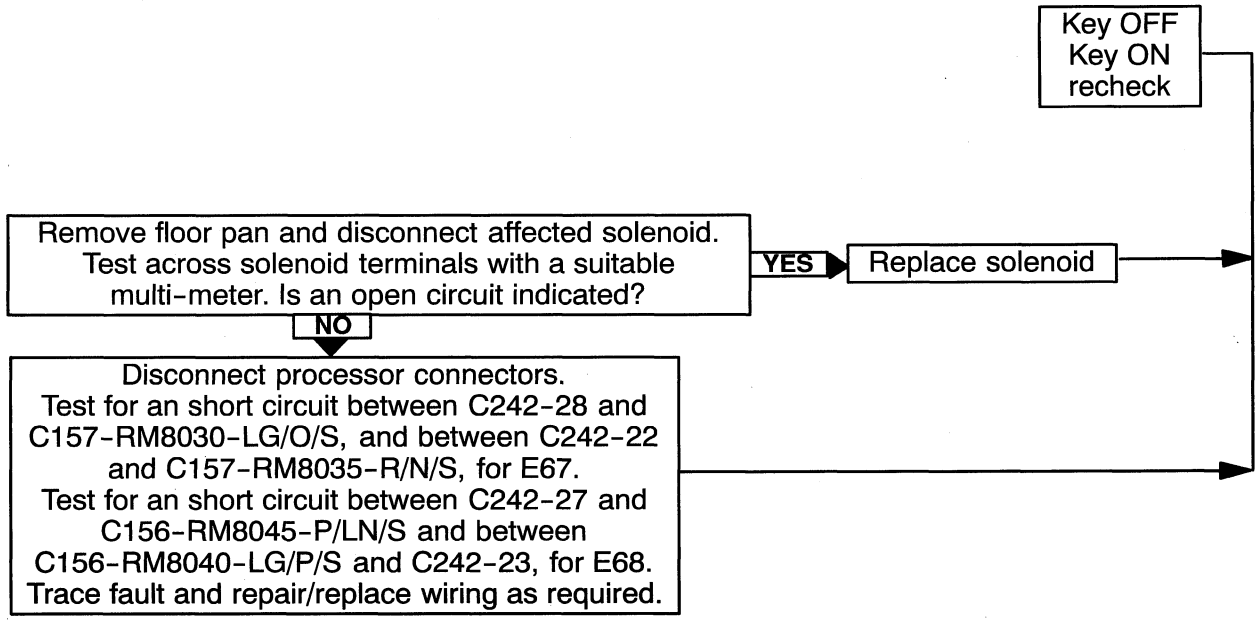

DIAGRAM 35 - ERROR CODES:
E70 - Shuttle lever forward switch voltage too high
E71 - Shuttle lever forward switch voltage too low
EFFECT - Tractor will operate normally, except there will be a short delay recognising that forward has been selected.

Disconnect the transmission/EDC processor connector C242, and disconnect connector, C075 to forward/reverse/neutral switch assembly. Using a suitable multimeter, check between C242-32 & C075-2, (CM7250-S/R). For: (1) Open Circuit (2) Short to earth. Is either condition indicated?

YES → Trace and repair faulty wiring

NO ↓

Reconnect processor connectors. Leave forward/reverse/neutral switch assembly disconnected with key start on. Check for voltage on C075-2 (CM7250-2 S/R). Is +5v, +8v or +12V indicated?

YES ↓

Trace and repair short circuit, using voltage previously indicated to determine possible area of faults.

NO ↓

Reconnect forward/reverse/neutral switch connector if error is still indicated. Inspect connector and check operation of switches with multimeter. If no fault found, substitute module with one of known performance.

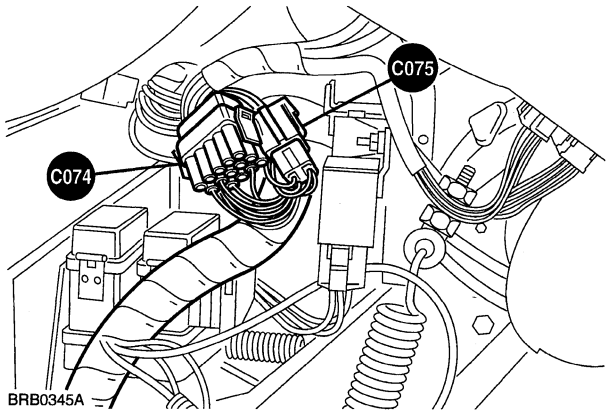

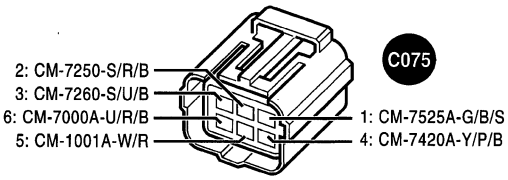

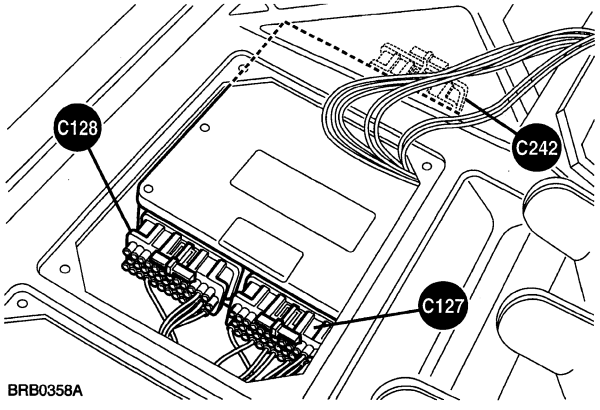

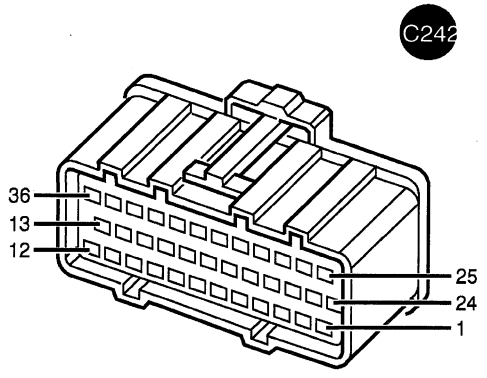

DIAGRAM 36 - ERROR CODES;
E72 - Shuttle lever reverse switch voltage too high
E73 - Shuttle lever reverse switch voltage too low
EFFECT - Tractor will operate normally, except there will be a slight delay recognising that reverse has been selected.

Disconnect transmission/EDC processor connector C242, and disconnect connector, C075 to forward/reverse/neutral switch assembly. Using a suitable multimeter, check between C242-33 & C075-3 (CM7260-S/U). For: (1) Open Circuit (2) Short to earth. Is either condition indicated?

YES ▶ Trace and repair faulty wiring

NO ▼

Reconnect processor connectors. Leave forward/reverse/neutral switch assembly disconnected with key start on. Check for voltage on C075-3 (CM7260-S/U). Is +5v, +8v or +12V indicated?

YES ▼

Trace and repair short circuit, using voltage previously indicated to determine possible area of faults.

NO ▼

Reconnect forward/reverse/neutral switch connector if error is still indicated. Inspect connector and check operation of switches with multimeter. If no fault found, substitute module with one of known performance.

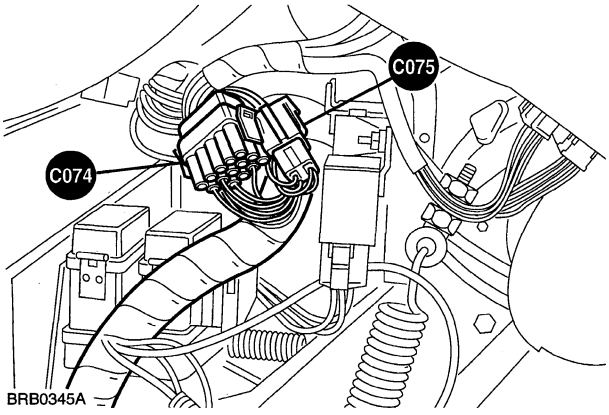

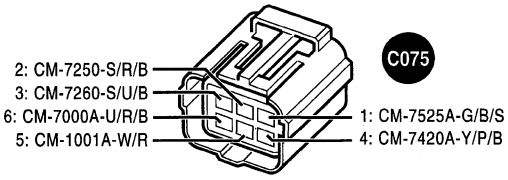

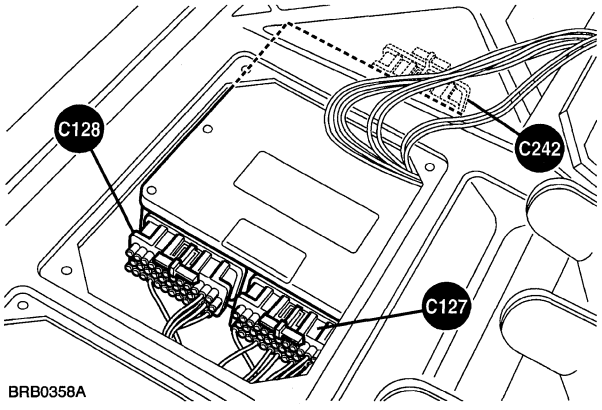

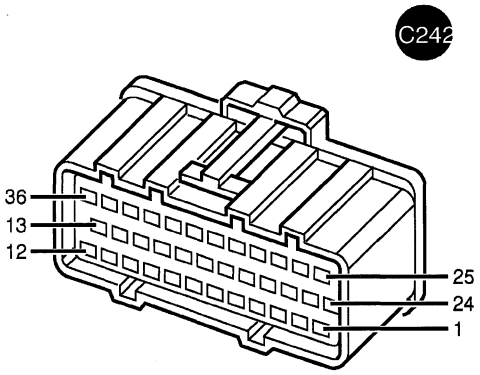

DIAGRAM 37 - Error Code N displayed

Clutchless shuttle operation attempted at too high a speed and in too high a gear

A warning bleeper and symbol 'N' are activated under the following conditions:

- In high range 5-8 gears, shuttling while tractor is still rolling.
- In high range 2-4 gears, shuttling while tractor is rolling faster than 9 Km/h (5.5 mph)

Important: *The clutchless shuttle will still operate under the warning conditions. Clutch damage may occur if the shuttle operation is carried out.*

PRESSURE TESTING

Forward / Reverse Synchroniser

Prepare the tractor for pressure testing:

1. Lift and remove the cab rubber mat and remove the floor pan.
2. Start and run the tractor to warm the transmission oil to a minimum temperature of 20°C (68°F).

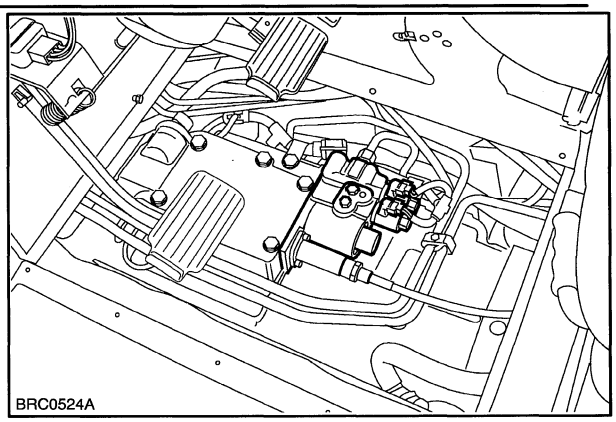

47

3. Obtain suitable pressure gauges, (0-40 bar, 0-600 lbf.in^2), and hoses, Figure 48,

    1. Pressure gauge, FT8503A, with adaptor FT8503-8
    2. Quick release adaptor, Pt No.291924
    3. Adaptor, 297153 (7/16x20 JIC-1/4x18NPSF)
    4. Hose, (Finis Code 3936707)

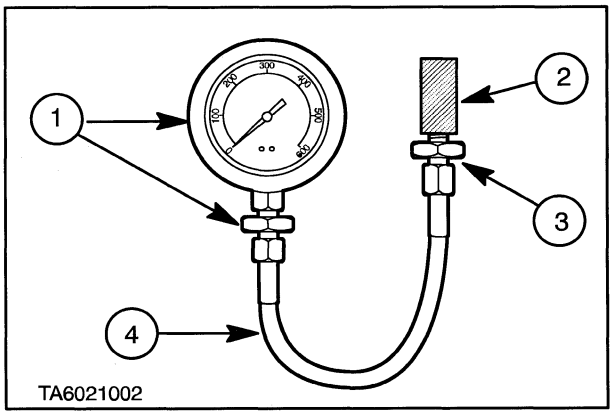

48

4. Install the transmission side quick release couplers (part number 86502603 or special tool No.297240) into the forward (F) and reverse (R) test ports. The test ports have a 7/16 UNF thread.

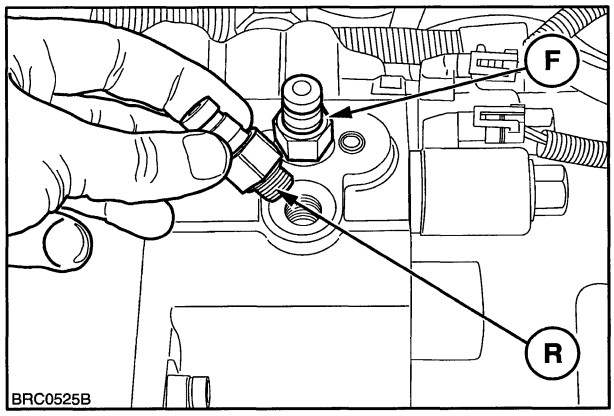

49

5. Install the gauges onto the forward and reverse pressure test port couplers. Figure 49.

NOTE: *Due to the operating characteristics of the synchroniser it is not possible to accurately pressure test the synchroniser operating piston during normal tractor operation. The synchroniser will only take the required pressure to move and then the pressure will be cut. This would be seen only as a momentary blip on a pressure gauge. Therefore the following procedure, using the calibration mode, should be used to determine if full pressure is being achieved.*

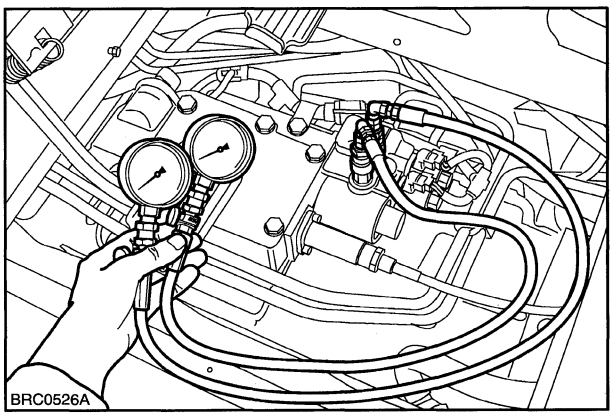

50

Entering the calibration mode :

Press and hold both the upshift and downshift buttons whilst starting the tractor.

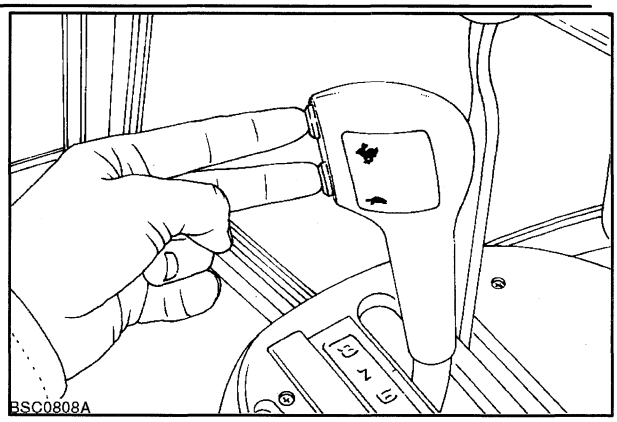

51

Alternative method :

Install diagnostic tool 4FT950 into the Black diagnostic connector, located by the fuse box.

Start the tractor.

Enter mode H1.

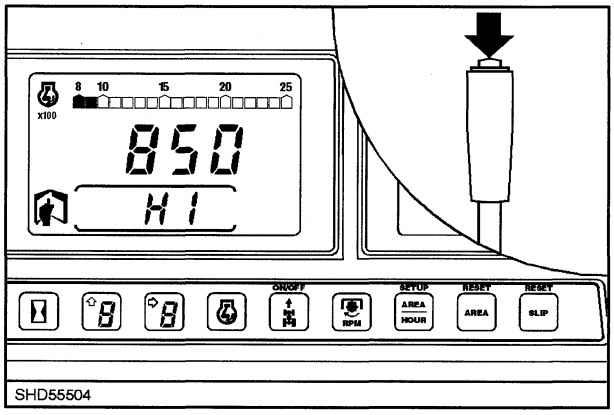

52

The word CAL should appear on the instrument cluster display. This will be replaced after a few seconds by the oil temperature, in degrees Celsius.

Set the engine speed to 1200 +/- 100 rpm.

NOTE: *The engine RPM must be stable with no noticeable surging. If necessary, adjust the throttle position to achieve this, still remaining within the 1200 +/- 100 rpm range.*

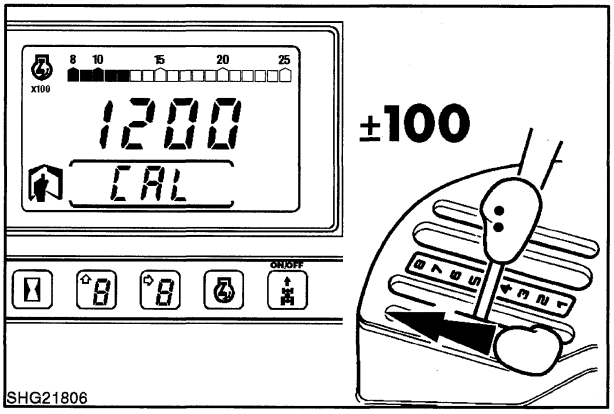

53

Place the two gear levers in the forward position.

NOTE: *No need to use the clutch pedal.*

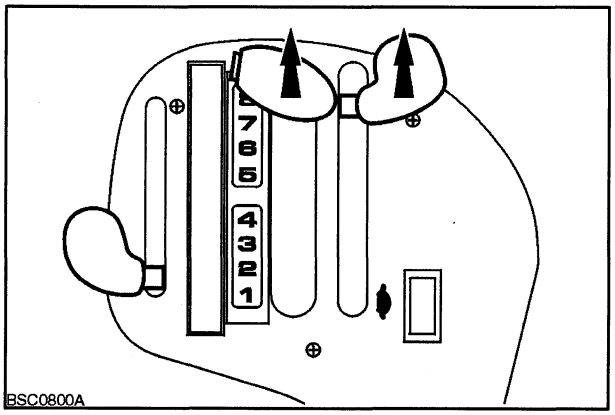

54

Move the shuttle lever into the forward drive position.

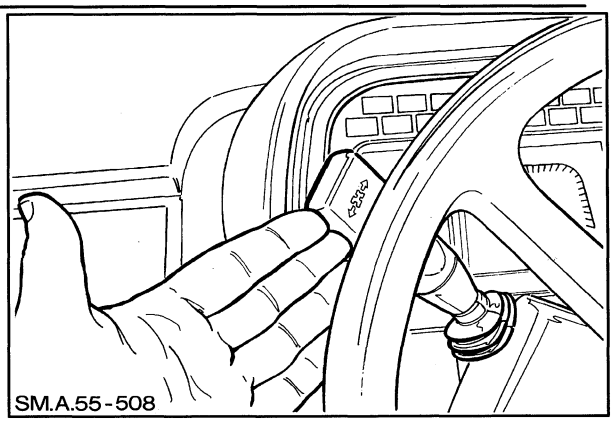

55

Press and hold the upshift and downshift switches, the display will show 'Soc'. Continue to hold the upshift and downshift buttons.

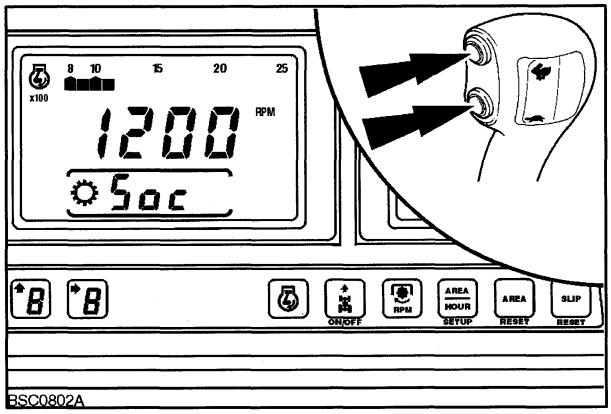

56

The gearshift display will now sequence through figures '1', '2', '3' and '4'. When the display reads 'End', calibration of the transmission synchronisers has been completed, release the upshift and downshift buttons.

The display then returns to CAL then temperature display.

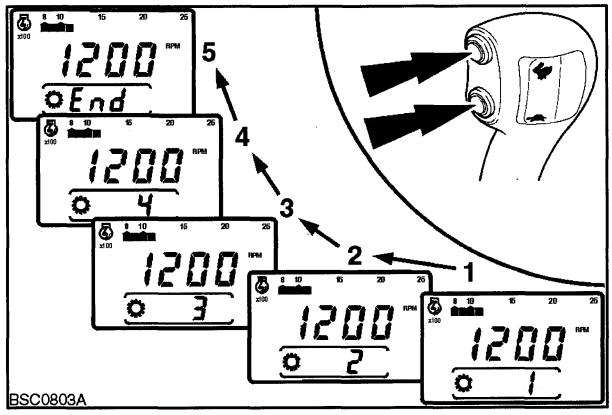

57

The table (Figure 58) shows the synchroniser calibration stages and at what stage pressure can be expected to be seen.

Maximum pressure should be between 18-20bar (260-290lbf.in^2).

Stage	Pressures	
	Forward (F)	Reverse (R)
SOC	YES	NO
1	NO	NO
2	NO	YES
3	4-5 bar	NO
4	YES	NO
END	NO	NO

58

12 x 12 TRANSMISSION

SPECIFICATIONS AND TIGHTENING TORQUE VALUES

Specifications

Lubricant Capacity Transmission/Rear Axle	U.S. Gallons 15 Imp.Gallons 12.5 Litres 56.8
Lubricant	Ambra Multi-G
Gasket Sealant	New Holland Flexible Gasket Sealant Part Numbers, 82995770 (50 ml) 82995771 (300 ml)
Output Shaft End Float	0.001 - 0.003 in (0.0254 - 0.0762 mm)
Shims Available for Output shaft End Bearing Retainer	0.003 in (0.0762 mm) 0.005 in (0.1270 mm) 0.012 in (0.3048 mm) 0.030 in (0.7620 mm)

Gear Ratios 30 Km/hr Transmission		Gear Ratios 40 Km/hr Transmission	
F1	9.61	F1	9.61
F2	6.61	F2	6.56
F3	4.87	F3	4.59
F4	3.16	F4	3.16
F5	4.24	F5	3.83
F6	2.92	F6	2.61
F7	2.15	F7	1.83
F8	1.39	F8	1.26
F9	1.93	F9	1.58
F10	1.32	F10	1.08
F11	0.97	F11	0.76
F12	0.63	F12	0.52
R1	9.37	R1	9.37
R2	6.44	R2	6.40
R3	4.75	R3	4.48
R4	3.08	R4	3.08
R5	4.14	R5	3.73
R6	2.84	R6	2.55
R7	2.09	R7	1.78
R8	1.36	R8	1.23
R9	1.88	R9	1.54
R10	1.29	R10	1.05
R11	0.95	R11	0.74
R12	0.62	R12	0.51

Tightening Torque Values

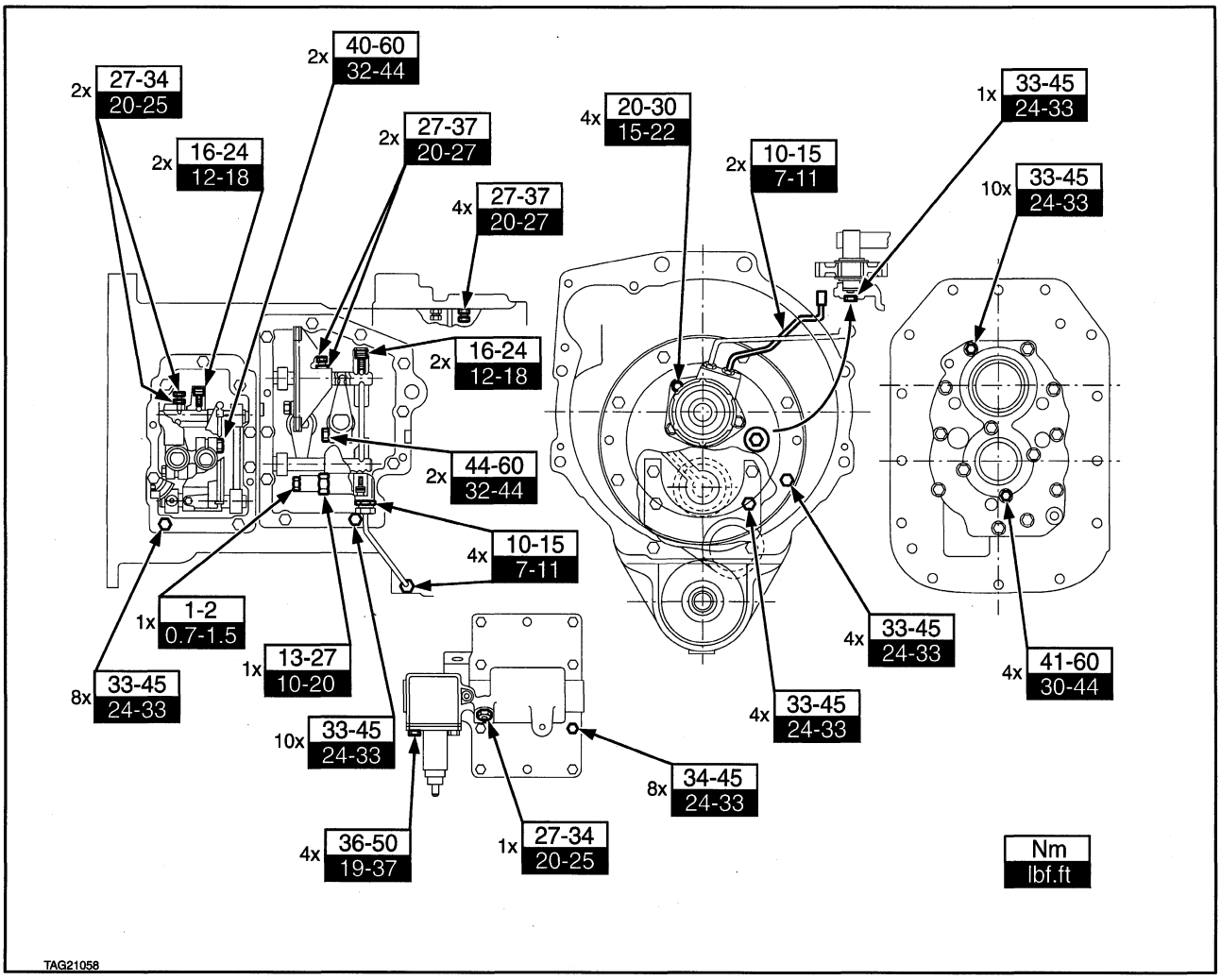

FAULT FINDING

GENERAL

The most important factor to consider in transmission system fault finding is verification of the problem by observing the system operation.

Therefore, if possible, operate the transmission and note the operating characteristics.

PROBLEM	POSSIBLE CAUSES	REMEDY
1. Noisy Gearbox	1. Low oil level	1. Adjust as required
	2. Incorrect oil grade	2. Determine oil grade, drain and refill as necessary
	3. Worn bearings **Note:** Check the pressure lubrication feed to the transmission. Part 8, Chapter 2.	3. End float of output shaft out of specification. Check and replace bearings as required, reset endfloat.
2. Lubricant leak from split pin in transmission case bottom	1. Engine crankshaft rear oil seal/housing gasket leakage	1. Replace rear seal/ gasket. Refer to Part 1 Engine System
	2. Worn or damaged input shaft oil seal, PTO drive shaft seal, transmission front plate gasket, reverse idler bolt seal leakage	2. Inspect and replace seals/gaskets as necessary
	3. Hydraulic release bearing seal leakage (reservoir level requires regular topping up)	3. Replace seals in release bearing assembly
3. Difficult / failure to engage gears	1. Incorrect linkage adjustment or worn linkage	1. Adjust linkage, replace worn parts as required
	2. Damaged linkage	2. Inspect, repair/replace as required
	3. Damaged/worn shift forks	3. Inspect shift forks and rails for wear and distortion. Replace as required.
	4. Worn synchronisers	4. Inspect synchroniser ring rubbing surfaces. Renew as required if worn
	5. Excessive output shaft end float - worn bearings	5. Inspect bearings, replace as required. Reset end float
	6. Incorrect clutch operation	6. Air in hydraulic system, faulty clutch cover plate

PROBLEM	POSSIBLE CAUSES	REMEDY
4. Failure to change between forward and reverse	1. Clutch interlock adjustment incorrect or assembly inoperative	1. Check cable adjustment 2. Inspect cable and lever components.
5. Jumping out of gear	1. Gear not fully engaging 2. Detents in shift covers faulty 3. Worn synchroniser 4. Excessive output shaft end float (bearing wear)	1. Check linkage adjustment 2. Remove shift covers and inspect detent balls and springs 3. Inspect teeth of synchroniser assy. 4. Check bearings and reset end float to specification
6. Holding in gear	1. Worn sliding sleeve/ coupler 2. Locked linkage	1. Inspect and replace as required 2. Adjust linkage and replace worn parts as required.

DESCRIPTION AND OPERATION

GENERAL

The 12x12 transmission provides twelve forward and twelve reverse speeds which are manually selected by three levers. The basic transmission can be specified with the following options:-

1. Four wheel drive (FWD) - consisting of an integral gear, clutch and output arrangement that provides an engageable coupling between the transmission and front axle. This four wheel drive output is available with two ratios to suit different tyre combinations. If two wheel drive is specified the output arrangement is deleted. Four wheel drive will automatically engage when both brakes are applied, providing 4 wheel braking.

2. 40 km/hr option may be specified in place of the standard 30 km/hr.

The transmission provides three selectable ranges. Within each of these ranges a further four ratios may be selected. This in effect provides a three times four (3x4=12) transmission resulting in 12 ratios. All shifts except down shifting into low range are synchronised.

Gear Shift Pattern

F = Forward
N = Neutral
R = Reverse

L = Low Range
M = Medium Range
H = High Range

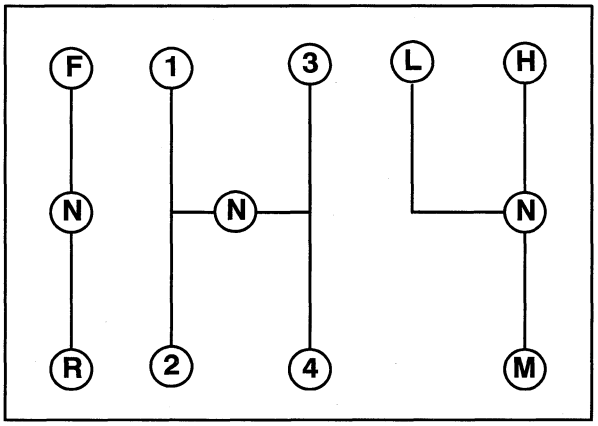

1

The three shift levers shown in Figure 2, control the selection of the 12 forward and 12 reverse ratios. Figure 1 shows the gear shift lever pattern. The main shift lever, reference 4 Figure 2, operates in a conventional H-pattern and, in conjunction with the clutch pedal, is used to select any of four gear ratios, whether the tractor is stationary or moving. The range lever, reference 1, Figure 2, in conjunction with the clutch pedal, is used to select one of three ranges. The shuttle lever (3) is used to select forward or reverse travel when any one of the twelve ratios is engaged, provided that the clutch pedal is depressed.

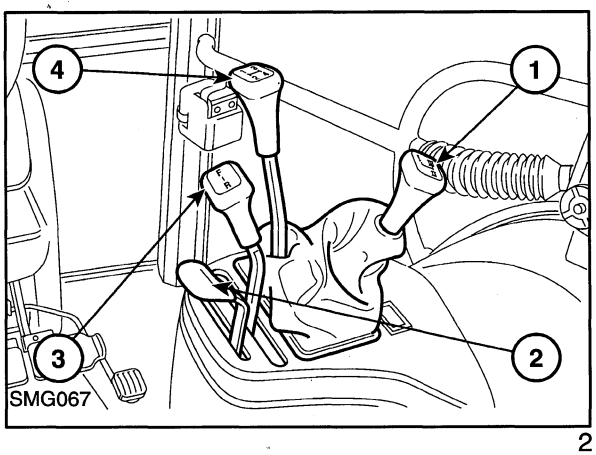

2

NOTE: *An interlock mechanism prevents movement of the shuttle lever, unless the clutch pedal is depressed.*

NOTE: *A neutral start switch prevents operation of the starting motor unless the shuttle (forward/reverse) lever is in neutral.*

Drive is transmitted from the engine to the transmission by a conventional solid centre dry plate clutch assembly.

IMPORTANT: *If it is necessary to tow the tractor, the range lever* ***must*** *be in the neutral position, otherwise damage to transmission components may occur.*

It is permissible to tow start the tractor.

Oil supplied from the power steering motor, via the PTO valve and oil cooler, provides pressure lubrication for the synchronisers, bearings and output shaft. The transmission shares a common oil reservoir with the rear axle.

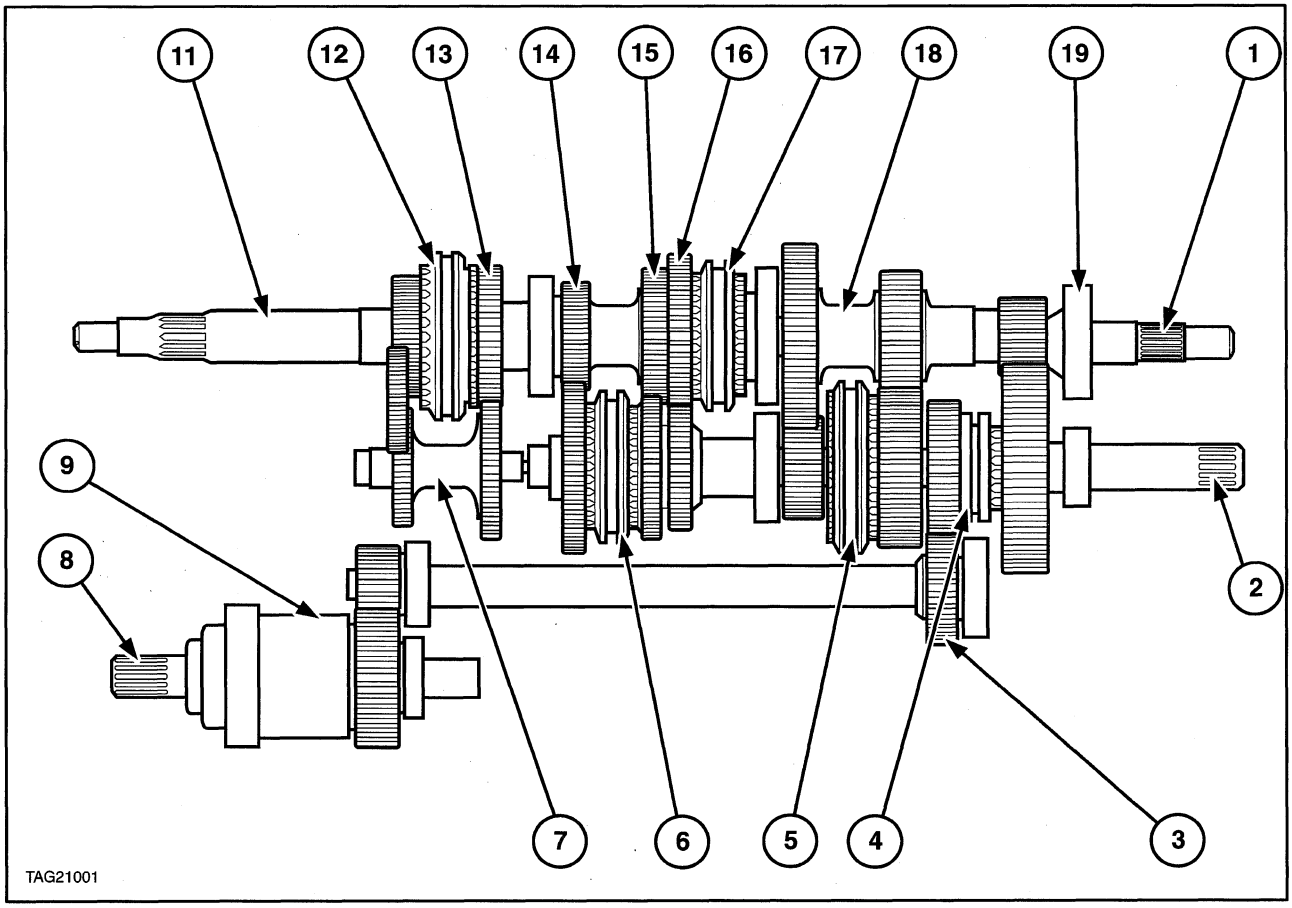

Transmission Assembly 3

1. PTO Shaft
2. Output Shaft
3. Four Wheel Drive Front Axle Drive Shaft
4. Low Range Coupler
5. High and Medium Range Synchroniser
6. First/Second Gear Synchroniser
7. Reverse Gear Cluster
8. Four Wheel Drive Output Shaft
9. Four Wheel Drive Clutch
10. Reverse Gear Idler
11. Input Shaft
12. Forward/Reverse Synchroniser
13. Reverse Gear (free running on shaft)
14. 1st Ratio Gear
15. 2nd Ratio Gear (splined to shaft)
16. 3rd Ratio Gear (free running on shaft)
17. Third/Fourth Gear Synchroniser
18. Range Cluster Gear
19. Range Cluster Shaft Bearing

Gear Identification 12x12 Synchro Command

Gear	Description	Number of teeth	
		40 Kmph	30 kmph
A	Reverse drive gear	33	33
B	Reverse driven gear	39	39
C	1st gear drive	31	27
D	2nd gear drive	38	34
E	3rd gear drive	45	40
F	High range gear drive	52	49
G	Medium range gear drive	35	33
H	Low range gear drive	19	19
J	Low range gear driven	60	60
K	F.W.D internal shaft rear gear	34	34
L	FWD drive gear	38	38
M	Medium range gear driven	44	46
N	High range gear driven	27	31
P	3rd gear driven	34	39
Q	2nd gear driven	41	45
R	1st gear driven	49	52
S	Reverse cluster drive gear	40	40
T	FWD Transfer driven gear	37 or 38	37 or 38
U	FWD Internal shaft front gear	26	26
V	Reverse cluster gear driven	33	33
W	Reverse gear idler	35	35

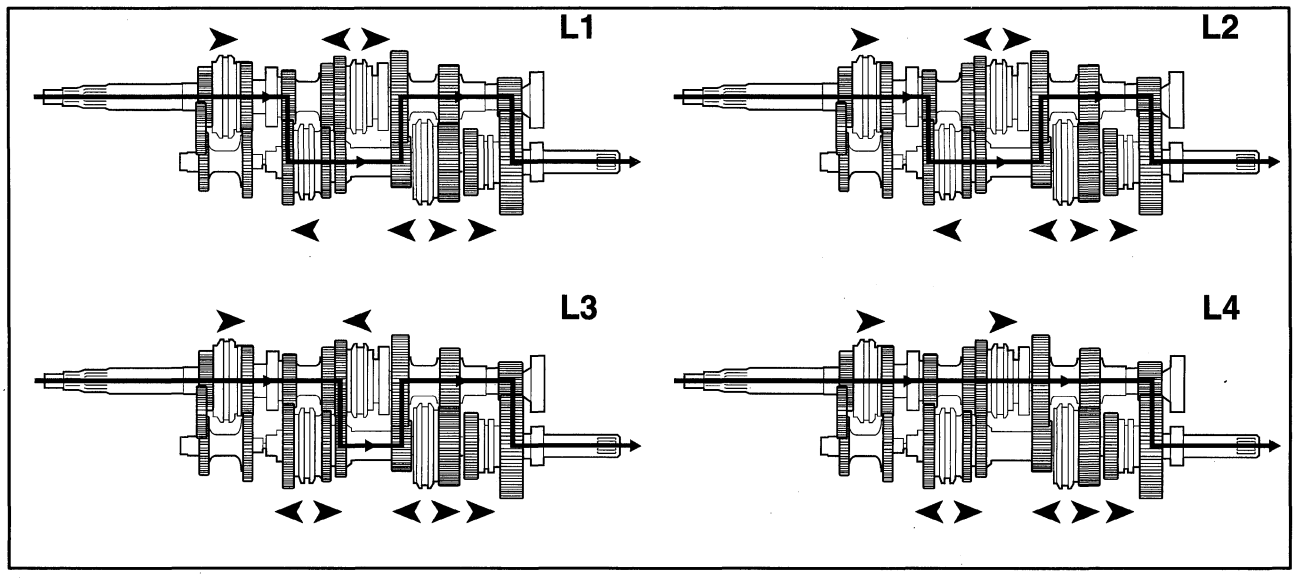

TAG21002

Power Flows Forward Low Range 4

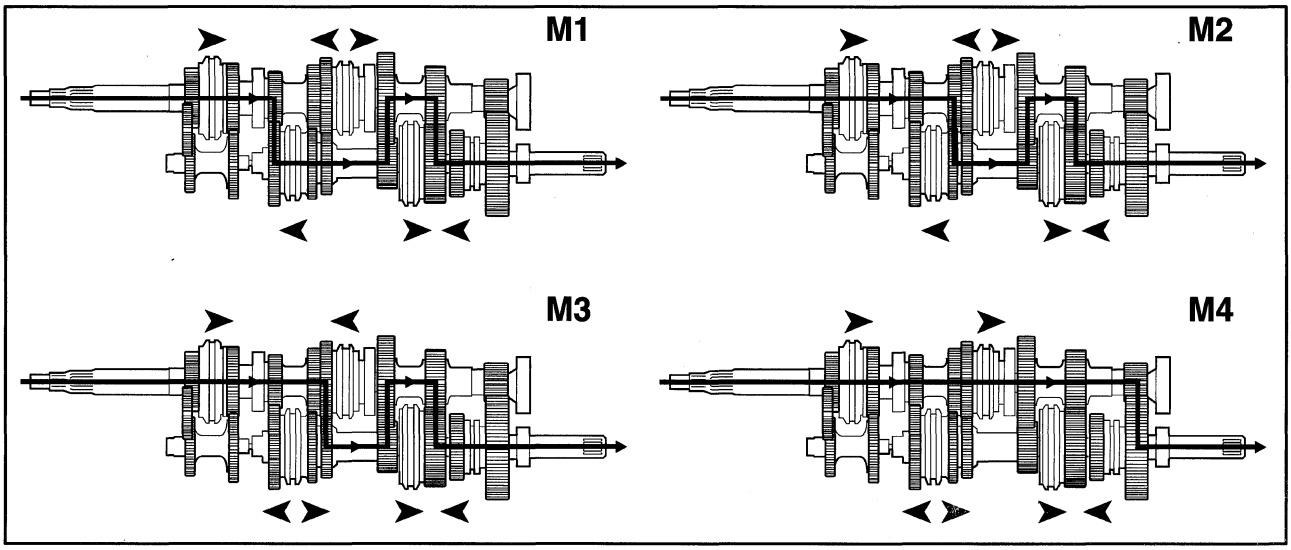

Power Flows Forward Medium Range 5

TAG21003

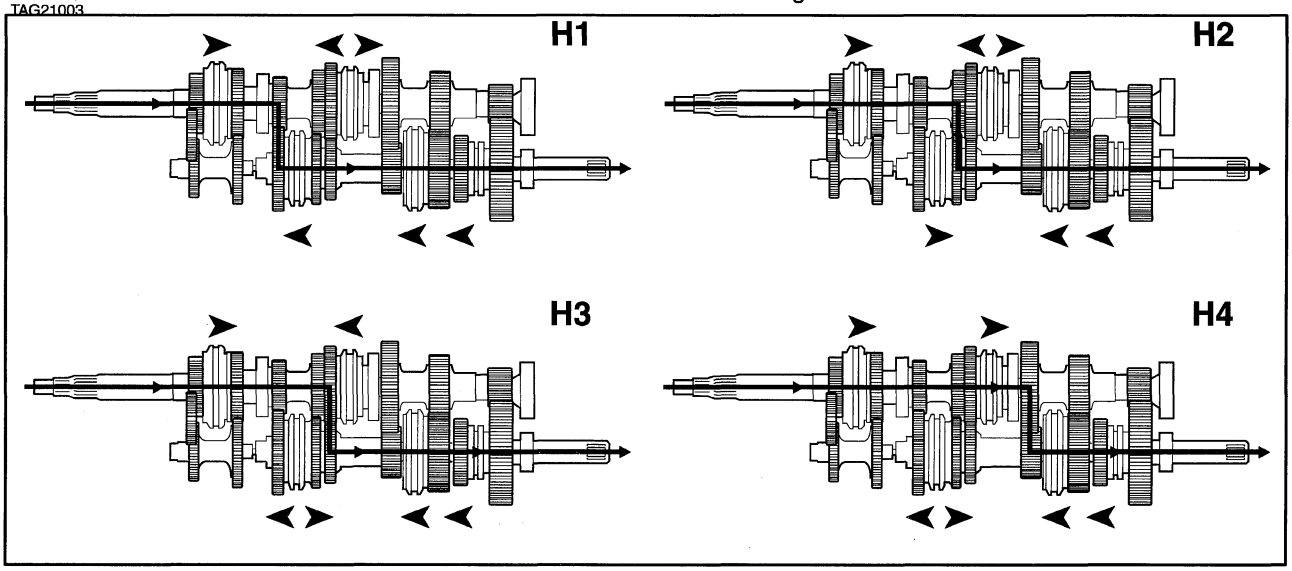

TAG21004

Power Flows Forward High Range 6

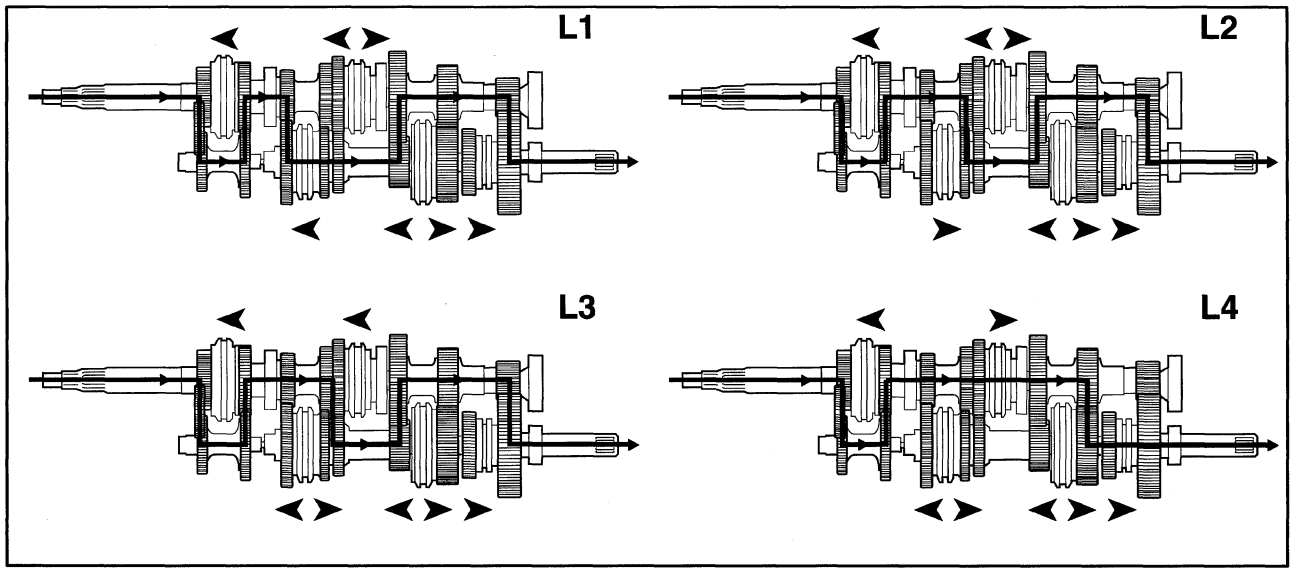

TAG21005

Power Flows Reverse Low Range 7

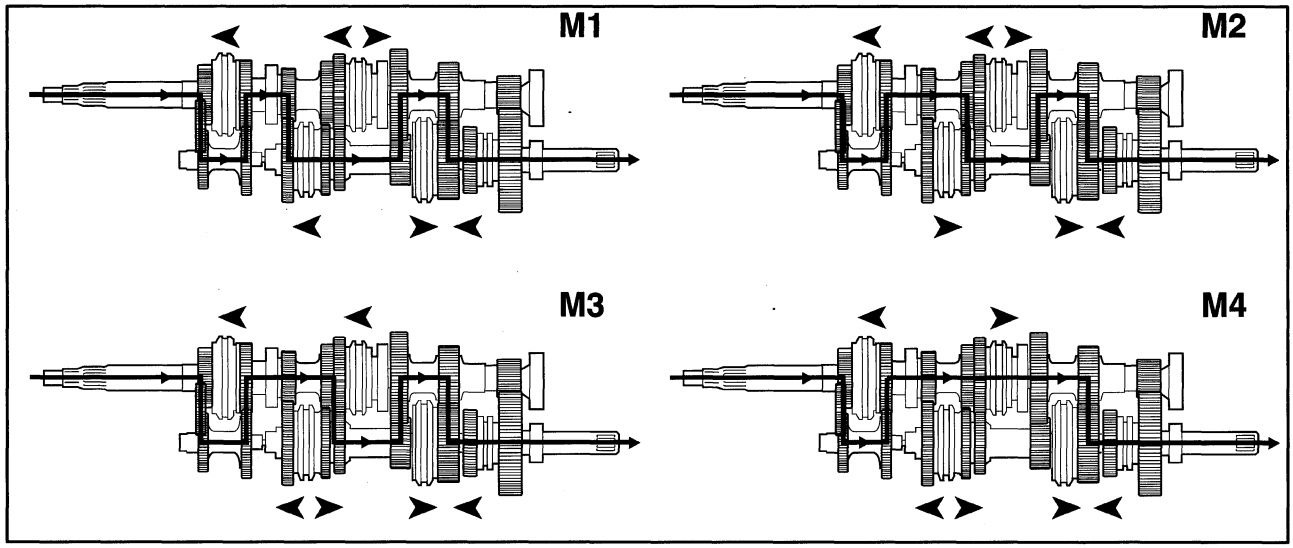

TAG21006

Power Flows Reverse Medium Range 8

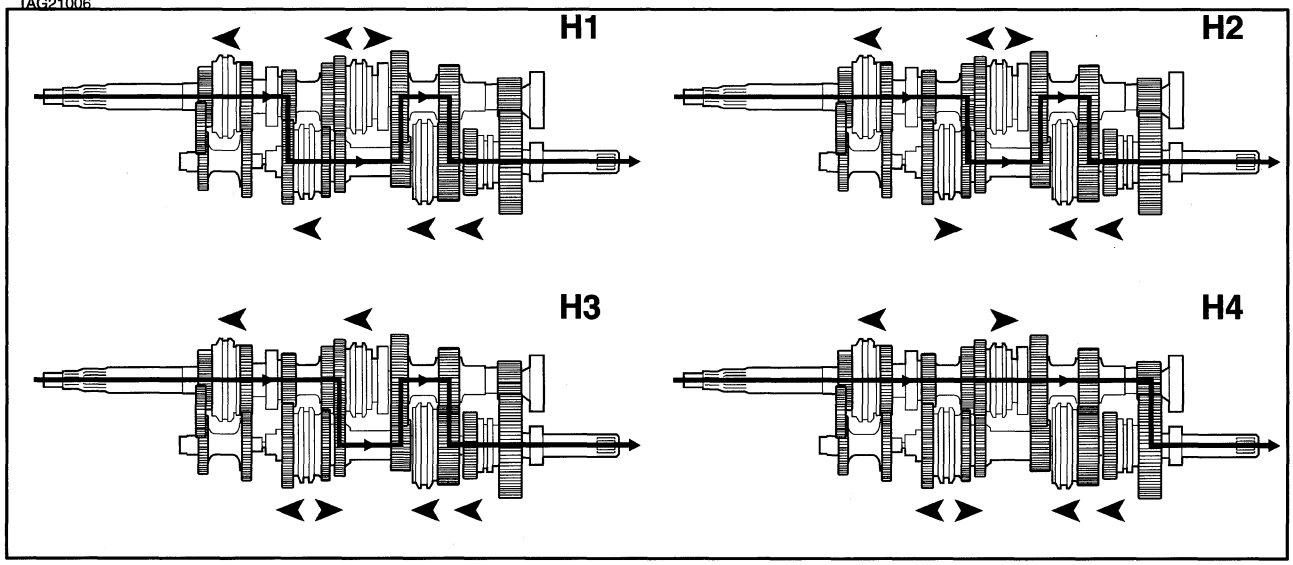

TAG21007

Power Flows Reverse High Range 9

INTRODUCTION TO OVERHAULING THE TRANSMISSION

GENERAL

The arrangements of the procedures in this section permit the servicing of the 12 x 12 transmission with the minimum of disassembly.

The procedures are separated into five groups, detailed below, listing the components serviceable in each group.

GROUP 1 Assemblies Serviced with Transmission Installed. Serviceable Components.

- Gearshift Covers, Including Levers, Forks and Mechanism.
- Neutral Start Switch.
- Four Wheel Drive Output Assembly and Solenoid.
- Clutch Interlock.

GROUP 2 Assemblies Serviced from Transmission Front End, Engine Removed, Transmission Removed - Overhaul.

- Release Bearing Assembly and Hydraulic Tubes
- Front Cover, including Seal and Reverse Idler.
- Input Shaft and bearing
- Forward/Reverse Synchroniser
- Reverse Cluster Gear

GROUP 3 Assemblies Serviced from Transmission Rear End, Rear Axle Removed, Transmission Removed - Overhaul.

- PTO shaft, Bearing and Seal
- High/Medium Range Synchroniser
- Low Range Coupler
- Range Cluster Gear and Bearing
- Output Shaft Assembly

GROUP 4 Assemblies Serviced with Transmission Removed from Tractor - Complete Overhaul. Refer to Section E.

- Mainshaft Assembly, Including 3rd/4th Synchroniser
- Countershaft Assembly, Including 1st/2nd Synchroniser
- Four Wheel Drive Shaft and Bearings

GROUP 5 Component Inspection and Repair (Sub-Assembly Overhaul). Transmission Component - Overhaul.

When servicing the transmission always work in clean surroundings and with clean tools. Thoroughly clean the transmission case to prevent entry of dirt. Use lint free cloths when wiping parts or your hands. Lay cleaned parts out on clean paper so a thorough inspection can be made.

When installing the transmission components, do not use force. If parts do not assemble freely, examine them for the cause of difficulty and coat them with a film of clean petroleum jelly or transmission oil to facilitate assembly. Lubricate all shafts, bearings, oil seals and gears with a film of clean transmission oil before installing them into the transmission.

TRANSMISSION INSTALLED - SERVICEABLE COMPONENTS

Main Shift (Forward) Side Cover

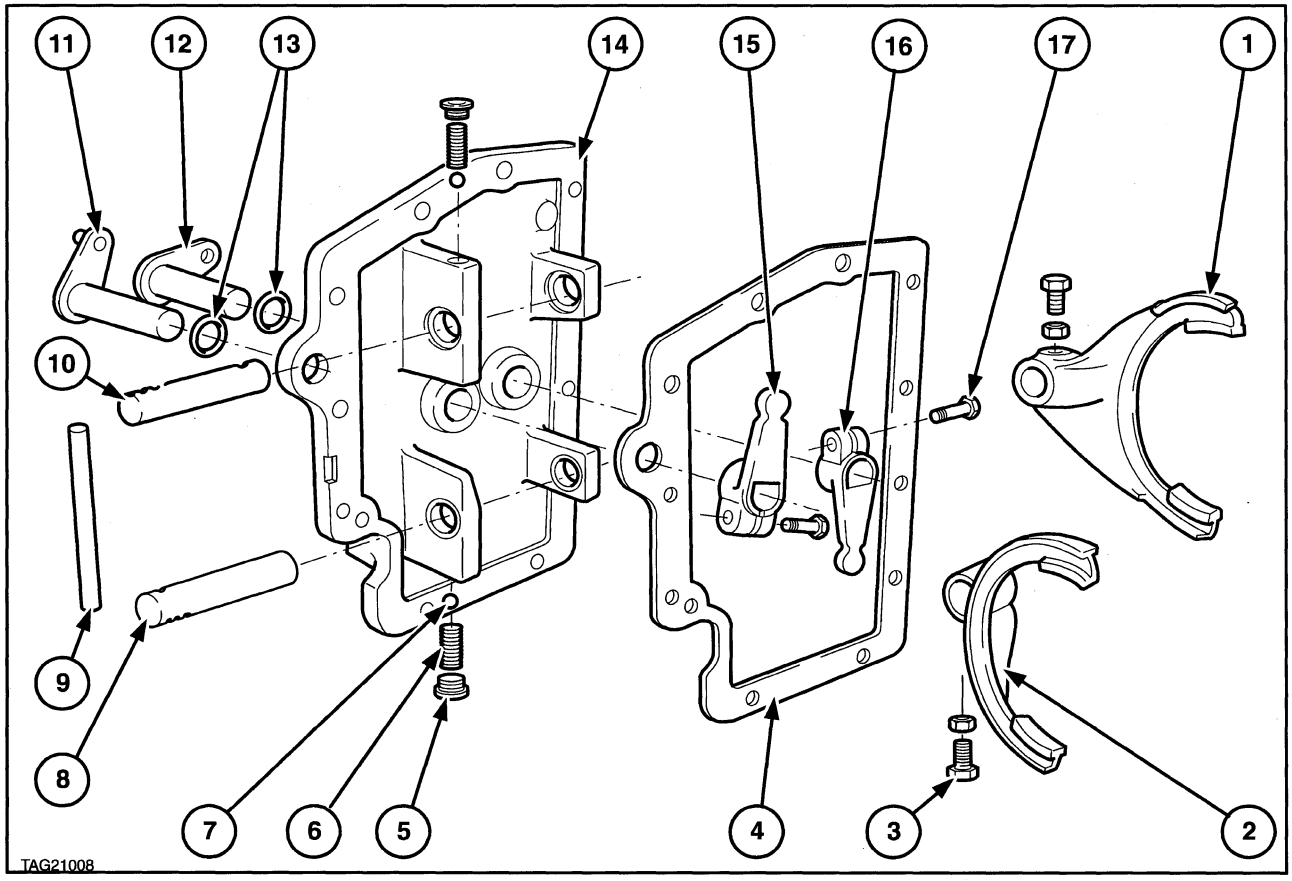

Main Shift (Forward) Side Cover 10

1. 3rd/4th Synchroniser Fork
2. 1st/2nd Synchroniser Fork
3. Fork Locking Bolt
4. Cover Gasket
5. Detent Cap
6. Detent Spring
7. Detent Ball
8. 1st/2nd Synchroniser Fork Shaft
9. Interlock Pin
10. 3rd/4th Synchroniser Fork Shaft
11. 3rd/4th Shaft and Lever Assy.
12. 1st/2nd Shaft and Lever Assy.
13. Cover Oil Seals
14. Cover Body
15. 3rd/4th Shaft Lever
16. 1st/2nd Shaft Lever
17. Locking Bolt

Disassembly (Refer to Figure 10)

1. Remove the interlock cap, spring and ball and remove the pin.
2. Remove one of the lever locking bolts. Punch the lever shaft out of the cover and remove the lever.
3. Remove the corresponding fork locking bolt, slide out the shaft and remove the fork.
4. Repeat the above operations on the other fork assembly.

Inspection

1. Inspect and if necessary, install new seals into the cover bores, lubricate seals with grease.
2. Inspect fork ends, shafts and levers for wear and damage replacing components as required.

Assembly

1. Assembly of the cover is the reversal of the disassembly.

Range Shift (Rear) Side Cover

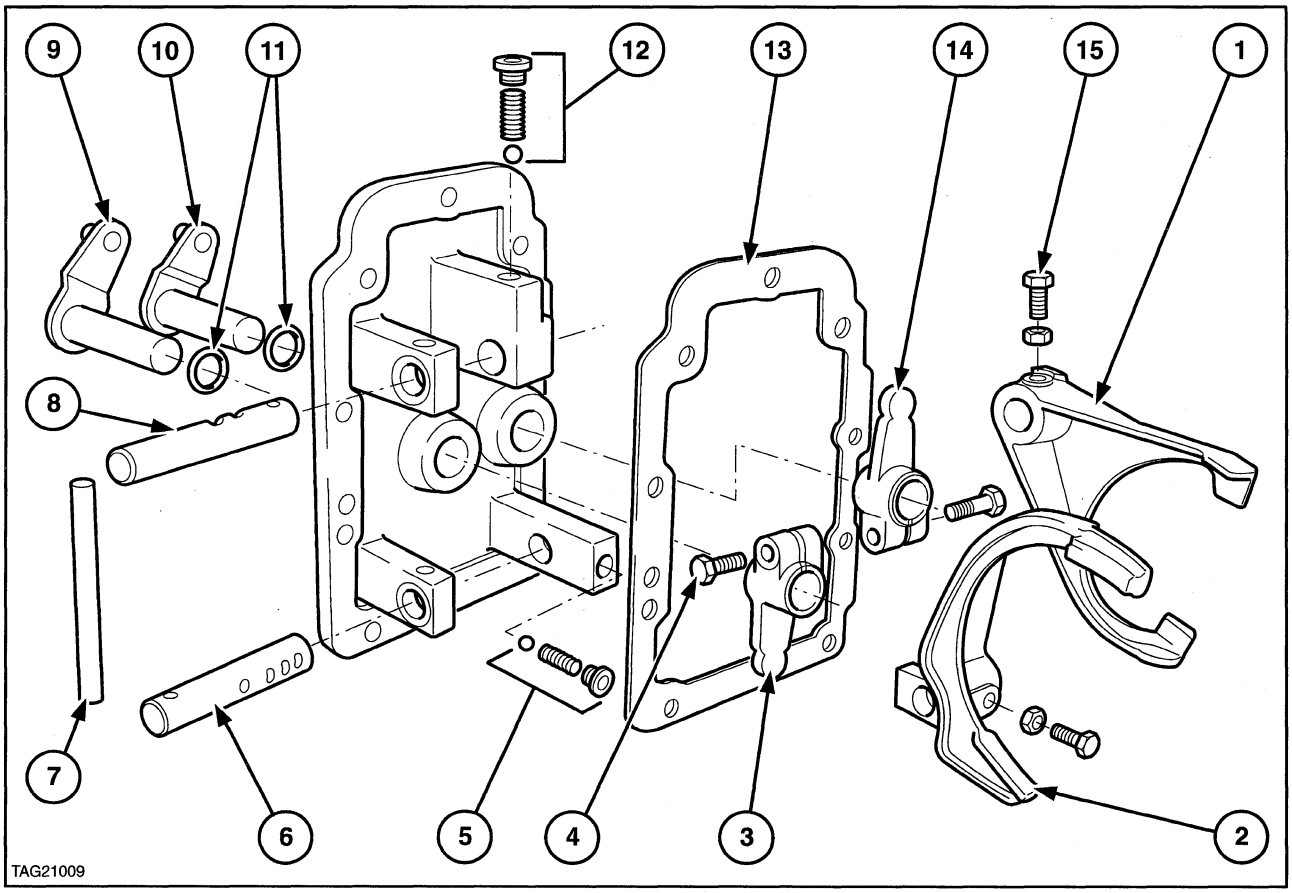

Range Shift (Rear) Side Cover 11

1. Low Range Coupler Fork
2. Hi/Med. Synchroniser Fork
3. Hi/Med. Shaft Lever
4. Lever Locking Bolt
5. Hi/Med. Detent Assembly
6. Hi/Med. Shaft
7. Interlock Pin
8. Low Range Coupler Shaft
9. Hi/Med. Shaft and Lever Assy
10. Low Coupler Shaft and Lever Assembly
11. Cover Oil Seals
12. Low Coupler Detent Assembly
13. Cover Gasket
14. Low Coupler Shaft Lever
15. Fork Locking Bolt

Disassembly (Refer to Figure 11)

1. Remove the detent plug, followed by the ball and spring for the low range fork, from the cover detent bore.
2. Remove the low range fork locking bolt. Slide out the rail and remove fork.
3. Remove interlock pin.
4. Remove the detent plug, ball and spring from the Hi-Med. fork cover detent bore.
5. Remove the locking bolt from the fork and slide out the rail. Remove the fork.
6. To remove the levers remove the locking bolts and punch the shafts out of the cover assembly. Remove levers from cover.

Inspection

1. Inspect and if necessary install new seals into bores of cover assembly. Lubricate seals with grease.
2. Inspect fork ends, shafts and levers for wear and damage, replace components as required.

Assembly

1. Assembly of the cover is the reversal of the disassembly.

Top Cover

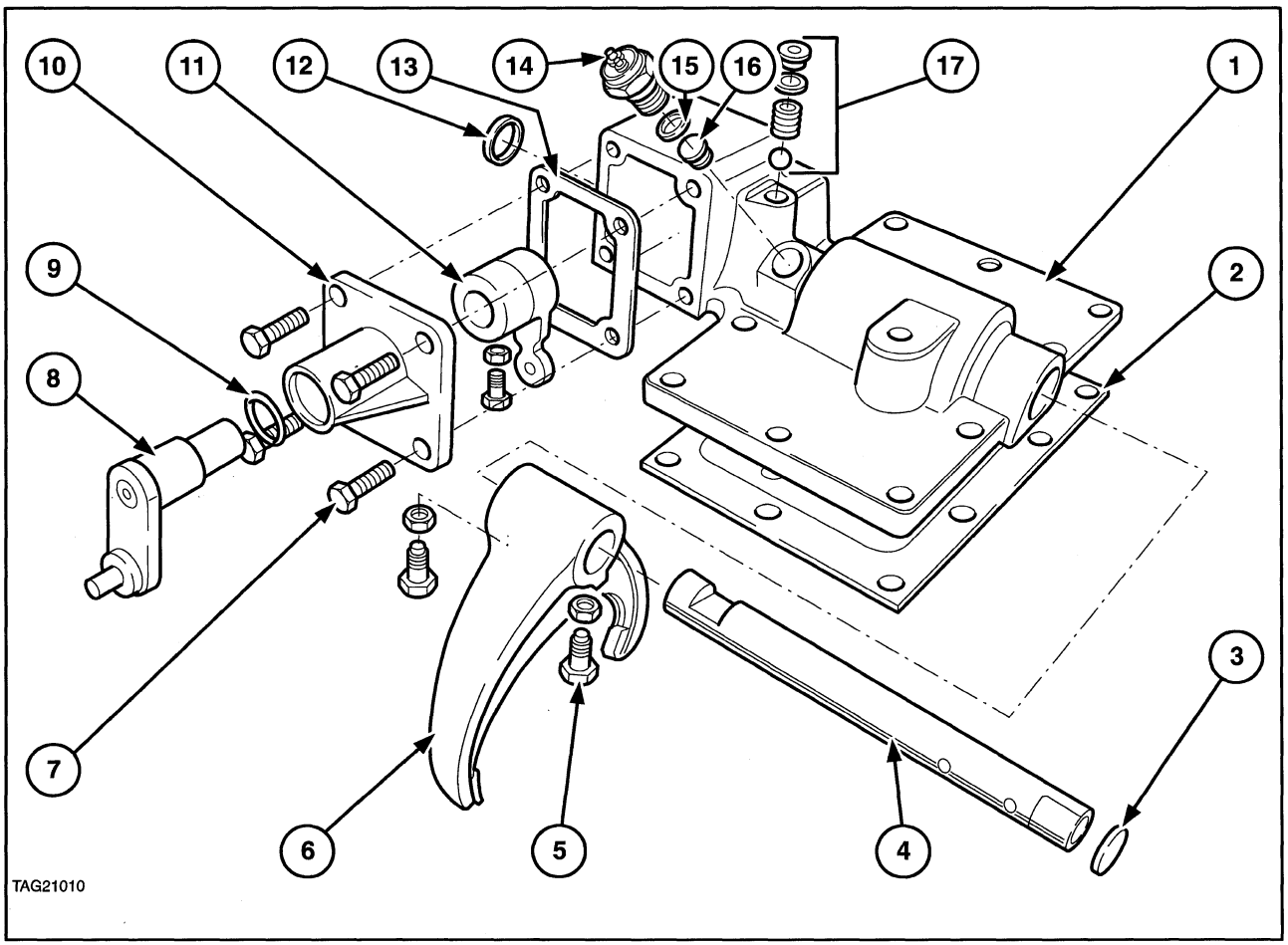

Top Cover 12

1. Top Cover Body
2. Gasket
3. End Plug
4. Fork Shaft
5. Fork Locking Bolt
6. Fork
7. Housing Retaining Bolt
8. Operating Shaft Assembly
9. Housing Seal
10. Operating Shaft/Lever Housing
11. Operating Lever
12. Cover Body End Plug
13. Housing Gasket
14. Neutral Start Switch
15. Seal
16. Plunger
17. Detent Assembly

Disassembly (Refer to Figure 12)

1. Remove the detent plug, followed by ball and spring.
2. Remove the neutral start switch and operating plunger.
3. Remove the housing cover assembly.
4. Remove the lever locking bolt and remove the lever from the shaft.
5. Using a suitable drift, punch the rail end plug into the housing of the cover.
6. Remove the fork locking bolts, and through the bore of the removed plug punch out the rail and remove the fork.

Inspection

1. Inspect the seals and replace where necessary.
2. Inspect the fork, levers and shaft for wear and damage, replace components as required.

Assembly

1. Assembly of the cover is the reversal of the disassembly.

Gear Shift Levers and Linkage

WARNING: *The bracket assembly is heavy. Either obtain assistance or use suitable lifting equipment to aid removal.*

Removal - Less Cab

1. Remove the knobs from the levers.
2. Remove the trim from around the top of the linkage.
3. Remove the locking screws from the main shift and range levers, tap out the lever pivot pins and remove the levers.
4. Remove the snap ring retaining the forward/reverse lever and remove lever.
5. Disconnect the throttle pedal and remove the platform securing bolts, Figure 13 and slightly raise the platform.
6. Disconnect the links between the bracket assembly and the transmission.

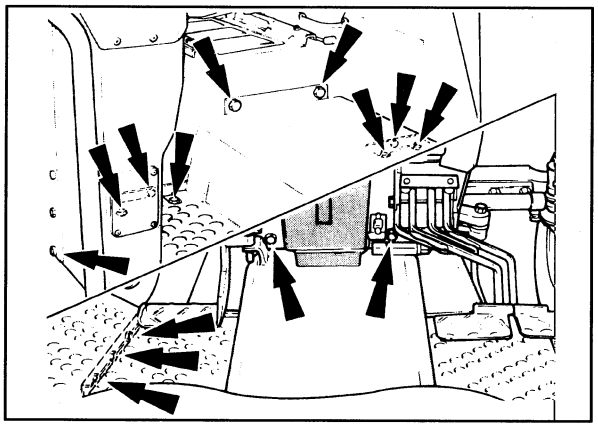

13

7. Remove the five bolts securing the bracket assembly to the transmission casing, Figure 14. Carefully remove the assembly. It may be necessary to raise or lower the platform during the removal procedure.

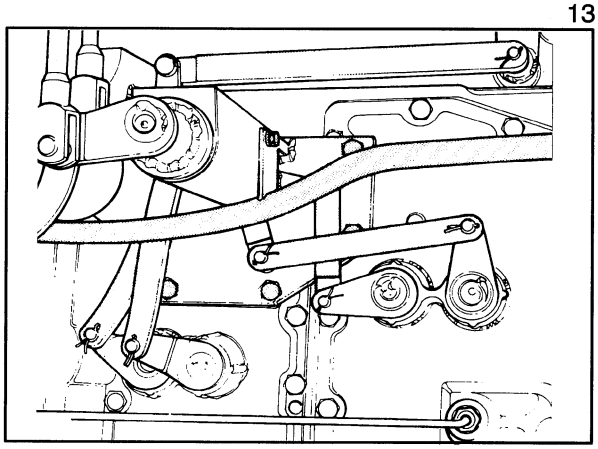

14

Removal - With Cab

1. Remove the knobs from the levers.
2. Remove the trim from around the top of the linkage.
3. Remove the locking bolts from the main shift and range levers and tap out the lever pivot pins.
4. Remove the protective rubber boot and disconnect the links between the bracket assembly and the transmission.
5. Remove the five bolts securing the bracket assembly to the transmission casing. Carefully remove the assembly.

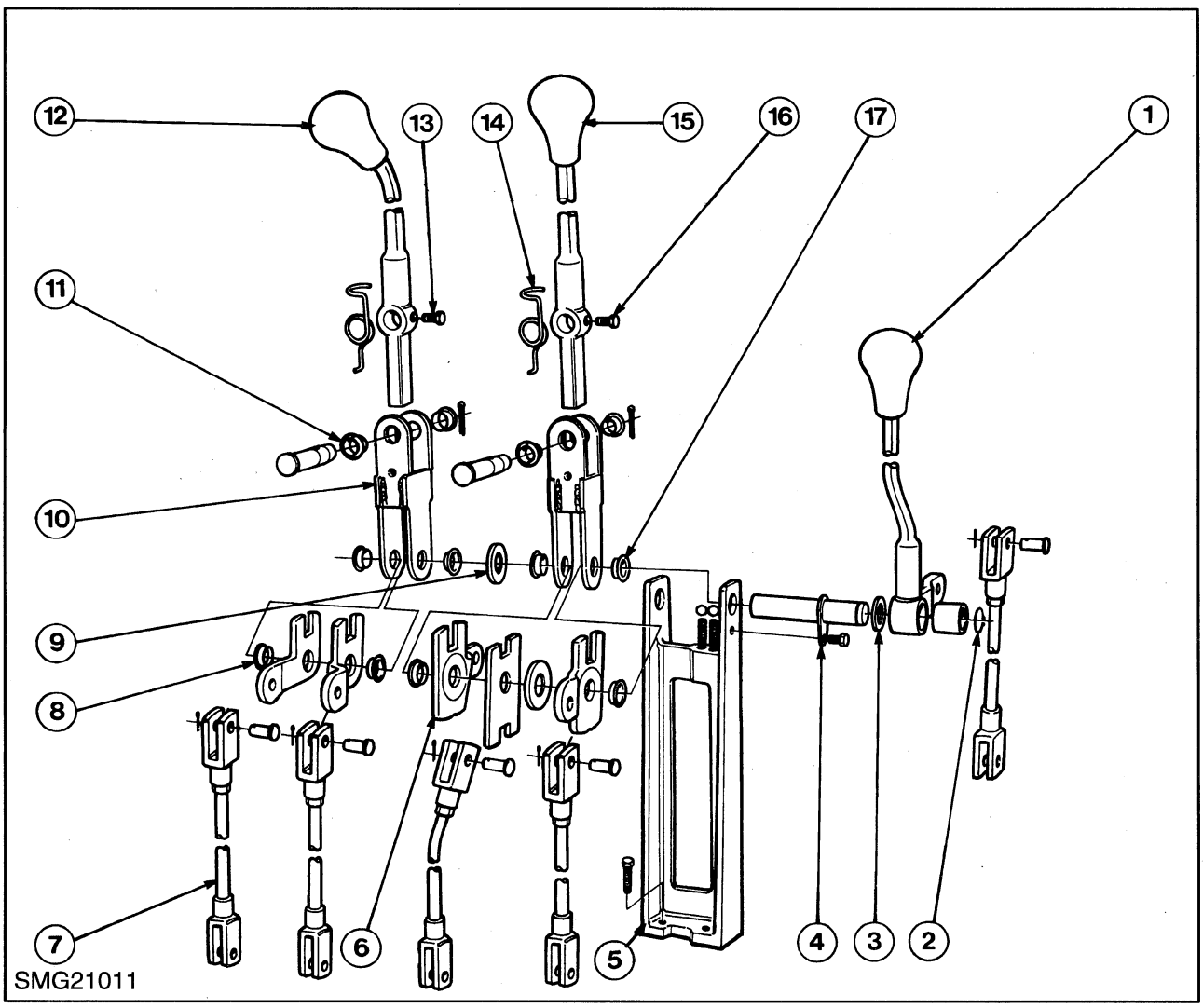

Gear Lever Linkage - Top End 15

1. Forward/Reverse Lever
2. Snap Ring
3. Nylon Washer
4. Pivot Bracket Shaft
5. Support Assembly
6. Operating arm
7. Operating Rod
8. Operating Arm Bush - 4 off
9. Nylon Washer
10. Pivot Bracket
11. Pivot Bracket Top Bush - 4 off
12. Range Lever
13. Locking Screw
14. Lever Return Spring
15. Main Shift Lever
16. Locking Screw
17. Pivot Bracket Lower Bushes - 4 off

Disassembly

1. Remove the rods located between the lower bracket assembly and the upper arms. Note their positions for re-assembly.

2. Remove the support assembly, reference 5, Figure 15, by removing the 4 securing bolts.

3. The operating arms and pivot bracket may be removed by withdrawing the shaft, reference 4, Figure 15, secured by a single bolt.

4. Removal of the bushes from the pivot bracket will allow the operating arms to be removed.

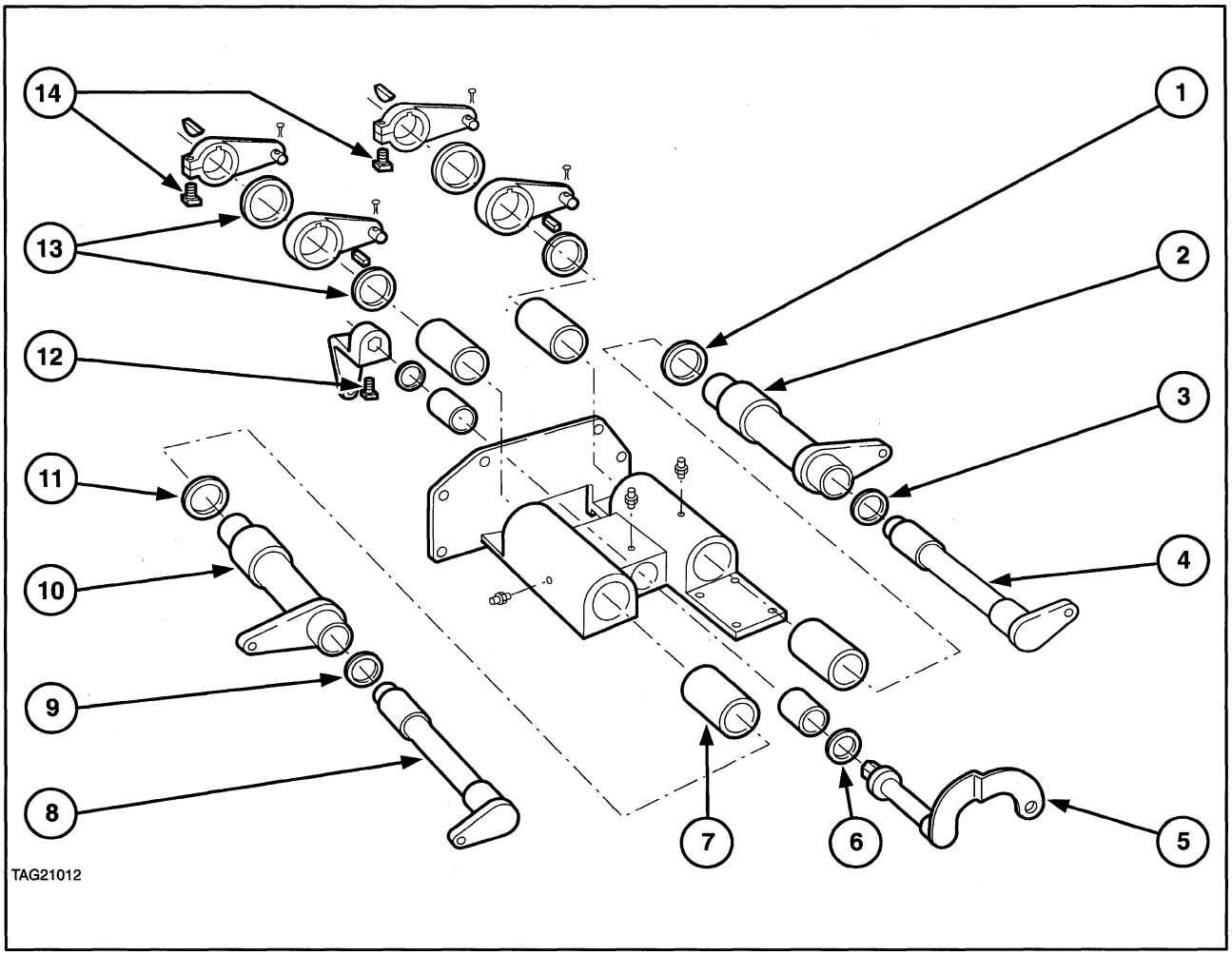

16

Gear Lever Linkage - Bracket Assembly
(Shown off the vehicle and upside down for clarity)

1. Nylon Washer
2. Outer Shaft (Hi-Med. Range)
3. Nylon Washer
4. Inner Shaft (Low Coupler)
5. Centre Shaft
6. Nylon Washer (Forward/Reverse)
7. Bushing
8. Inner Shaft (1st/2nd Ratio)
9. Nylon Washer
10. Outer Shaft (3rd/4th Ratio)
11. Nylon Washer
12. Locking Screw
13. Nylon Washer
14. Locking Screw

1. Remove locking screws reference 14, Figure 16.

2. Remove the shaft assemblies references 2 and 10, Figure 16.

3. Withdraw the inner shaft from the outer shaft.

4. Remove the locking screw reference 12, Figure 16, from the centre shaft operating arm and withdraw the shaft.

Inspection And Repair

1. Inspect the bushes, shafts and clevis pins, if wear is evident or there is excessive play between components, renew parts as necessary.
2. Ensure that the grease fittings and the bracket channels are free of blockages to allow correct lubrication.

Assembly

1. Assemble using the reverse of the disassembly procedure. Smear some grease onto the shafts and bushes as they are being assembled.

Installation

1. Replace the assembled bracket and linkage to the tractor, using the reverse of the removal procedure.
2. It will be necessary after disassembly to check that the linkages are correctly adjusted. Linkage adjustment should be conducted with all transmission shift levers in neutral. Correct adjustment is when all the operating arms are in the vertical position and are perfectly aligned, Figure 17 (1).

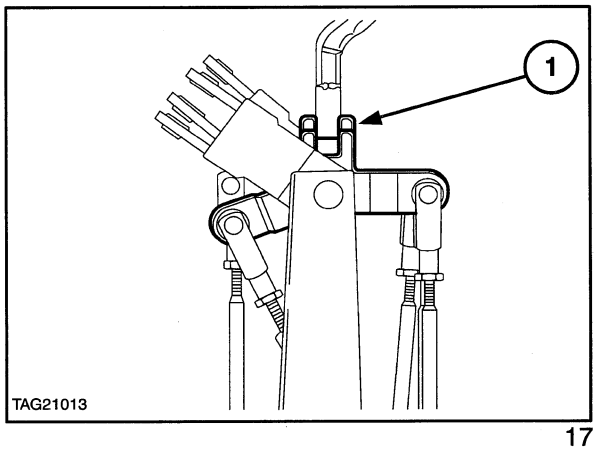

17

3. To adjust, disconnect the relevant link from the transmission, this allows access to the clevis pin which must be removed to allow the clevis to be rotated, Figure 18.
4. Check operation of the levers after adjustment.

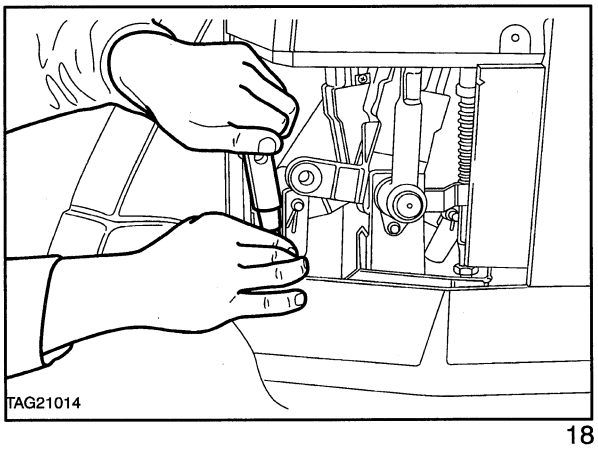

18

Neutral Start Switch Inspection

1. Inspect the conical ends of the switch plunger for nicks and burrs. If either of these cannot be removed by polishing, install a new plunger.
2. Check the switch (1) operation by connecting to a suitable lamp (2) and battery (3) as shown in Figure 19.
3. Operating the switch should illuminate the lamp with the ball depressed and extinquish when released. Replace switch if operation is faulty.

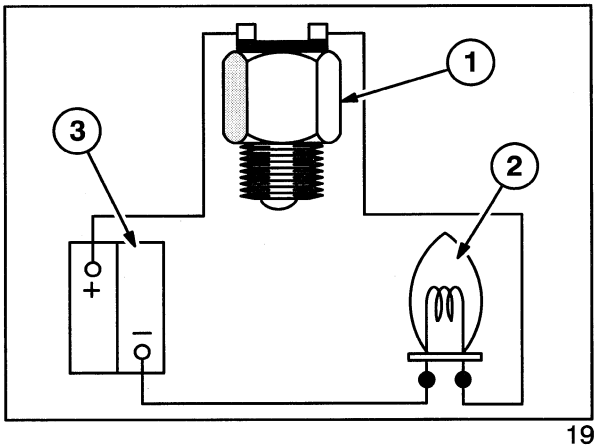

19

Clutch Interlock

An interlock mechanism is provided on the transmission top cover to prevent shifts between forward and reverse travel, unless the clutch pedal is depressed.

The interlock mechanism consists of a control cable, which is connected at one end to the clutch pedal assembly (1) and the other to the transmission top cover (2) through a bore in the housing, Figure 20.

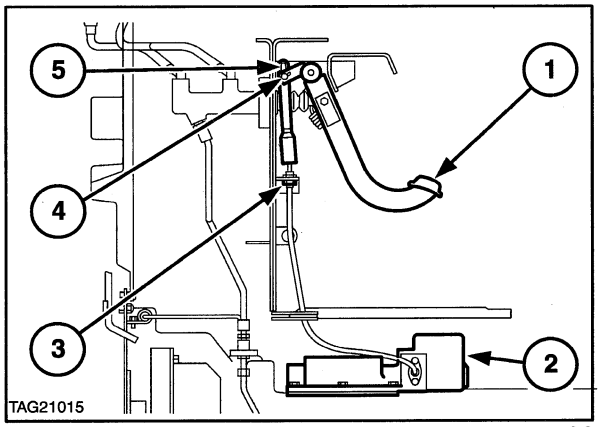

20

A plunger, connected to the control cable, engages with a slot in the forward/reverse rail to prevent rail movement. When the clutch pedal is depressed the plunger is moved free of the slot to allow shifting.

Adjustment

1. To ensure correct operation of the interlock, adjust the cable using the adjusting nuts (3), so that the pin (4) in the clutch pedal lever contacts the upper end of the cable slot (5) and provides 6-8mm of cable movement at the end of the pedal stroke.

Front Wheel Drive Output Assembly - Disassembly

1. Remove the front cover plate by gently bumping the output shaft to free the front cover from the bearing.

2. Remove the front bearing snap ring, reference 7 in Figure 26, and using Tool numbers 951 or 9190 (1) and 1002 or 9198 (2) with a suitable shaft protector (4), pull off the front bearing (3), Figure 21.

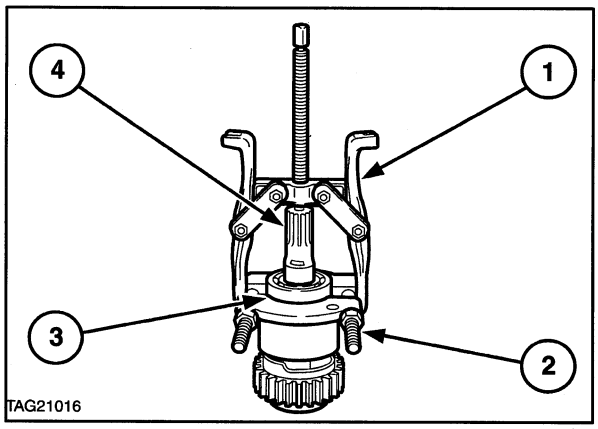

21

3. Lift off the spring keeper (4) and engagement spring assembly (5) and slide the front half of the clutch (3) from the shaft (1) and rear clutch half (2), Figure 22.

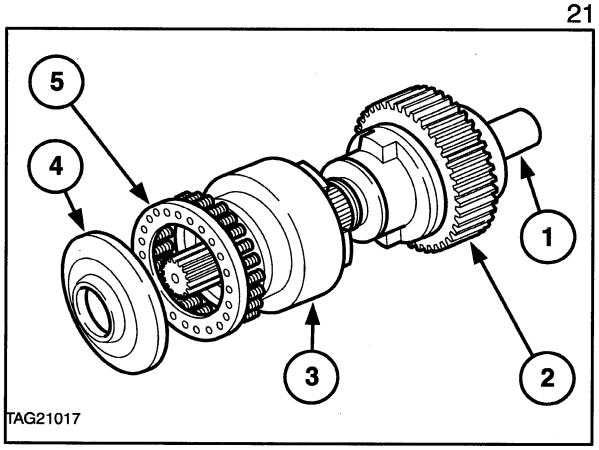

22

4. Remove the rear bearing snap ring, reference 21 in Figure 26, and using Tool numbers FNH09190 or FNH09198 (2) with a suitable shaft protector (4) pull off the rear bearing (3) reference 3, Figure 23.

5. Remove the gear/rear half of the clutch and collect the two bearings, references 15 and 17 with the two spacer washers references 16 and 19 in the exploded view of the FWD transfer output shaft assembly shown in Figure 26.

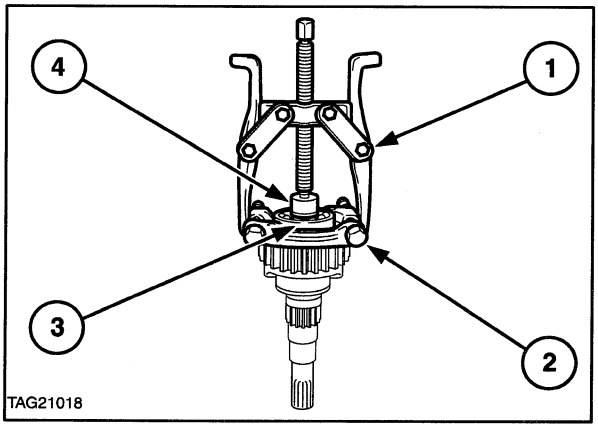

23

6. The oil transfer tube supplies pressure oil to the FWD clutch. This transfer tube is a tight fit in the transmission housing. It should be removed and the polyamide thrust seal renewed. Remove the tube (3) by threading an M10-1.5 bolt into the centre of the tube and using a conventional slide hammer and suitable adapter, withdraw the tube, Figure 24. Alternatively use Tool No. FNH00873 (1) with slide hammer, part of Tool No. FNH09527 (2).

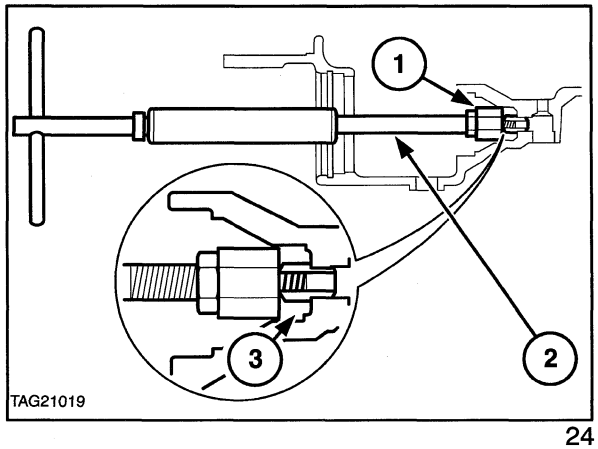

24

Front Wheel Drive Output Assembly - Inspection

Use the sectional view in Figure 27 to aid component identification.

1. Inspect all snap rings and their grooves for deformation and damage.
2. Inspect the internal drive shaft gear, the shaft front gear and the gear on the clutch half, examining the teeth for wear or pitting.
3. Carefully inspect all bearings for wear, pitting and damage.
4. Install new inner and outer seals, references 13 and 25, Figure 27, to the output shaft.
5. Carefully prise out the output shaft lip seal, reference 19, Figure 27, from the cover plate and press in a new seal using a suitable step plate or adaptor. Renew the outer 'O' ring seal.
6. Inspect the clutch engagement spring assembly for cracked coils or deformation. Check the spring assembly loaded height as shown in Figure 25, or by comparing it with a new reference. If any doubt exists renew the spring assembly.

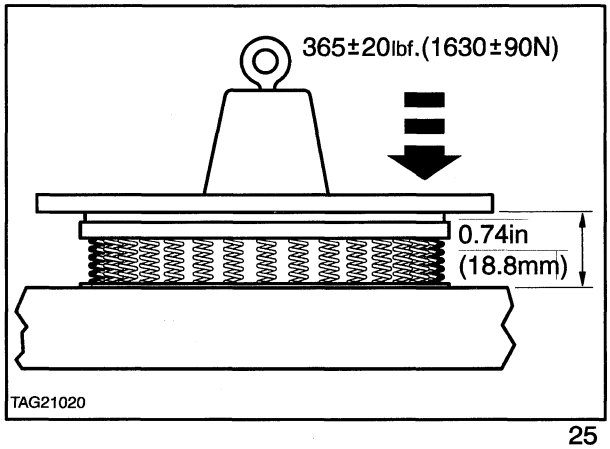

25

7. Inspect the inner surfaces of the front half of the clutch for damage, ensure that the sealing area is unmarked.
8. Examine the clutch dog teeth for damage and wear.
9. Inspect the splined areas of the front half of the clutch, the output shaft and the internal drive shaft for damage and fretting.

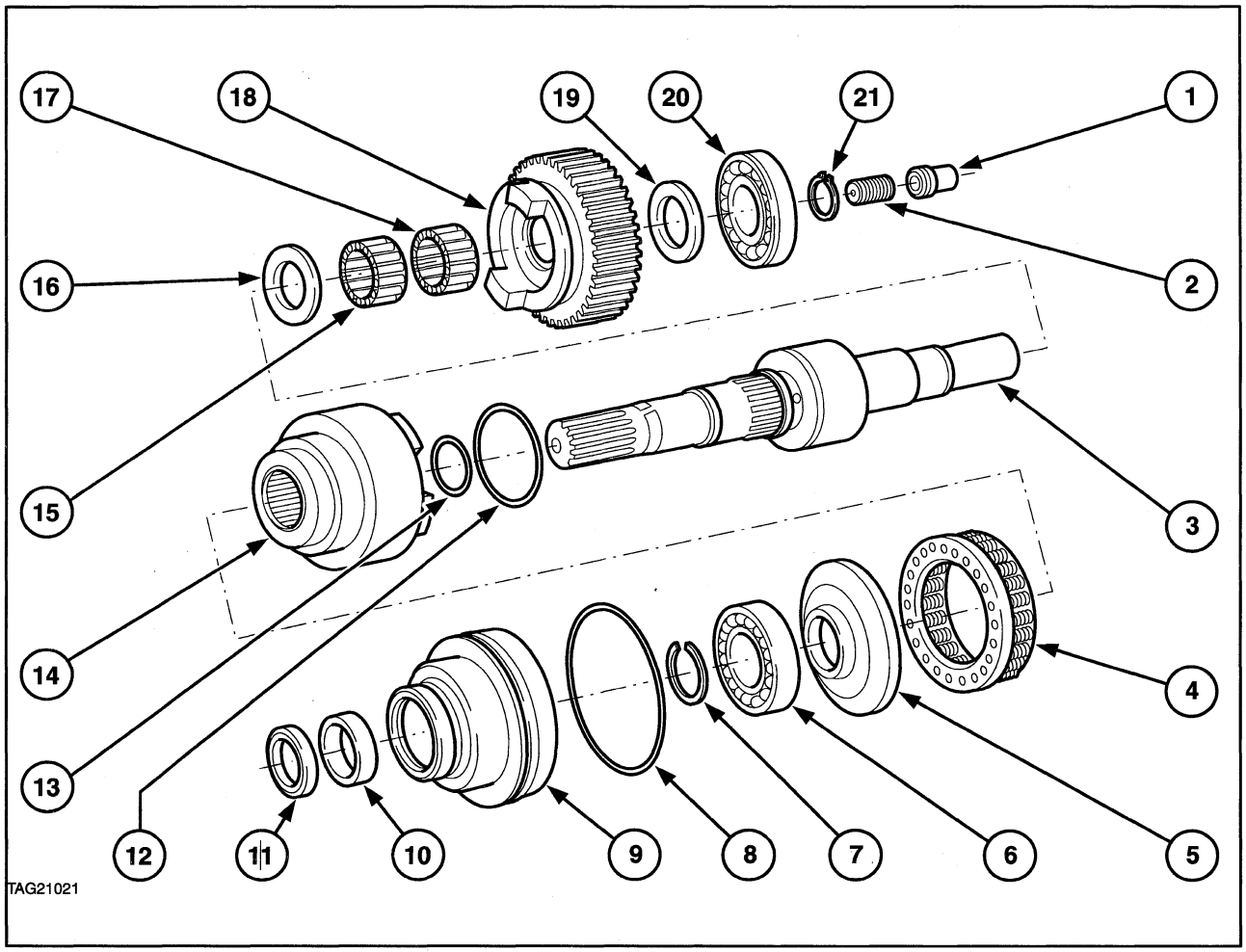

Front Wheel Drive Output Transfer Assembly - Exploded View 26

1. Oil Transfer Tube
2. Pilot Valve Assembly
3. Output Shaft
4. Engagement Spring Assembly
5. Spring Keeper
6. Front Bearing
7. Snap Ring
8. Oil Seal
9. Front Cover
10. Inner Seal
11. Outer Seal
12. Quad Seal
13. Quad Seal
14. Clutch Half
15. Needle Roller Bearing
16. Spacer
17. Needle Roller Bearing
18. Gear/Clutch Half
19. Spacer
20. Rear Bearing
21. Snap Ring

Front Wheel Drive Output Drive Assembly - Re-Assembly

1. Use the sectional illustration in Figure 27 to aid re-assembly and note the following references, giving them special attention.

2. Re-assembly of the front wheel drive output transfer assembly follows the disassembly procedure in reverse.

3. Coat the shaft seals with transmission fluid prior to re-assembly and allow the seals to resize before assembling the sliding clutch half.

4. Use a suitable press and sleeve to install the front and rear bearings, ensure when installing the front bearing that the sliding clutch half, the spring assembly and the keeper plate do not become misaligned and damage the seals.

5. Ensure the two washers, reference 11, Figure 27, are positioned either side of the driven clutch half.

6. In order for the dog clutch to perform correctly, it is essential that the pilot valve assembly, reference 8, Figure 27, is assembled with the ball facing rearwards.

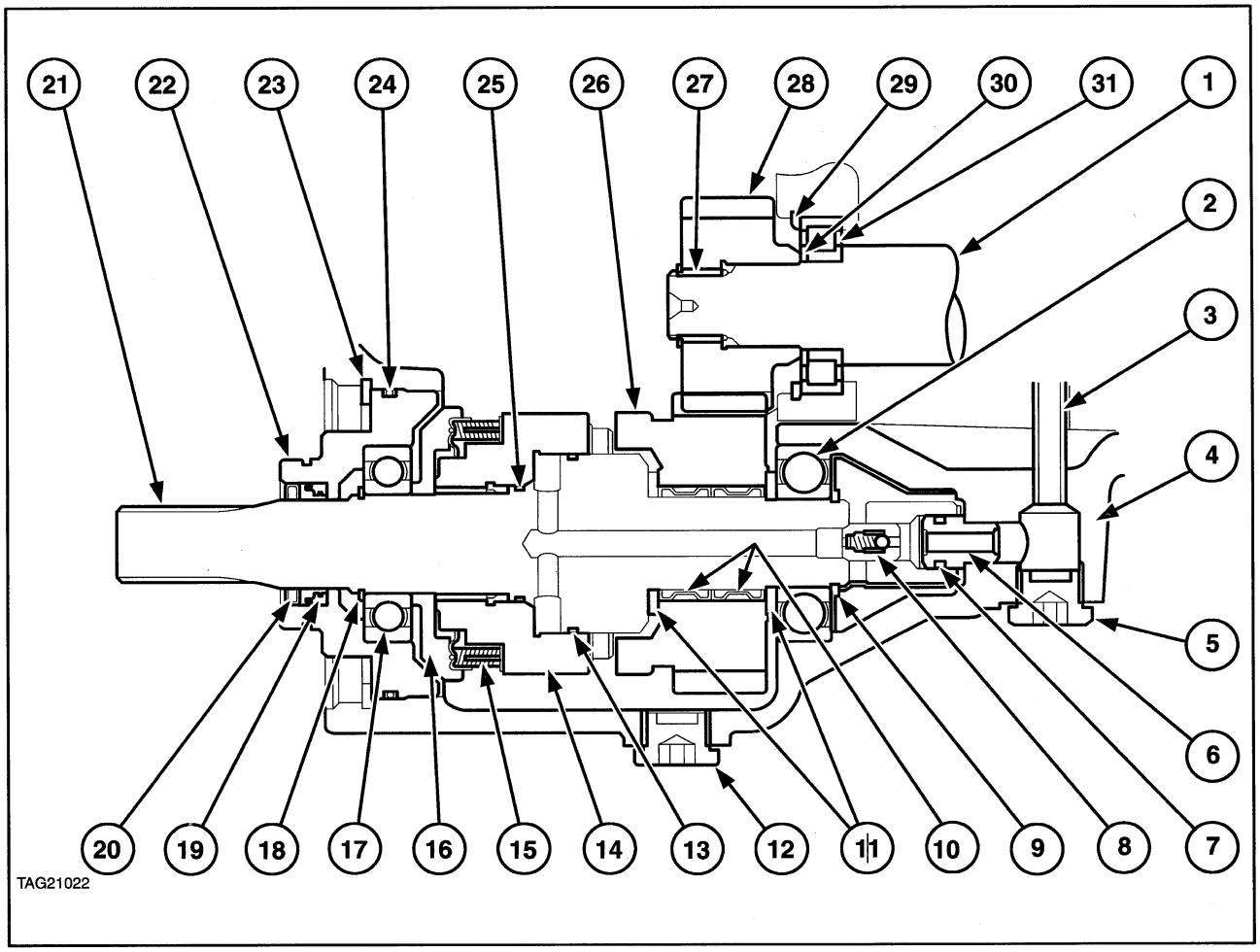

27

Front Wheel Drive Output Assembly - Sectional View

1. Shaft (from transmission output)
2. Output Shaft Rear Bearing
3. Oil Pressure Supply Tube
4. Transmission Housing
5. Plug (Pressure Supply)
6. Oil Transfer Tube
7. Oil Transfer Tube Polyamide Seal
8. Pilot Valve Assembly
9. Bearing Retaining Snap Ring
10. Needle Roller Bearings
11. Steel Washers
12. Transmission Drain Plug
13. Outer Piston Seal
14. Sliding Clutch Half
15. Engagement Spring Assembly
16. Spring Keeper
17. Output Shaft Front Bearing
18. Snap Ring
19. Oil Seal
20. Output Shaft
21. Dust Seal
22. Cover Plate
23. Cover Plate Retaining Snap Ring
24. Cover Plate 'O' Ring Seal
25. Inner Piston Seal
26. Clutch Half/Gear
27. Snap Ring
28. Drive Gear (from transmission output)
29. Bearing Thrust Washer
30. Snap Ring
31. Bearing Assembly

TRANSMISSION OVERHAUL

Transmission Stand Bracket

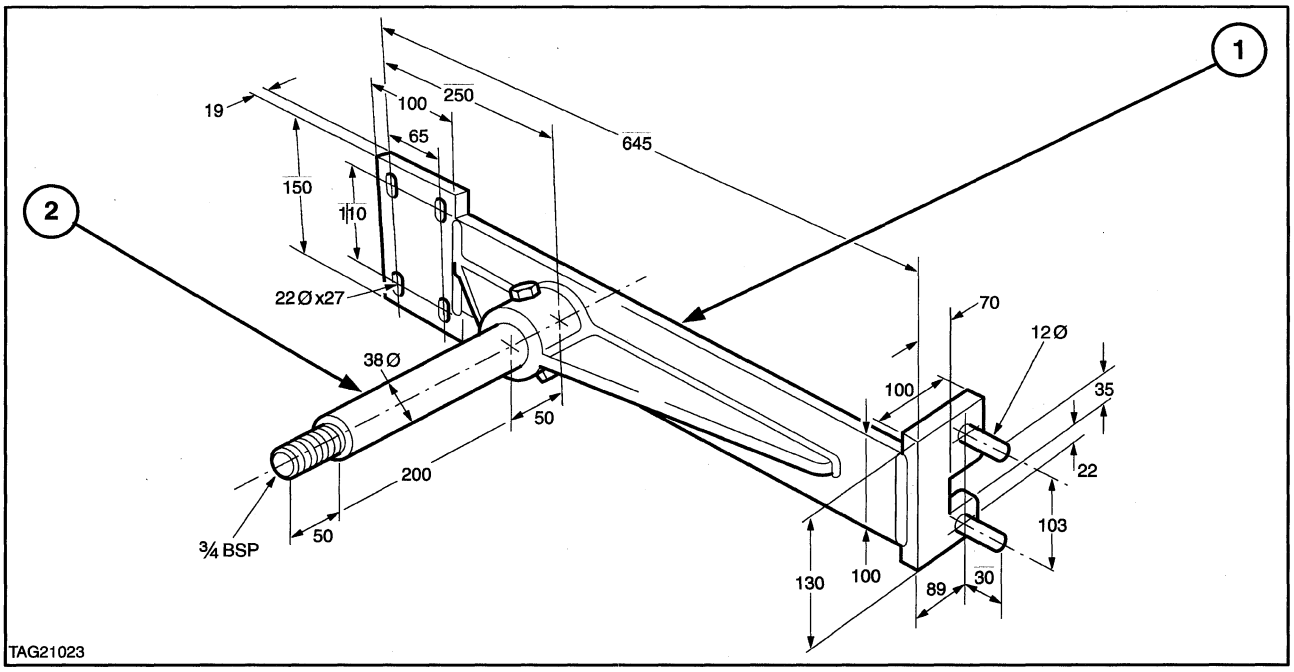

Transmission to Stand Attachment Bracket - Constructional Detail (Dimensions in millimetres unless stated) 28

1. Bracket Assembly
2. Stand Support Shaft

Although it is not necessary to mount the transmission in a rotating stand to carry out an overhaul, the bracket detailed above in Figure 28, which is also suitable for 16x16 transmissions, may be fabricated to mount the transmission to existing stands to aid overhaul and transporting of the transmission.

The stand support shaft reference 2, Figure 28, will enable the bracket to be coupled to existing V.L. Churchill Ltd stands. If a V.L. Churchill stand is not available a suitable support shaft will have to be fabricated.

DISASSEMBLY

Removal of Covers

1. Remove the tube from the side cover to the FWD connector (1), Figure 29.
2. Place all transmission levers to neutral, shown in Figure 29.
3. Remove the 8 securing bolts and withdraw the range shift side cover, (3), Figure 29, from the transmission.
4. Remove the 10 securing bolts and withdraw the ratio shift cover, (2), Figure 29, from the transmission.

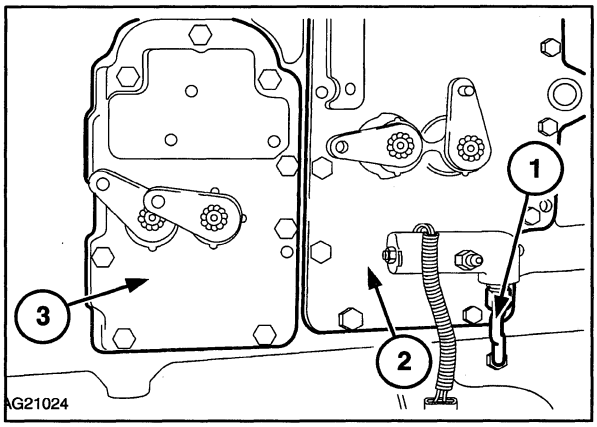

29

5. Remove the neutral start switch (1) to gain access to one of the bolts and remove the 8 securing bolts from the top cover and withdraw the top cover, Figure 30.

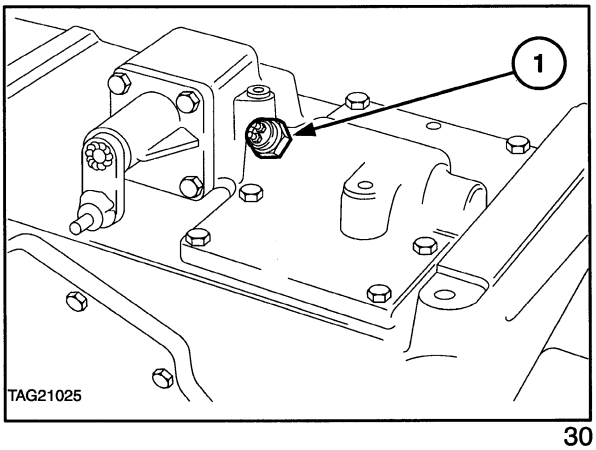

30

6. Remove the snap ring retaining the PTO shaft bearing, pull out the PTO shaft and bearing, Figure 31.

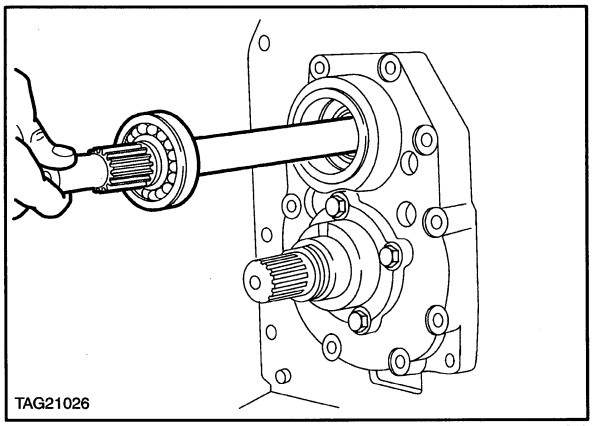

31

7. Remove the rear plate assembly, (10 bolts), Figure 32.
8. Remove the 4 bolts securing the output shaft retainer and remove the retainer and shims.

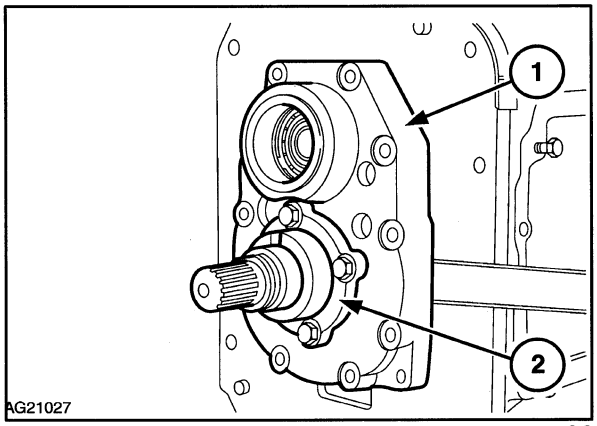

32

Removal of Transmission Rear End Components

1. Remove bearing from the range cluster gear assembly using a suitable puller, Figure 33.

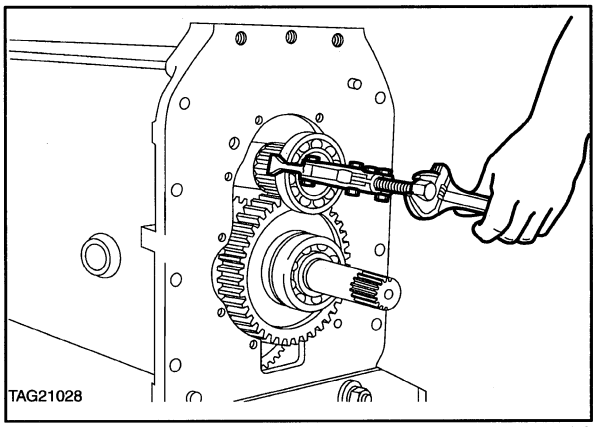

33

2. Remove the output shaft assembly (2) through the rear of the transmission, Figure 34.
3. Remove the medium range gear and synchroniser assembly (1) through the side of the transmission.

NOTE: *It may be necessary to move the FWD gear rearward slightly, by removing the outer circlip from the bearing.*

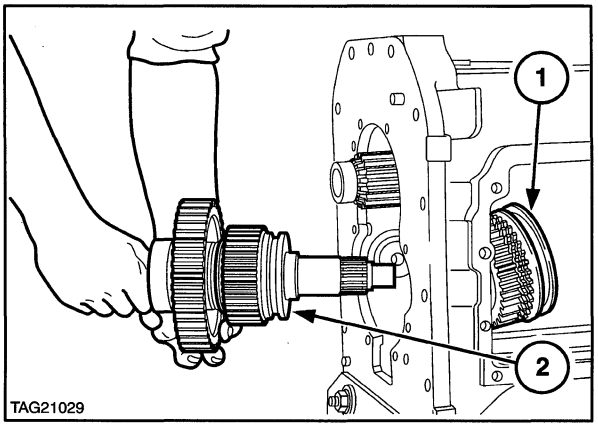

34

4. Remove the range cluster gear assembly (2), taking care not to damage the needle roller bearing (1), Figure 35.

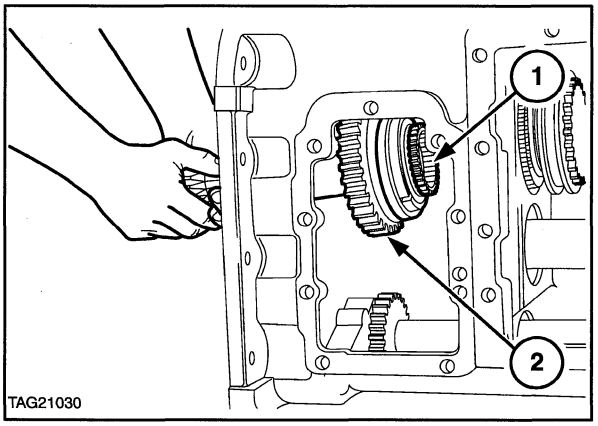

35

Removal of Transmission Front End Components

1. At the front of the transmission, remove the two tubes for the hydraulic release bearing, Figure 36.
2. Remove the hydraulic bearing assembly (2). (3 bolts), Figure 36.

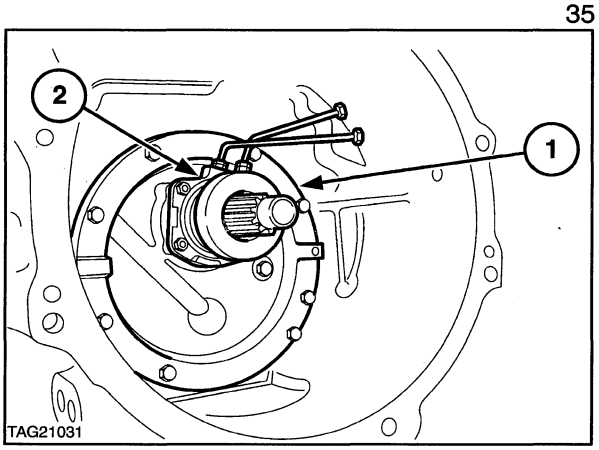

36

3. Remove front plate assembly (1), (8 bolts), Figure 36. To assist removal, use a suitable drift through the top cover aperture onto the rear face of the front cover. Progressively tap the cover near to the dowels, until the cover is free.

NOTE: *The reverse idler gear, front cover oil tube and transmission input shaft are also removed in this operation.*

4. Remove snap ring from (top) mainshaft. Move the reverse cluster forward slightly and slide off the forward/reverse synchroniser assembly, Figure 37.

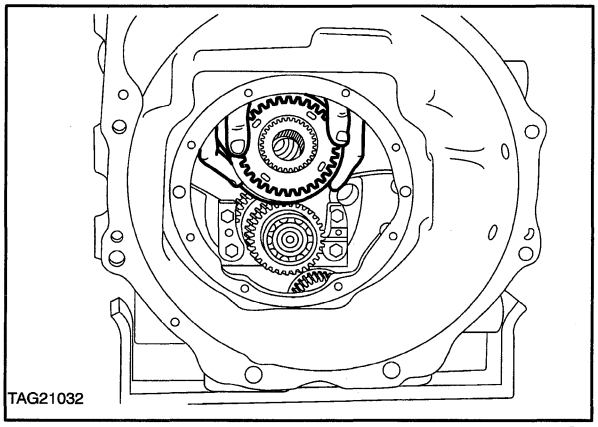

37

5. Slide off reverse gear, Figure 38.

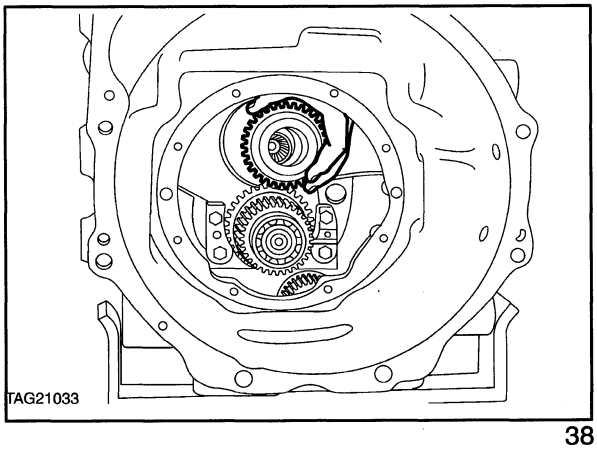

38

6. Remove the reverse cluster gear assembly, Figure 39.

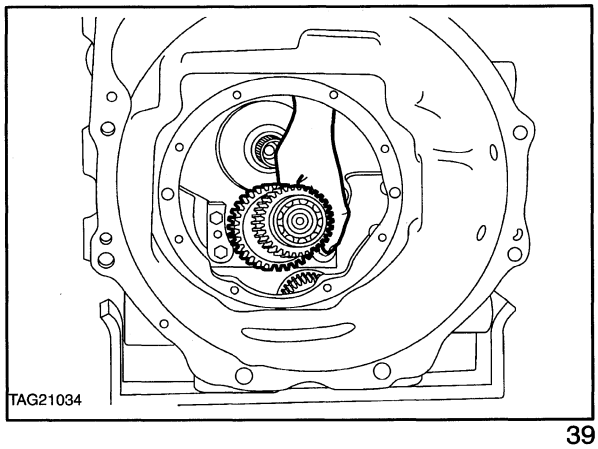

39

7. Lever out and remove the oil manifold, Figure 40.

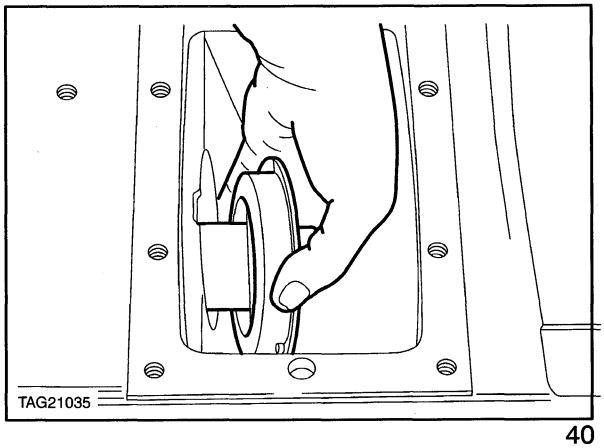

40

8. Remove snap ring from mainshaft front bearing, Figure 41.

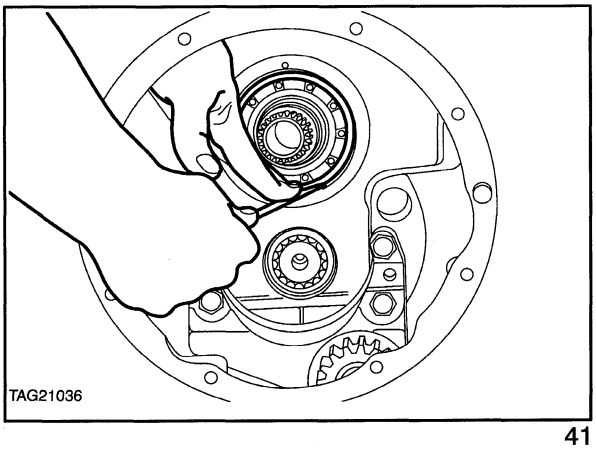

41

Removal of Transmission Centre Components

1. Remove snap ring from rear of mainshaft assembly (retains 3rd/4th synchroniser).

2. Pull back and drop the countershaft (2) down out of the way, Figure 42.

3. Remove mainshaft (1) from front of box (countershaft moved out of way), Figure 42 and remove 3rd/4th synchroniser, 3rd ratio gear and 2nd ratio gear (splined) (3), from the side of the transmission.

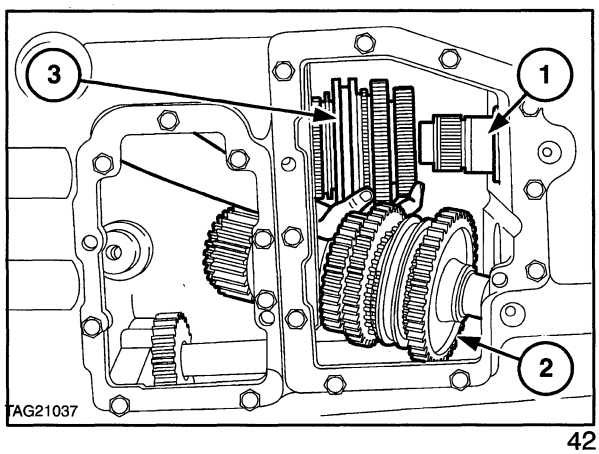

42

4. Remove snap ring from countershaft front end.
5. Slide the countershaft assembly shaft (4) out from the rear of the transmission casing, Figure 43.
6. Remove the following as an assembly, (from side window):-

   3rd ratio gear, (5)
   2nd ratio gear, (3)
   1st/2nd synchroniser assembly, (2)
   1st ratio gear. (1)

7. Remove the snap ring retaining the front countershaft bearing into the casing and punch out bearing.

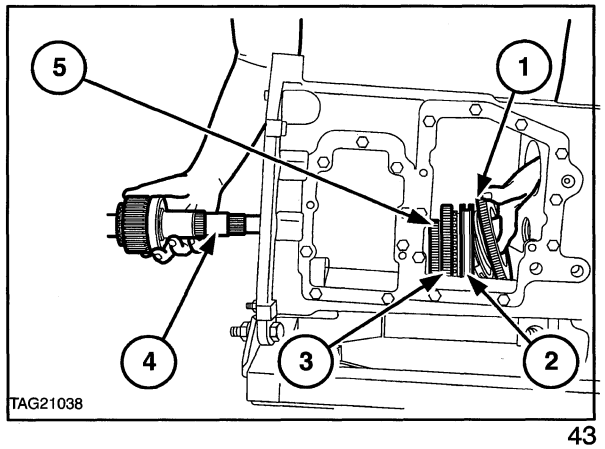

43

FWD Output Assembly and Driveshaft Removal

1. Remove the FWD output assembly cover snap ring, Figure 44.

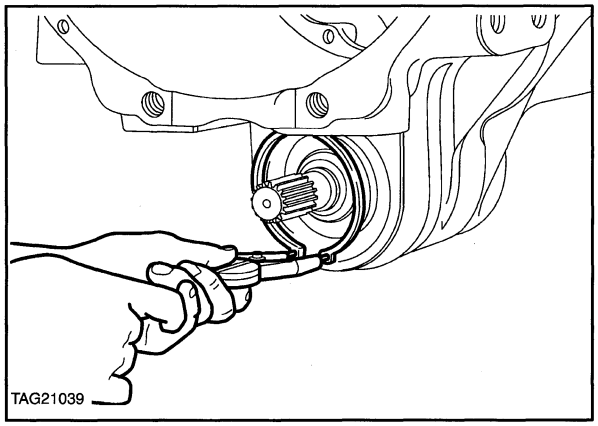

44

2. To assist removal, apply a suitable lever to pry points on the cover and lever against the transmission case to pull out assembly, Figure 45.

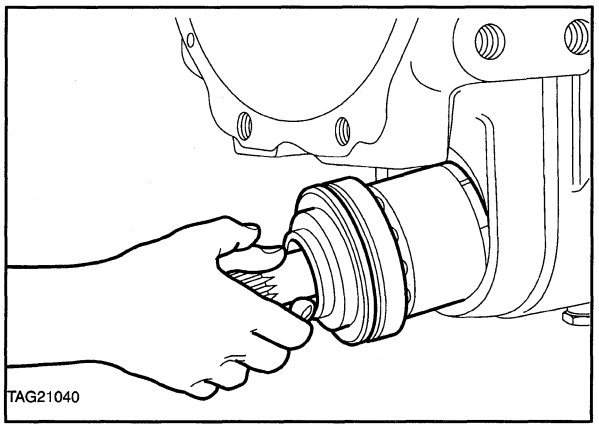

45

3. Remove snap ring from front end of shaft, retaining front gear assembly (3), Figure 46.
4. Remove outer snap ring retaining rear bearing (2) (if not already removed), Figure 46.
5. Remove snap ring from the groove in front of the rear gear (1). Allow snap ring to hang loose on shaft, Figure 46. Remove shaft and rear bearing as an assembly.

NOTE: *Remove FWD shaft from rear end.*

6. To remove the front FWD shaft bearing, remove the four bolts securing the FWD shaft bearing support assembly to the transmission casing. Remove the snap rings from either side of the bearing and push out the bearing.

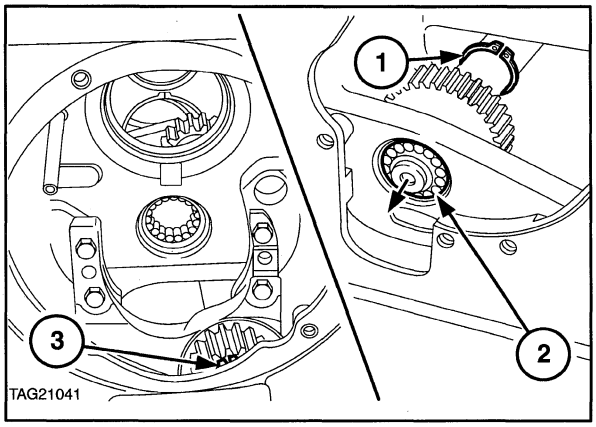

46

RE-ASSEMBLY

FWD Shaft Installation

1. Install the FWD shaft front bearing to the support assembly and secure with snap rings on either side.
2. Install the support to the transmission casing, secure with the four retaining bolts.
3. Ensure the rear snap ring for the rear bearing is installed into the transmission casing.
4. Position the front FWD gear between the shaft support assembly and the casing.
5. Ensure the rear gear rear snap ring is installed onto the shaft. Position and retain the rear bearing onto the shaft. Feed the shaft and bearing from the rear of the transmission casing, picking up the rear gear and its front snap ring, front bearing and front gear. Install the front gear snap ring.

NOTE: *Take care not to damage the front bearing rollers when installing the shaft.*

6. Retain the rear bearing with outer (casing) snap ring.

Centre Components Installation

1. Install snap ring into groove of transmission bore (front countershaft).
2. Install from the front the countershaft front needle bearing into the transmission casing.

3. Install through the transmission side window, successively, the following parts, as shown in Figure 47:-
   i) 1st ratio gear, (1)
   ii) 1st/2nd Synchroniser assembly, (2)
   iii) 2nd ratio gear, (3)
   iv) Splined 3rd ratio gear. (5)

   Engage 1st ratio gear (i) and 2nd ratio gear (iii) with splines of synchroniser.
4. Slide countershaft (4) from rear end, through parts installed during previous operation. Push shaft fully home, install washer and lock with snap ring.

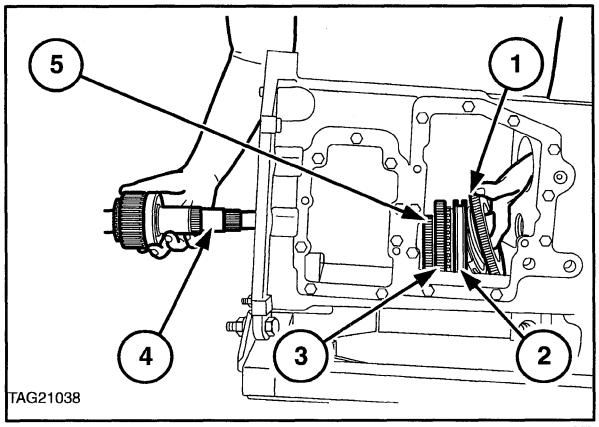

47

5. Install mainshaft (1), with front bearing installed, from the front end of the transmission, picking up the 3rd and 2nd ratio gear assemblies and complete 3rd/4th ratio synchroniser assembly, (3), Figure 48.

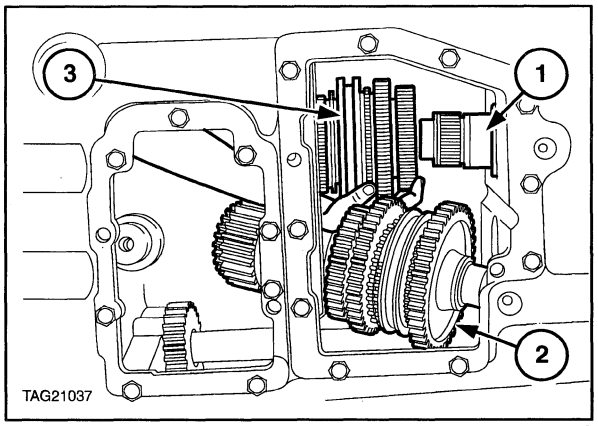

48

6. Align bearing on shaft to transmission bore and push in sufficiently to allow snap ring to be installed in casing bore, Figure 49.
7. Lock gears and synchroniser assembly to mainshaft with the rear snap ring.
8. Pull the mainshaft assembly rearwards slightly and locate the countershaft assembly into the front bearing, install a wooden wedge between the FWD shaft and a countershaft gear to hold in position. Push the the mainshaft forward, contacting the front bearing with the snap ring.
9. Install the needle roller bearing onto the rear of the mainshaft assembly.

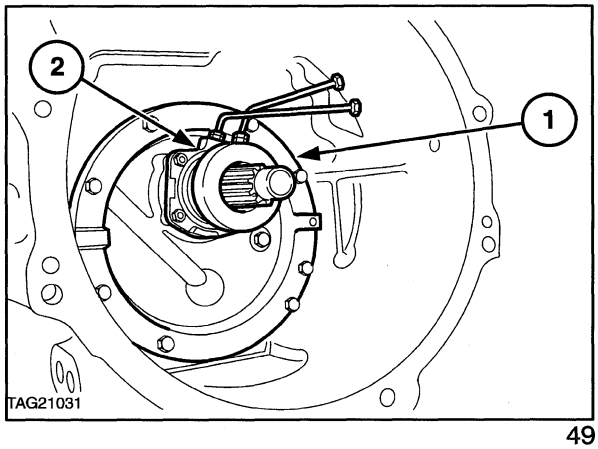

49

Rear End Components

1. Ensure the washer (1) is positioned onto the range cluster gear assembly, Figure 50, and install assembly, picking up mainshaft needle bearing and engaging on splines of 3rd/4th synchroniser. Ensure assembly is fully seated.
2. Assemble medium range gear with Hi/Med. range synchroniser.
3. Insert gear/synchroniser assembly through rear side window and engage with splines of countershaft.

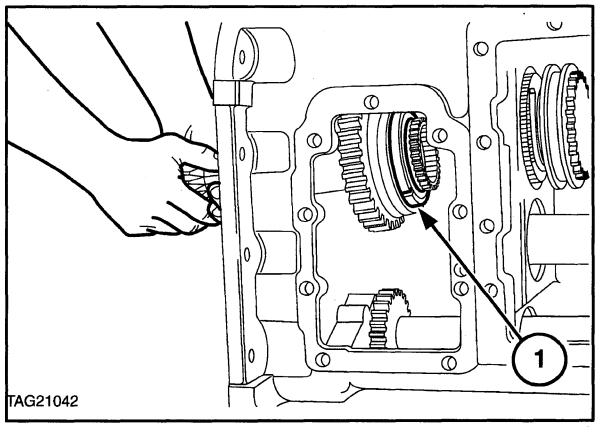

50

NOTE: *It may be necessary to move the FWD gear rearward slightly, by removing the outer circlip from the bearing. Ensure that the snap ring is replaced before the output shaft is installed.*

4. Install output shaft assembly (2) engaging gear and synchroniser assembly previously installed (1), Figure 51.
5. Install end bearing onto range cluster gear. Heat bearing to a maximum temperature of 125°C (257°F) and push up to shoulder of gear.
6. Assemble rear cover assembly to transmission case and secure (10 bolts).
7. Install retainer over output shaft to rear cover, (temporarily, to keep output shaft in position).

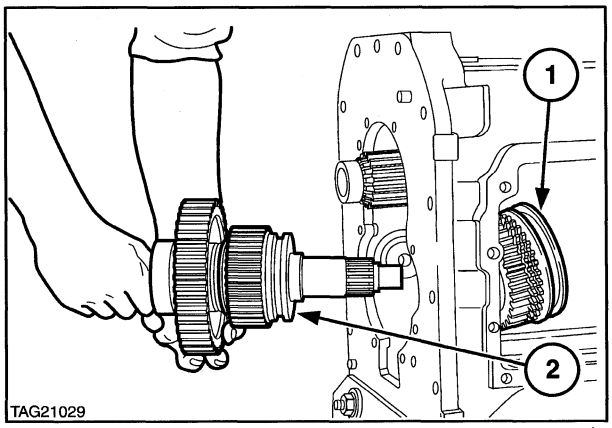

51

Front End Components

1. Install oil manifold assembly over mainshaft into casing bore, Figure 52. Align pegs with transmission case bores, and ensure oil hole alignment. Push fully home.
2. Install reverse cluster gear assy. DO NOT push fully home.
3. Slide onto the mainshaft the reverse gear and the forward/reverse synchroniser assembly.
4. With synchroniser engaged on mainshaft splines, move synchroniser, together with reverse cluster gear, into place.

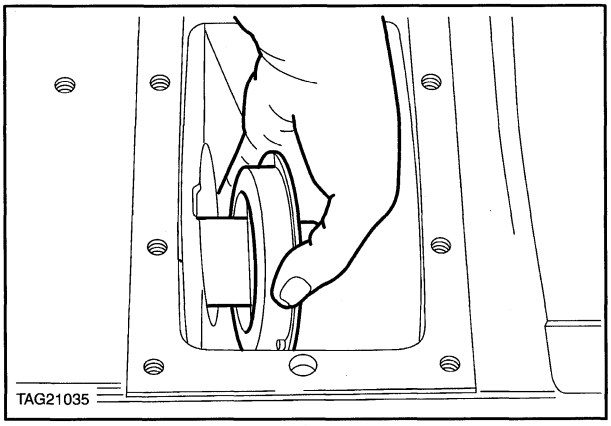

52

NOTE: *If necessary shift synchroniser to forward position to allow assembly. Return to neutral when correctly installed.*

5. Retain components on mainshaft with snap ring.
6. Apply a suitable gasket sealant (see Specifications, to the front cover face and locate the gasket. Apply sealant to the gasket face to ensure an oil tight joint.
7. Install the input shaft assembly and the reverse idler assembly into the front cover, secure the idler shaft with the retaining bolt and a new 'O' ring seal. Install the cover to the transmission, Figure 53, ensuring that the oil tube from the front cover to the transmission casing is correctly located.
8. Secure the cover with the 8 retaining bolts.
9. Assemble the hydraulic release bearing assembly to the front plate, secure with the 3 bolts.
10. Install hydraulic tubes.

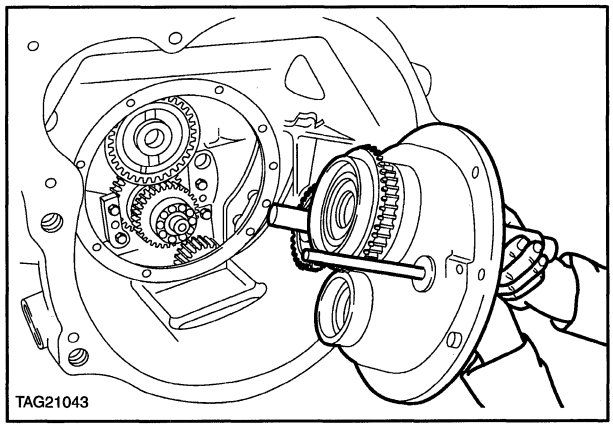

53

FWD Output

1. If FWD is fitted, position the FWD transfer assembly oil supply tube, complete with polyamide thrust seal, in the transmission housing. The tube is a press fit in the housing and should carefully be driven into its location using a suitable drift.

2. Place the FWD clutch quick release check valve in its bore, with the ball end facing rearward. Using a suitable driver, firmly strike the end of the rear of the valve to force the front of the valve against the internal oil gallery in the FWD shaft, this will seat or 'coin' the face, to ensure an effective oil seal during operation. Retain the valve with petroleum jelly.

3. Align the gear of the FWD output assembly with the drive gear in the transmission casing and install, Figure 54.

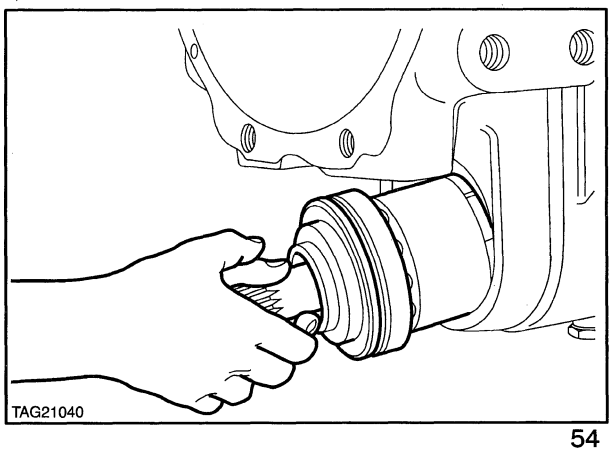

54

4. Install the FWD cover and secure with the snap ring, Figure 55. The use of suitable heavy duty snap ring pliers is recommended.

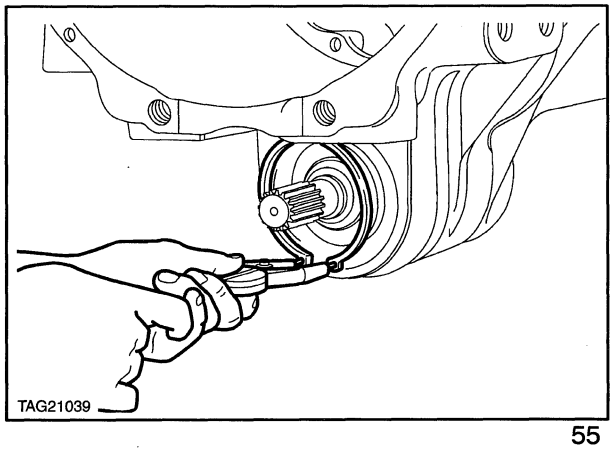

55

PTO Shaft

1. Grease and slide the PTO shaft assembly seal up to the shaft shoulder.

2. Install the PTO shaft into the transmission, Figure 56. Secure with snap ring.

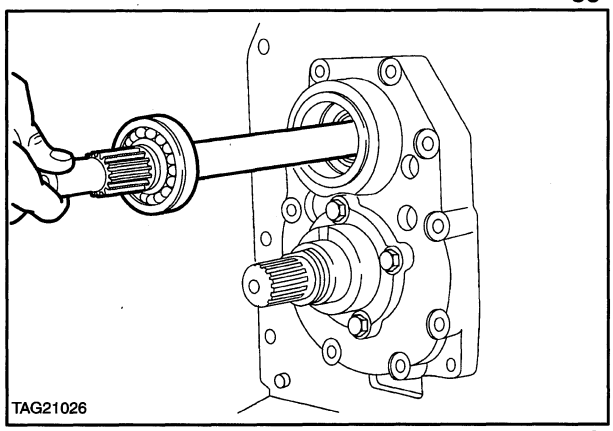

56

Output Shaft End Float

1. Check that the output shaft end float is between 0.001 - 0.003 in (0.0254 - 0.0762 mm) using the following procedure:

2. Remove the retainer assembly held in position with 2 bolts.

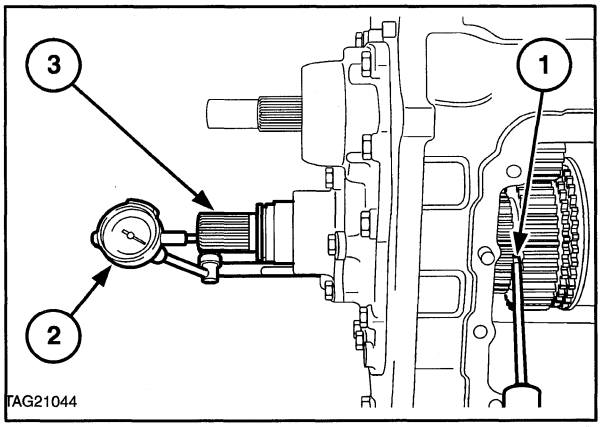

57

Install a number of shims (1), Figure 58, of known dimensions, and re-install the retainer (2), torque to correct specification.

Rotate the transmission several times to settle assembly. Using a suitable lever (1) under the FWD output gear and a dial indicator gauge (2) on the output shaft end face (3), Figure 57, measure the end float. From the figure read on the gauge, deduct the required amount to obtain an end float of between 0.001 - 0.003 in (0.0254 - 0.0762 mm).

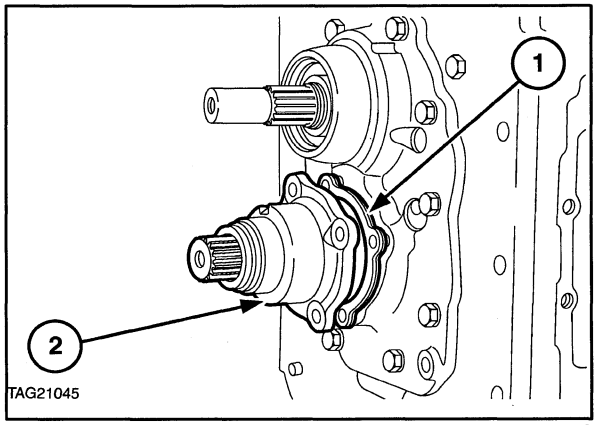

58

NOTE: *Increasing shim thickness increases the end float. Reducing shim thickness reduces end float.*

3. Install the output shaft bearing retainer ensuring that the oil slot faces towards the top.
4. Check free running of:-

   Input shaft,
   PTO shaft,
   Output shaft,
   FWD shaft.
5. Verify that there is clearance between gears and synchroniser cones.
6. Ensure all synchronisers are in neutral.

7. Install a new top cover gasket and install the top cover, with forks in neutral position, to the transmission assembly. Retain with 8 bolts. Install the neutral start switch after the cover has been tightened down.
8. Refit the ratio shifting cover using a new gasket, ensuring forks are in neutral. Secure with 10 bolts.
9. Refit the range shift cover, using a new gasket, ensure forks are in neutral, secure with 8 bolts.
10. Assemble the FWD to shift cover tube assembly.

TRANSMISSION COMPONENT ASSEMBLIES

GENERAL INSPECTION AND REPAIR

Inspect oil seals for wear and damage. If any doubt exists as to the condition of any seal, replace with a new seal. Apply a film of clean transmission oil to the sealing lip of any seal prior to installation.

Clean bearings in a suitable cleaning solvent and inspect. If wear is evident or a bearing is not free running, replace with a new bearing.

Inspect the gears for wear and chipped teeth. Inspect the shafts for wear and ensure that oil galleries are free from obstruction. Replace gears or shafts that are damaged or worn. If any taper roller bearings or cups are found to be unserviceable these must be replaced in matching sets.

If the transmission case has been completely disassembled, clean the case internally and externally. Inspect the case for damage or cracks.

Prior to assembly of components into the transmission, ensure components are free from dirt or other contamination. When assembling components to the transmission casing lubricate bearings and shafts with clean transmission oil.

NOTE: *The following component assembly instructions detail the level of assembly required prior to transmission re-assembly.*

RANGE CLUSTER GEAR ASSEMBLY

Assembly

1. Using a press with suitable adaptors install front bearing and washer.

Range Cluster - Figure 59

1. Rear Bearing
2. Cluster Gear
3. Washer
4. Front Bearing

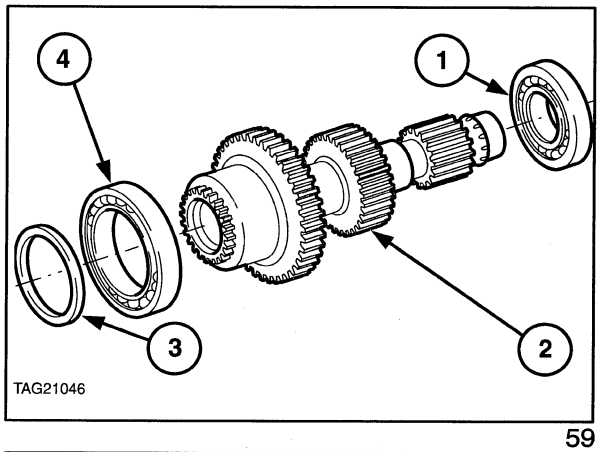

59

MAINSHAFT ASSEMBLY

Assembly

1. Using a press with suitable adaptors install bearing, reference 11, onto mainshaft assembly.

Mainshaft - Figure 60

1. Snap Ring
2. 3rd/4th Synchroniser
3. 3rd Ratio Gear
4. 2nd Ratio Gear
5. Bearing
6. Shaft
7. Snap Ring
8. Forward/Reverse Synchroniser
9. Reverse Gear
10. Oil Manifold
11. Bearing

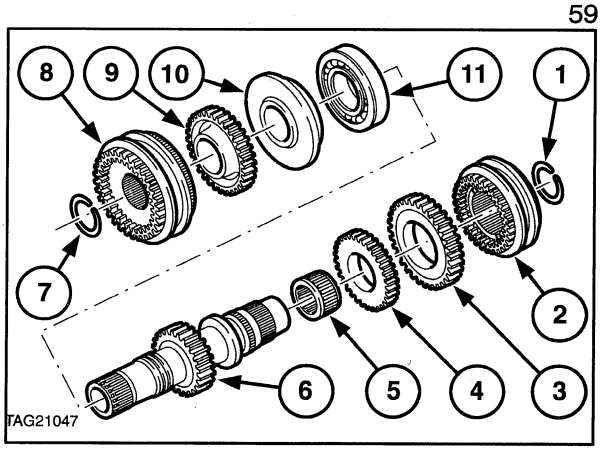

60

FWD COUNTERSHAFT

Assembly

1. Install snap ring, reference 6, Figure 61 onto shaft.
2. Install rear bearing, reference 9, Figure 61, and retaining snap ring reference 7, Figure 61.
3. Install front bearing, reference 3, Figure 61, into transmission casing.

FWD Countershaft Components - Figure 61

1. Snap Ring
2. Output Drive Gear
3. Front Bearing (Installed into Front Support)
4. Snap Ring
5. Shaft Driven Gear
6. Casing Snap Ring
7. Snap Ring, Bearing To Shaft Retaining
8. Casing Snap Ring
9. Rear Bearing
10. Shaft

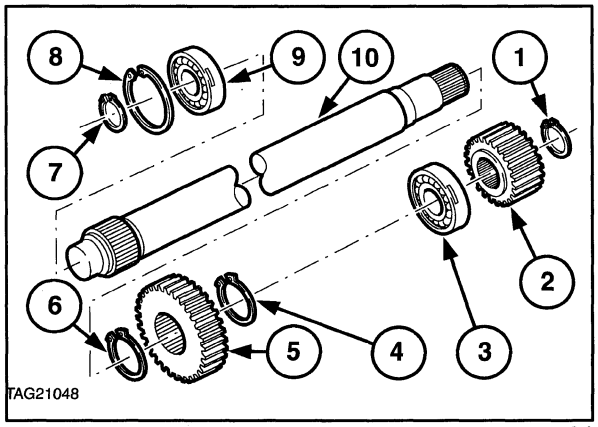

61

PTO DRIVE SHAFT ASSEMBLY

Assembly

1. Install snap ring, reference 5, Figure 62, to shaft.
2. Press on bearing, reference 4, Figure 62, and lock into position with snap ring, reference 3, Figure 62.
3. Slide seal up to shoulder of shaft.

PTO Shaft Figure 62

1. Seal
2. Shaft
3. Snap Ring
4. Bearing
5. Snap Ring

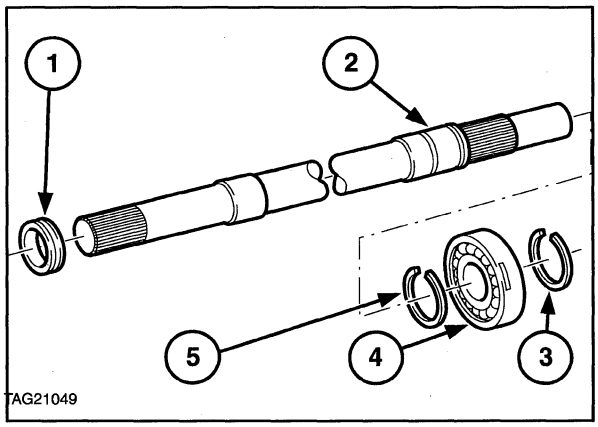

62

REVERSE CLUSTER GEAR ASSEMBLY

Assembly

1. Install Hollow pin, reference 4, Figure 63. It is important that this pin is installed correctly as it supplies lubricating oil to the front bearing.
2. Press on the two end bearings using suitable adaptors.

Reverse Cluster Gear Figure 63

1. Front Bearing
2. Gear Cluster
3. Rear Bearing
4. Hollow Pin

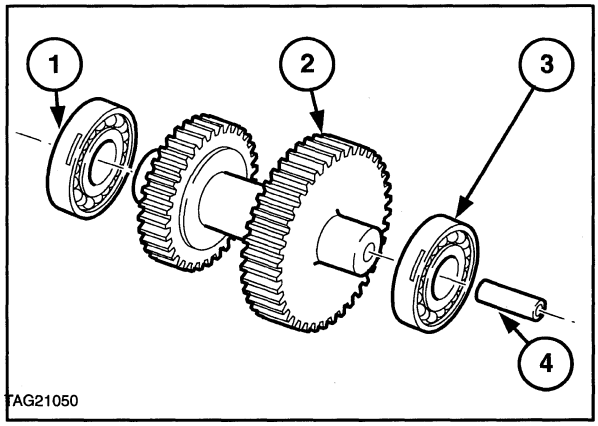

63

REVERSE IDLER ASSEMBLY

1. Assemble the idler gear, reference 10, Figure 64 and washers to the shaft and retain with snap rings, references 5 and 8, Figure 64.
2. Secure the gear and shaft assembly to the front cover using the bolt and washer with a new 'O' ring seal.

Reverse Idler Components - Figure 64

1. Bolt
2. Washer
3. 'O' Ring
4. Oil Transfer Tube
5. Shaft
6. Washer
7. Snap Ring
8. Idler Gear
9. Washer
10. Snap Ring
11. Front Plate

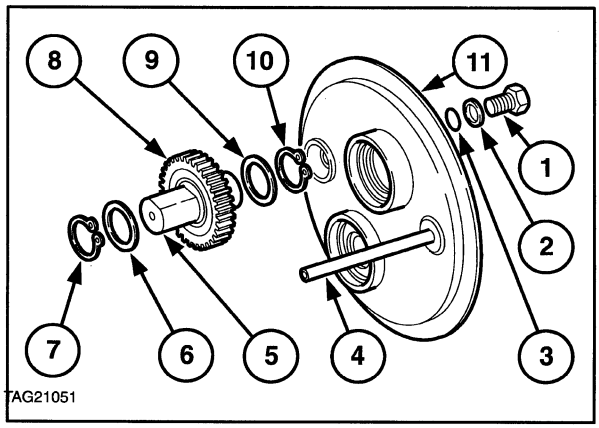

64

OUTPUT SHAFT ASSEMBLY

Assembly

1. Install onto the shaft the following components in the sequence listed:-

   Low range coupler, reference 6 Figure 65,
   Low range gear, reference 5, Figure 65,
   Washer, reference 4, Figure 65,
   Spacer, reference 3, Figure 65,
   Rear cone and roller bearing reference 2, Figure 65.

   Ensure that the coupler is a free sliding fit on the shaft and that the gear is free to rotate.
2. Install the cone and roller bearing assembly on the opposite end, reference 7, Figure 65.

Output Shaft Components - Figure 65

1. Shaft
2. Rear Bearing
3. Spacer
4. Washer
5. Low Range Gear
6. Low Range Coupler
7. Front Bearing
8. Hi/Med. Range Synchroniser
9. Medium range Gear

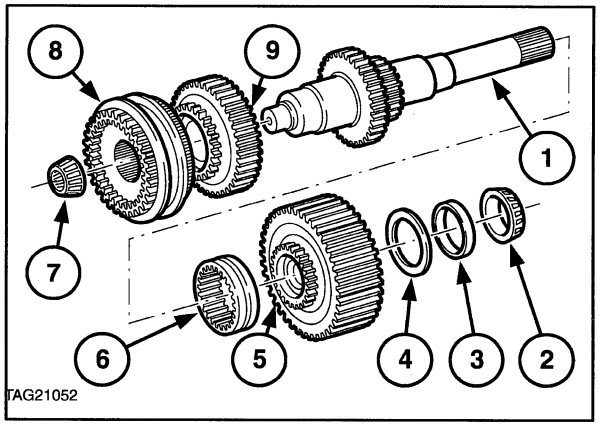

65

MAIN COUNTERSHAFT

Assembly

1. Press on bearing, reference 6, Figure 66, using suitable adaptors.
2. Press in the bearing cup, reference 5, Figure 66.

Countershaft Assembly - Figure 66

1. 3rd Gear
2. 1st Ratio Gear
3. 1st/2nd Synchroniser
4. 2nd Ratio Gear
5. Bearing Cup
6. Bearing
7. Shaft

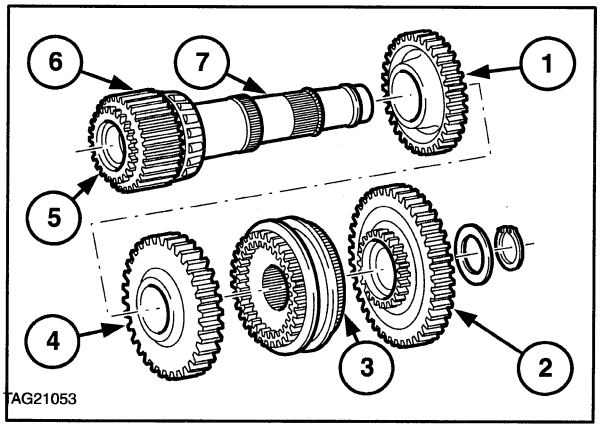

66

INPUT SHAFT

Assembly

1. Install bearing, reference 1 onto shaft, reference 2, Figure 67.
2. Install seal, reference 3, Figure 67, into rear of shaft. Grease lip prior to assembly.

Input Shaft Components Figure 67

1. Bearing
2. Shaft
3. PTO Shaft Seal

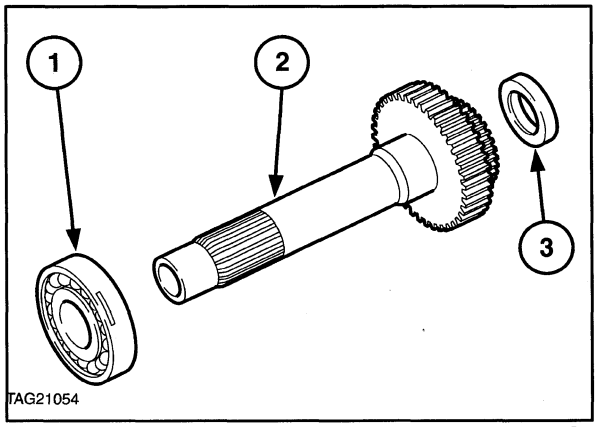

67

SYNCHRONISER ASSEMBLIES

The 12x12 transmission incorporates four baulk ring type synchronisers, their locations shown in Figure 3.

Synchroniser Assembly

1. Clutch Body
2. Synchroniser Ring
3. Sliding Sleeve
4. Synchroniser Body
5. Synchroniser Ring
6. Clutch Body
7. Spring
8. Guide
9. Plunger

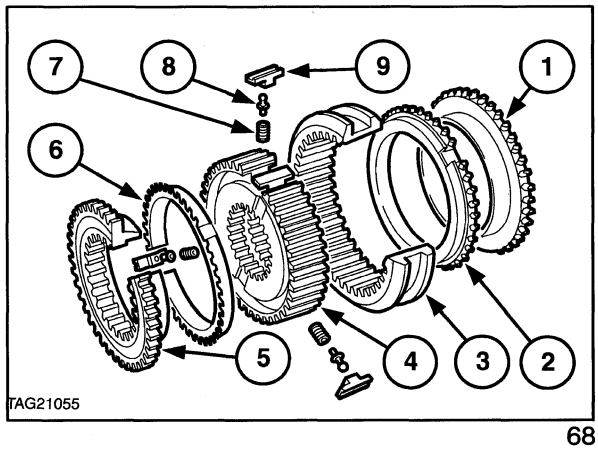

68

Synchroniser operation:

In the neutral position the plungers are pressed into the V-shaped recesses in the sliding sleeve. The gears are free to rotate on the shaft. See 'A' Figure 69.

As the sliding sleeve is moved from neutral towards the gear to be selected, the synchroniser ring is pressed against the clutch body. Any difference in speed of the parts to be engaged causes the synchroniser ring rotate. This rotation, which is limited by stops, causes the chamfered teeth of the synchroniser ring to be pressed against those of the sliding sleeve and prevent any further movement of the sliding sleeve, see 'B' Figure 69.

Further shift pressure causes the synchroniser ring and clutch body to eventually rotate at the same speed and the shaft and gear speeds are synchronised.

After synchronisation, no rubbing exists between the clutch body and synchroniser ring. The force on the chamfered teeth of these components is relaxed, allowing the sliding sleeve to move past the synchroniser ring and engage on the gear driving tooth, See 'C' Figure 69.

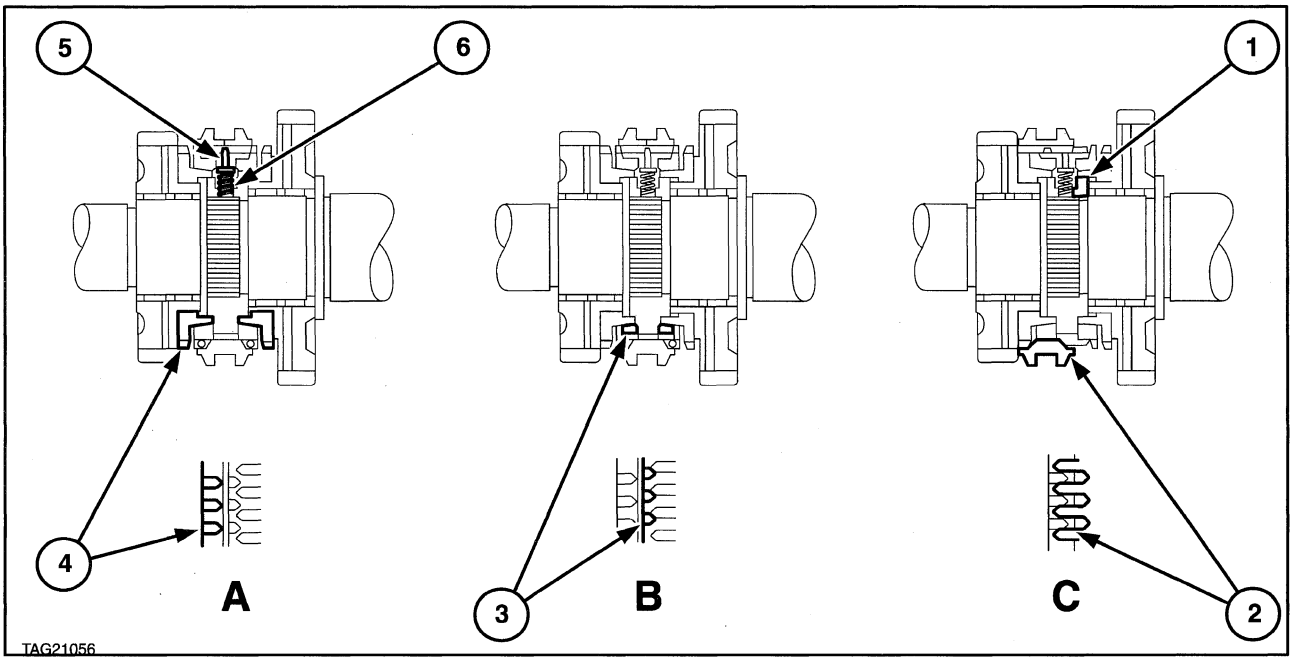

Synchroniser Operation 69

1. Synchroniser Body
2. Sliding Sleeve
3. Synchroniser Ring
4. Clutch Body
5. Plunger
6. Spring

Synchroniser Inspection

1. Inspect the sliding sleeve, ensuring that wear is even around the circumference of the sleeve. If wear is uneven or there is evidence of fork pick up, replace the sleeve and inspect the shift forks.
2. Inspect the friction material on the synchroniser ring. Replace the ring if friction material is missing, there is visually uneven wear or the material is excessively worn, as determined in the following test:

Table 1

Synchroniser	New Gap mm (Inches)	Minimum Gap mm (Inches)
Forward/Reverse	2.0 (0.079)	0.8 (0.032
High/Medium	1.8 (0.071)	0.8 (0.032)
1/2 3/4	1.6 (0.063)	0.8 (0.032)

Synchroniser Ring Wear

Place the synchroniser ring (3) over the synchroniser clutch body (1). Rotate the ring several times over the clutch body to ensure correct seating.

Using a feeler gauge (2) determine the gap between the ring and clutch body. Insert the gauge at three equally spaced points around the circumference, as shown in Figure 70. From Table 1 determine if the synchroniser ring is still serviceable. Replace the synchroniser if the gap is at or below the minimum specified.

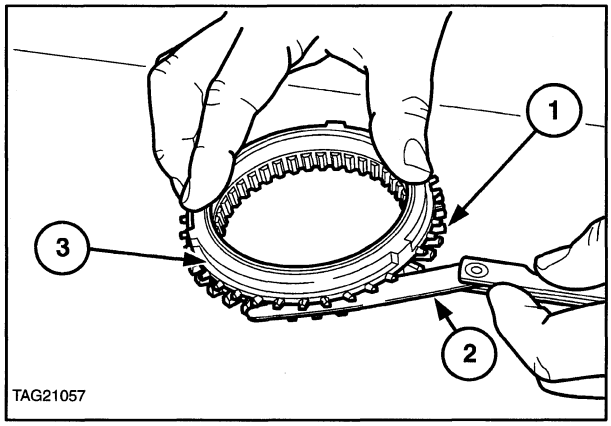

70

8 × 2 TRANSMISSION

SPECIFICATIONS, TIGHTENING TORQUES AND SPECIAL TOOLS

SPECIFICATIONS

Output Shaft End float	0.0015 - 0.0034 (0.038 - 0.086 mm)
Output Shaft End Float Shims Available	0.003 in (0.076 mm) 0.005 in (0.127 mm) 0.012 in (0.305 mm)
Oil Capacity	Common With Rear Axle
Imp. gallons	14.5
U.S. gallons	17.4
Litres	66.0
Transmission/Rear Axle Oil Specification	134 D

Ground Speed Charts

The charts on the two following pages show the ground speeds in MPH and km/h. The charts are for tractors fitted with Dual Power and creeper gears. If your tractor does not have either of these features, then the lines on the chart that are preceded by 'C' or 'Power' should be ignored. The road speeds in the charts relate to tractors with 16.9 - 34 rear tyres. If the rear tyres of your tractor are of a different size, then **multiply** each of the ground speeds shown in the printed charts by the following conversion factors:

Rear tyre size	Conversion factor
13.6 - 36 13.6 - 38	0.960 0.993
16.9 - 30 16.9 - 38	0.933 1.067
18.4 - 26 18.4 - 30 18.4 - 34 18.4 - 38	0.899 0.966 1.033 1.101
20.8 - 38	1.148

Ground Speeds in Miles per Hour (16.9 - 34 Rear Tyres) 8 × 2 and 16 × 4 Transmissions							
Main Shift Lever	Range Lever	Dual Power	Miles per hour Engine Speed (rev/min)				Trans Gear Ratio
			1500	1900	2100	2200	
1	C	Power	0.16	0.20	0.23	0.24	67.08
1	C	Direct	0.21	0.27	0.30	0.31	52.18
2	C	Power	0.20	0.26	0.29	0.30	53.75
2	C	Direct	0.26	0.33	0.37	0.38	41.81
3	C	Power	0.36	0.46	0.50	0.53	30.63
3	C	Direct	0.46	0.59	0.65	0.68	23.82
4	C	Power	0.48	0.61	0.68	0.71	22.50
4	C	Direct	0.63	0.80	0.88	0.92	17.50
1	L	Power	0.93	1.18	1.31	1.37	11.74
1	L	Direct	1.20	1.52	1.69	1.76	9.13
2	L	Power	1.17	1.49	1.64	1.72	9.41
2	L	Direct	1.51	1.91	2.11	2.21	7.32
3	L	Power	2.05	2.60	2.88	3.01	5.36
3	L	Direct	2.64	3.34	3.70	3.87	4.17
4	L	Power	2.80	3.54	3.91	4.10	3.94
4	L	Direct	3.59	4.55	5.03	5.27	3.06
1	H	Power	3.35	4.25	4.69	4.92	3.29
1	H	Direct	4.30	5.45	6.03	6.31	2.56
2	H	Power	4.18	5.29	5.85	6.13	2.63
2	H	Direct	5.38	6.81	7.53	7.89	2.05
3	H	Power	7.34	9.29	10.27	10.76	1.50
3	H	Direct	9.44	11.95	13.20	13.84	1.17
4	H	Power	9.99	12.65	13.98	14.65	1.10
4	H	Direct	12.84	16.26	17.98	18.83	0.86
R	C	Power	0.31	0.39	0.33	0.45	46.67
R	C	Direct	0.36	0.46	0.42	0.53	36.30
R	L	Power	1.35	1.71	1.89	1.98	8.17
R	L	Direct	1.73	2.19	2.42	2.54	6.35
R	H	Power	4.81	6.10	6.74	7.06	2.29
R	H	Direct	6.19	7.84	8.62	9.08	1.78

Ground Speeds in Kilometers per Hour (16.9 - 34 Rear Tyres) 8 × 2 and 16 × 4 Transmissions							
Main Shift Lever	Range Lever	Dual Power	Kilometers per hour Engine Speed (rev/min)				Trans Gear Ratio
			1500	1900	2100	2200	
1	C	Power	0.27	0.34	0.37	0.39	67.08
1	C	Direct	0.34	0.47	0.48	0.50	52.18
2	C	Power	0.33	0.41	0.46	0.48	53.75
2	C	Direct	0.42	0.54	0.59	0.62	41.81
3	C	Power	0.58	0.73	0.81	0.85	30.63
3	C	Direct	0.74	0.94	1.04	1.09	23.82
4	C	Power	0.78	0.99	1.10	1.15	22.50
4	C	Direct	1.01	1.28	1.42	1.48	17.50
1	L	Power	1.51	1.91	2.11	2.21	11.74
1	L	Direct	1.94	2.45	2.72	2.84	9.13
2	L	Power	1.88	2.38	2.64	2.76	9.41
2	L	Direct	2.42	3.07	3.39	3.55	7.32
3	L	Power	3.31	4.19	4.63	4.85	5.36
3	L	Direct	4.25	5.38	5.95	6.23	4.17
4	L	Power	4.50	5.70	6.30	6.60	3.94
4	L	Direct	5.78	7.32	8.10	8.84	3.06
1	H	Power	5.39	6.83	7.55	7.91	3.29
1	H	Direct	6.93	8.77	9.70	10.16	2.56
2	H	Power	6.73	8.52	9.42	9.87	2.63
2	H	Direct	8.65	10.96	12.11	12.69	2.05
3	H	Power	11.81	14.96	16.63	17.32	1.50
3	H	Direct	15.18	19.23	21.25	22.27	1.17
4	H	Power	16.07	20.36	22.50	23.57	1.10
4	H	Direct	20.67	26.18	28.93	30.31	0.86
R	C	Power	0.38	0.48	0.53	0.56	46.67
R	C	Direct	0.49	0.62	0.68	0.72	36.30
R	L	Power	2.17	2.75	3.04	3.18	8.17
R	L	Direct	2.79	3.53	3.90	4.09	6.35
R	H	Power	7.75	9.81	10.85	11.36	2.29
R	H	Direct	9.96	12.62	13.95	14.61	1.78

TIGHTENING TORQUES

	Lbf.ft	Nm
Clutch Release Bearing Hub Support Bolts	49	67
Clutch Release Fork Bolt	35	47
Front Support Plate Bolts	32	44
Gear Shift Cover Assembly Bolts	41	56
Gear Shift Forks and Connectors (Bolts and Locknuts)	23	31
Output Shaft Retainer Bolts	32	44
Rear Support Plate Bolts	32	44
Reverse Idler Shaft Retaining Bolt	17	24
Start Inhibitor Switch	30	40

SPECIAL TOOLS

DESCRIPTION	V.L. CHURCHILL TOOLS	NUDAY LTD TOOLS	NH
Heavy Duty Ratchet	P61	9162	
Slide Hammer	MS.284	9567	FNH09567
Shaft Protectors	625A	9212	FNH09212
Step Plates	630S	9210	FNH09210
Puller Legs	930B	9521	FNH09521
Puller	938	9506	FNH09506
Internal/External Puller	943	9507	FNH09507
Slide Hammer	943S	9567	FNH09567
Pulling Attachments:			
Small	951	9190	FNH09190
Large	952	9526	FNH09526
Pullers:			
Small	1001	9196	FNH09196
Medium	1002	9198	FNH09198
Large	1003	9516	FNH09516

TRANSMISSION - DESCRIPTION AND OPERATION

The non-synchromesh transmission is of a constant mesh design and provides eight forward and two reverse speeds which are manually selected by two levers. The main gear lever selects any one of four forward or one reverse speeds whilst a second shorter lever is used to select an overall high or low ratio.

The transmission incorporates a start inhibitor switch which allows the tractor starter motor only to be operated when the secondary (range) lever is in the neutral position.

The gears are all in constant mesh and gear connections are made by sliding couplings. The transmission mainshaft is located in the top drive line and the main countershaft and output shaft are located in the bottom drive line. The transmission is available with Independent single or two speed P.T.O., not shiftable. Refer to the "POWER TAKE-OFF" -Section for further details of the P.T.O. drive line.

The transmission features straight cut type gears on all gears. Roller bearings are used throughout the transmission, except on the output shaft assembly where taper roller bearings are used. Shims between the output shaft end cover and bearing retainer provide the method of controlling output shaft end float.

The low pressure hydraulic system oil is utilised to effect pressure lubrication of the front transmission. A proportion of the low pressure hydraulic oil is fed, by means of external pipework, to an oil cooler located at the front of the tractor from which the cooled oil is directed to the front of the transmission.

A hollow main countershaft and output shaft are utilised to accept oil from the cooler. Cross drillings in the main countershaft and output shaft allow the oil to lubricate and cool the transmission gears.

The hydraulic return oil flows through the front transmission back to the rear axle and tractor hydraulic system. The front transmission, rear axle and hydraulic system, therefore, form a common oil reservoir.

A Dual Power option which consists of a planetary gear set installed directly between the clutch and input shaft of the standard transmission is available. The planetary gear set provides either a direct drive or an underdrive in each gear ratio of the standard transmission. Refer to 8 × 2 Dual Power in Section 6.

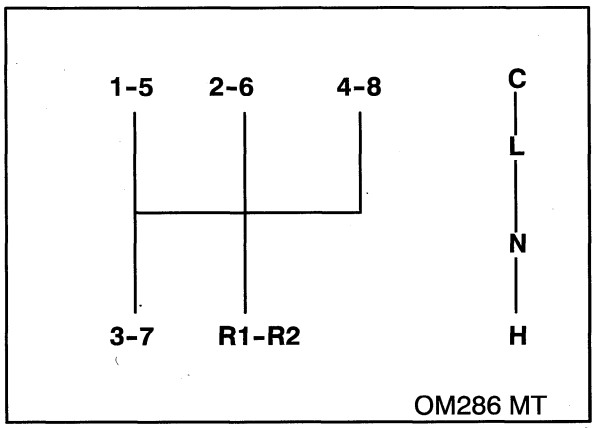

71

Gear Shift Lever Positions
(With Optional Creeper Gears)

L = Low Range
N = Neutral
C = Creeper gears
H = High Range
R = Reverse

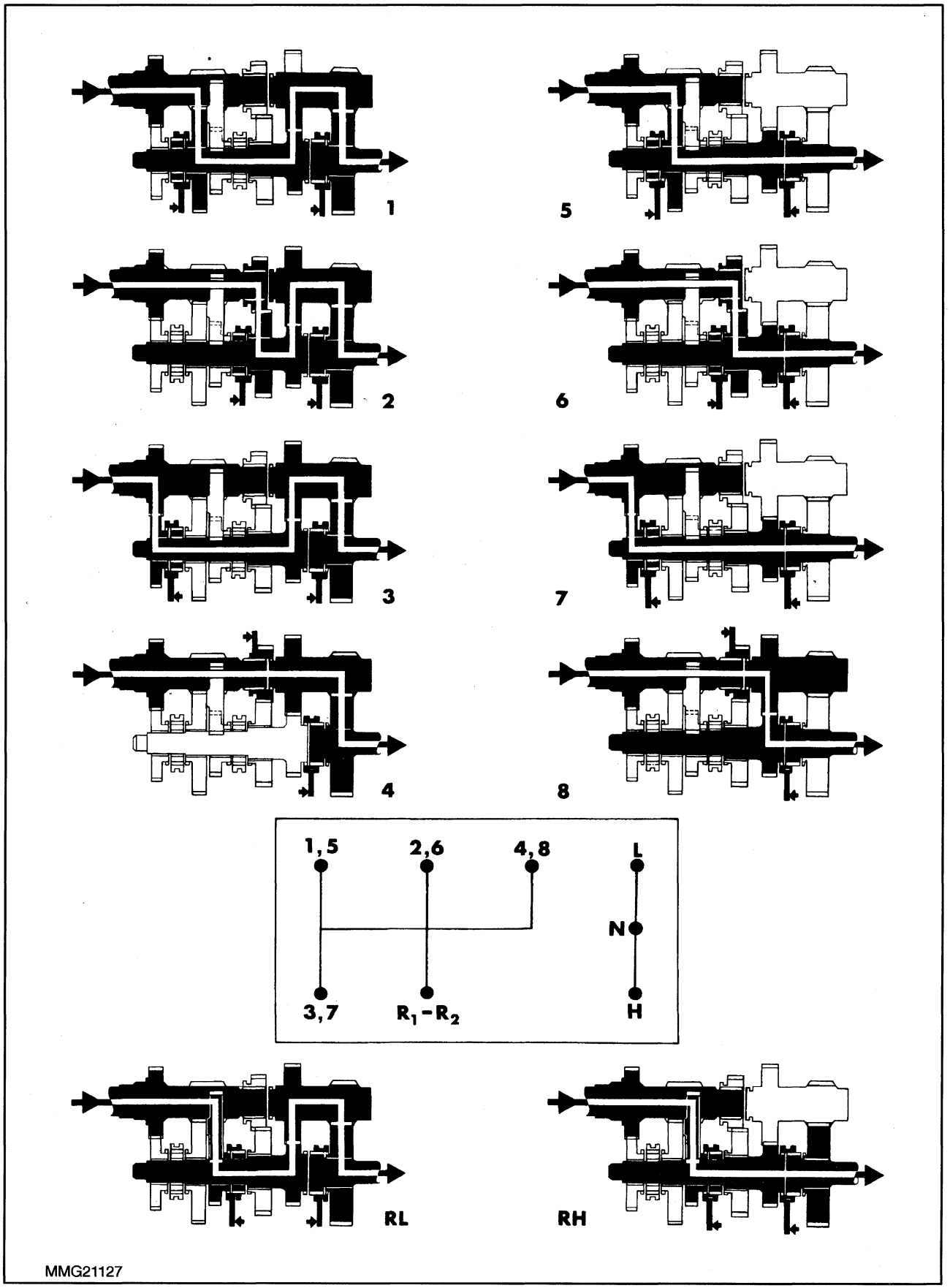

72

INTRODUCTION TO TRANSMISSION OVERHAUL

To assist in overhauling the transmission, the following notes on component accessibility should be noted:-

Components Accessible With Transmission Installed:

- Gear shift Levers
- Gear Shift Cover Assembly
- Start inhibitor Switch

Components Accessible With Engine Removed Only:

All items above, plus the following,

- Clutch assembly
- Clutch release shaft, fork and bearing assembly
- Main Input Shaft
- Front upper and lower shaft front bearings
- Front end oil seal

Components Accessible With Transmission Removed:

All items above, plus the following,

- Rear cover assembly
- PTO drive shaft
- Selector rails, forks, detent components and interlocks
- Output shaft assembly
- Range cluster gear
- Front upper shaft components
- Front lower shaft components
- Reverse idler components

GEAR SHIFT LEVERS AND COVERS - OVERHAUL

REMOVAL

1. If the tractor is equipped with a cab, lift up the floor mats and remove the floor panel in order to gain access to the shift cover.

2. Place the gear shift levers in neutral.

3. Disconnect the Battery negative cable.

4. Disconnect the start inhibit switch wires from the harness connection.

5. Remove the gearshift cover retaining bolts and partially lift the cover from the transmission casing. With the cover raised, disconnect the start inhibit switch wires from the switch and remove the shift cover assembly from the transmission.

DISASSEMBLY

1. Remove the oil baffle plate retaining bolts from the underside of the shift cover and remove the plate and washers.

2. Unscrew and remove the gear shift lever knobs.

3. Use a hacksaw to partially cut the lever retaining snap rings. If possible place the gear shift lever into the jaws of a vice as close to the snap ring as possible. Then using a chisel, finally break off the rings. During this operation ensure the retaining rings are not dangerously ejected from the grooves on the levers. Slowly release the vice and remove the springs, ball retainers and levers.

NOTE: *There is no need to attempt to remove the lever locating pins in the cover assembly as the levers are slotted.*

INSPECTION

1. Wash the shift cover and shift lever assemblies in a suitable solvent and dry with a clean, lint free cloth or compressed air.

2. Inspect the shift cover for cracks or other damage. Renew the cover where necessary.

3. Inspect the shift lever ball seats and ends for wear and the lever locating pins in the cover. Renew the pins if worn or damaged. New pins should be pressed into the cover.

4. Inspect the lever retaining springs for cracks or distortion, also inspect the retaining snap ring grooves on the levers.

5. Inspect the safety start switch wiring harness for damage. Renew the harness if damaged.

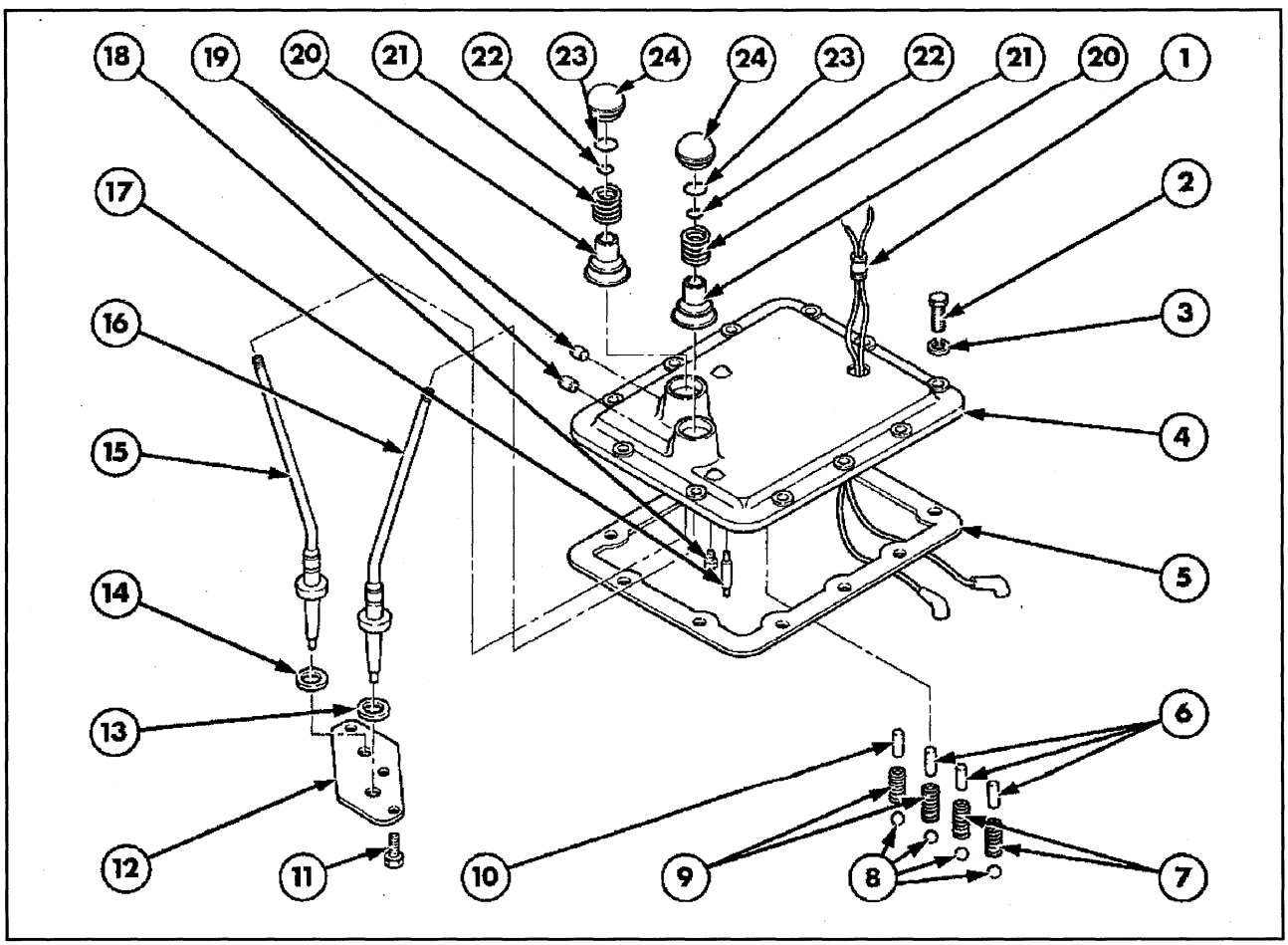

73

Top Cover Assembly

1. Start inhibitor Switch Wiring Harness
2. Shift Cover Bolt
3. Washer
4. Cover
5. Gasket
6. Pin
7. Spring
8. Ball
9. Spring
10. Pin
11. Baffle Plate Retaining Bolt - 3 off
12. Baffle Plate
13. Washer
14. Washer
15. Range (High/Low) Lever
16. Main Gear Lever
17. Pin, Start inhibitor switch
18. Dowel
19. Lever Locating Pins
20. Retainer
21. Lever Spring
22. Seal
23. Snap Ring
24. Gear Lever Knob

REASSEMBLY

1. Lubricate the ball seats with a good quality grease and pass the shift levers through the shift cover.
2. Assemble the ball retainers and springs, compress the springs and install new retaining snap rings.
3. Reassemble the two oil baffle washers to the underside of the shift cover, the oil baffle plate and the retaining bolts.

INSTALLATION

1. Install a new shift cover gasket to the cover assembly, hold in place with a suitable grease to aid assembly. Re-install the cover following the removal procedure in reverse, observing the following points:

- Ensure the start inhibit actuator housing is aligned with the locating pin in the shift cover.
- Tighten the cover retaining bolts to 41 lbf.ft (56 Nm).

START INHIBIT SWITCH

REMOVAL

1. Remove the shift cover as previously described.
2. Unscrew the start inhibitor switch from the housing.

INSPECTION

1. Inspect the start inhibitor switch for wear or damage. Renew as necessary.

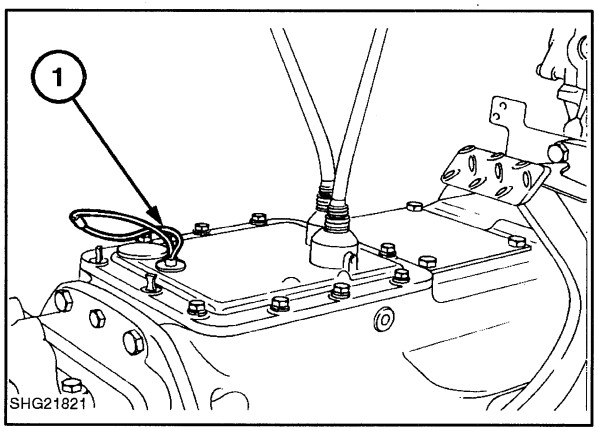

74

REASSEMBLY AND INSTALLATION

1. Reassembly and installation of the start inhibitor switch follows the removal procedure in reverse.
2. Test the switch operation by connecting a test bulb in series with the switch terminals and a battery. Move the switch actuator housing along the high/low shift rail and away from the centre line of the actuating dowel. The test bulb should only light when the actuator housing is centred over the actuating dowel.

NOTE: *Do not move the actuator housing more than 0.25 in (6 mm) from the actuating dowel centre line or the dowel may come out of the shift rail.*

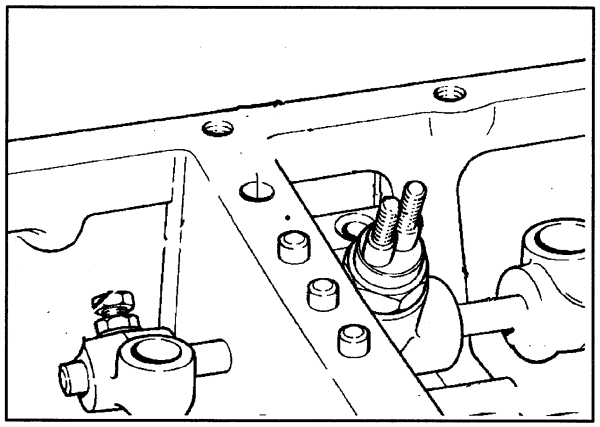

75

TRANSMISSION FRONT END - OVERHAUL

REMOVAL

1. Separate the engine from the transmission, see "SEPARATING THE TRACTOR" .
2. Remove the gear shift levers and cover as previously described in this Chapter.

DISASSEMBLY

1. Remove the clutch release fork retaining bolt (3), Figure 76 and withdraw the clutch release shaft (4) from the casing. Remove the clutch release fork (2) from the transmission. Slide the clutch release bearing and hub (1) from the clutch release hub support.

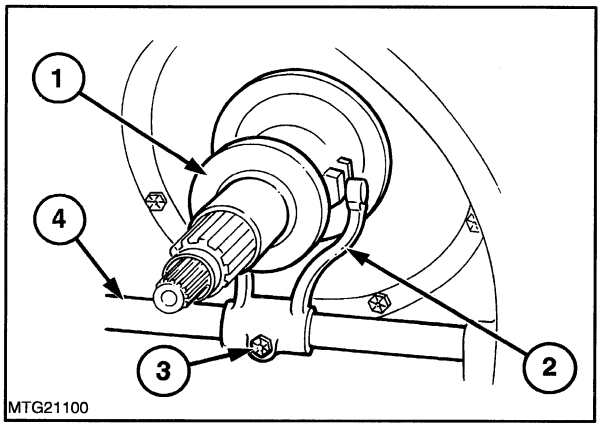

76

2. Transmissions With Dual Power: Disassemble the Dual Power unit as described in 8 × 2 Dual Power Section. Remove the Dual Power housing retaining bolts and lift the housing from the transmission casing. Take care not to lose the anti-spin washer located between the transmission mainshaft front gear and front bearing if the bearing comes away with the dual power housing.

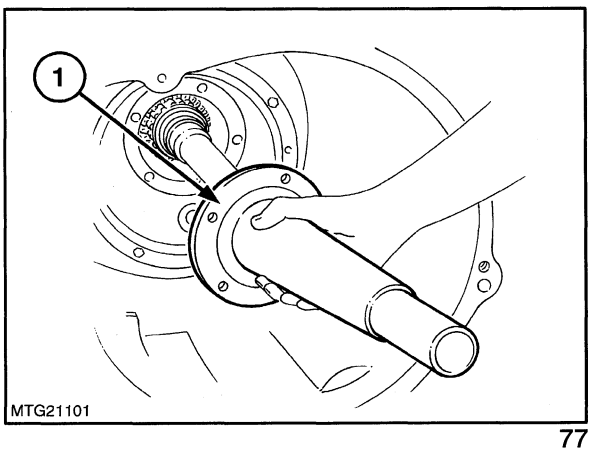

77

Transmissions Less Dual Power: Disconnect the low pressure lubrication lines from the clutch release bearing hub support and the front support plate. Remove the hub support (1), Figure 77. Remove the snap ring (1) retaining the main drive input shaft (2) to the transmission mainshaft, Figure 78 and withdraw the input shaft.

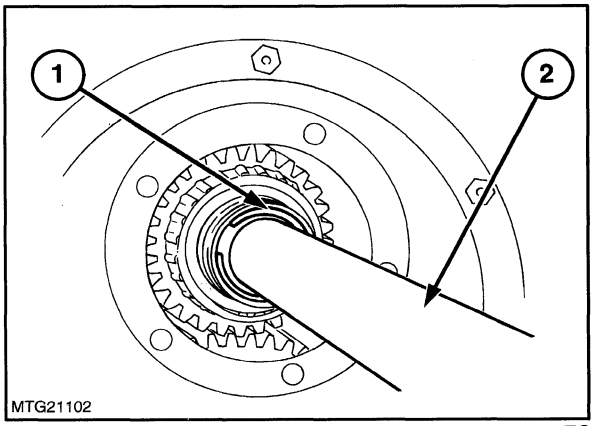

78

Input Shaft Retaining Snap Ring

1. Retaining Snap Ring
2. Main Drive Input Shaft

3. Remove the front support plate retaining bolts (2), Figure 79 and withdraw the plate (1) from the housing. If necessary, drive the plate from the housing using a suitable drift inserted into the main transmission compartment.

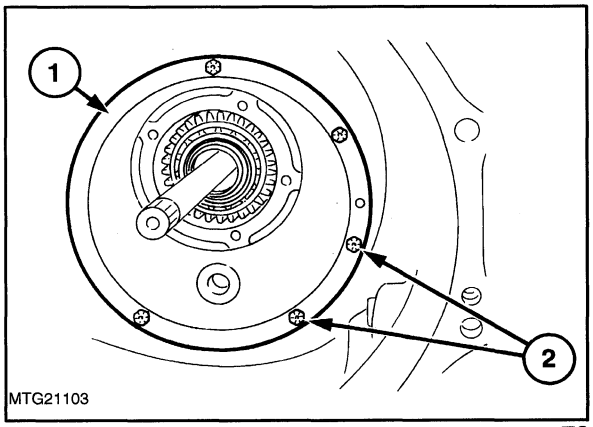

79

INSPECTION AND REPAIR

1. Inspect the clutch release components for wear, see "CLUTCHES" - Section 6.

   Transmission Less Dual Power: Inspect the mainshaft front oil seal located in the clutch release bearing hub support, and if necessary, use Slide Hammer, Tool No. FNH09567, to remove the seal. Use a Step Plate, Tool No. FNH09210 and sleeve of suitable diameter to install a new seal, with the sealing lip facing rearwards. Lubricate the sealing lip with a suitable grease prior to installation.

2. Examine the main drive input shaft and retaining snap ring and replace if worn or damaged.
3. Inspect the main countershaft front bearing and if worn or damaged, use puller, tool No. FNH09196 (2) and a shaft protector, tool No. FNH09212, (3) to remove the bearing (1) from the shaft, Figure 80.

   Use a sleeve of 1.25 in (32mm) internal diameter and 1.62 in (41mm) external diameter to install a new bearing onto the countershaft.

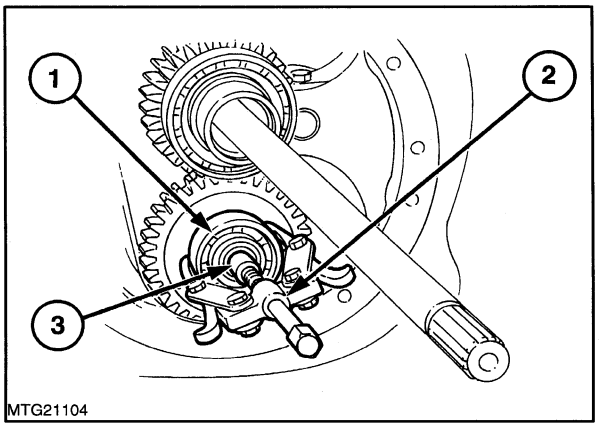

80

RE-ASSEMBLY

1. Install the front support plate to the transmission case using a new gasket. If necessary, lift the mainshaft and main countershaft to align the countershaft front bearing. Install the retaining bolts and tighten to 32 lbf.ft (44 Nm).

   Transmissions With Dual Power: Re-assemble the Dual Power components as detailed in the 8 × 2 Dual Power Section.

NOTE: *Ensure the anti-spin washer (2) is installed between the mainshaft front gear (3) and front bearing (1)if the bearing has come away with the dual power unit during disassembly. If the bearing has remained on the mainshaft, coat the outer edge of the bearing with a suitable adhesive, such as New Holland stud and bearing lock, Part Number 82995772, (5), to ensure the bearing does not rotate in the dual power housing, prior to reassembly, Figure 81.*

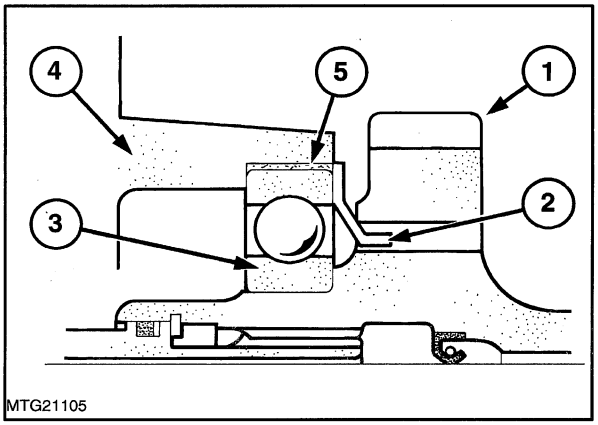

81

   Transmission Less Dual Power: Install the main drive input shaft into the forward end of the transmission mainshaft and secure with the snap ring. Place studs in two of the five bolt holes to ensure correct alignment of the clutch release hub on assembly. This will prevent damage to the release hub oil seal. Position a new gasket on the front support plate and slide the clutch release hub support over the studs. Drive the support into position with the drain hole downwards. Remove the studs, install the retaining bolts and tighten to 49 lbf.ft (67 Nm).
2. Install the clutch release bearing and hub assembly onto the hub support.
3. Locate the release fork fingers into the slots in the hub and install the release shaft through the casing and release fork. Install the fork retaining bolt and tighten to 35 lbf.ft (47 Nm).

COMPLETE TRANSMISSION OVERHAUL

DISASSEMBLY

1. Remove the clutch operating mechanism, clutch release hub support, Dual Power transmission (where fitted), front support plate and main drive input shaft assembly as previously described in this Chapter.
2. Remove the shift levers and cover assembly as previously outlined in this Chapter, together with the start inhibitor switch from the high/low shift rail.
3. Remove the snap ring (4), the thrust washer (3) and the hydraulic pump idler gear (2), located on the output shaft retainer, Figure 82.

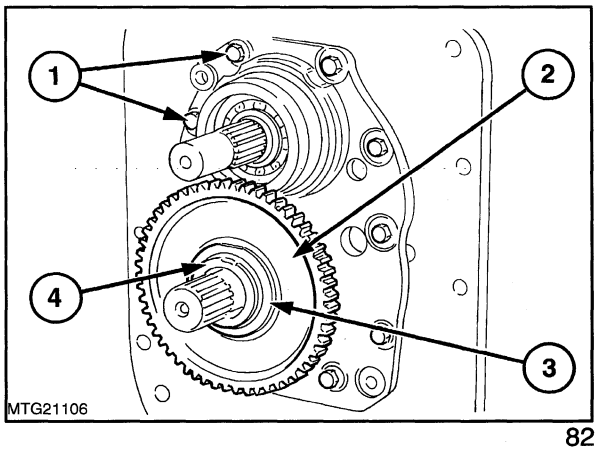

82

4. Remove the rear support plate retaining bolts (1), Figure 82 and using a soft faced mallet drive the forward end of the P.T.O. drive shaft rearwards. This will separate the rear support plate (1) from the transmission casing. If necessary, lever the rear support plate from the casing and withdraw the plate complete with the P.T.O. drive shaft (4), Figure 83.
5. Remove the snap ring (2) retaining the P.T.O. drive shaft rear bearing (5) and drive the shaft and bearing out of the support plate.
6. Remove the bolts securing the output shaft retainer to the rear support plate and withdraw the retainer (3) Figure 83 and shims from the rear support plate.

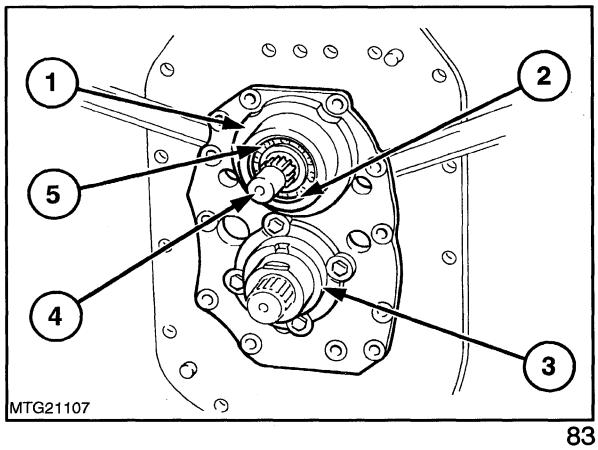

83

7. Partially withdraw the secondary countershaft assembly (1) until the front bearing is out of the location. Lift the secondary countershaft to allow the output shaft assembly (2) to be removed from the rear compartment, Figure 84, followed by removal of the secondary countershaft.

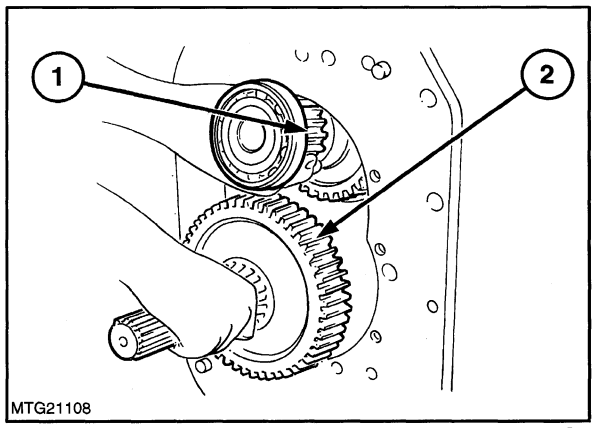

84

8. Remove the high/low sliding coupling (2) from the rear of the main countershaft, Figure 85.

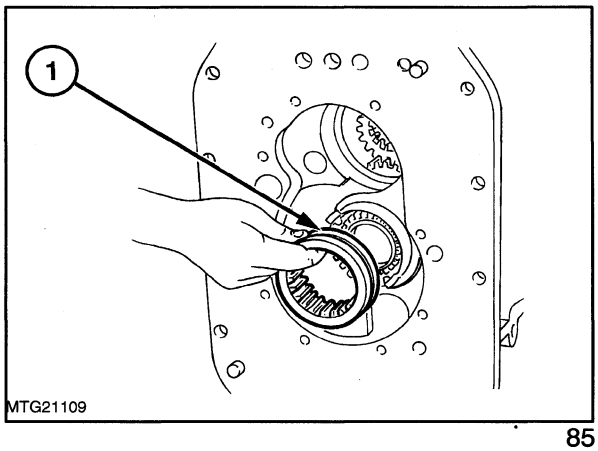

85

GEAR SHIFT MECHANISM

1. Remove the four detent plungers (1) and springs (2). The detent balls (3) located below the springs should be collected as each shift rail is removed, Figure 86.

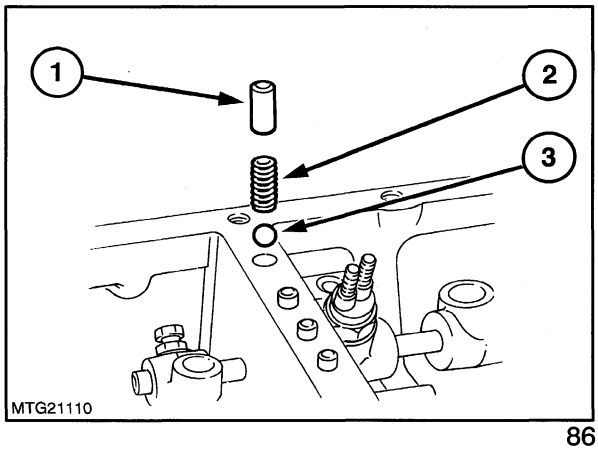

86

2. Unscrew the start inhibitor switch (5) from the housing. Loosen the locknut and remove the bolt locking the high/low range fork (6) to the shaft. Remove the range lever connector (4) from the shaft and slide the rail out from the rear of the gearbox. Place a clean cloth beneath the start inhibitor switch actuator housing. Take care to ensure the ball, spring and actuating dowel are collected from the housing and rail. Lift the high/low shift fork from the rear compartment.

3. Unscrew the locknut and retaining screw from the 1st-5th/3rd-7th shift fork (3) at the front of the shift rail. Drive the rail forward from the transmission casing pushing the sealing plug out with the end of the rail. Remove the shift connector and fork.

4. Unscrew the locknut and retaining screws from the 4th-8th shift fork (8) and connector (1) and push the shift rail rearwards from the transmission case. Remove the fork and the connector.

5. Unscrew the locknut and retaining screw from the Reverse/2nd-6th shift arm (2) and connector and slide the top rail out rearwards. Lift the shift arm and the connector from the transmission case.

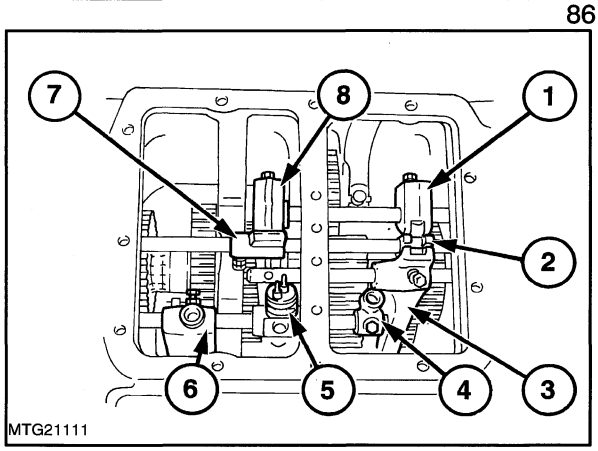

87

6. Remove the locknut and screw (1) retaining the Reverse/2nd-6th shift fork to the lower shift rail (4), Figure 88 and push out the rail rearwards. Remove the shift fork from the transmission casing.
7. Remove the interlock plungers from the cross bore in the transmission case. If necessary, remove the bore plug situated on the left-hand side of the case to facilitate removal of the plungers.

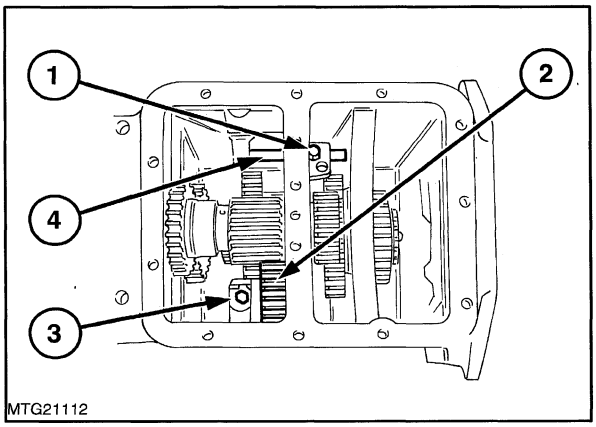

88

REVERSE IDLER ASSEMBLY

1. Bend down the locktab and remove the bolt (3) retaining the reverse idler shaft to the transmission case, Figure 88.

2. Drive the shaft out forwards and lift out the reverse idler gear (2).

MAINSHAFT ASSEMBLY

1. Position a Step Plate, Tool No. FNH09210, in the bore at the rear of the mainshaft.

2. Drive the shaft forwards, using a suitable drift, from the transmission case and remove the 4th-8th coupling gear.

MAIN COUNTERSHAFT ASSEMBLY

1. If not previously removed, use puller, tool No. FNH09196 and step plate, tool No. FNH09210, to remove the main countershaft front bearing. remove the snap ring (4) located behind the bearing, Figure 89 and remove the thrust washer (2).

2. Withdraw the main countershaft (3) rearwards removing the gears (1), couplings and thrust washer. Store these components in the order of removal to aid correct re-assembly.

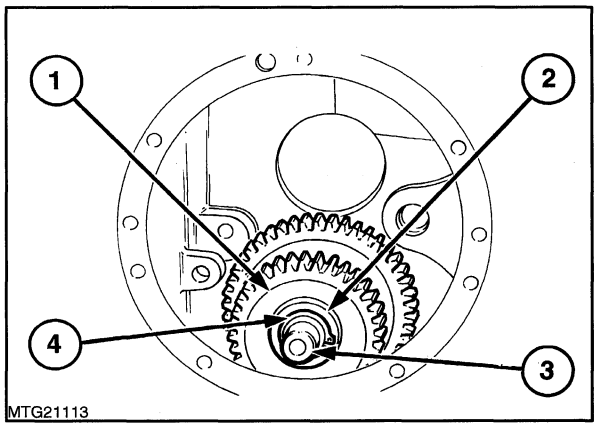

89

NOTE: *The inner and outer sections of the sliding couplings are matched in manufacture and should not be separated.*

INSPECTION AND REPAIR

REAR END COMPONENTS

1. Inspect the P.T.O. drive shaft and bearing assembly. If the bearing is worn or damaged, use Puller, Tool No. FNH09516, Pulling Attachment, Tool No. FNH09190 and Shaft Protector, Tool No. FNH09212, to effect removal. Use a convenient length of sleeve 1.44 in. (37 mm) internal diameter and 1.75 (44 mm) external diameter to install a new bearing.

2. Inspect the output shaft retainer and rear bearing cup for wear or damage. If necessary, remove the cup from the retainer using a suitable punch.

   Use Step Plate, Tool No. FNH09210 and a suitable punch to install the new bearing cup.

3. Examine the output shaft assembly for wear or damage. If necessary, use Puller, Tool No. FNH09198 (1), Puller Adaptor, Tool No. FNH09190 (2) and Shaft Protector, Tool No. FNH09212 (4), to remove the front pilot bearing cone and roller assembly (3), Figure 90.

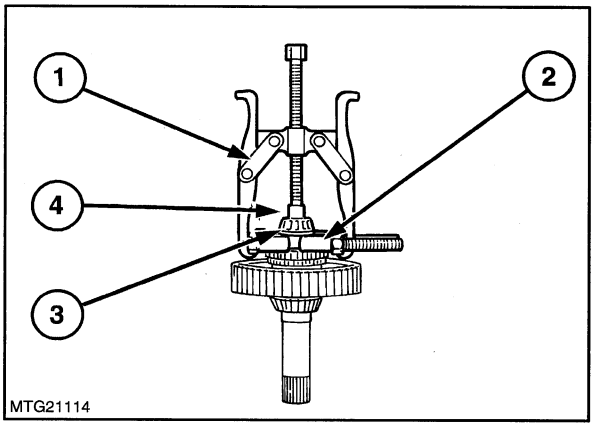

90

4. Use Puller, Tool No. FNH09516 (1) and Shaft Protector, Tool No. FNH09212 (4), to remove the gear (2), rear bearing (3) and thrust washer in one operation, Figure 91.

5. Inspect the output gear bushing for wear and replace the gear and bushing assembly if necessary.

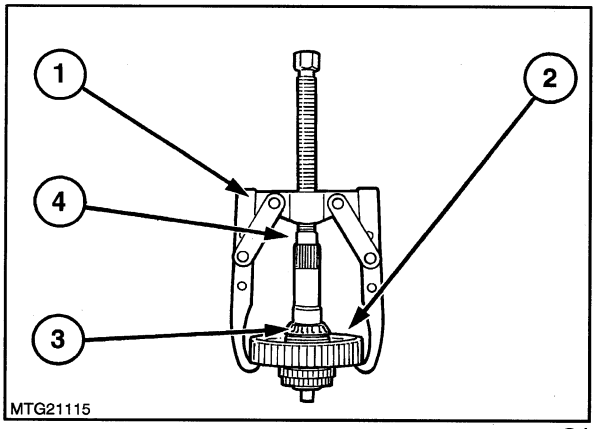

91

6. Install the steel thrust washer aligning the flats on the washer with the flats on the shaft and position the rear bearing on the output shaft, Figure 102, page 6-263. component E. Use Puller, Tool No. FNH09516 (1), Pulling Attachment, Tool No. FNH09526 (3), Shaft Protector, Tool No. FNH09212 (5) and a suitable sleeve of 1.5 in. (40 mm) internal diameter, 2.00 in. (50 mm) external diameter (2), to pull the bearing (4) into position, Figure 92.

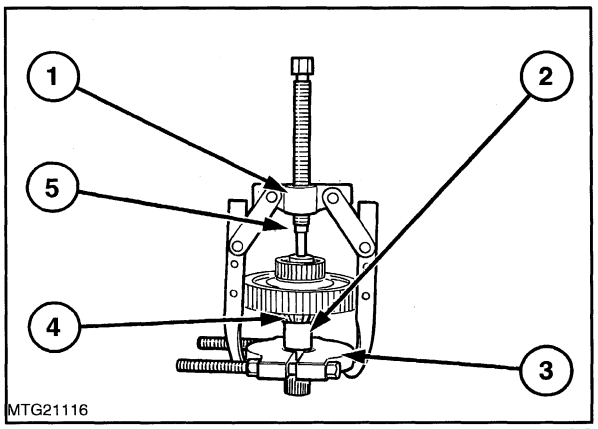

92

7. Inspect the secondary countershaft assembly for wear or damage. If necessary, use Puller, Tool No. FNH09516, Pulling Attachment, Tool No. FNH09526 and Step Plate, Tool No. FNH09210, to remove the rear bearing (4).
8. If necessary, remove the secondary countershaft front bearing (2) using two steel rods (5) 0.18 in. (48 mm) diameter and 2.0 in. (50 mm) long inserted through the two holes in the driving gear. Use Puller, Tool No. FNH09516 (1), Pulling Attachment, Tool No. FNH09190 (3) and Step Plate, Tool No. FNH09210 (6), to push the bearing from the countershaft, Figure 93.
9. Use Puller, Tool No. FNH09516, Pulling Attachment, Tool No. FNH09190 and Step Plate, Tool No. FNH09210, to install both front and rear bearings.

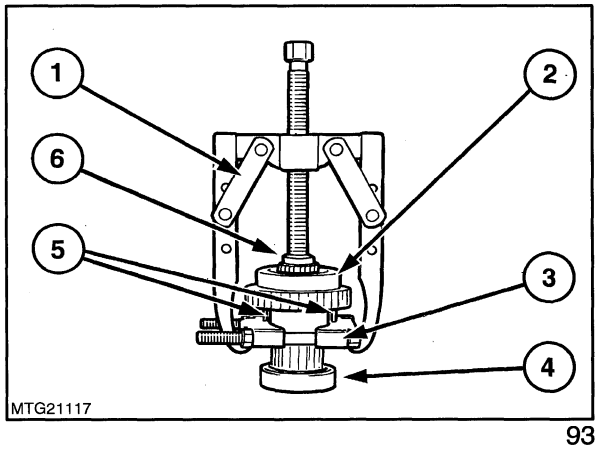

93

MAINSHAFT ASSEMBLY

1. Inspect the mainshaft assembly, the front and rear bearings and P.T.O. drive shaft oil seal located inside the forward end of the shaft.
2. If necessary, use Puller, Tool No. FNH09516 (1), Pulling Attachment, Tool No. FNH09190 (2), to remove the mainshaft rear bearing (3), Figure 94. If necessary, remove the front bearing using two pieces of steel rod 0.18 in. (4.8 mm) diameter and 2.0 in. (50 mm) long inserted through the two holes in the main driving gear together with Puller, Tool No. FNH09516, Pulling Attachment, Tool No. FNH09190 and Step Plate, Tool No. FNH09210 (4).
3. Use Puller, Tool No. FNH09516, Pulling Attachment, Tool No. FNH09526 and Step Plate, Tool No. FNH09210 to install a new rear bearing. A new front bearing should be installed using the above tools together with a sleeve 2.5 in. (64 mm) internal diameter and 3.0 in. (76 mm) external diameter of convenient length.

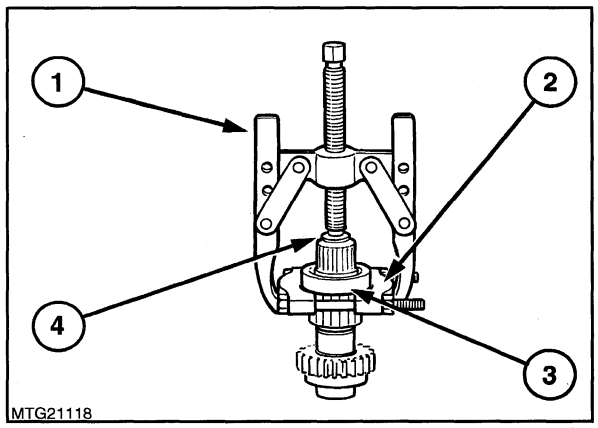

94

4. When removing and installing the mainshaft front bearing of transmissions installed with Dual power, note that there is an anti-spin washer between the mainshaft front gear and bearing assembly. Ensure the washer is in good condition prior to reassembly.
5. Inspect the P.T.O. drive shaft oil seal located within the mainshaft and remove if worn or damaged. Install a new seal, after lightly greasing the sealing lip, with the sealing lip facing rearwards. Use a Step Plate, Tool No. FNH09210 and sleeve of convenient size to drive the seal into location.

MAIN COUNTERSHAFT ASSEMBLY

1. Inspect the main countershaft assembly and if necessary, use Puller, Tool No. FNH09506 (1), puller legs, Tool No. FNH09521 (6), Ratchet, Tool No. FNH09162 (2), Pulling Attachment, Tool No. FNH09526 (3) and Shaft Protector, Tool No. FNH09212 (5), to pull the rear bearing (4) from the countershaft, Figure 95.

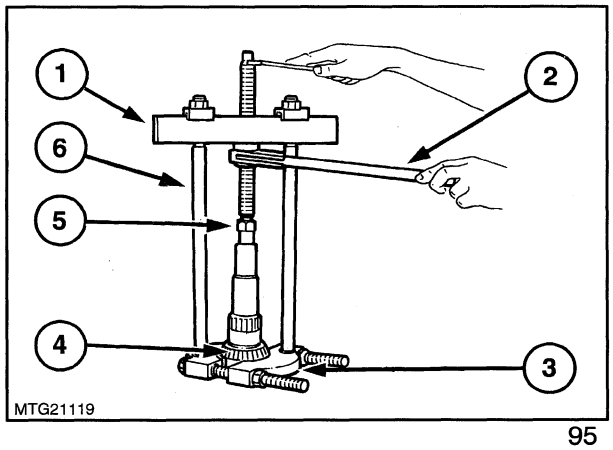

95

2. Examine the output shaft pilot bearing cup located in the end of the main countershaft (1). If necessary, remove the bearing cup using a suitable punch (2) inserted through the two holes in the gear (3), Figure 96.
3. Use a suitable Step Plate, Tool No. FNH09210 and Puller, Tool No. FNH09516, to install a new output shaft pilot bearing cup into the rear of the main countershaft.

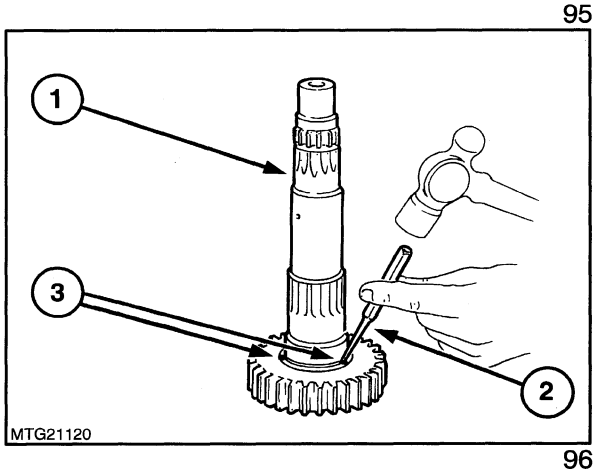

96

4. Use Puller, Tool No. FNH09516 (1), Pulling Attachment, Tool No. FNH09526 (3), Step Plate, Tool No. FNH09210 (5) and a sleeve 2.00 in. (50 mm) internal diameter and 3.21 in. (58 mm) external diameter of convenient length (4), to install a new rear bearing (2) onto the main countershaft, Figure 97.

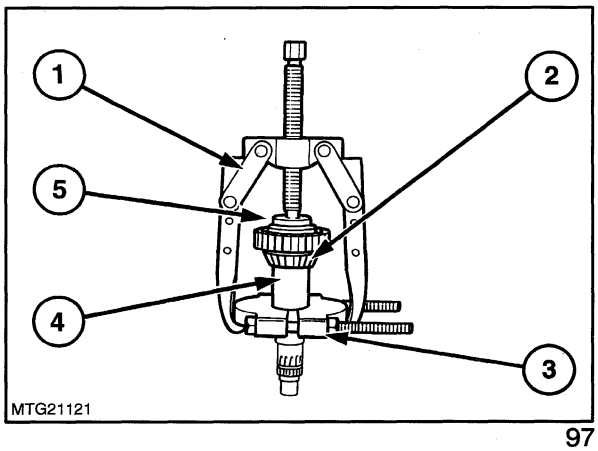

97

5. Inspect all gears which are mounted on the main countershaft for damage and wear. Mount the gears on the countershaft and check the bushings for free play. If any gear or bushing is worn, a new gear and bushing assembly must be installed. Similarly, examine the reverse idler gear and bushing assembly and replace if necessary.
6. Inspect the main countershaft rear bearing cup (1) situated in the transmission case and if damaged or worn, use Slide Hammer, Tool No. FNH09567 (2), to effect removal, Figure 98. Install a new cup using a suitable drift.

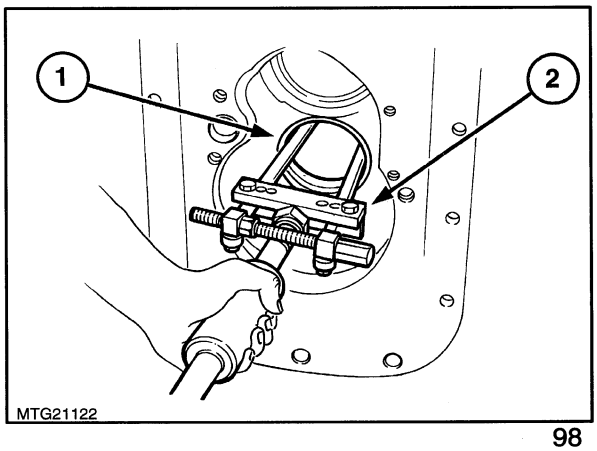

98

7. Examine the countershaft front bearing, previously removed from the front of the countershaft, for wear and damage. If necessary, install a new bearing on re-assembly.
8. Inspect all components with internal splines, external splines or gear teeth and if worn or damaged, replace on re-assembly. Ensure the lubrication oil drillings in the main countershaft are free from obstruction.

GEAR SHIFT MECHANISM

1. Check the gear shift forks, rails, arms and connectors for wear or distortion. Examine the detent on the shift rails and replace the shift rail if the detents are worn.

2. Renew all worn and damaged components.

TRANSMISSION CASE

1. Wash out the transmission case with a suitable solvent to remove all particles of metal and dirt. Dry with a clean, lint free cloth or compressed air.

2. Inspect the case for cracks or other damage and if beyond repair, re-assemble the transmission components into a new case.

RE-ASSEMBLY, Refer to Figure 102 during transmission re-assembly unless otherwise stated.

MAIN COUNTERSHAFT ASSEMBLY

1. Pass the main countershaft through the rear compartment and assemble the gears in the following sequence:

   a) 2nd-6th Gear (dog-teeth forward).

   b) Reverse/2nd-6th sliding coupling and connector.*

   c) Phosphor-bronze thrust washer.

   d) Reverse gear (dog-teeth rearward).

   e) Phosphor-bronze thrust washer.

   f) 1st-5th Gear (dog-teeth forward).

   g) 3rd-7th/1st-5th Sliding coupling and connector.*

   h) 3rd-7th Gear (dog-teeth rearward).

   i) Thrust washer

   j) Snap ring.

   k) Front bearing.

*** NOTE:** *These connectors have a chamfer on one side of the inside diameter. This chamfer must face the rear of the transmission to allow the connector to seat correctly on the main countershaft splines. The sliding coupling and connector are matched in manufacture and should be installed with the etched marks aligned.*

2. Support the main countershaft during reassembly and ensure the rear bearing is seated squarely in the bearing outer track.

3. Position the high/low sliding coupling on the rear of the main countershaft.

MAINSHAFT ASSEMBLY

1. Ensure the snap ring retaining the mainshaft rear bearing is in position in the transmission casing.

2. Install the 4th-8th coupling gear on the rear of the mainshaft with the shift fork groove to the front.

3. Position the mainshaft assembly in the transmission casing.

4. Drive the mainshaft assembly rearwards to seat the rear bearing in the location within the casing.

REVERSE IDLER ASSEMBLY

1. Position the reverse idler gear (1) between the supporting lugs, Figure 99, with the extended hub of the gear towards the front of the transmission.

2. Install the reverse idler shaft from the rear compartment with the retaining bolt hole forwards. Install the retaining bolt (2) and locktab, tighten the bolt to 17 lbf.ft (24 Nm) and bend up the locktab.

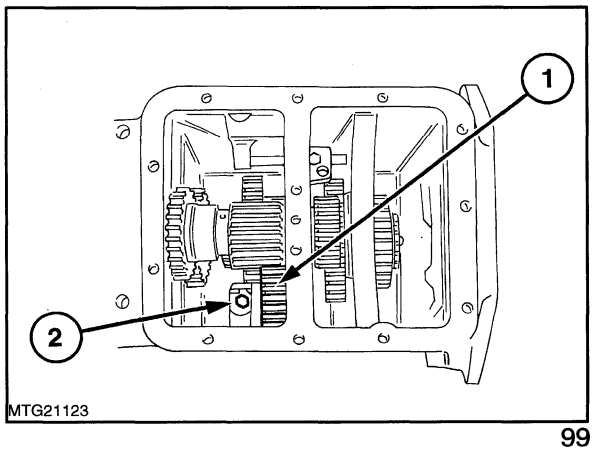

99

GEAR SHIFT MECHANISM

1. Locate the Reverse/2nd-6th shift fork (4) onto the appropriate sliding coupling on the main countershaft and install the lower shift rail (5) from the rear compartment with the fork retaining hole to the rear of the shift rail, Figure 100. Install the fork retaining screw and lock nut then tighten the screw to 23 lbf.ft (31 Nm). Secure with the lock nut.

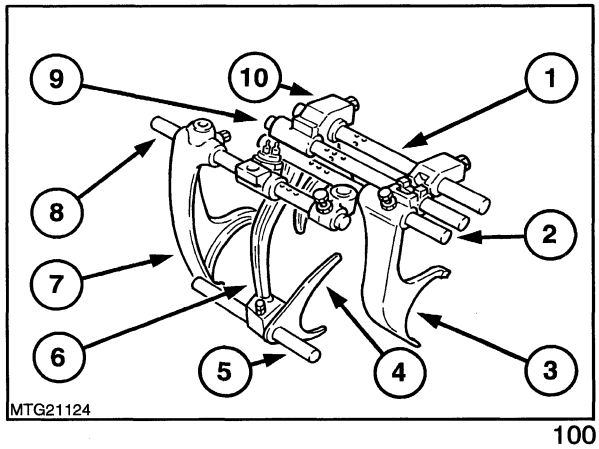

100

2. Insert the two interlock plungers into the bore from the left-hand side of the transmission case and install the screwed plug. Position each plunger between the three shift rail bores.

3. Position the 4th-8th shift fork (10) on the sliding coupling. Install the shift rail (1) from the rear, with the oil relief groove rearwards and pass through the bore in the shift fork. Install the retaining screw and locknut and tighten to 23 lbf.ft (31 Nm).

NOTE: *When installing the remaining top shift rails, ensure the rails already installed are in the neutral position so the interlock plungers do not prevent the rail from entering the front support bore.*

4. Position the lower end of the Reverse/2nd-6th shift arm (6) into the locating hole in the Reverse/2nd-6th shift fork (4). Pass the Reverse/2nd-6th top shift rail (9) in from the rear with the oil relief groove rearwards. With the shift rail correctly located in the shift arm, install the retaining screw and locknut then tighten to 23 lbf.ft (31 Nm).

5. Position the 1st-5th/3rd-7th shift fork (3) in the sliding coupling located at the front of the main countershaft. Install the 1st-5th/3rd-7th shift rail (2) from the front of the transmission. Correctly locate the rail in the shift fork and secure with the retaining screw. Install the shift connector to the rear of the rail and secure with the retaining screw. Tighten the retaining screws and lock nuts to 23 lbf.ft (31 Nm). Install the sealing plug at the front of the rail.
6. Position the high/low shift fork (7) in the groove of the high/low sliding coupling located on the output shaft. Install the high/low shift rail (8) and correctly locate in the shift fork. Secure the shift fork with the retaining screw and tighten the screw and lock nut to 23 lbf.ft (31 Nm).
7. Install the four shift rail detent balls, springs and plungers. Ensure the balls and plungers slide freely in the bores.

NOTE: *The shorter plunger is located in the vertical bore above the high/low shift rail.*

REAR END COMPONENTS

1. Ensure the snap ring located immediately in front of the secondary countershaft front bearing is in position in the transmission casing bore.
2. Place the secondary countershaft assembly in the approximate location and hold the assembly at the top of the rear compartment whilst the output shaft assembly is installed. Align the secondary countershaft and drive forwards until the front bearing seats against the locating snap ring in the transmission case.
3. Locate the rear support plate, less the output shaft retainer assembly, on the transmission rear face. Drive the plate into position on the dowels then install the retaining bolts and tighten to 32 lbf.ft (44 Nm).
4. Install the P.T.O. drive shaft and rear bearing through the transmission from the rear and use a soft-faced mallet to drive the shaft and bearing into position. Secure the rear bearing with the snap ring.
5. To obtain the specified end play in the output shaft taper roller bearings, shims of appropriate thickness have to be installed between the rear support plate and the output shaft bearing retainer according to the following procedure:

(i) Install shims to a thickness of approximately 0.06 in. (1.6 mm) and locate the output shaft bearing retainer assembly on the rear support plate.

(ii) Install the four retaining bolts and tighten to 32 lbf.ft (44 Nm).

(iii) Position the plunger of a dial indicator gauge (3) against the end face of the output shaft (2), Figure 101. Lever the shaft in and out and note the end play reading. If no end play is registered, add additional shims to produce a gauge reading.

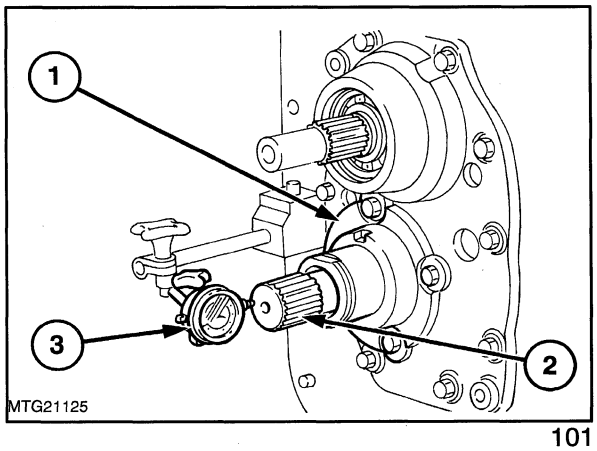

101

(iv) Remove the indicator gauge and the four retainer bolts. Withdraw the retainer (1) and shims.

(v) Remove a number of shims to obtain an end float between 0.0015 in (0.038 mm) and 0.0034 (0.086 mm)

NOTE: *Shims are available in thicknesses of 0.003 in., 0.005 in. and 0.012 in. (0.076 mm, 0.127 mm and 0.305 mm).*

(vi) Having selected the correct shims, install the bearing retainer, with the oil slot to the top, shims and bolts. Tighten the bolts to 32 lbf.ft (44 Nm). Re-position the dial indicator gauge and re-check for end play.

6. Install the hydraulic pump idler gear, thrust washer and snap ring.

Re-assembly of the front end components follows the procedure detailed in the Section Transmission Front End-Overhaul of this Chapter.

Installation of the shift levers and cover and the start inhibitor switch follows the procedure detailed in the Gear Shift Levers and Cover Overhaul Section of this Chapter.

INSTALLATION

1. Re-connect the transmission to the engine and rear axle, see "SEPARATING THE TRACTOR".

2. Refill the transmission/rear axle with the correct grade and quantity of oil, Ambra Multi-G meeting New Holland specification NH 410 B.

Key to 102

Transmission Components

A - Input Shaft Assembly

1. Clutch Release Bearing Hub Support
2. 'O' Ring Seal
3. Input Shaft Seal
4. Input Shaft Retaining Clip
5. Seal
6. Input Shaft
7. Seal

B - Top Shaft (Mainshaft)

1. Input Cluster Gear Front Bearing
2. Anti-Spin Washer - With Dual Power Only
3. Input Cluster Gear
4. Input Cluster Gear Rear Bearing
5. Casing Snap Ring
6. 4th-8th Connector Gear

C - Secondary Countershaft (Range Cluster)

1. Casing Snap Ring
2. Secondary Countershaft Front Bearing
3. Secondary Countershaft Gear Cluster
4. Secondary Countershaft Rear Bearing

D - Main Countershaft

1. Main Countershaft Front Bearing
2. Snap Ring
3. Washer
4. 3rd - 7th Gear
5. Coupling Matched With Connector, item 6
6. Connector Matched With Coupling, Item 5
7. 1st - 5th Gear
8. Washer
9. Reverse Gear
10. Washer
11. Coupling Matched With Connector, Item 12
12. Connector Matched With Coupling, Item 11
13. 2nd - 6th Gear
14. Bearing Outer Cup
15. Taper Bearing
16. Countershaft
17. Bearing Outer Cup

E - Output Shaft Assembly

1. Taper Bearing
2. Lube Oil Transfer Tube
3. High/Low range Coupling
4. Output Shaft
5. Low Range Gear
6. Thrust Washer
7. Taper Bearing

F - End Cover Assembly

1. Snap Ring
2. Snap Ring
3. P.T.O. Shaft Bearing
4. Snap Ring
5. P.T.O. Shaft
6. Bearing Outer Cup
7. End Cover
8. Shims
9. Output Shaft Retainer

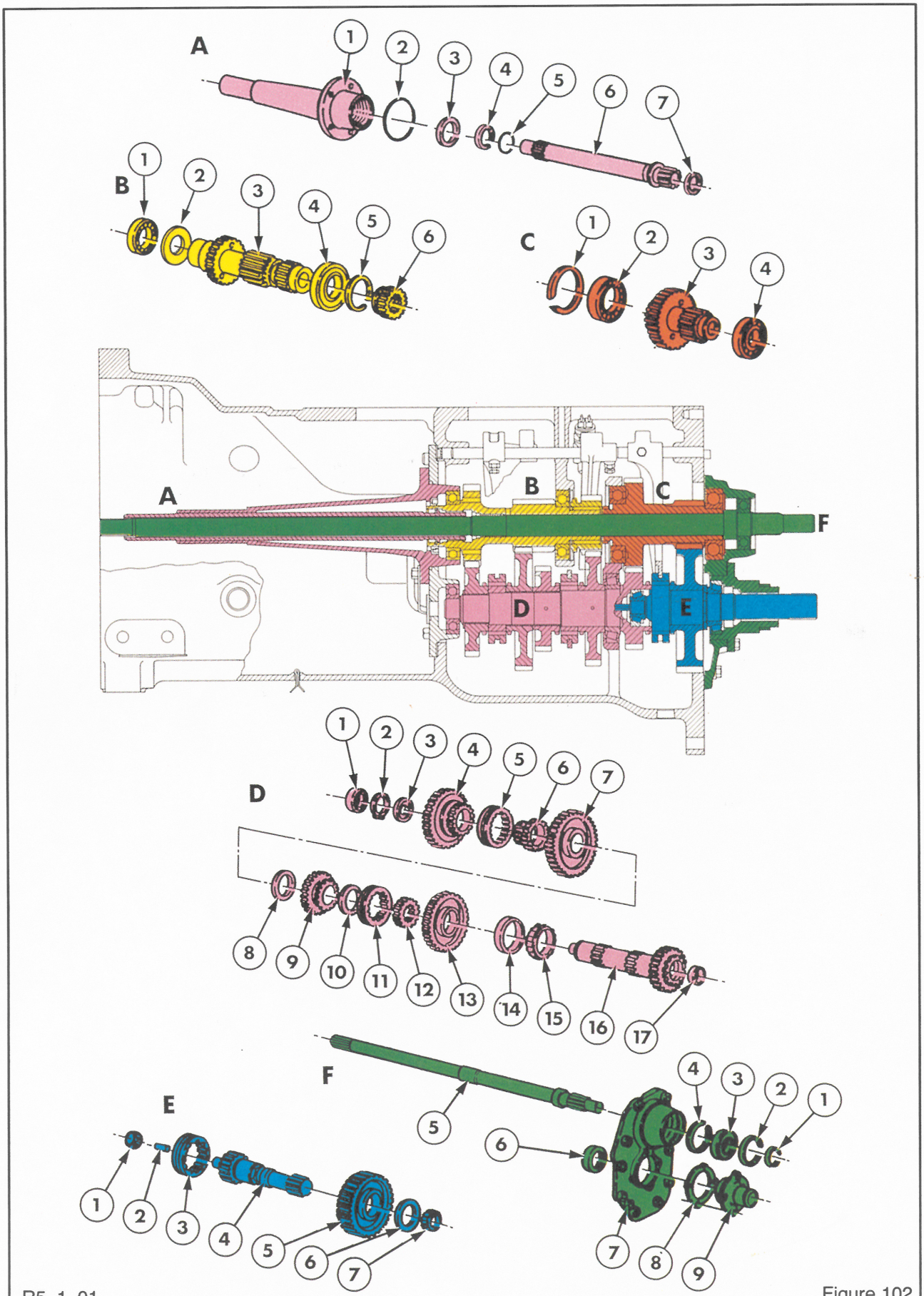

R5-1-01

Figure 102

16 × 4 DUAL COMMAND TRANSMISSION

SPECIFICATIONS, TIGHTENING TORQUES AND SPECIAL TOOLS

SPECIFICATIONS

Planetary Gear Set Free Play	0.004-0.020 in (0.10-0.51 mm)	
Planetary Gear Set Free Play Shims Available	0.013 in. (0.33 mm) 0.032 in. (0.81 mm)	
Planetary Cover to Housing Shimming Gap	0.046-0.060 in. (1.17-1.52 mm)	
Planetary Gear Set Free Play Shimming Chart	Average Planetary cover to Housing Gap 0.001-0.013 in. (0.025-0.33mm) 0.014-0.026in. (0.34-0.66mm) 0.027-0.032in. (0.67-0.81mm) 0.033-0.045in. (0.82-1.14 mm) 0.046-0.0060in. (1.15-1.52mm)	Shim Thickness to be added 0.045in. (1.14mm) 0.032in. (0.81mm) 0.026in. (0.66mm) 0.013in. (0.33mm) None
Dual Command System Pressures	220-260 lbf.in^2 (15.2-17.9 bar)	
Lubrication System Pressure	Run lubrication pressure test, a pressure within the following range should be recorded. 73-123 lbf.in^2 (5.0-8.5 bar)	

TIGHTENING TORQUES

Components	lbf.ft	Nm
Control Valve Spool Plug	28	38
Control Valve Body Retaining Bolts	32	44
Planetary Housing Retaining Bolts	77	105
Planetary Cover Retaining Bolts	35	47
Lubrication Tube Connector	13	17.5
Pressure Line Control Tube Connector	9	12

SPECIAL TOOLS

Description	V.L. Churchill Ltd Tools	Nuday Tools	FNH
Slide Hammer	MS.284	9567 (943S)	FNH 09567
Step Plates	630S	9210 (630S)	FNH 09210
PTO Clutch Compressor	N-775	1312 (N-775)	FNH 01312
Puller Legs	930B	9521 (930B)	FNH 09521
Puller	938	9506 (938)	FNH 09506
Internal / External Puller	943	9507 (943)	FNH 09507
Slide Hammer	943S	9567 (943S)	FNH 09567
Pulling Attachment			
Small	951	9190 (6951)	FNH 09190
Large	952	9526 (962)	FNH 09526
Puller			
Medium	1002	9198 (1002)	FNH 09198
Large	1003	9516 (1003)	FNH 09516
Spacer Gauge - Dual Command	FT.5000(SW523)	1303 (SW523)	FNH 01303
Planetary Shaft Puller	FT.5004	4721	FNH 04721
Pressure Gauge	FT.8616	FNH 06653	
Adaptor	FT.8503	FNH 00705	

FAULT FINDING

IMPORTANT: *Whenever effecting a repair the reason for the cause of the concern must be investigated and corrected to avoid repeat failures.*

The following table lists problems and their possible causes with recommended remedial action.

PROBLEM	POSSIBLE CAUSE	REMEDY
Dual Command system pressure below specification in normal drive only	1. Direct drive clutch snap ring displaced	1. Replace snap ring and other damaged parts
	2. Damaged or leaking control valve body gasket	2. Replace gasket
	3. Leaking sealing rings on direct drive clutch housing hub or worn Dual Command housing	3. Replace sealing rings and/or Dual Command housing
	4. Leaking inner or outer seals on direct drive clutch piston	4. Replace seals
	5. Broken or cracked direct drive clutch piston or housing	5. Replace piston or housing
Dual Command system pressure below specification in power drive only	1. Damaged or leaking control valve body gasket	1. Replace gasket
	2. Leaking inner or outer seals on under drive clutch piston	2. Replace seals
	3. Broken or cracked underdrive clutch piston	3. Replace piston
Dual Command system pressure below specification in both normal drive and power drive	1. Fault in low pressure hydraulic circuit	1. Refer to Hydraulic Systems, Pressure Testing, Section 4.
Dual Command system pressure above specification in both normal drive and power drive	1. Fault in low pressure hydraulic circuit	1. Refer to Hydraulic Systems, Pressure Testing, Section 4.
No power to rear wheels when normal drive engaged (power drive operative)	1. Low Dual Command system pressure in direct drive clutch circuit	1. Refer to first problem
	2. Scorred, burred or binding direct drive clutch piston	2. Replace piston
	3. Control valve spool jammed in underdrive position	3. Check control valve spool
	4. Worn or defective direct drive clutch plates	4. Replace clutch plates
	5. Direct drive clutch pressure plate snap ring out of groove or broken	5. Install snap ring correctly or replace

PROBLEM	POSSIBLE CAUSE	REMEDY
No power to rear wheels when power drive engaged (normal drive operative)	1. Low Dual Command system pressure in underdrive clutch circuit	1. Refer to second problem on page 6-267
	2. Scorred, burred or binding underdrive clutch piston	2. Replace piston
	3. Control valve spool jammed in direct drive position	3. Check control valve spool
	4. Worn or defective underdrive clutch plates	4. Replace clutch plates
No power to rear wheels when Dual Command is engaged in normal drive or power drive	1. Low Dual Command system pressure	1. Check system pressure
	2. Defective planetary gear set ring gear, planetary carrier, sun gear, shaft or mainshaft splines	2. Check components and replace as necessary
	3. Main transmission or rear axle problem	3. Check and overhaul as necessary
	4. Clutch problem	4. Overhaul clutch
Engine stalls or lugs when shifting from power drive to normal drive	1. Scorred, burred or binding underdrive clutch piston	1. Replace piston
	2. Broken or defective underdrive clutch piston return springs	2. Replace springs
	3. Warped or defective underdrive clutch plates	3. Replace clutch plates
Engine stalls or lugs when shifting from normal drive to power drive	1. Scorred, burred or binding direct drive clutch piston	1. Replace piston
	2. Broken or defective direct drive clutch piston return springs	2. Replace springs
	3. Warped or defective direct drive clutch plates	3. Replace clutch plates
Lubrication pressure below specification	1. Weak or broken cooler / lubrication valve spring, or valve stuck open	1. Overhaul cooler / lubrication valve
	2. Blocked or restricted oil cooler	2. Replace oil cooler
Lubrication pressure above specification	1. Incorrect cooler / lubrication valve spring or valve stuck closed	1. Overhaul cooler / lubrication valve

DUAL COMMAND TRANSMISSION - DESCRIPTION AND OPERATION

The Dual Command transmission consists of a planetary gear set installed directly between the clutch and the input shaft of the transmission.

The planetary gear set incorporates two hydraulically operated clutches which lock an element or elements of the planetary gear system together to produce either a normal direct drive to the transmission or a power underdrive which lowers the speed but increases the torque.

Normal Direct Drive

With reference to Figure 103.

Locking any two members of a planetary gear system together results in a direct drive with no change in speed or direction of rotation.

Compressing the direct drive clutch plates locks the sun gear (3) to the planetary carrier (2) which is the output member of the system. Applying power to the ring gear (1) results in a normal direct drive.

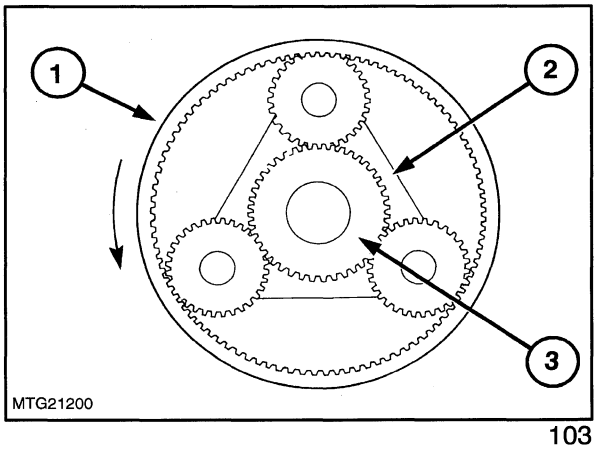

103

Power Underdrive

With reference to Figure 104.

Compressing the underdrive clutch plate, locks the sun gear (4) to the planetary housing. Applying power to the ring gear (1) forces the pinions (2) to rotate on their own axis and 'walk' around the sun gear, taking the planetary carrier (3) with them. The planetary carrier is the output members of the system and turns in the same direction as the ring gear but at a lower speed with a resultant increase in torque. This condition produces a power underdrive.

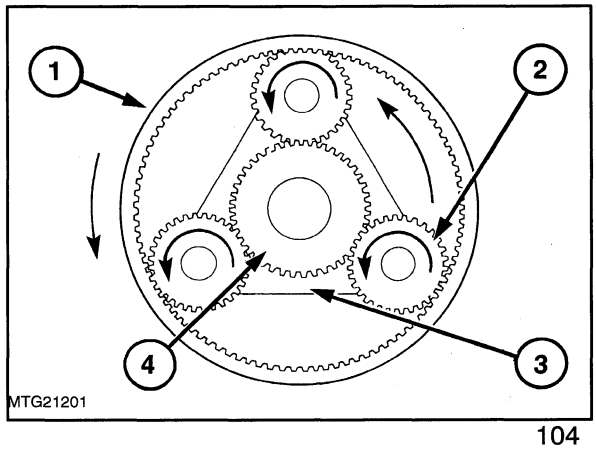

104

The Dual Command transmission is operated by a two-position control valve, located on the side of the planetary gear set housing, which directs oil from the steering section of the tandem hydraulic system pumps, to engage either the direct drive or the underdrive clutch assembly. The oil pressure is regulated by the low pressure regulating and lubrication circuit relief valves housed within the PTO valve assembly.

The ground speeds in normal direct drive are unchanged from the previous 8-speed transmission ground speeds.

The Dual Command transmission ratios and corresponding gear shift lever positions are shown in the Specifications of Chapter 3.

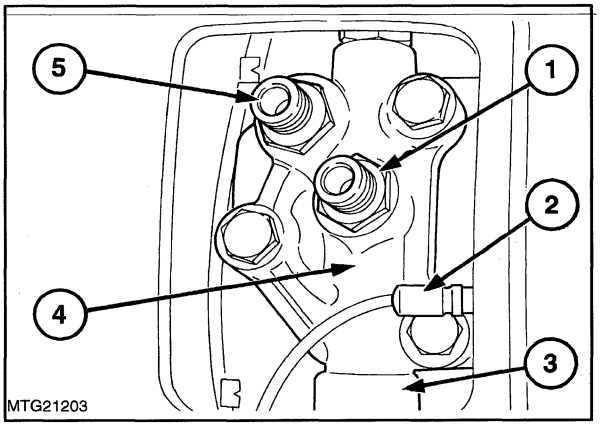

105

Oil Flow to the Direct Drive Clutch

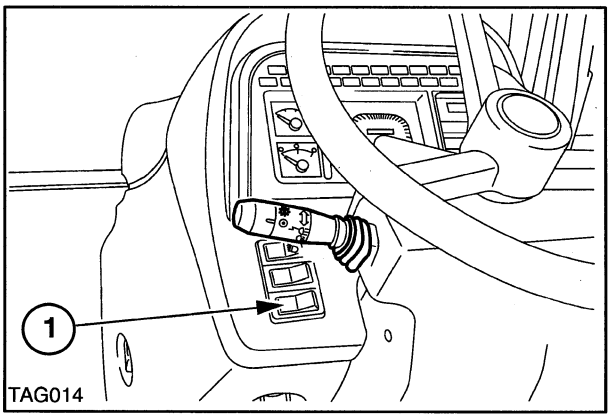

106

With reference to Figure 107.

The control valve, which has no neutral position, is moved by means of a solenoid operated pilot valve. The solenoid is controlled by a switch located on the instrument panel (1).

When the Dual Command control switch is moved to the normal (direct drive) position, electric current flows to the control valve solenoid and so energises the solenoid coil.

The effect of energising the solenoid is to close the pilot valve, thereby preventing the oil supplied at port 'A' from acting on the top of the control valve. Supply oil can, however, still pass through the centre of the control valve and act under the control valve spool.

The hydraulic pressure acting under the control valve lifts the spool upwards, directing supply oil between the lands to the gallery drilled in the planetary housing which connects with the gap between the second and third sealing rings on the direct drive clutch hub. A drilled passage in the clutch hub allows the oil to act behind the direct drive clutch piston. The pressure moves the piston, compresses the piston spring and locks the direct drive clutch plate together so engaging the direct drive clutch.

Hydraulic oil from the rear of the underdrive clutch piston is exhausted and eventually returns to sump via the control valve and the planetary housing. Exhaust oil in the control valve also returns to the planetary housing via a connecting passage in the control valve housing.

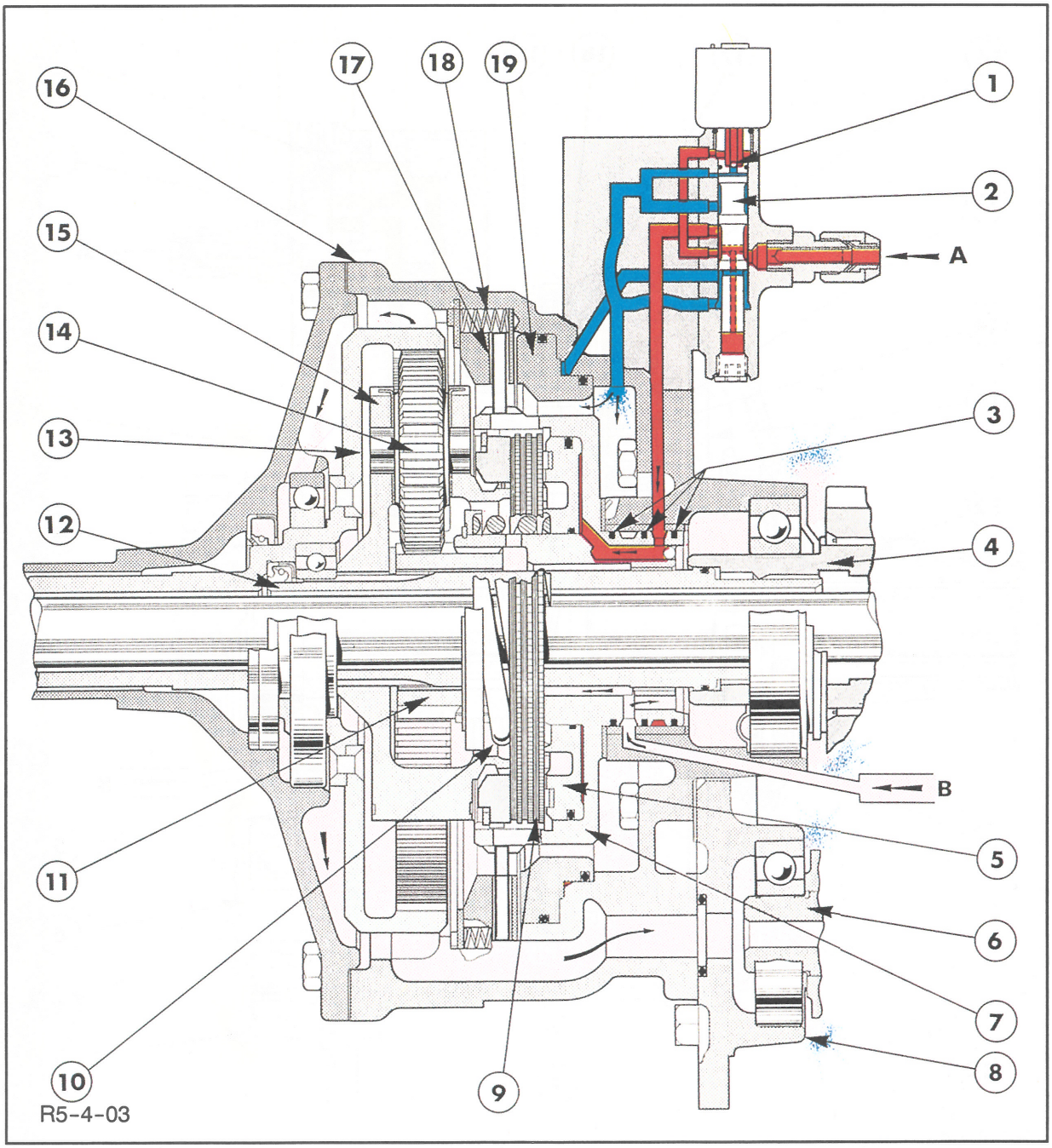

Oil Flow to Direct Drive Clutch 107

Pressure Oil

Lubrication Oil

Reservoir and Exhaust Oil

1. Pilot Valve
2. Control Valve Spool
3. Sealing Rings
4. Transmission Input Shaft
5. Direct Drive Clutch Piston
6. Transmission Countershaft
7. Direct Drive Clutch Housing
8. Hub Support Plate
9. Direct Drive Clutch Plates
10. Direct Drive Clutch Piston Return Spring
11. Sun Gear
12. Centre Shaft
13. Ring Gear and Input Shaft
14. Pinion
15. Planetary Carrier
16. Planetary Housing
17. Underdrive Clutch Plate
18. Underdrive Clutch Piston Return Springs
19. Underdrive Clutch Piston

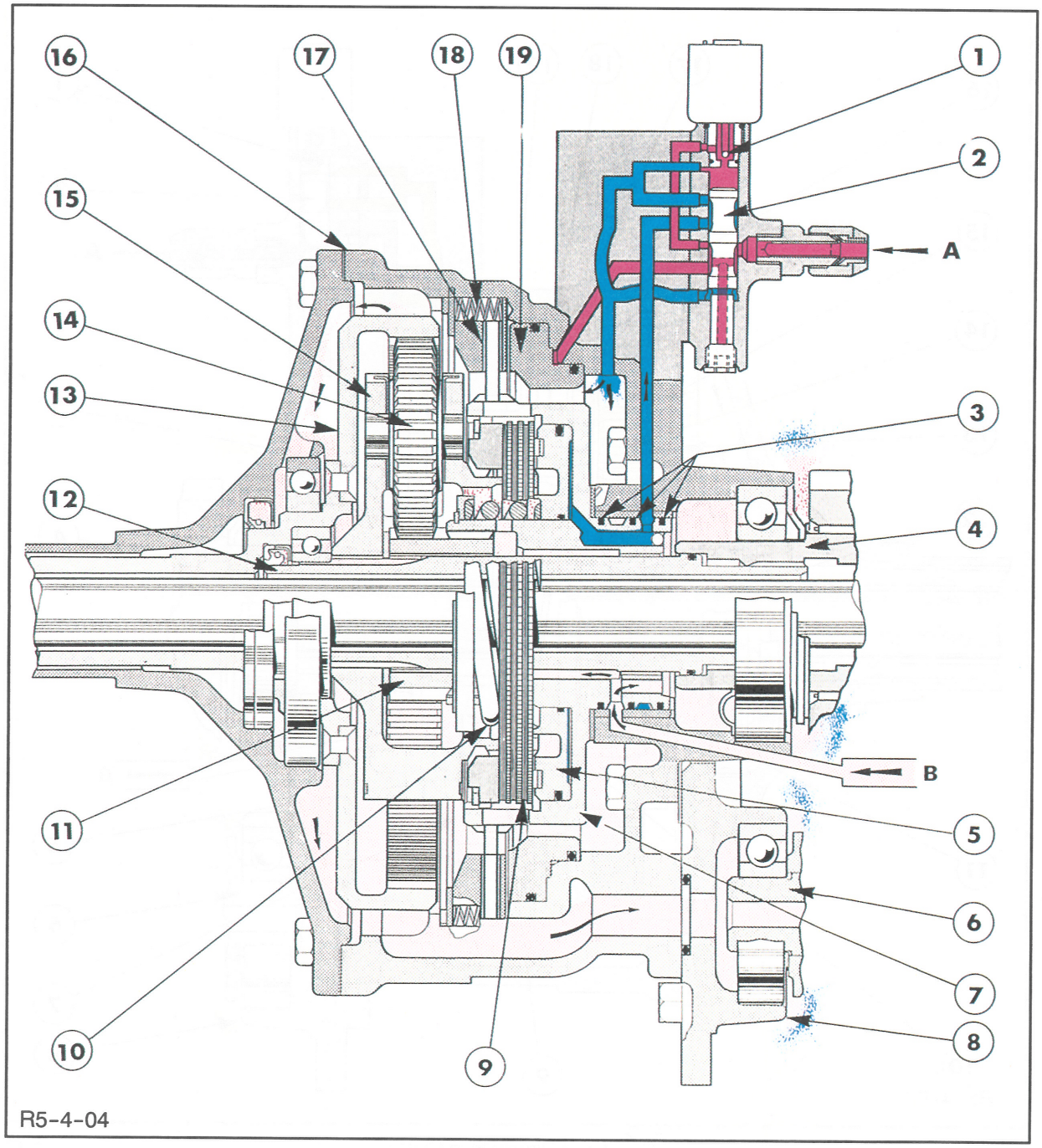

Oil Flow to Underdrive Clutch 108

Pressure Oil

Lubrication Oil

Reservoir and Exhaust Oil

1. Pilot Valve
2. Control Valve Spool
3. Sealing Rings
4. Transmission Input Shaft
5. Direct Drive Clutch Piston
6. Transmission Countershaft
7. Direct Drive Clutch Housing
8. Hub Support Plate
9. Direct Drive Clutch Plates
10. Direct Drive Clutch Piston Return Spring
11. Sun Gear
12. Centre Shaft
13. Ring Gear and Input Shaft
14. Pinion
15. Planetary Carrier
16. Planetary Housing
17. Underdrive Clutch Plate
18. Underdrive Clutch Piston Return Springs
19. Underdrive Clutch Piston

Engaging the direct drive clutch locks the planetary carrier to the sun gear, which is splined to the direct drive clutch housing. When any two members of the planetary assembly are locked together a direct drive results with no change in speed or direction of rotation. Therefore, as the planetary carrier and the sun gear are locked together, power input at the ring gear is passed directly to the planetary carrier which is splined via a connecting shaft to the input shaft of the transmission.

Oil Flow to the Underdrive Clutch

With reference to Figure 108.

When the Dual Command control switch is moved to the power (underdrive) position, the electrical connection to the solenoid is broken and the solenoid becomes de-energised, which opens the pilot valve.

Supply oil from port 'A' can now act on both the upper and lower surfaces of the control valve. However, the area of the top of the control valve is greater than the area of the bottom, which results in the control valve being pushed down by the greater force acting on the top.

Oil from port 'A' is now directed by the control valve spool through a drilled passage in the planetary housing to the underdrive clutch piston. The pressure moves the piston, compresses the piston return springs and locks the underdrive clutch plates together so engaging the underdrive clutch.

Hydraulic oil from the rear of the direct drive clutch piston is exhausted and eventually returns to sump via the control valve and the planetary housing. Exhaust oil in the control valve also returns to the planetary housing via a connecting passage in the control valve housing.

Engaging the underdrive clutch locks the direct drive clutch housing to the planetary housing. As the sun gear is splined to the inner hub of the direct drive clutch assembly, it is also locked to the planetary housing. Applying power to the ring gear and holding the sun gear, causes the pinions of the planetary carrier to rotate on their own axis and 'walk' around the sun gear taking the carrier with them.

The carrier, being the output member of the system, turns in the same direction but at a slower speed than the ring gear, thereby producing an underdrive with a resultant decrease in speed and increase in torque.

Lubrication Oil Flow

Lubrication oil is supplied by the low pressure hydraulic system. This oil is directed via tubing through a transmission oil cooler, before entering a passage in the control valve body shown schematically at 'B' in Figure 107 and Figure 108.

The oil passes through a drilled passage in the planetary housing between the first and second sealing rings on the direct drive clutch hub and through a drilled passage in line with the direct drive clutch plates. The oil flows around the clutch plates and through the planetary assembly. As the members of the planetary assembly rotate, oil is thrown off to lubricate the bearings and other components in the housing. Oil in the bottom of the housing is directed through a tube connecting the housing with the main countershaft bearing in the hub support plate.

Excess oil in the housing flows directly into the transmission case to lubricate the transmission gears and bearings. Oil entering the hub support plate flows into the centre passage of the countershaft and lubricates the bearings and gears through cross drillings in the shaft. As the components on the countershaft and output shaft revolve, oil is carried to the input shaft and range cluster gear to lubricate the upper gears and bearings in the transmission case. Excess oil in the countershaft flows directly into the transmission casing through a slot in the front support plate.

Oil collected in the transmission case is allowed to flow into the rear axle centre housing, with which it forms a common oil reservoir, through passages in the transmission output shaft retainer.

PLANETARY GEAR SET - OVERHAUL

REMOVAL

1. Drain the oil from the transmission and rear axle centre housings.
2. Disconnect the wiring harness from the wire assembly at the plug connector located above the transmission bell-housing. It is not necessary to take the wire assembly out of the transmission plug.
3. Pull the large rubber plug free from the transmission bell-housing and disconnect the lubrication (1) and pressure (2) control lines from the control valve body, Figure 109.

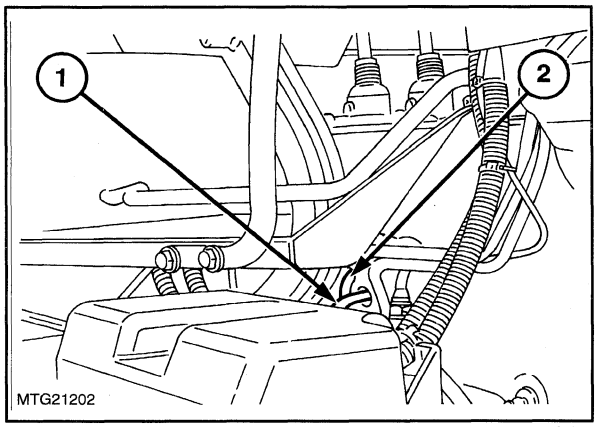

109

4. Unplug the wire assembly (2) from the Dual Command solenoid (3).
5. Withdraw the bolts securing the valve body (4) to the planetary housing and remove the valve body.
6. Remove the gasket from the valve body.

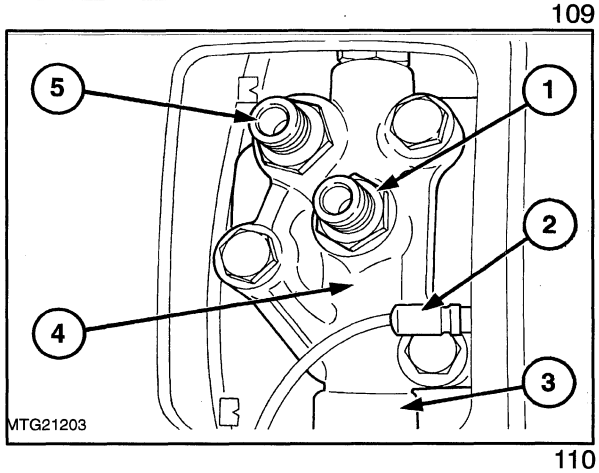

110

7. Remove the pressure line connector (5) and lubrication line connector (1) from the valve body and remove the 'O' ring seals from the connectors.
8. Separate the engine from the transmission as described in "SEPARATING THE TRACTOR.
9. Disconnect the rod between the clutch pedal and the clutch release cross-shaft lever by removing the clevis pin at the lever end.
10. Remove the clutch release fork retaining pin (5), Figure 111, support the fork (4) and withdraw the clutch release cross-shaft (6).
11. Remove the fork (4) and release bearing assembly (3).
12. Remove the bolts (1) from the planetary cover (2).
13. Carefully remove the cover from the planetary housing.
14. Remove the gasket from the cover.

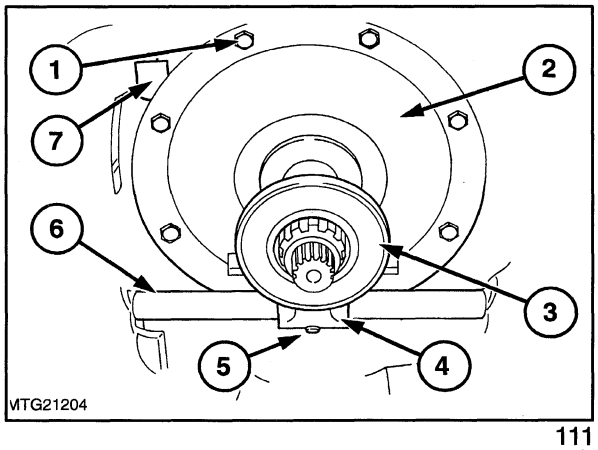

111

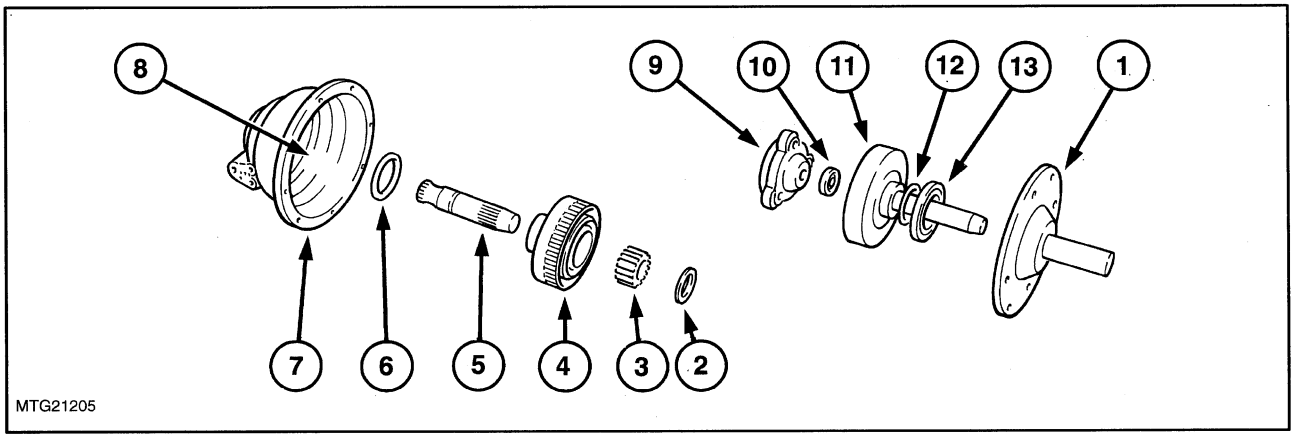

Planetary Gear Set Components - Exploded View 112

1. Cover
2. Thrust Washer
3. Sun Gear
4. Direct Drive Clutch
5. Shaft
6. Thrust Washer
7. Planetary Housing
8. Underdrive Clutch Assembly
9. Planetary Carrier
10. Pilot Bearing
11. Ring Gear and Shaft Assembly
12. Shim
13. Ring Gear Bearing

15. Remove the ring gear and shaft assembly, Fiugre 112, from the housing.

16. Carefully remove the planetary carrier, shaft, sun gear and direct drive clutch assembly as a complete unit.

NOTE: *Removal of the ring gear may also withdraw the Dual Command reduction gear set and direct drive clutch unit (1) from the transmission due to the shaft (2) being a tight fit in the ring gear bearing. In these cases the shaft may be extracted from the ring gear bearing by means of a Slide Hammer, Tool No. FNH09567 (3) and the Planetary Shaft Puller Tool No. FNH04721 (4) placed over the rear of the shaft, Figure 113.*

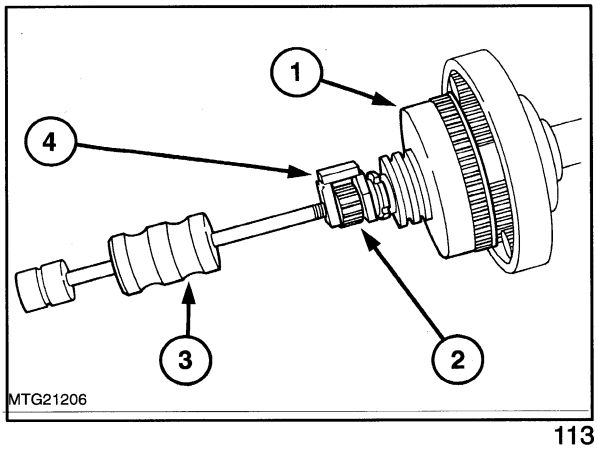

113

17. If necessary, remove the pilot bearing from the shaft using Puller, Tool No. FNH09198, Pulling Attachment, Tool No. FNH09190 and Step Plate, Tool No. FNH09210.

18. Remove the shaft and separate the planetary carrier from the direct drive clutch assembly.

19. Remove the sun gear from the inner splines of the direct drive clutch assembly.

20. Carefully remove the bolts (2) securing the planetary housing (1) to the transmission case, Figure 114.

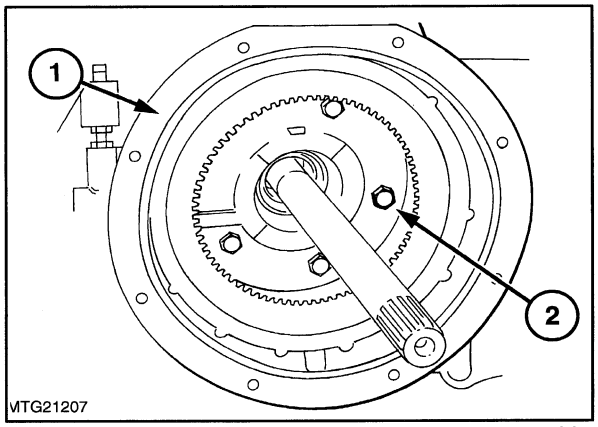

114

21. Remove the planetary housing from the case.

NOTE: *Take care not to lose the anti-spin washer located between the transmission mainshaft front gear and front bearing if the bearing comes away with the Dual Command housing.*

22. Remove and discard the gasket on the rear hub of the planetary housing.

23. Remove the 'O' ring between the planetary housing and the transmision front plate.

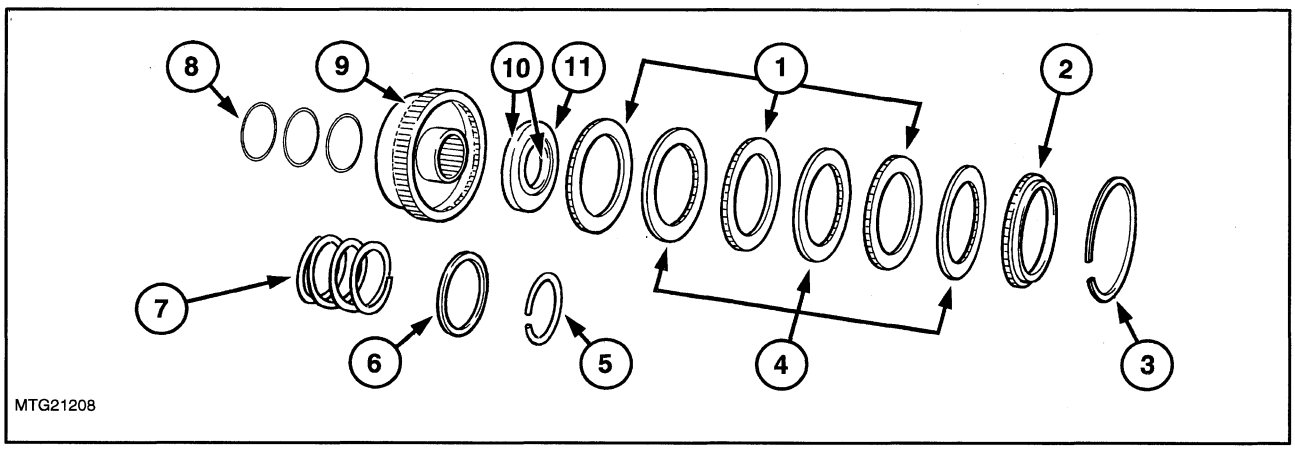

115

Direct Drive Clutch Assembly - Exploded View

1. Steel Plates
2. Pressure Plate
3. Snap Ring
4. Friction Plates
5. Snap Ring
6. Spring Retainer
7. Piston Return Spring
8. Sealing Rings
9. Direct Drive Clutch Housing
10. Piston Seals
11. Piston

DISASSEMBLY

Direct Drive Clutch

1. Remove the sealing rings (8), Figure 115, from the rear hub of the direct drive clutch housing (9).
2. Depress the piston return spring and remove the snap ring (3) from the inner hub using Clutch Compressor, Tool No. FNH01312 (4) and either Puller, Tool No. FNH09516 or a press (1), Figure 116.
3. Release the pressure and ensure the spring retainer (2) does not enter the snap ring groove.
4. Remove the spring retainer and spring.

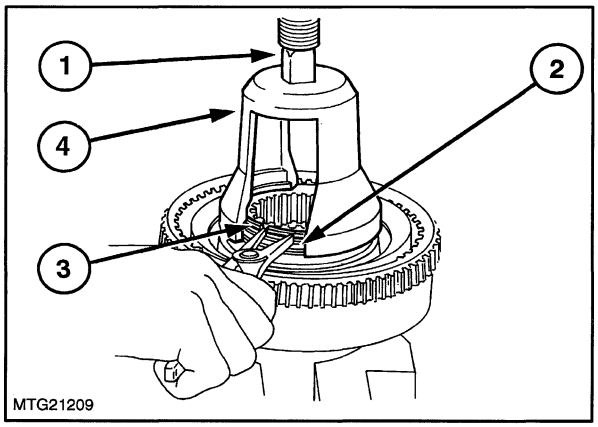

116

5. Remove the clutch pressure plate snap ring (2), as shown in Figure 117.

6. Remove the pressure plate, the friction and steel plates from the clutch housing (1).

IMPORTANT: *Note the order in which the clutch plates were removed.*

7. Place an air hose nozzle in the hole between the middle and rear sealing ring grooves in the clutch housing hub and blow out the piston.

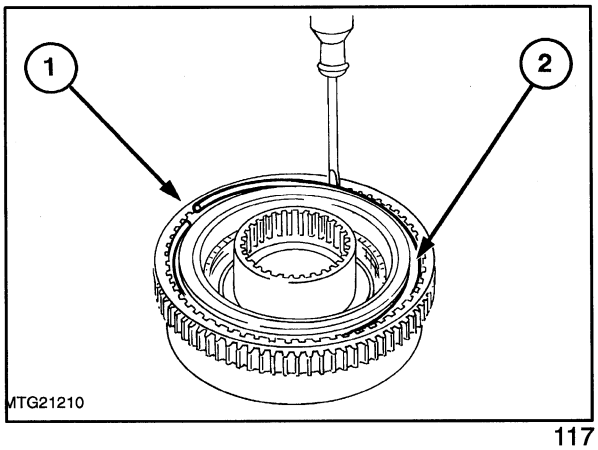

117

IMPORTANT: *For safety, position the direct drive clutch housing with the front face down on the bench so the piston cannot cause injury when expelled.*

8. Remove the piston inner and outer seals.

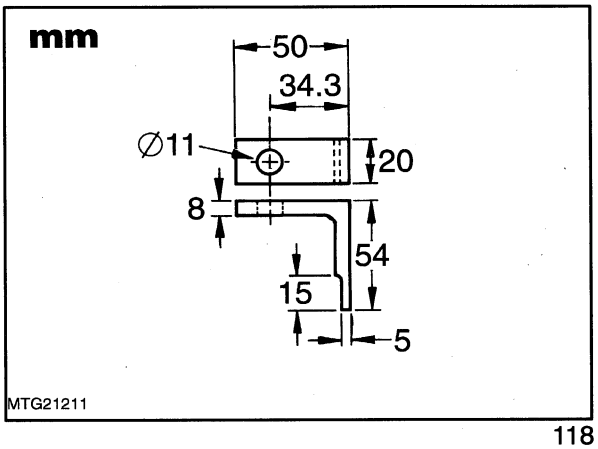

118

Underdrive Clutch

1. Remove the large snap ring (1) from the inner surface of the planetary housing (2).

NOTE: *To remove the snap ring it is recommended that four restraining clamps be made as shown in Figure 118. Equispace the four clamps, Figure 119, around the rim of the planetary housing (2) and secure with the housing bolts.*

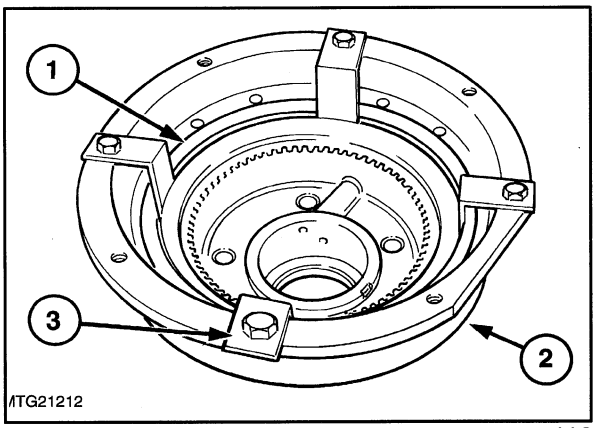

119

2. After removing the snap ring, gradually release the restraining clamps.

3. Remove the spring retainer, pressure plate and friction plate.

IMPORTANT: *Note the order in which the clutch plates were removed.*

4. Remove the piston return springs, locating dowel pins and rear plate.

5. Place an air hose nozzle in the pressure supply port of the control valve housing and carefully blow out the underdrive piston.

IMPORTANT: *Position the planetary housing so that the underdrive piston cannot cause injury when expelled.*

6. Remove the inner and outer seals from the piston.

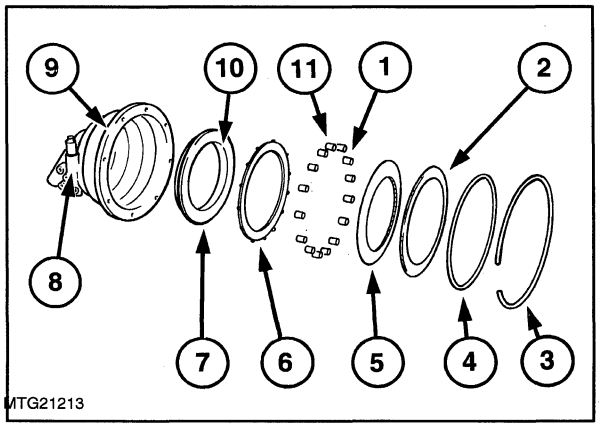

Underdrive Clutch Assembly - Exploded View120

1. Piston Return Springs
2. Pressure Plate
3. Snap Ring
4. Spring Retainer
5. Friction Plate
6. Rear Plate
7. Piston Seals
8. Control Valve Body
9. Planetary Housing
10. Piston
11. Dowel Pins

Control Valve Assembly

With reference to Figure 121.

1. Remove the plug (2) located in the control valve (3) at the opposite end to the solenoid (1).

2. Remove the solenoid and pilot valve assenbly.

3. Remove the control valve spool (4).

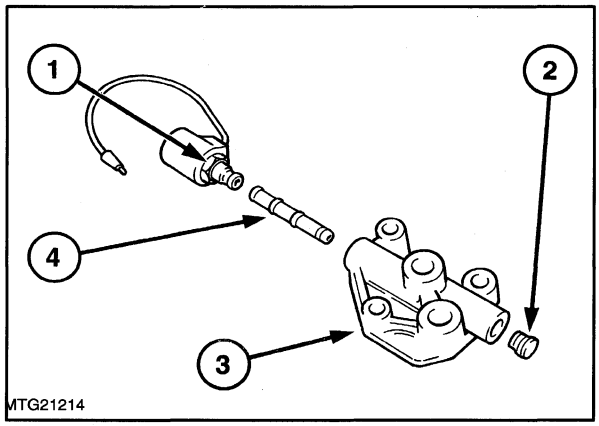

121

INSPECTION AND REPAIR

1. Clean all parts in a suitable solvent and dry thoroughly with a dry, lint-free cloth or compressed air.

2. Examine the lubrication inlet tube, the pressure inlet tube and the lubrication oil tube for damage or distortion. Discard any defective tubes.

3. Examine the control valve solenoid cable for damage or loose connections.

4. Examine the clutch release hub (2) and bearing (4) for excessive wear or damage. If necessary, remove the bearing from the hub with Pulling Attachment, Tool No. FNH09190 (3), Step Plate, Tool No. FNH09210 (5) and either a press or Puller, Tool No. FNH09198 (1), see Figure 122. Press a new bearing onto the hub ensuring the thrust face of the bearing faces away from the shoulder on the hub.
5. Pack the recess in the bearing hub bore with a high melting point grease.

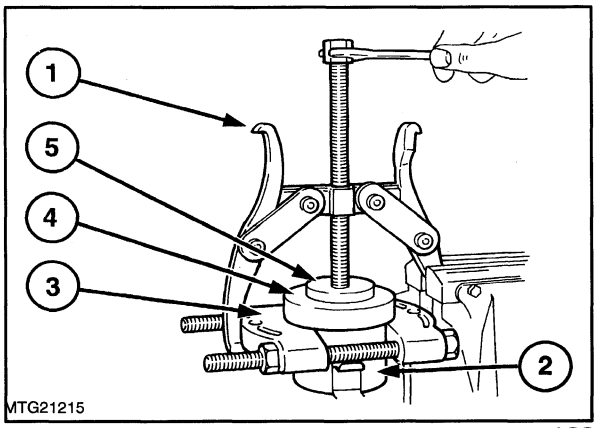

122

6. Inspect the clutch release fork for cracks or excessive wear and replace as necessary.
7. Examine the cross-shaft and lever for distortion or excessive wear and install a new assembly, if damage is evident. Inspect the shaft bushings for excessive wear and replace if found to be defective. Bushings should be driven into the housing until they are flush with the outside edges of the cross-shaft locating bores.
8. Inspect the planetary cover for damage or distortion. Check the face of the cover and the mating surface for nicks or burrs and remove any imperfections with an abrasive stone.
9. Inspect the planetary carrier and gears, planetary shaft, pilot bearing and thrust washer for damage or wear. Install new parts where necessary.
10. Inspect the sun gear for excessive wear or damaged teeth.
11. Inspect the sealing rings from the rear hub of the direct drive clutch assembly for damage, distortion or cracks.

    If new seals are to be installed, insert the seals in a 2.38 in. (60 mm) internal diameter test bore for a period of 10 minutes prior to assembly. This procedure ensures the seals obtain the correct amount of pre-tension to avoid damage on assembly. Install the new seals using a suitable grease to hold the seals in position during re-assembly and ensure the seals do not protrude above the lands of the direct drive housing.
12. Examine the bore in the hub of the planetary housing where the direct drive sealing rings locate. If wear or damage is evident the planetary housing must be replaced.

13. Examine the direct drive clutch housing both externally for cracks or damage and internally for wear and piston scuffing. Inspect the housing external splines for cracked, broken or missing teeth.
14. Inspect the direct drive clutch piston, friction plates, steel plates, pressure plate and snap ring and install new piston seals. Any defective parts must be replaced during re-assembly.
15. Examine the direct drive clutch piston return spring, spring retainer and snap ring for damage.
16. Examine the thrust washer for damage or distortion.

17. Inspect the planetary housing for cracks or damage. Examine the underdrive clutch piston, locating dowel pins, springs, rear plate, friction plate, pressure plate, spring retainer and snap ring and install new piston seals. Discard and replace any cracked, damaged or badly worn parts.
18. Examine the transmission input shaft front bearing (4) in the hub of the planetary housing (3), if removed with the Dual Command housing assembly, for excessive wear or damage. If necessary, use Puller, Tool No. FNH09507 (2) and Slide Hammer, Tool No. FNH09567 (1) to remove the bearing, Figure 123. Press in a new bearing.
19. Inspect the ring gear and shaft assembly for damage or wear. Inspect the shaft splines for damage. If necessary, install a new ring gear and shaft assembly.

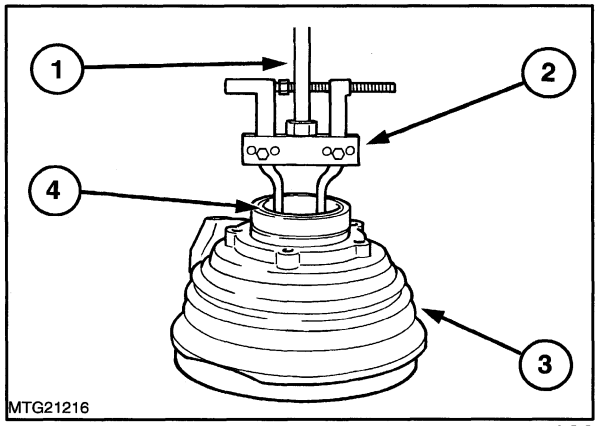

123

20. Examine the ring gear bearing (2) for wear or damage. If necessary, remove the bearing with Puller, Tool No. FNH09506 (6), Puller Legs, Tool No. FNH09521 (5), Pulling Attachment, Tool No. FNH09526 (4) and Step Plate, Tool No. FNH09210 (1), as shown in 124. Take care not to damage the shim located behind the bearing. Ensure the shim is placed against the step on the ring gear shaft (3) and then press the new bearing onto the shaft, using a convenient length sleeve of 3.25 in. (82.6 mm) internal diameter and 3.75 in. (95.3 mm) external diameter.

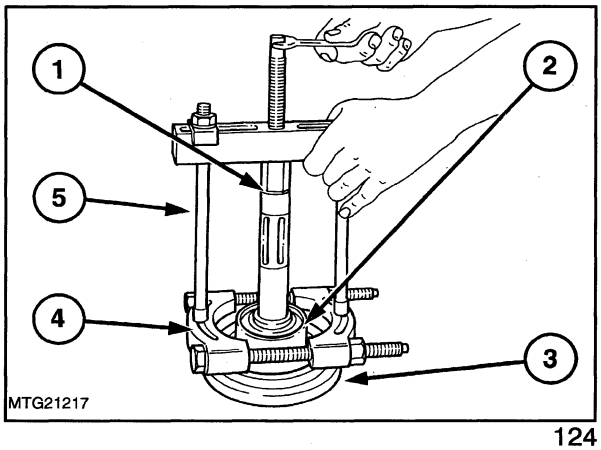

124

IMPORTANT: *The shim located behind the ring gear bearing governs the planetary gear set end play. If any of the major components of the planetary gear set are changed, refer to 'Planetary Gear Set Shimming Procedure' in this Chapter, to determine the correct size shim to be installed.*

21. Examine the valve spool bore in the valve body for damage or wear.
22. Inspect the valve spool lands for scratches, wear or other damage. Minor burrs or scratches may be removed with a fine abrasive material but parts must be washed and dried prior to re-assembly.
23. Check the solenoid for cracks or damage. if any doubt exists as to the serviceability of this component, replace with a new solenoid assembly.

RE-ASSEMBLY

Re-assembly of the direct drive clutch, the underdrive clutch and control valve follows the disassembly procedure in reverse.

NOTE:

(i) When re-assembling the solenoid to the valve, apply a proprietary thread sealant on the pilot valve assembly threads and tighten the nut to 4 lbf.ft (5.4 Nm)

(ii) Ensure the gap of the underdrive clutch retaining snap ring is placed in line with the lubrication port of the Dual Command Housing.

PLANETARY GEAR SET SHIMMING PROCEDURE

IMPORTANT: *This procedure must be followed whenever a new cover, bearing, ring gear, planetary carrier, sun gear, direct drive clutch or planetary housing is installed.*

Free play among the components of the planetary housing is governed by means of a shim located between the bearing and the step on the ring gear shaft.

The free play should be between 0.004-0.020in (0.10-0.51mm). For free play available shims, see Specifications.

Determine the shim required to give the specified free play as follows:-

1. Install the sun gear in the inner splines of the direct drive clutch assembly.
2. Place the thrust washer in the planetary carrier and align the splines.
3. Install the planetary carrier and thrust washer onto the sun gear and ensure the splines of the planetary carrier are engaged with all of the direct drive clutch friction plates.
4. Hold the components tightly together and install the planetary shaft from the rear. Tap the shaft, if necessary, to ensure full engagement.
5. Press the pilot bearing onto the shaft using a sleeve of 1.62 in (41.2 mm) internal diameter and 1.88 in (47.8 mm) external diameter.
6. Position the planetary housing (with underdrive clutch installed) on a bench.

NOTE: *Support the housing on blocks so that the rear of the planetary shaft does not foul the workbench when the direct drive clutch and planetary gear set is fully installed.*

7. Place the thrust washer in the housing with the tab up and towards the rear of the transmission.
8. Install the direct drive clutch and planetary gear set assembly in the housing. Ensure the assembly is fully seated in the housing.
9. Install the ring gear and shaft assembly (without the ring gear bearing or shim) in the housing. Place the Ring Gauge, Tool No. FT.5000 or 1303, on the step of the ring gear shaft.
10. Position the cover on the planetary housing without the gasket.

IMPORTANT: *Ensure all components are properly seated in the housing.*

11. Measure the distance between the face of the cover and the face of the housing at three conveniently spaced intervals. Average the three measurements. If the average measurement is between 0.046-0.060in (1.17-1.52mm) the free play is within the required limits and no shims are necessary.
12. If the average measurement is less than the range stated, determine the shim thickness required by referring to the relevant chart in Specifications Section.

13. Remove the cover and the ring gear and shaft assembly from the planetary housing. Remove the ring gauge and place the appropriate shim(s) on the step of the ring gear shaft. Press the bearing onto the ring gear using a convenient length sleeve of 3.25 in. (82.6 mm) internal diameter and 3.75 in. (95.3 mm) external diameter).
14. Remove the components from the planetary housing and retain in order for final installation.

INSTALLATION

NOTE: *If it is necessary to install a new cover, bearing, ring gear, planetary carrier, sun gear, direct drive clutch or planetary housing, refer to 'Planetary Gear Set Shimming Procedure' in this Chapter, before installing the planetary components in the transmission case.*

Installation of the planetary gear set and control valve follows the removal procedure in reverse. Pay particular attention to the following important points:

(i) If all components are correctly installed, the cover should easily seat in the housing. Any need for force indicates incorrect re-assembly.

(ii) Install new 'O' ring seals on the lubrication oil transfer tube.

(iii) Coat all tube joints with a proprietary sealing compound.

(iv) Install new 'O' ring seals on the control valve pressure line and lubrication line connections.

(v) Take care to avoid damage to the control valve solenoid and wire and ensure the grommet is firmly in place to protect the solenoid wire.

PRESSURE TESTING

For the following tests ensure the tractor hydraulic oil is at operating temperature, the transmission and hydraulic system are in neutral and the power take-off is disengaged.

Dual Command SYSTEM PRESSURE TEST (Low Pressure Hydraulic Circuit Test)

1. Remove the pressure switch (1) for the low pressure hydraulic circuit, Figure 125.

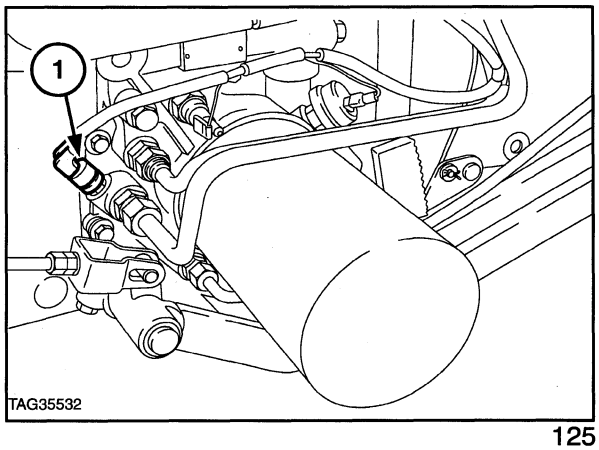

125

2. Install a 0-400 lbf.in^2 (0-30 bar) pressure gauge, FT.8616 (1), Figure 126 with adaptor FNH 00705 (2) and test hoses, part Nos 83936707 and 83926717 (3).

3. Set the engine speed to 2100 rev/min. and observe the pressure reading. A reading of 15.2 -17.9 bar (220-260 lbf.in^2) should be recorded.

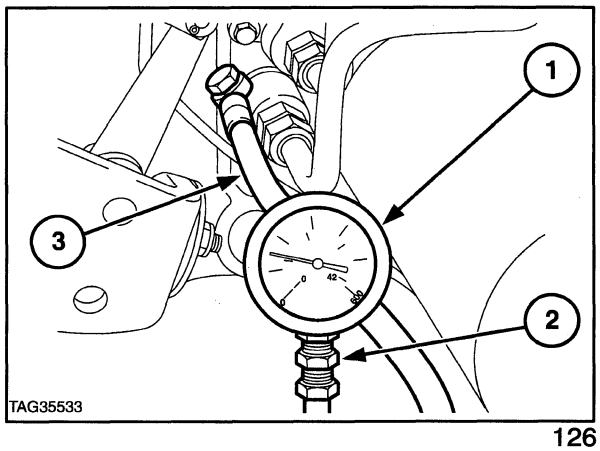

126

TRANSMISSION LUBRICATION PRESSURE TEST

1. Operate the tractor and set the engine speed to 1000 rev/min. Stop the engine but do not re-adjust the throttle.

2. Using a test hose (4), part number, E1NN-F493-AA with adaptor FNH00705 and a suitable 7/16 in. JIC adaptor (3), which must be a tight fit inside the oil cooler inlet hose (1), connect the 400 lbf.in^2 pressure gauge, FNH06653 (5), to the cooler inlet hose, Figure 127, using a suitable hose clamp (2) to secure.

3. Using an assistant to start the engine, observe the reading on the pressure gauge. Do Not run the tractor longer than is necessary to observe the pressure gauge reading.

The pressure recorded should be 73-123 lbf.in^2 (5.3-8.5 bar), depending on engine speed. 73-123 lbf.in^2 (5.0-8.5 bar) is the minimum operating pressure of the lubrication circuit relief valve located in the PTO valve and clutch assembly.

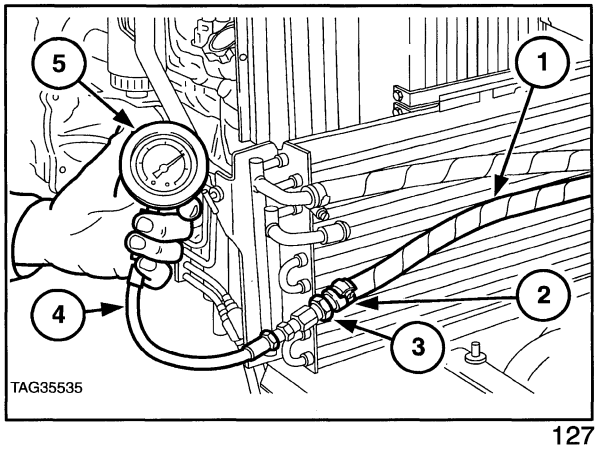

127

REDUCTION GEARBOX ASSEMBLY

SPECIFICATIONS, TIGHTENING TORQUES AND SPECIAL TOOLS

SPECIFICATIONS

Reduction Ratio	5.7:1
Output Shaft End Float with Reduction Gearbox	0.0015-0.0034 in (0.038-0.086 mm)
Output Shaft Pre-Load with Reduction Gearbox	Pull required to turn the output shaft with string wound around output shaft splines 9.5-16 lbf. (1.0-1.8 N)
Output Shaft Pre-Load Shims Available for Reduction Gearbox	0.004 in. (0.10 mm) 0.006 in. (0.15 mm) 0.020 in. (0.50 mm)

TIGHTENING TORQUES

Components	lbf.ft	Nm
Rear Support Plate Retaining Bolts	35	47
Output shaft Retainer Socket Head Screws	23	31

SPECIAL TOOLS

Description	V.L. Churchill Ltd Tools	Nuday Tools	FNH
Step Plates	630S	9210 (630S)	FNH09210
Internal / External Puller	943	9507 (943)	FNH09507
Slide Hammer	943S	9567 (943S)	FNH09567

REDUCTION GEARBOX - DESCRIPTION AND OPERATION

The reduction gearbox, which is available as an option on the 8x2, with or less dual power, non-synchromesh transmission, provides an extra reduction ratio below the standard low range. The reduction being obtained through the use of an epicyclic gear set which is mounted on the transmission output shaft.

When installed the reduction gearbox provides an additional creep range of four forward and one reverse speed, which increases the total number of ratios available to twelve forward and three reverse. On transmissions fitted with dual power, an additional eight forward and two reverse speeds are provided increasing the total ratios available to 24 forward and six reverse.

The epicyclic gear set provides a reduction ratio below the low range of 5.7:1.

All reduction gearboxes consist basically of an epicyclic gear set mounted in place of the transmission output shaft gear used on the standard transmission.

A cross section of the reduction gearbox is shown in Figure 128.

The epicyclic gear set consists of:

(i) An outer ring gear which is fixed in relation to the transmission housing.

(ii) Planetary gears mounted in the carrier, the rear gear teeth engaging the outer ring gear.

(iii) The carrier, which has teeth formed on the outside diameter to act as the output shaft gear.

(iv) Intermediate ring gear which engages the front teeth of the planetary gears.

(v) The coupling, which is splined to and drives the output shaft, which may engage the carrier or intermediate ring gear.

The coupling is moved by means of the selector fork and gear shift rail.

In the neutral position, as shown in Figure 128 , the coupling does not engage any component of the reduction gear set and so the coupling and output shaft cannot be driven.

The transmission low range is selected by sliding the gear shift rail rearwards to the detent position adjacent to neutral. The movement of the rail, through the selector fork, causes the coupling to engage the reduction gear set carrier. Power is now transmitted from the secondary countershaft, via the carrier and coupling to the output shaft. The carrier has the same number of gear teeth on the outside diameter as the output shaft gear utilised on standard transmission, therefore, the ground speeds obtained in the low range are identical to those of a standard transmission.

The creep range is selected by sliding the gear shift rail and fork further rearward to the final detent position. The coupling is moved by the selector fork inside the carrier assembly to engage the intermediate ring gear. Power is now transmitted from the secondary countershaft to the coupling via the planetary gear set.

The planetary gear set is designed so that the carrier is driven and causes the planetary gears to rotate with the rear teeth engaged in the stationary ring gear. The forward teeth of the planetary gears engage and drive the intermediate ring gear at reduced speed. The coupling, which now engages the intermediate ring gear, therefore, drives the output shaft at a reduced speed to obtain the required creep range.

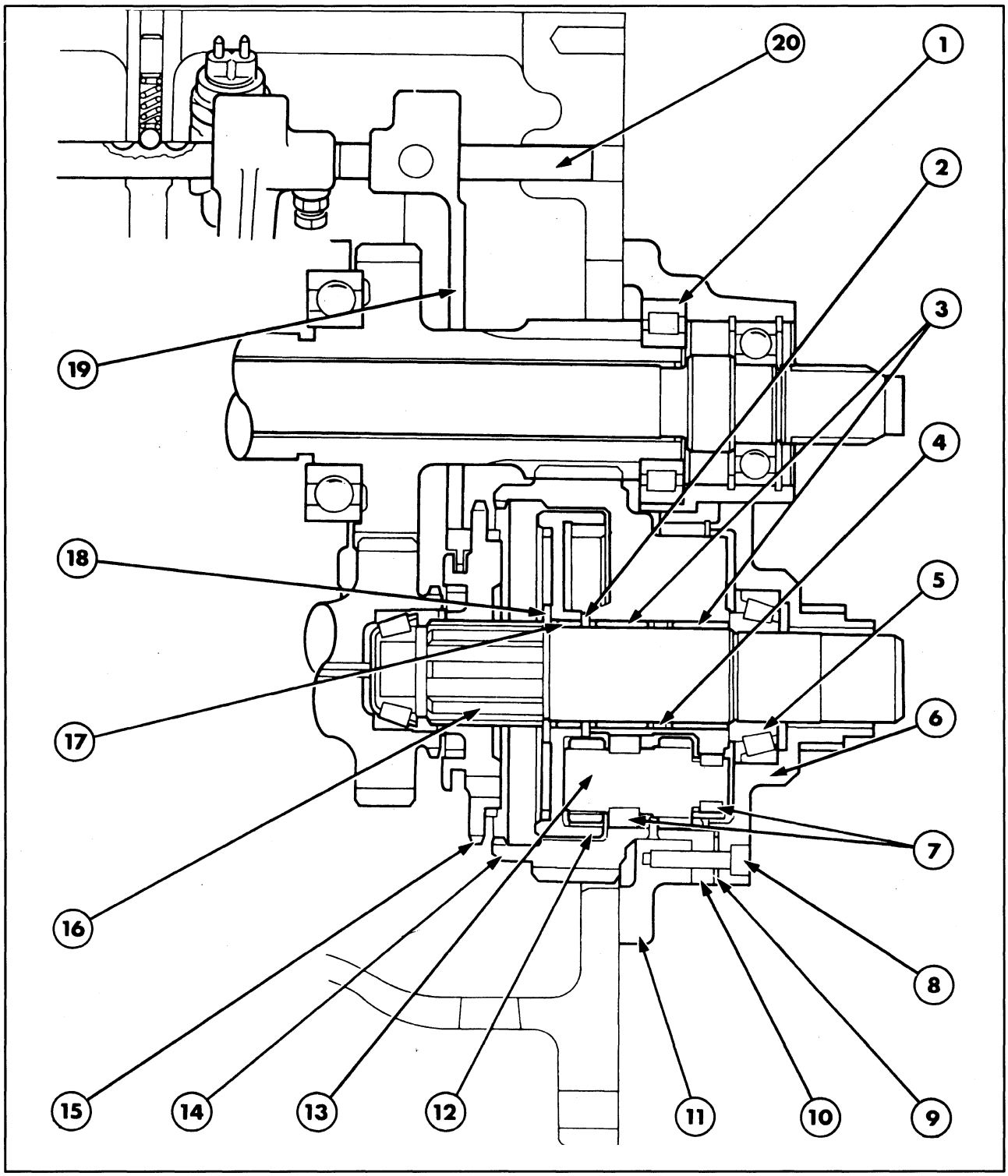

Reduction Gearbox 128

1. Roller Bearing
2. Thrust Washer
3. Needle Roller Bearing
4. Spacer
5. Taper Roller Bearing
6. Output Shaft Retainer
7. Roller
8. Socket Head Screw
9. Shim(s)
10. Outer Ring Gear
11. Support Plate
12. Intermediate Ring Gear
13. Planetary Gear
14. Carrier
15. Coupling
16. Output Shaft
17. Needle Roller Bearing
18. Thrust Washer
19. Selector Fork
20. Gear Shift Rail

REDUCTION GEARBOX OVERHAUL

REMOVAL

1. Drain the oil from the transmission.
2. Separate the rear axle from the transmission, see "SEPARATING THE TRACTOR" .
3. Remove the gear shift cover as described in Chapter 3.
4. Remove the snap ring, thrust washer and hydraulic pump idler gear, located on the output shaft retainer.
5. Remove the rear support plate retaining bolts (2) and lever the support plate (1) away from the transmission, Figure 129.

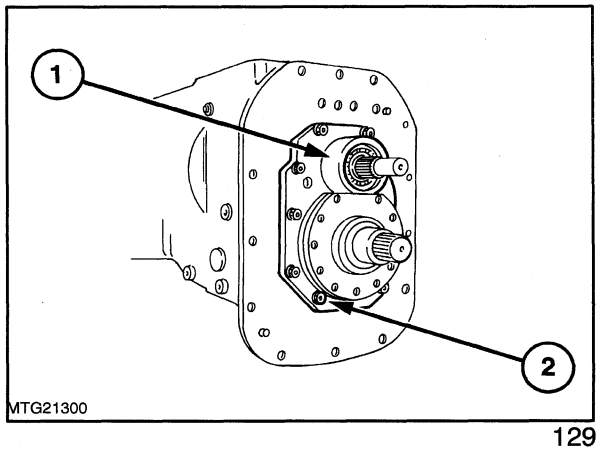

129

6. Remove the rear support plate (2) and the P.T.O. shaft (1) as an assembly, Figure 130.

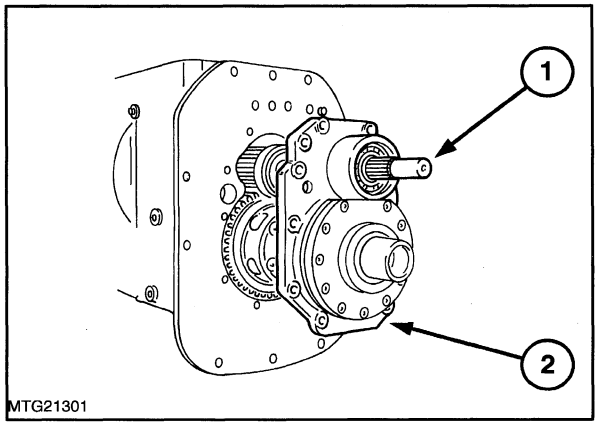

130

7. Partially withdraw the secondary countershaft assembly (1) until the front bearing is out of the location. Lift the secondary countershaft to allow the output shaft and reduction gear set assembly (2) to be removed from the rear compartment, Figure 131. Remove the secondary countershaft.
8. Remove the high/low/creep coupling from the rear of the transmission, or the output shaft, as required.

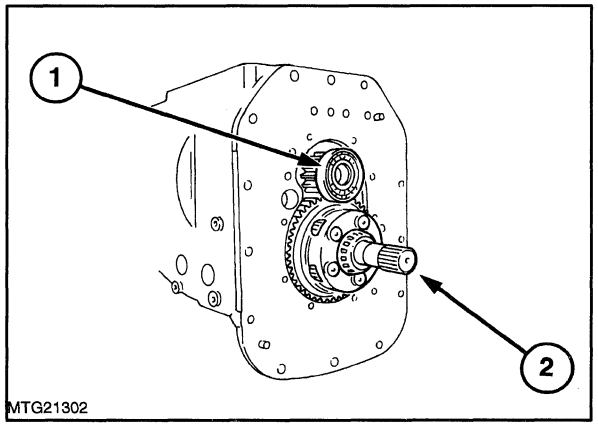

131

DISASSEMBLY

1. Remove the output shaft retainer (1) from the rear support plate (2), Figure 132.

2. Remove the outer ring gear (3) from the rear support plate.

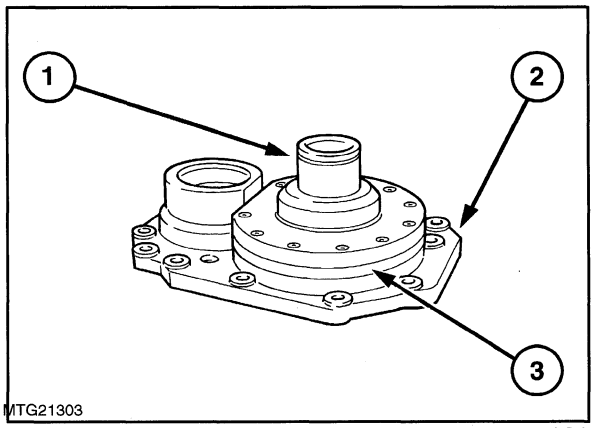

132

3. Remove the output shaft from the reduction gear set assembly (2). If necessary, use a soft faced hammer to drive the output shaft forwards out of the assembly, Figure 133. Ensure the intermediate ring gear (3) remains inside the reduction gear set (1).

NOTE: *Removal of the output shaft will push the bearing off the rear of the output shaft.*

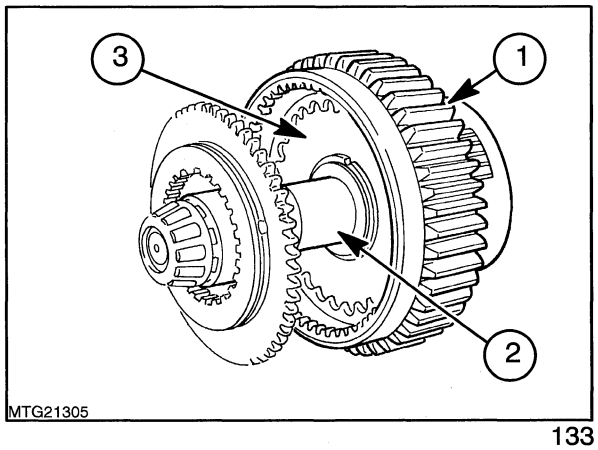

133

4. Remove the thrust washer (3) and needle roller bearing from the output shaft (or intermediate ring gear (4) should these components remain inside the gear set assembly).

5. Lay the epicyclic gear set on the bench with the intermediate ring gear uppermost. Withdraw the intermediate ring gear (4), Figure 134.

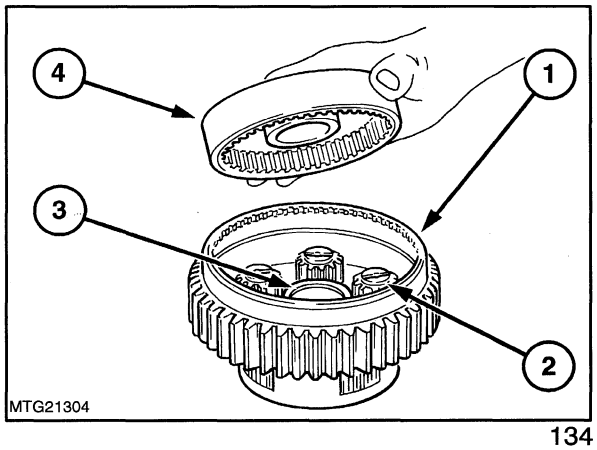

134

6. Remove the thrust washer, needle roller bearing, spacer and second needle roller bearing from the carrier.

7. Remove the planetary gears (2) from the carrier (1). Take care to retain the bearing rollers.

INSPECTION AND REPAIR

1. Inspect the output shaft retainer and rear bearing cup for wear or damage. If necessary, use Pulling Attachment, Tool No. FNH09507 and Slide Hammer, Tool No. FNH09567 to remove the cup from the retainer. Use a suitable Step Plate, Tool No. FNH09210 to install a new bearing cup.

2. Examine the rear support plate for wear or damage and replace if necessary.

3. Inspect the output shaft and pilot bearing. Replace worn or damaged components.

4. Check the secondary countershaft and P.T.O. drive shaft bearings located in the rear support plate. Replace any unserviceable bearing with a suitable Step Plate, Tool No. FNH09210.

5. Examine all needle roller bearings and thrust washers. Replace any unserviceable items.

6. Inspect the planetary gear set carrier, ring gears and planetary gears and replace any worn or damaged components on re-assembly. However, if several components are worn, the complete reduction gear set should be replaced.

7. Examine the coupling and gear shift mechanism. Replace any unserviceable components.

RE-ASSEMBLY

1. Use high quality grease to position the thirteen 5 mm diameter rollers (3) and eleven 9 mm diameter rollers (1) around the planetary gears (2), Figure 135.

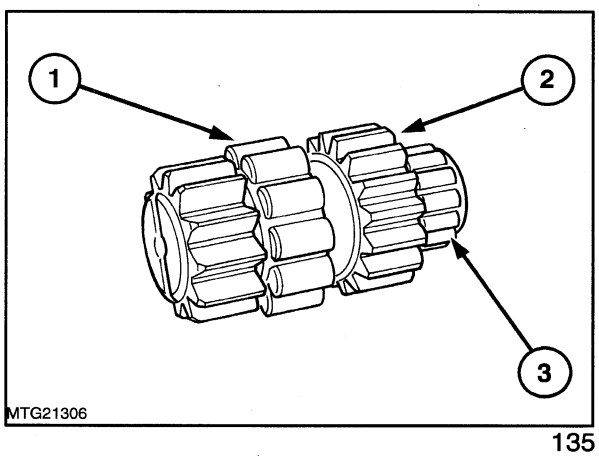

135

2. Install the planetary gears (3) with their rollers (4) in the carrier (1) which must rest inside the outer ring gear (2) which acts as an assembly gauge, Figure 136.

IMPORTANT: *During installation, turn each gear until the master tooth (marked with a punched dot) points towards the centre of the carrier.*

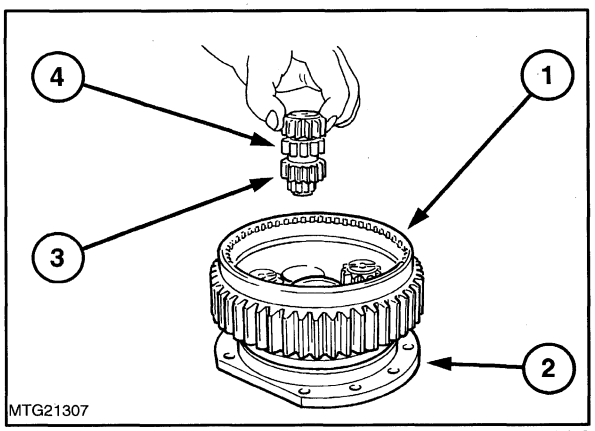

136

Planetary Gear to Carrier Relationship

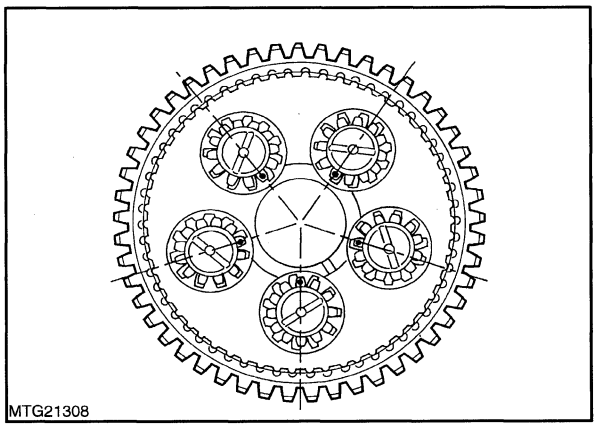

137

3. With reference to Figure 138 and viewed from the front, four pairs of gear teeth are in alignment. Identify the right-hand tooth of any aligned pair on the 12 teeth gear as the master tooth.

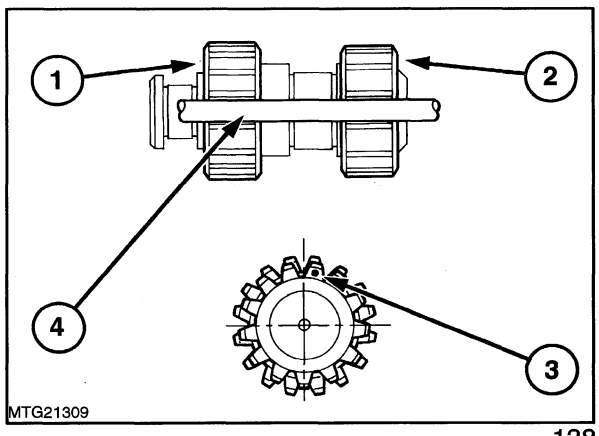

138

Identification of Master Tooth on 5.7:1 Reduction Ratio Planetary Gear

1. 16 Teeth Gear
2. 12 Teeth Gear
3. Master Tooth on 12 Teeth Gear
4. Rod Used to Establish Alignment of Gear Teeth

4. Locate the smaller diameter thrust washer (2), chamfered side up, on the carrier hub before installing the intermediate ring gear (1) into the carrier to fully engage with the planetary gears.

5. Place the gear coupling, groove to the front, on the output shaft.

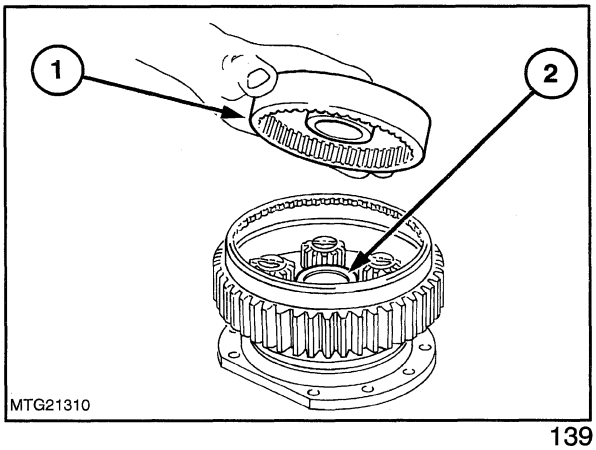

139

6. Position the larger diameter washer (1) on the output shaft (2) with the chamfered side facing the coupling (3) Figure 140.

   (i) Lubricate the needle roller bearings with high quality grease and install the narrow needle roller bearing in the intermediate ring gear. Install the two wide needle roller bearings, with the spacer between them, in the carrier.

   (ii) Hold the previously assembled output shaft vertically and locate the carrier assembly on the output shaft.

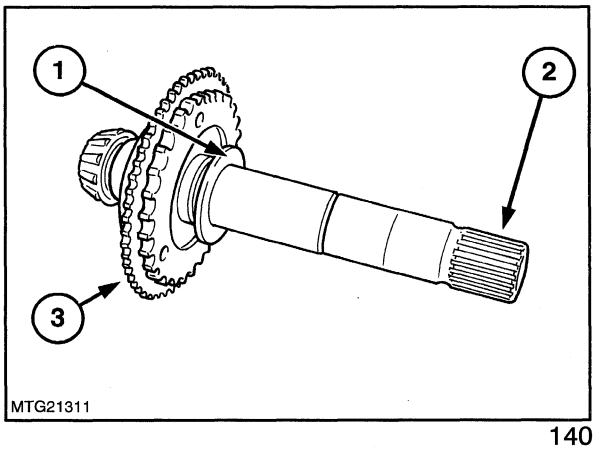

140

NOTE: *When the carrier is fully located, the output shaft should protrude above the carrier rear thrust face.*

   (iii) Push the output shaft rear bearing against the output shaft shoulder (1).

   (iv) Use feeler gauges (2) to check the clearances between the bearing (3) and the carrier. The gap should be 0.012-0.032 in. (0.3-0.8 mm), Figure 141.

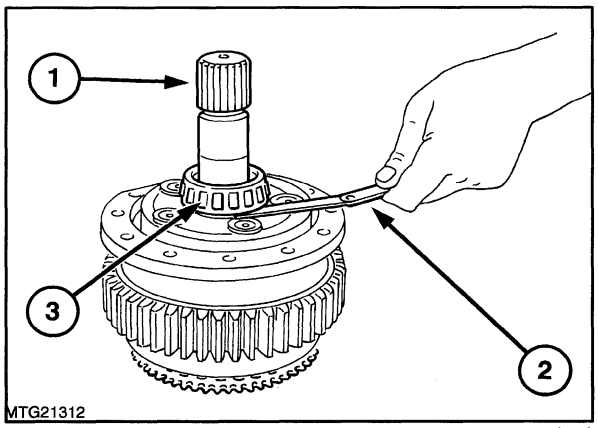

141

INSTALLATION

1. Install the assembled carrier and output shaft unit in the transmission. Ensure the coupling engages the selector fork.

2. Remove the outer ring gear from the reduction gear set assembly.

3. Install the rear cover plate on the transmission.

4. Install the support plate retaining bolts and tighten to a torque value of 35 lbf.ft (47 Nm).

5. Locate the outer ring gear into the rear cover.

6. Replace the shims and bolt the output shaft retainer to the support plate so that the ring gear is also supported. Tighten the socket head screws to a torque value of 23 lbf.ft (31 Nm).

7. Using a pull scale and string wound around the output shaft, check the output shaft torque pre-load. With the transmission in neutral the pull scale should read between 9.5-16 lbf.in. Add or subtract shims from between the output shaft retainer to obtain the correct pre-load

   Alternatively, if a pull scale is not available, add or subtract shims to obtain an output shaft *end float* of between 0.0015-0.0034 in. (0.038-0.086 mm).

8. Install the hydraulic pump idler gear and thrust washer and retain with the snap ring.

9. Replace the gear shift cover as described in Chapter 3.

10. Reconnect the transmission and rear axle assemblies, see "SEPARATING THE TRACTOR"

11. Fill the transmission with the correct grade and quantity of oil, see Specifications.

DUAL COMMAND TRANSMISSION (24 × 24 DUAL COMMAND)

SPECIFICATIONS, SPECIAL TOOLS AND TIGHTENING TORQUES

Control System	Electro-hydraulic with electronic management system
Clutch Hydraulic Operating Pressure	15-18 bar (220-260 lbf.in^2) at 2100 engine rev/min, supplied from the low pressure side of pump
Pressure Lubrication	Maximum 7.6 bar (110 lbf.in^2) supplied by the steering gear pump
Lubricant Capacity Transmission/Rear Axle	U.S. Gallons 15.4 Imp. Gallons 12.8 Litres 58.5
Lubricant	134 D
Lubricant operating temperature	65°C (150°F)
Hydraulic Control Valve	
Type	Separate Casting, with internal cast-in galleries
Control	By electrically operated solenoid coils signaled by electronic management system
Multi-Plate Wet Clutches	
Type	Constant running, pressure lubricated, pressure applied, spring released.
Number of Friction Plates	5 in each clutch
Number of Steel Plates	5 in each clutch
Number of Separator Springs	5 in each clutch

SPECIAL TOOLS

Description	Tool Number (V.L. Churchill Ltd.)	Tool Number (FNH-A No.)
Piston Installer (Pusher)	4FT504	-
Tapered Sleeve C1/C2 Piston Seal Installer	4FT505	FNH-00869
Clutch Piston Return Spring Compressor	4FT508	FNH-00872
Diagnostic Switch	4FT950	FNH-00874
M10 Studding (I metre)	Purchase Locally	
Silver Steel Rod 0.236 in (6mm)Dia x 6 in (152mm) long 3 off	Purchase Locally	

TIGHTENING TORQUES

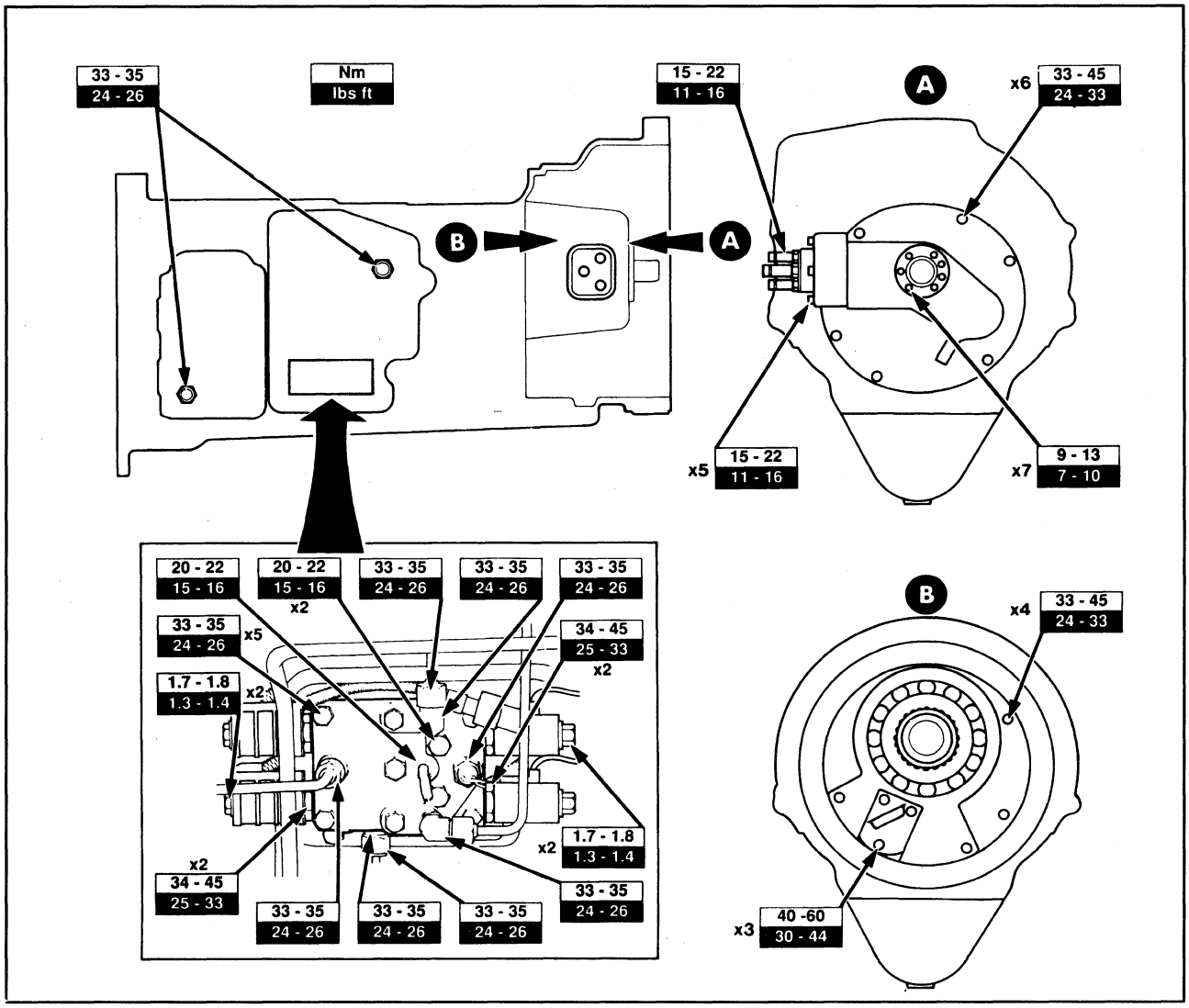

142

Description and Operation

General

The 24x24 transmission Dual Command assembly consists of a dual, multi plate wet clutch assembly, known as C1 and C2, located directly between the flywheel damper and input shaft of the transmission. The conventional clutch of the standard 12x12 Synchro Command transmission is not required.

The Dual Command unit provides an under drive to all of the standard, direct drive ratios, reducing road speed by 18% and increasing torque by 22%, providing the transmission with 24 forward and 24 reverse gears.

Selection of either under drive or direct drive modes is by switches located on the main shift lever knob, Figure 143. The actual selection is controlled by an electro-hydraulic system, the operation of which is described in greater detail later in this section.

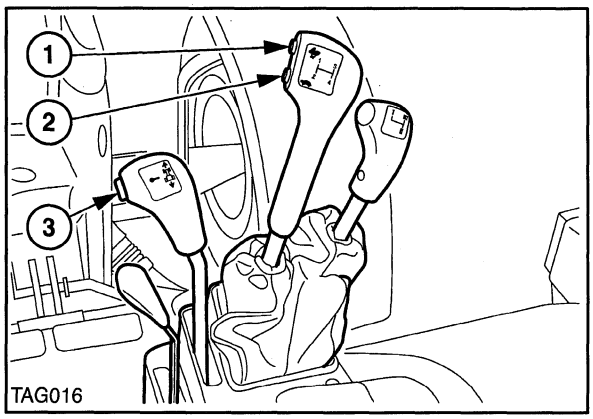

Dual Command Switch Location 143

1. Direct Drive Switch
2. Under Drive Switch
3. Main Shift Lever and Transmission Dump Switch

Under Drive (UD) Operation-Mechanical

With reference to Figure 144 and Figure 145.

At tractor start up the transmission will automatically default to under drive operation. Oil pressure from the control valve assembly is directed to the C1 (front) clutch assembly. The drive is then taken down through the underdrive gear assembly and onto the transmission input shaft, the underdrive gear ratios providing the 18% drop in input speed to the transmission.

Direct Drive (DD) Operation - Mechanical

With reference to Figure 146 and Figure 147.

When the momentary switch on the main shift lever knob is energised the oil pressure from the control valve assembly is directed to the C2 (rear) clutch assembly and drive is straight through the C2 clutch assembly to the transmission input shaft.

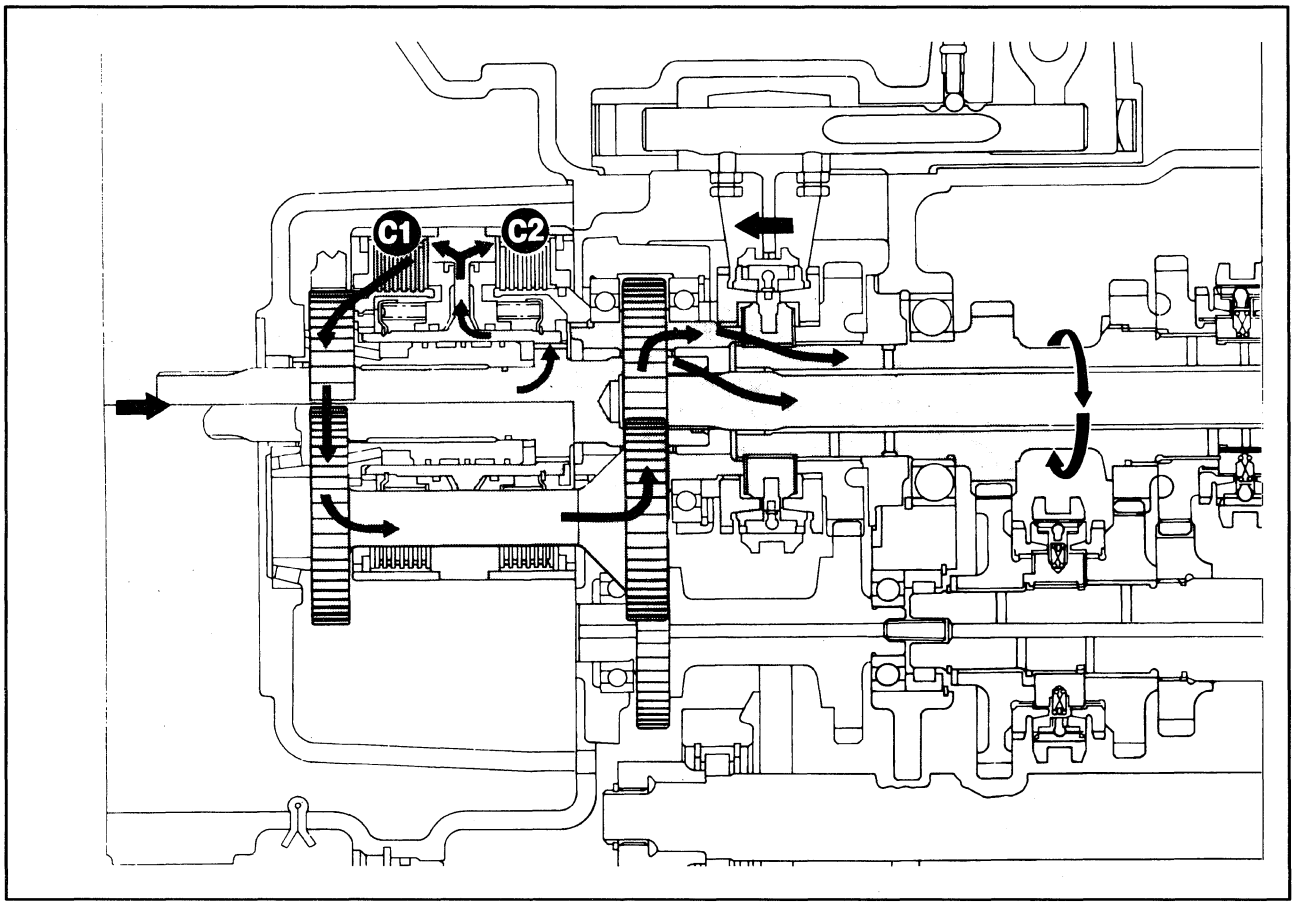

Under Drive Power Flow - Forward 144

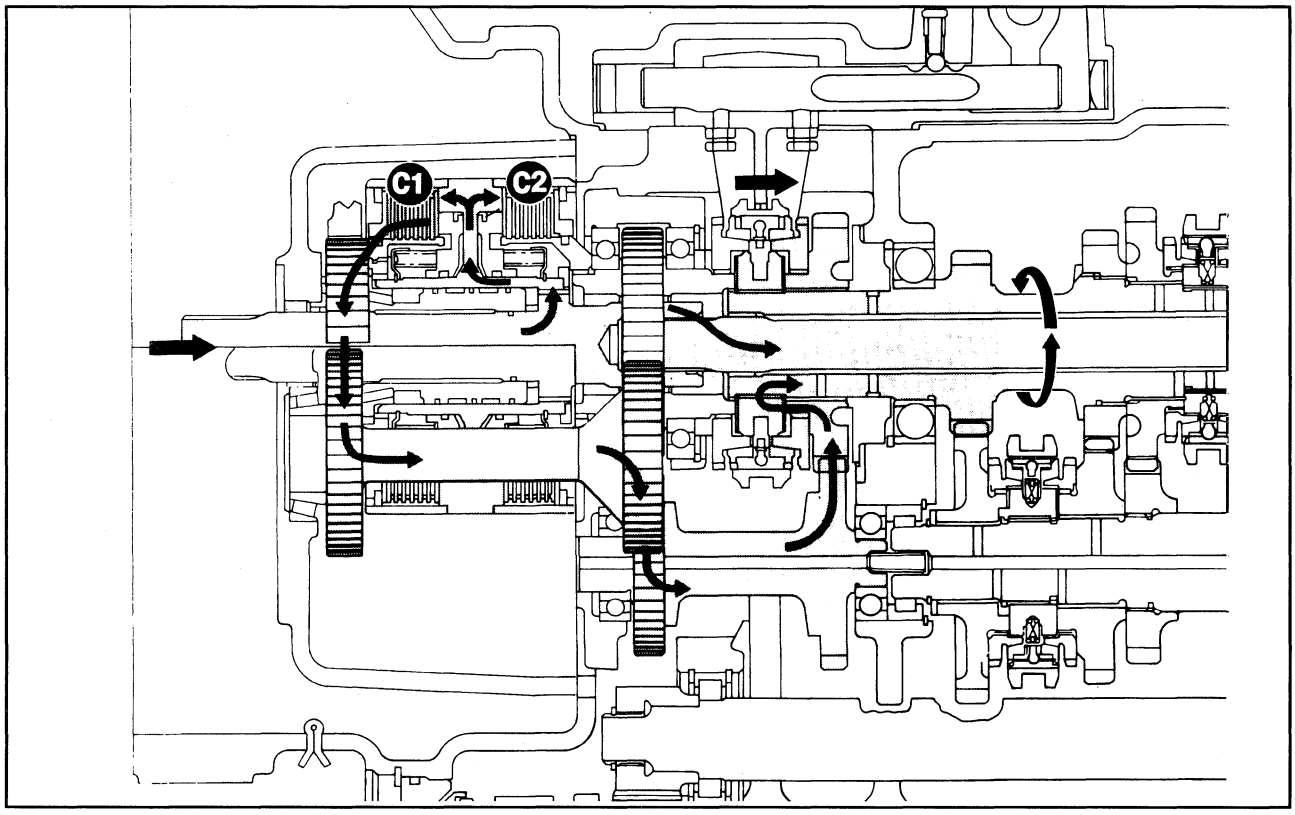

Under Drive Power Flow - Reverse 145

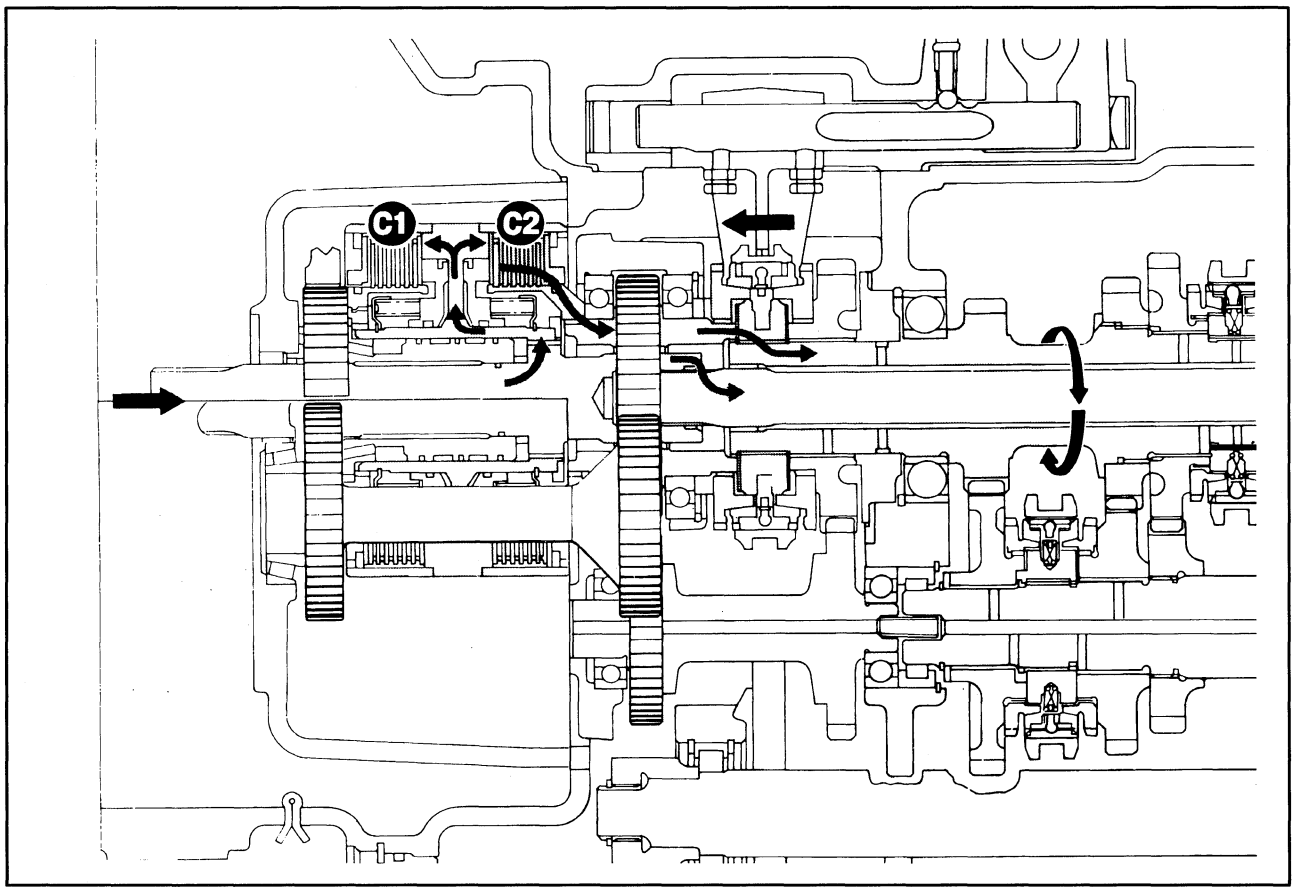

Direct Drive Power Flow - Forward 146

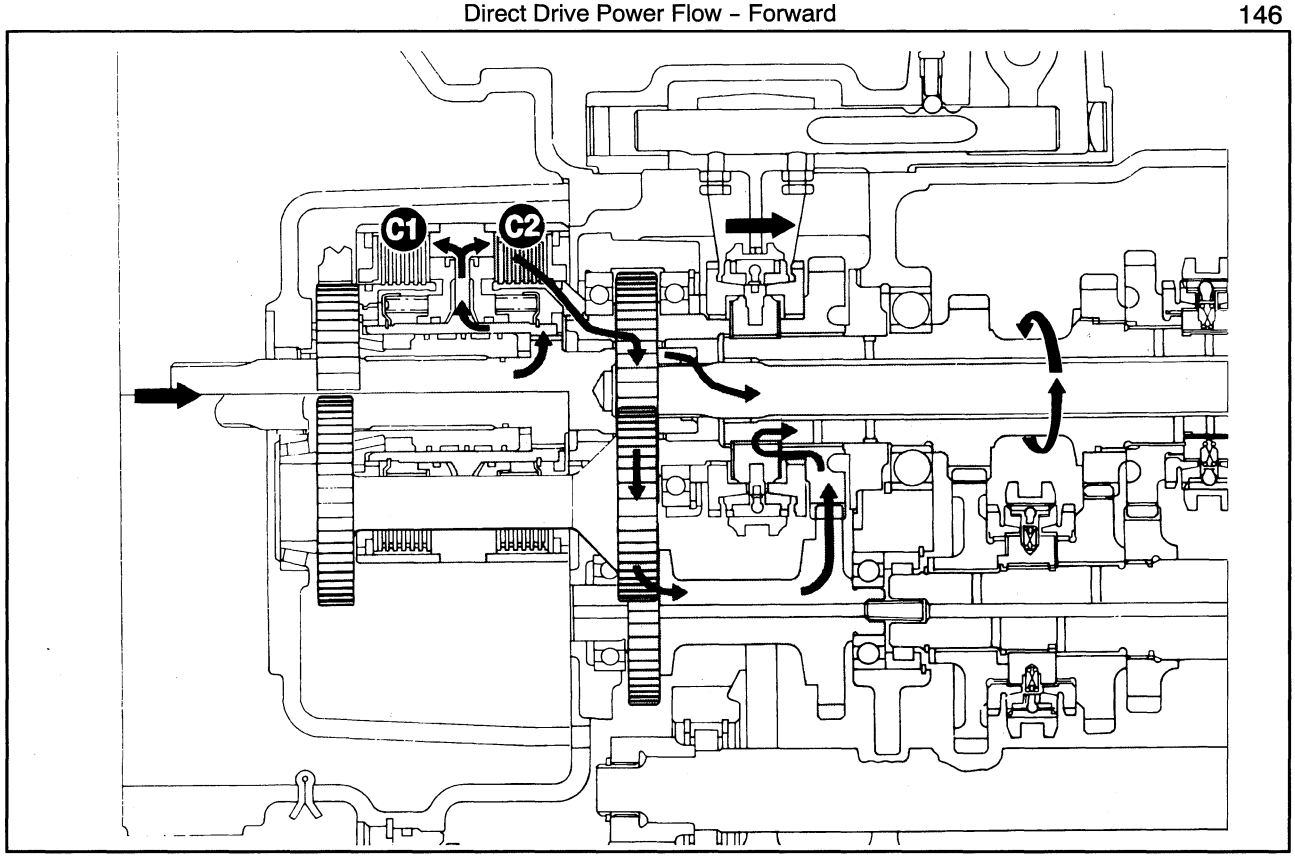

Direct Drive Power Flow - Reverse 147

ELECTRICAL SYSTEM

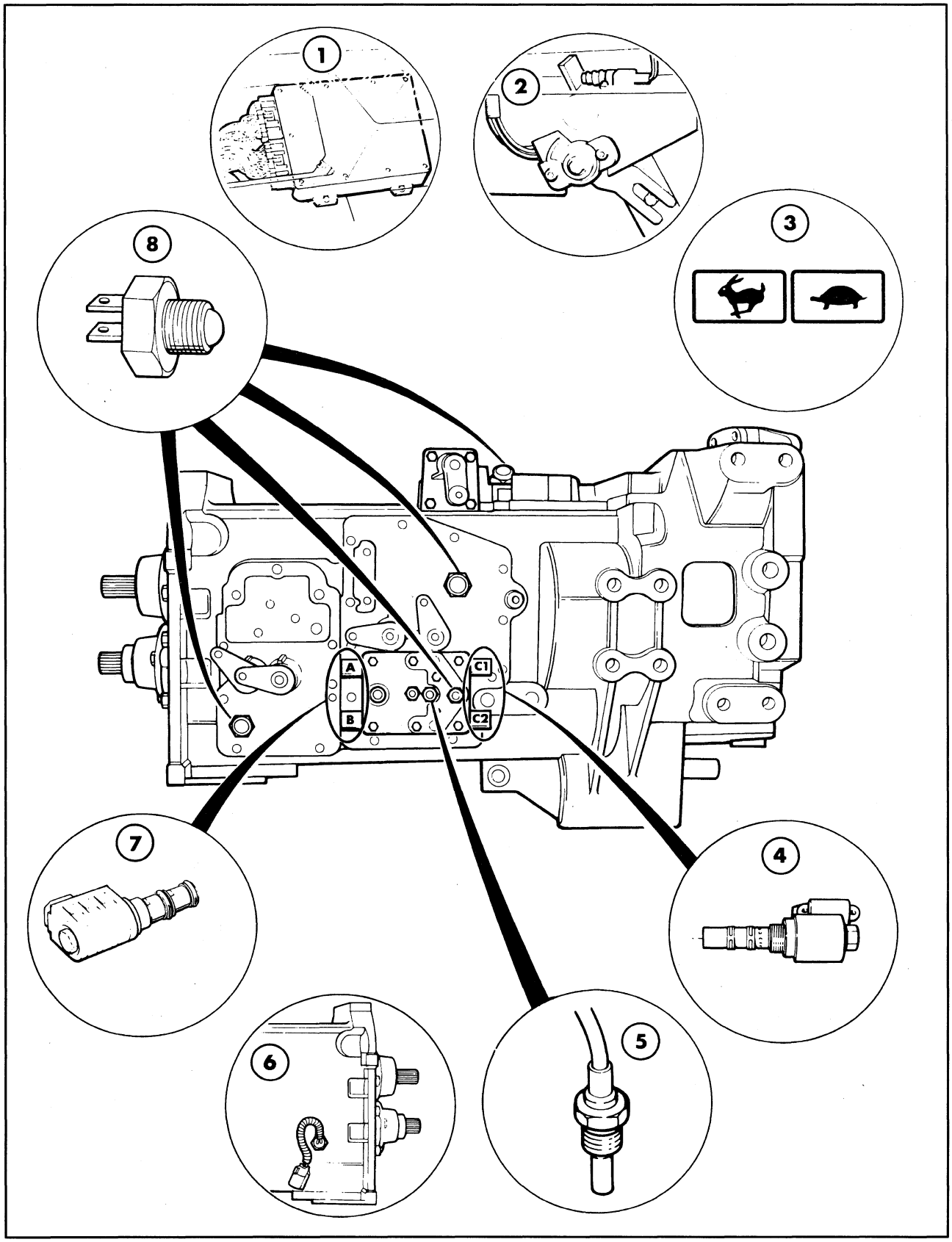

148

Components	Fig. 148 Ref.	Function (In Dual Command Circuit)
Micro Processor	1	Controls engagement/disengagement of C1/C2 clutches, via PWM and transmission dump solenoids from inputs of various switches and senders. Also monitors system for electrical faults, providing error codes for the instrument cluster.
Clutch Pedal Potentiometer	2	Provides information to micro processor to determine current provided to PWM solenoids.
Clutch Pedal Switch	2	Operates when the clutch pedal is fully depressed, de-activating the transmission dump solenoid and PWM solenoids.
Transmission Status Switches	8	Provides transmission status to micro processor. Prevents tractor drive if levers are accidentally engaged without depressing the clutch pedal. Replaces the interlock cable of standard 12x12 transmission. Forward/Reverse neutral switch prevents tractor start up if not in the neutral position.
Oil Temperature Sender	5	Provides the micro processor with oil temperature information to compensate for pressure changes with variation in oil temperature within the PWM solenoid operated hydraulic valves, this ensures a consistent clutch engagement.
Transmission Speed Sensor	6	Measures tractor transmission output speed.
Transmission Dump Solenoid	7A	Deadheads pressure oil feed from the hydraulic pump to the PWM solenoids, when transmission is in neutral or clutch pedal fully depressed.
PWM Solenoid Valves	4	Directs and controls the oil from the hydraulic pump, via the dump solenoid, to the C1/C2 clutches. Input is from the micro processor from information provided by the clutch pedal potentiometer and shift lever UD/DD switches.
Four Wheel Drive Solenoid	7B	Directs oil from the pump to the FWD assembly.
Instrument Panel Indicator Lights	3	Illuminates to indicate UD or DD selection.

Electrical Operation

Neutral

The forward/reverse shuttle lever must be in neutral to allow engine start up. The other status switches, located on the Hi/Medium, 1/2 and 3/4 shift rails provide the micro processor with the transmission status. Drive will not be permitted if any of the shift levers are engaged without the clutch pedal being depressed. With the transmission in neutral the dump valve solenoid is not energised and prevents pump oil from reaching the PWM valves. The electronics always default the transmission to the Under Drive selection on start up.

Gear Selection

The clutch pedal must be depressed prior to any shift lever engagement, if not error code 'CP' will be displayed on the instrument cluster and drive will not be permitted by the micro processor. When the clutch pedal is fully depressed and a gear/range/direction selection is made, the dump valve remains de-energised by action of the fully depressed clutch pedal operating the switch. The PWM solenoid operated valves are also de-energised with the clutch pedal fully depressed.

Inching/Feathering

As the clutch pedal is raised from the fully depressed position the dump valve solenoid becomes energised, allowing pressure oil from the pump to the PWM solenoid valve. With the system in the default, under drive mode, the PWM 1 solenoid becomes energised. As the clutch pedal is raised the clutch potentiometer provides increased voltage to the micro processor, the micro processor in turn provides increased current to the PWM 1 solenoid which regulates the pressure to the C1 clutch. As the clutch pedal and therefore current, is raised the pressure to the C1 clutch is raised correspondingly until full pressure/engagement is achieved.

Gear Shifting

As the clutch is depressed drive is disengaged between the engine and transmission as the dump valve is de-energised. Shifts are completed in the normal manner and drive is gradually re-established as the pedal is raised as described in 'inching /feathering.' The system has an electronic override feature where if the clutch is released to quickly or accidentally the micro processor will take over and control the engagement speed of the clutch to prevent sudden and possibly damaging engagements.

Drive

During continuous drive mode, clutch pedal fully released, the PWM 1 valve is fully open allowing full unrestricted pressure to the C1 clutch.

Under Drive to Direct Drive

Operation of the direct drive switch, located on the main shift lever, deselects the PWM 1 solenoid and energises the PWM 2 solenoid, pressure oil is switched to the C2 clutch. The clutch engagement time is still controlled by the micro processor during this changeover to ensure a smooth shift.

HYDRAULIC SYSTEM

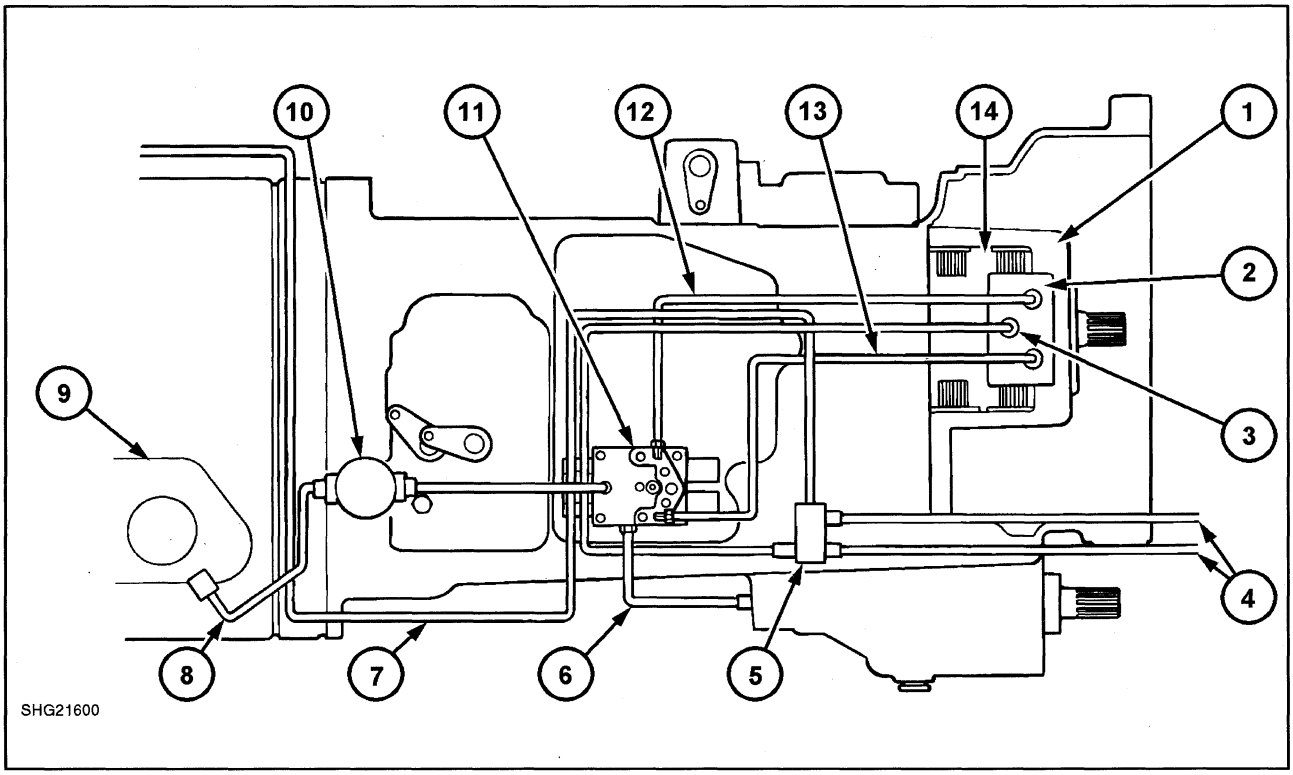

Dual Command Hydraulic System 149

1. Dual Command Assembly
2. Lube Control Valve
3. Lube Control Valve, Lube Feed
4. Oil Cooler Tubes
5. Oil Cooler By-pass Valve
6. Four Wheel Drive Feed Tube
7. Oil Cooler By-pass Valve Feed from PTO Valve Pack
8. Transmission Control Valve Feed from Pump
9. Fixed Displacement Hydraulic Pump Assembly
10. Transmission Filter
11. Transmission Control Valve Assembly
12. C1 Clutch Assembly Feed Tube
13. C2 Clutch Assembly Feed Tube
14. C1/C2 Clutch Assemblies

Components	Fig. 149 Ref.	Function (In Dual Command Circuit)
Fixed Displacement Pump	9	Supplies pressure oil at 220-260 lbf.in^2 (15.0-18.0 bar) at 2100 engine rev/min. from the low pressure side of the pump to the transmission control valve.
Transmission Control Valve	10	Receives oil from the pump. Houses PWM solenoid valves, dump and four wheel drive (where fitted) solenoids. Provides hydraulic outlets to Dual Command assembly. Also houses 1/2 shift rail staus switch and transmission oil temperature sender.
Lube Control Valve	3	Proportions the transmission lube oil depending on the operating state of the C1/C2 clutches. Ensures adequate lube to the clutches especially during inching/feathering mode.
C1/C2 Clutch Assembly	2	A dual multi plate wet clutch assembly providing either direct drive to transmission or under drive via the under drive gear assembly
Oil Cooler By-pass	5	Provides pressure regulated lube oil for the C1/C2 clutches and the transmission bearings and synchronisers.

Hydraulic Operation

Neutral

Pressure oil supplied by the pump enters the transmission control valve. The oil is channeled directly to the dump valve solenoid, which, with the transmission in neutral, is de-energised (closed), preventing pressure oil from going through to the PWM valves.

Inching/Feathering (Under Drive)

With the clutch pedal depressed and the gear/range/direction selected the transmission is still immobilised due to the dump valve remaining de-energised by the action of the clutch pedal in the fully depressed position. As the clutch pedal is raised the dump valve is energised allowing pump oil to the PWM valves. Further lifting of the clutch pedal provides a corresponding increase in oil flow through the PWM 1 valve, in this case, and a gradual engagement of the clutches in the C1 assembly.

Drive

With the clutch fully released full pressure is allowed to operate on the clutches to provide direct drive.

Gear Shifting

When shifting gear the action of fully depressing the clutch de-energises dump valve solenoid, the oil pressure to the PWM valves is cut, hence disconnecting drive between engine and transmission. As the clutch is raised hydraulic pressure is progressively restored to the clutch to continue driving.

Under Drive to Direct Drive

Operation of the direct drive switch (hare symbol), located on the main shift lever, deselects the PWM 1 solenoid and energises the PWM 2 solenoid, pressure oil is switched to the C2 clutch. The clutch engagement time is still controlled by the micro processor during this changeover to ensure a smooth shift.

LUBE CONTROL VALVE OPERATION

With reference to Figure 150.

The lube control valve consists of a lube selector spool, a direct drive cut-off valve and an under drive cut-off valve. The lube selector spool is energised by oil pressure bled from either the C1 or C2 supply oil and is centred neutral by springs. The direct drive and under drive cut-off valves are also activated by pressure oil bled from C1 for the under drive valve or C2 for the direct drive valve. Both are held in the disengaged position by a central return spring.

Early production models incorporate a relief valve within the lube control valve. This valve has no function and was removed shortly after Job 1. The relief valve for the transmission lubrication circuit is located in the P.T.O. valve pack. The relief valve operates if the pressure in the lube circuit exceeds approximately 100lbf.in^2 (6.9 bar).

Neutral - Diagram A

The dump valve solenoid is de-energised, therefore no oil pressure is in either the C1 or C2 clutches. The lube selector is held in its neutral state by the 20lb springs and both of the direct drive and under drive cut-off valves are in the disengaged state. Oil from the oil cooler by-pass valve passes through the selector valve and in this neutral condition, restricted oil flows to both direct drive and under drive clutches. Unrestricted oil is allowed to flow through the selector spool through to the transmission synchronisers and bearings.

Inching/feathering (Direct Drive) - Diagram B

As the clutch pedal is released and oil pressure to the C2 clutch assembly and subsequently the lube selector valve, begins to increase, the lube selector spool moves across against the neutralising spring, at approximately 20lbf.in^2 the selector spool is fully engaged. In this position full lubricating oil flow is directed to the direct drive (C2) lube cut-off valve. The lube cut-off valve is in the open position until a pressure of 110-120lbf.in^2 is attained in the C2 clutch line. Therefore between 20lbf.in^2 and 110-120lbf.in^2 the clutches in the C2 clutch receives the majority of the lube oil, which is during the inching/feathering period when the oil is most required. During this period a small amount of restricted lube oil is directed to the transmission synchronisers and bearings and to the under drive assembly.

Drive - Diagram C

When the clutch pedal is raised sufficiently, to provide the tractor with full drive, the oil pressure to the clutch assembly will exceed 120lbf.in^2. At this point the direct drive lube cut-off valve spool moves across to the cut-off position, providing the transmission synchronisers with unrestricted oil flow and restricted oil to the now fully engaged C2 clutch and disengaged C1 clutch.

The oil distribution is reversed when under drive is selected, i.e, C1 receives the unrestricted flow during inching/feathering.

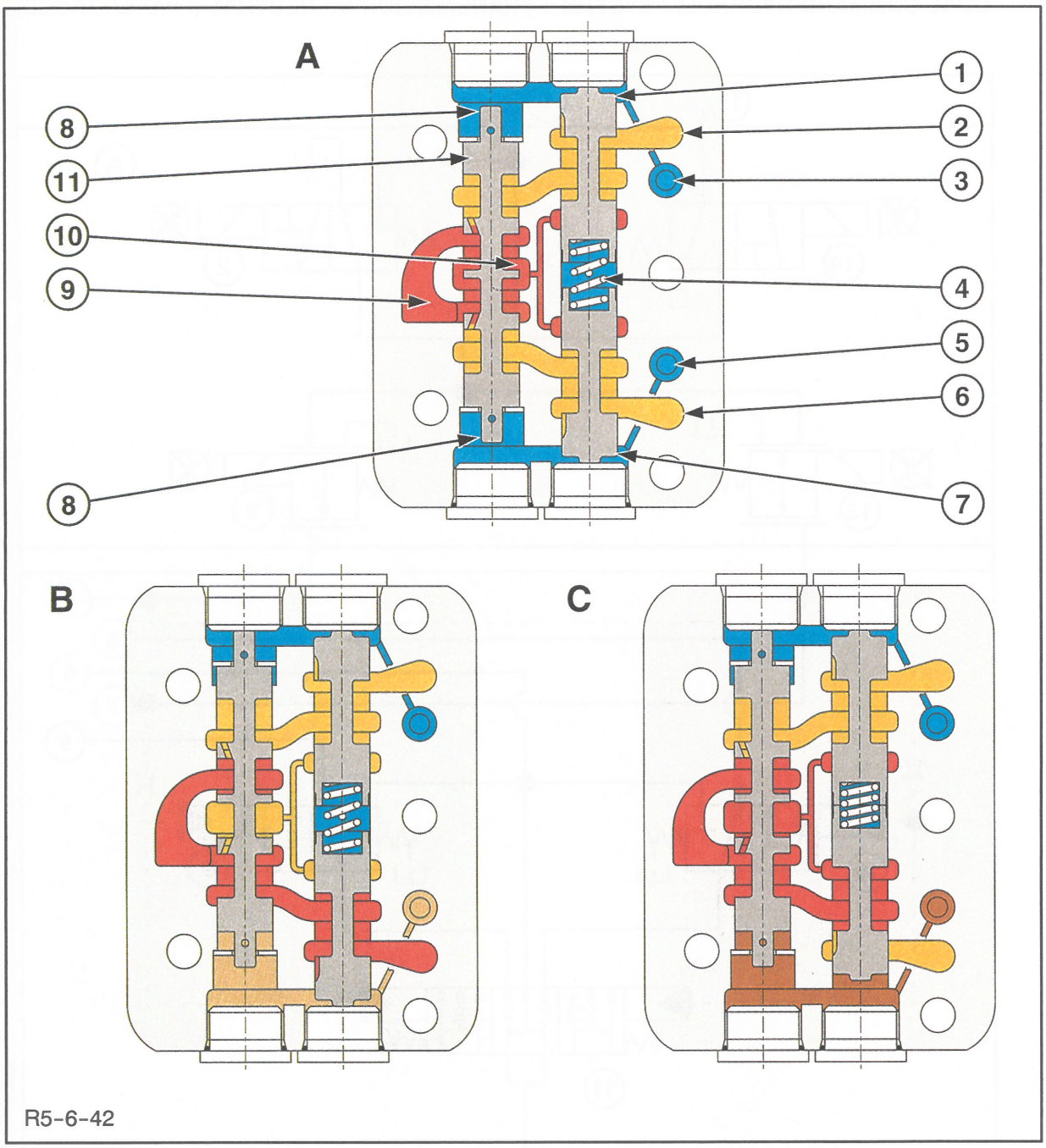

150

Lube inlet from oil cooler by-pass valve

Restricted lube oil

Oil to dump

C1/C2 clutch oil greater than 120lbf.in2 (8.3 bar)

C1/C2 clutch oil less than 120lbf.in^2 (8.3 bar) but greater than 20lbf.in^2 (1.4 bar)

Lube Control Valve Operation

A - Transmission in neutral

B - Direct drive, inching/feathering

C - Direct drive, driving

1. C1 Lube Cut off Valve Spool
2. C1 Lube Feed
3. Pressure Bleed from C1 Clutch
4. Spring - 120 lb.
5. Pressure Bleed from C2 Clutch
6. C2 Lube Feed
7. C2 Lube Cut-off Valve Spool
8. Selector Spool Centralising Spring
9. Lube Feed from Oil Cooler By-pass Valve
10. Transmission Bearing and Synchroniser Feed
11. Selector Valve Spool

DUAL COMMAND HYDRAULIC SYSTEM -TRANSMISSION IN NEUTRAL (FWD ENGAGED)

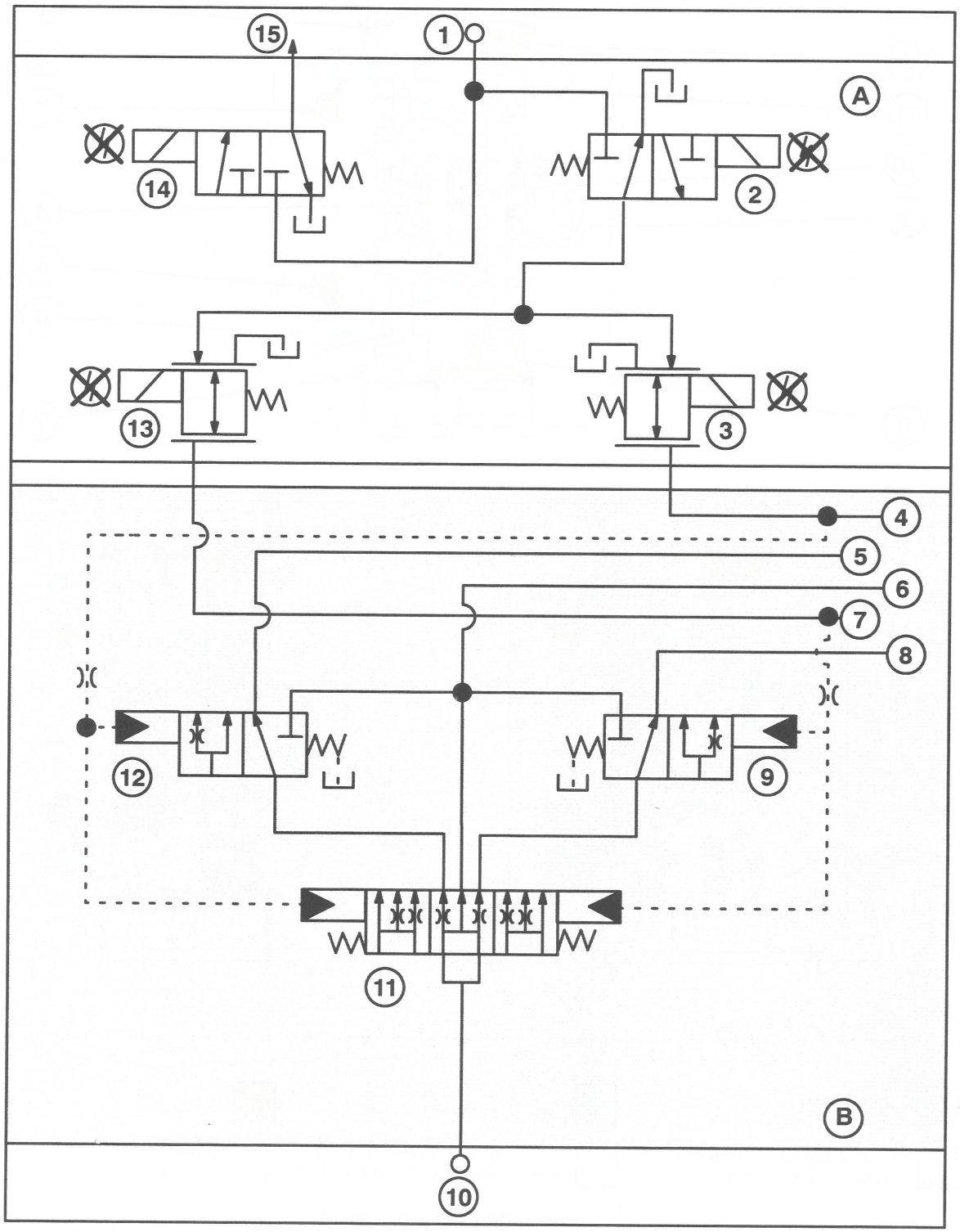

151

A. Transmission Control Valve

1. Regulated oil feed from low pressure side of the fixed displacement pump.
2. Dump solenoid
3. PWM 2 solenoid
4. Direct drive (C2) clutch pressure feed
5. Direct drive (C2) clutch lube oil
6. Lube oil feed to transmission bearings and synchronisers
7. Under drive (C1) clutch pressure feed

B. Lube Control Valve

8. Under drive (C1) clutch lube oil
9. Under drive lube cut-off valve
10. Lube oil feed from oil cooler by-pass valve
11. Lube selector valve
12. Direct drive lube cut-off valve
13. PWM 1 solenoid
14. Four wheel drive solenoid
15. Outlet to four wheel drive assembly

DUAL COMMAND HYDRAULIC SYSTEM - TRANSMISSION IN DIRECT DRIVE, INCHING/FEATHERING (FWD ENGAGED)

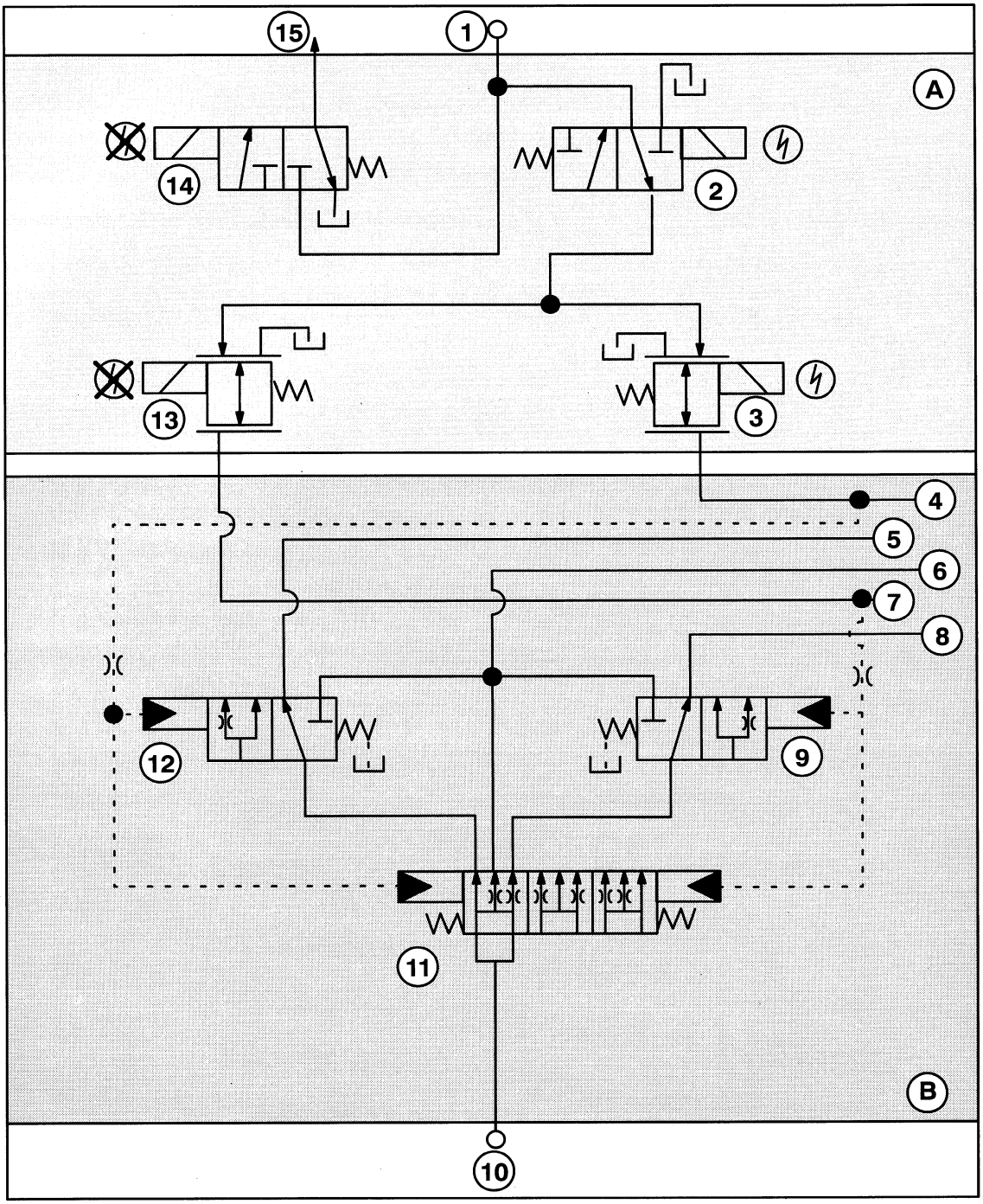

A. Transmission Control Valve **B**. Lube Control Valve 152

1. Regulated oil feed from low pressure side of the fixed displacement pump.
2. Dump solenoid
3. PWM 2 solenoid
4. Direct drive (C2) clutch pressure feed
5. Direct drive (C2) clutch lube oil
6. Lube oil feed to transmission bearings and synchronisers
7. Under drive (C1) clutch pressure feed
8. Under drive (C1) clutch lube oil
9. Under drive lube cut-off valve
10. Lube oil feed from oil cooler by-pass valve
11. Lube selector valve
12. Direct drive lube cut-off valve
13. PWM 1 solenoid
14. Four wheel drive solenoid
15. Outlet to four wheel drive assembly

DUAL COMMAND HYDRAULIC SYSTEM - TRANSMISSION IN DIRECT DRIVE, DRIVE MODE (FWD DISENGAGED)

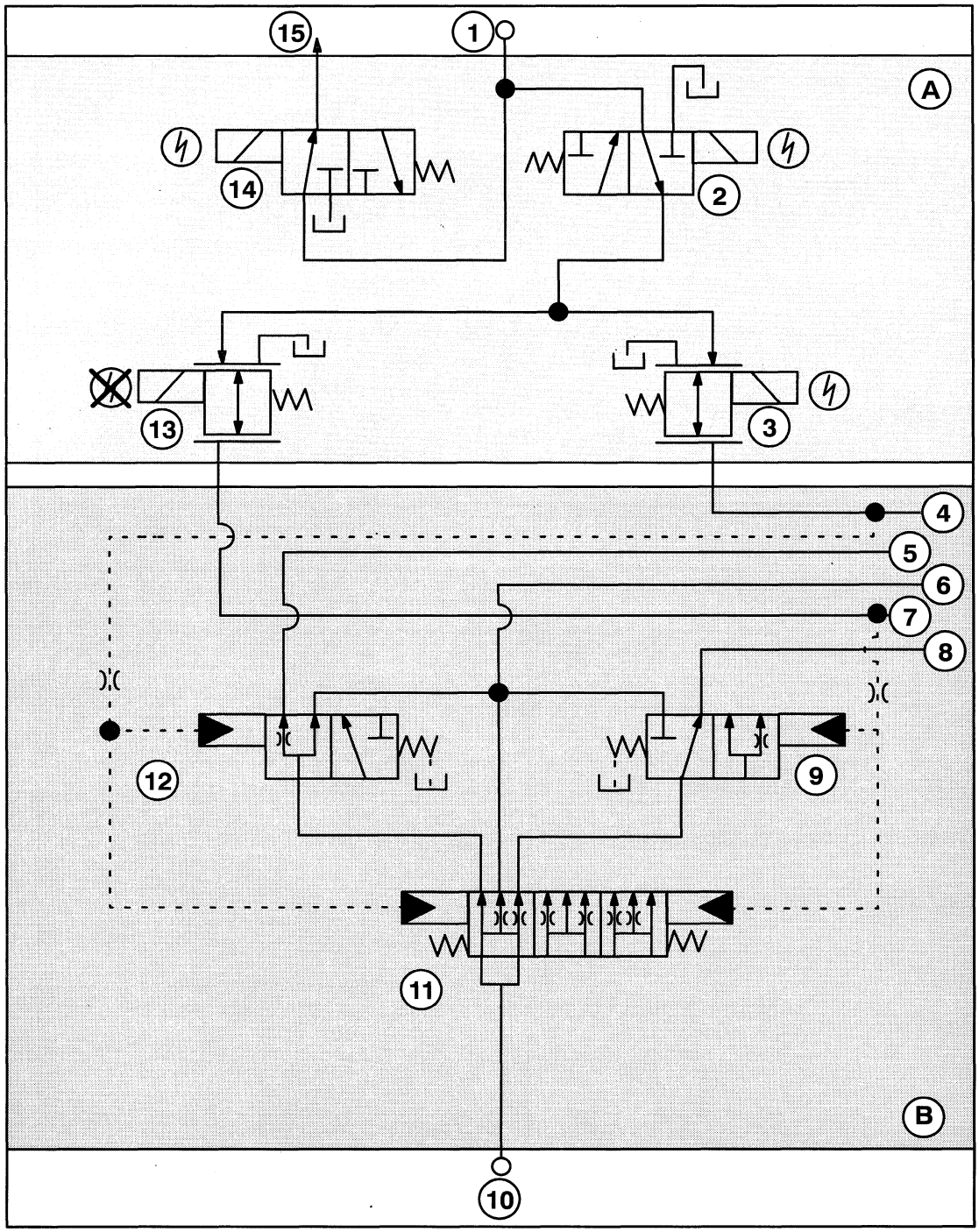

A. Transmission Control Valve **B**. Lube Control Valve 153

1. Regulated oil feed from low pressure side of the fixed displacement pump.
2. Dump solenoid
3. PWM 2 solenoid
4. Direct drive (C2) clutch pressure feed
5. Direct drive (C2) clutch lube oil
6. Lube oil feed to transmission bearings and synchronisers
7. Under drive (C1) clutch pressure feed
8. Under drive (C1) clutch lube oil
9. Under drive lube cut-off valve
10. Lube oil feed from oil cooler by-pass valve
11. Lube selector valve
12. Direct drive lube cut-off valve
13. PWM 1 solenoid
14. Four wheel drive solenoid
15. Outlet to four wheel drive assembly

DUAL COMMAND HYDRAULIC SYSTEM - TRANSMISSION IN UNDER DRIVE, INCHING/FEATHERING (FWD ENGAGED)

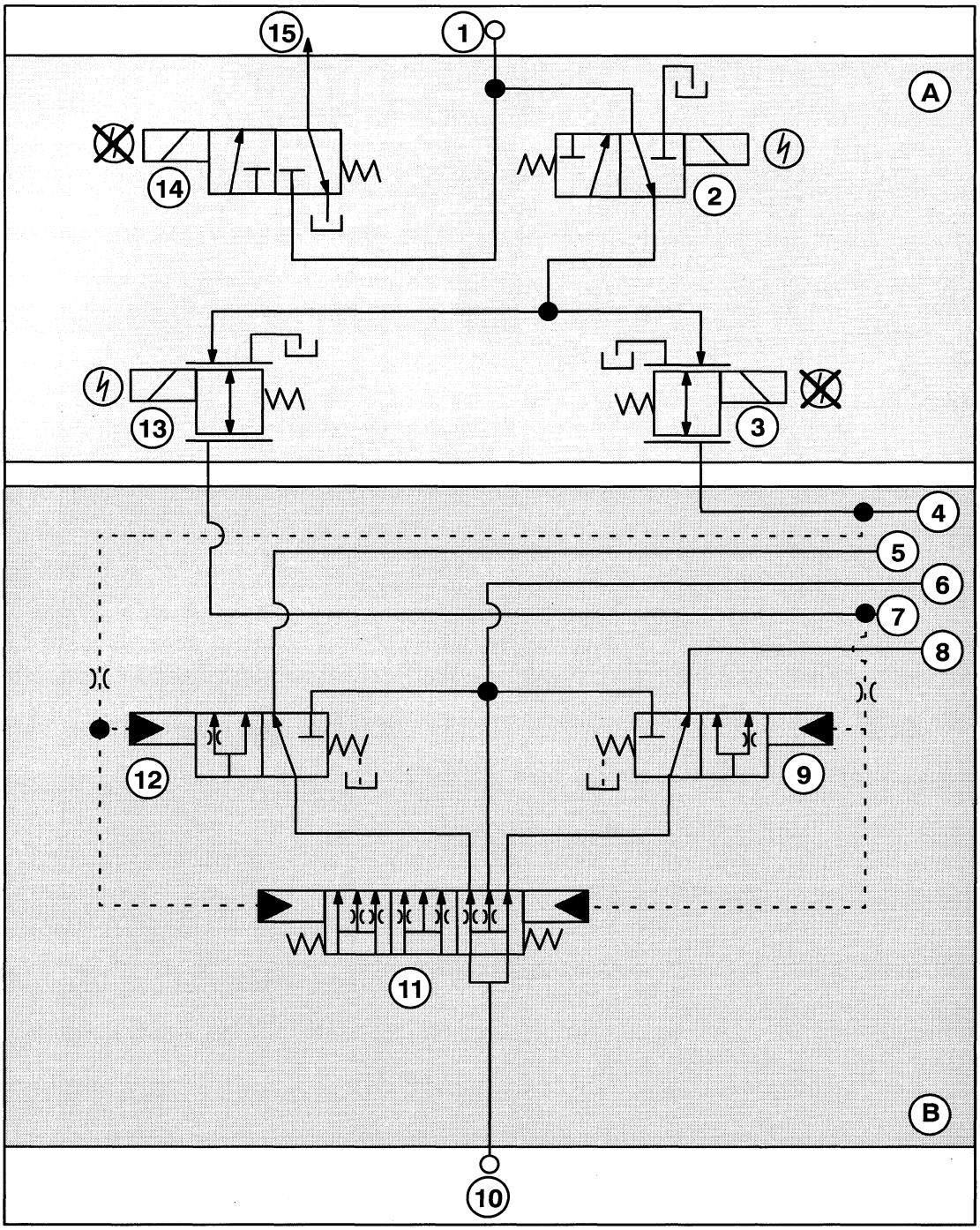

A. Transmission Control Valve **B**. Lube Control Valve 154

1. Regulated oil feed from low pressure side of the fixed displacement pump.
2. Dump solenoid
3. PWM 2 solenoid
4. Direct drive (C2) clutch pressure feed
5. Direct drive (C2) clutch lube oil
6. Lube oil feed to transmission bearings and synchronisers
7. Under drive (C1) clutch pressure feed
8. Under drive (C1) clutch lube oil
9. Under drive lube cut-off valve
10. Lube oil feed from oil cooler by-pass valve
11. Lube selector valve
12. Direct drive lube cut-off valve
13. PWM 1 solenoid
14. Four wheel drive solenoid
15. Outlet to four wheel drive assembly

DUAL COMMAND HYDRAULIC SYSTEM - TRANSMISSION IN UNDER DRIVE, DRIVE MODE (FWD DISENGAGED)

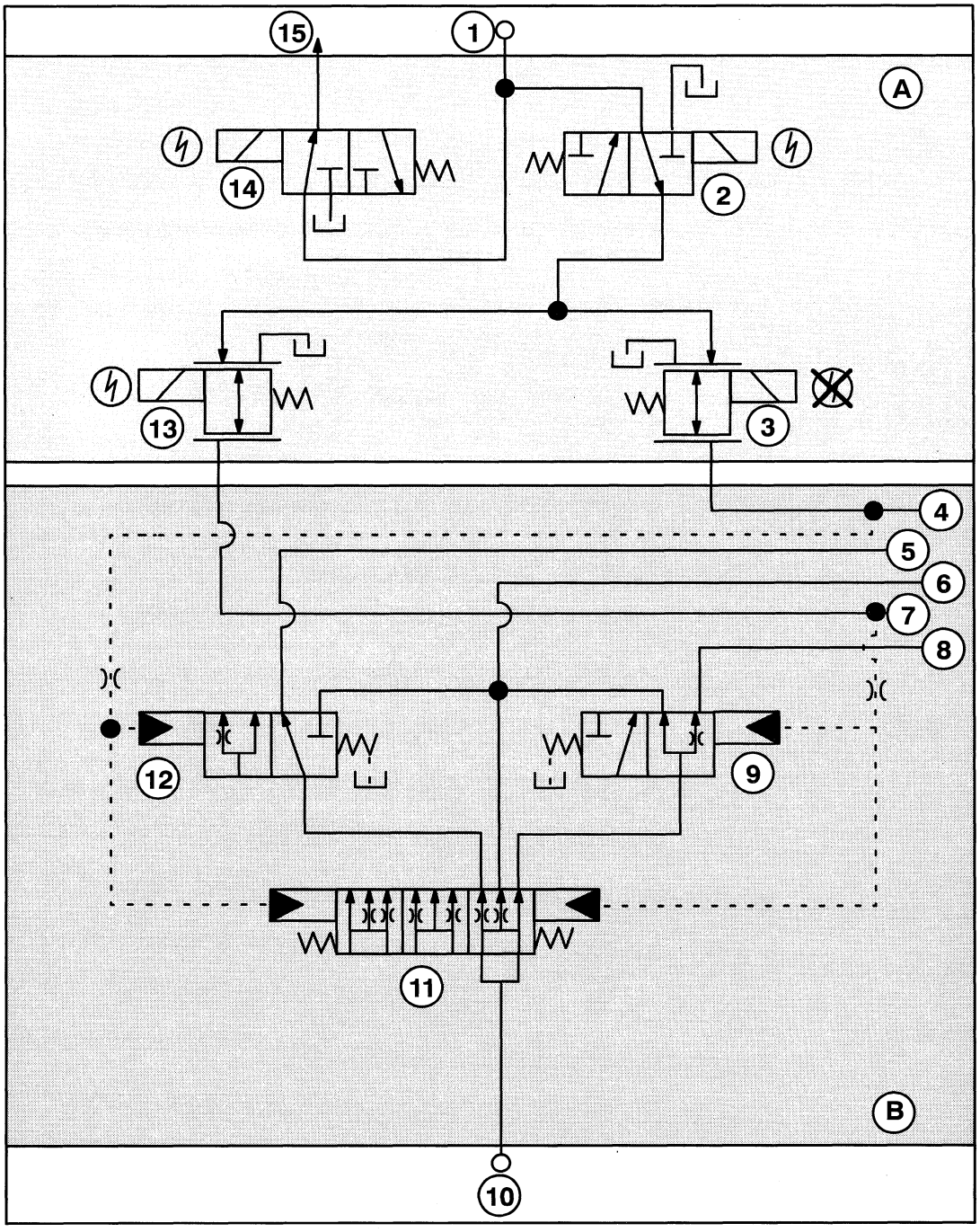

155

A. Transmission Control Valve

B. Lube Control Valve

1. Regulated oil feed from low pressure side of the fixed displacement pump.
2. Dump solenoid
3. PWM 2 solenoid
4. Direct drive (C2) clutch pressure feed
5. Direct drive (C2) clutch lube oil
6. Lube oil feed to transmission bearings and synchronisers
7. Under drive (C1) clutch pressure feed
8. Under drive (C1) clutch lube oil
9. Under drive lube cut-off valve
10. Lube oil feed from oil cooler by-pass valve
11. Lube selector valve
12. Direct drive lube cut-off valve
13. PWM 1 solenoid
14. Four wheel drive solenoid
15. Outlet to four wheel drive assembly

TROUBLE SHOOTING, LIMP HOME, CALIBRATIONS AND PRESSURE TESTING

The transmission / EDC electronic management system has an inbuilt self diagnostic facility which is able to store up to 30 different errors with the hours of occurence. This facility utilises the digital display of either the EIC or AEIC instrument panels to indicate, in coded format, any malfunction in the electrical and electronic circuitry and in the processor.

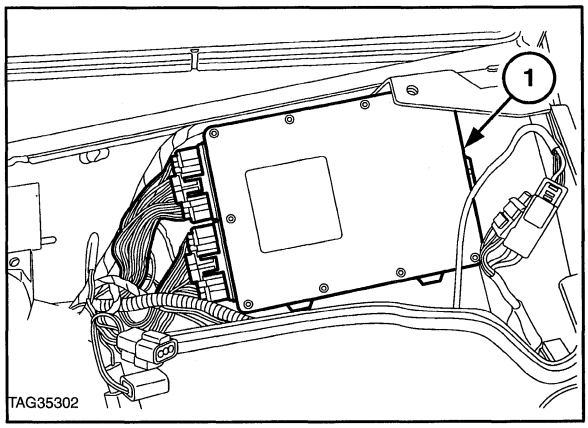

156

It should be noted that the self diagnostic capability is generally limited to diagnosis of the electrical and electronic circuitry and related components, however, there are some codes, which can be generated if pressure switch circuits are not closed because of an actual lack of hydraulic pressure.

Any malfunction of the mechanical and hydraulic components must be diagnosed using conventional techniques, performance characteristics and tooling, such as pressure testing equipment. Full guidance for both electrical self diagnosis and conventional diagnosis is contained within this section.

Trouble-shooting and fault finding should always be carried out in a logical and planned sequence, many apparent faults associated with electronic components are often hastily diagnosed and result in the replacement of expensive components. An extra few minutes confirming the apparent fault will result in a more positive and cost effective repair.

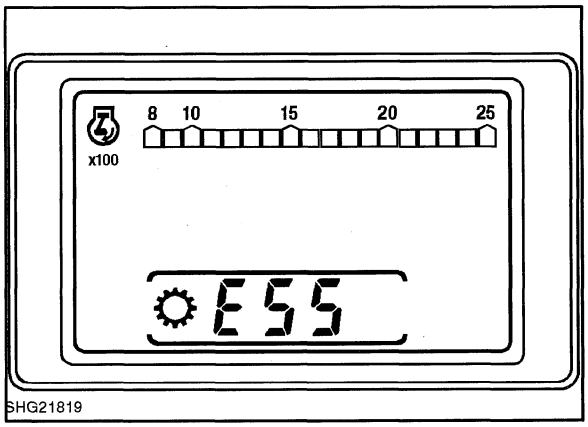

157

Prior to detailed fault finding, items like the earth points and Battery should be cleaned and tested to ensure that they are functioning correctly.

With the use of micro-processors it is often that this item is blamed for any malfunction but the real truth is that this item is usually sound and that the fault is due to poor contacts in the associated connectors.

Each connector illustrated and identified in the wiring diagrams in Section 3 and referred to in the following fault finding procedure, has the same identification reference. For example, the main processor connectors are referred to as Connectors C127 and C128 in the illustration and also referred to as C127 and C128 in the fault finding procedure. Often in the fault finding flow chart the connector and pin are abbreviated and will read, for example, C127-10. The C127 refers to the connector and the 10 to the pin number.

Section 3 contains complete wiring diagrams, connector identifications and a list of circuit numbers as used within the circuit diagrams.

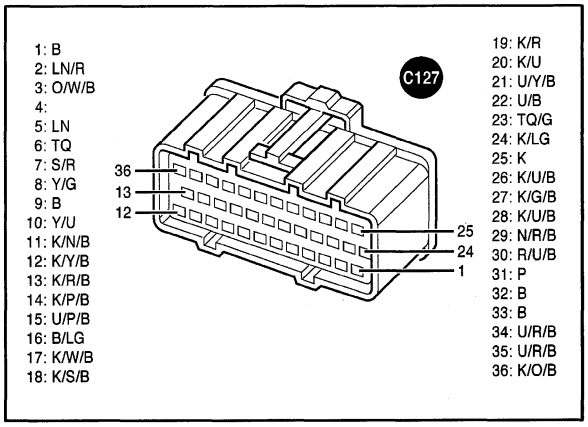

158

Where the fault finding procedure requires checks for continuity a visual inspection of the wiring should be made prior to conducting tests to ensure that obvious 'mechanical' damage has not occurred to the harness or the connectors.

Where possible the inbuilt tractor diagnostics should be utilised to determine the area of the fault.

The 'H' menu mode, described in Section 55, provides several modes to aid diagnosing faults. One particular mode which should be used, before any connections are split, is the H5, switch diagnostics mode. This will provide testing of many switch circuits, including the switch itself. If this mode highlights a fault within a circuit then more detailed fault finding can be directed towards a particular circuit.

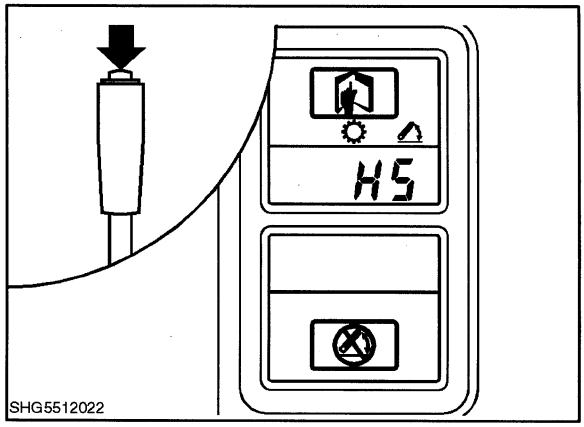

159

A good quality multi-meter is an essential item to perform fault finding. It should be capable of measuring resistance of at least 20,000 ohms and measuring voltage and current. When using the multi-meter it is good practice to select a high range and work downwards to avoid damaging the instrument.

Where possible it is recommended that connectors are probed from the rear, certain connectors like C079, C080 and C081, instrument panel connectors, should always be probed from the rear. Connector terminals should only be removed using the special tools supplied in electrical repair kit, Tool No.4FT.953 and the wires should not require excessive pulling efforts to remove.

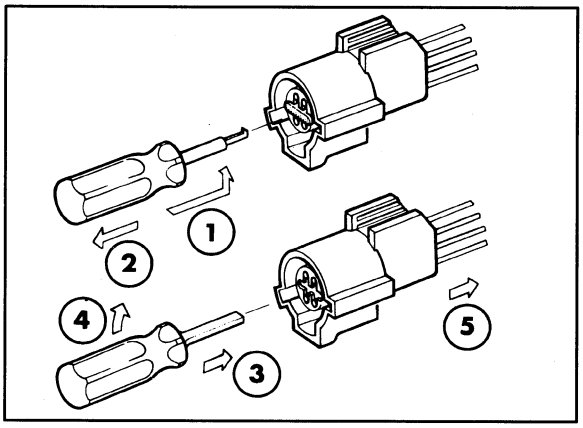

160

Where only front probing is practical it is recommended that Connector test probe kit, Tool No NH.55-125 is obtained. This provides all connector terminal attachments for use with most multi-meters.

IMPORTANT: *Care should be used when using the multi-meter, only use the instrument as instructed to avoid damage to the internal elements of the micro-processor. When checking the continuity of wiring, sensors or switches it is necessary to isolate the electronic micro-processor and ensure the keystart is turned off to prevent possible further damage. The keystart should only be switched on and the processor connected where specifically instructed in the fault finding procedure.*

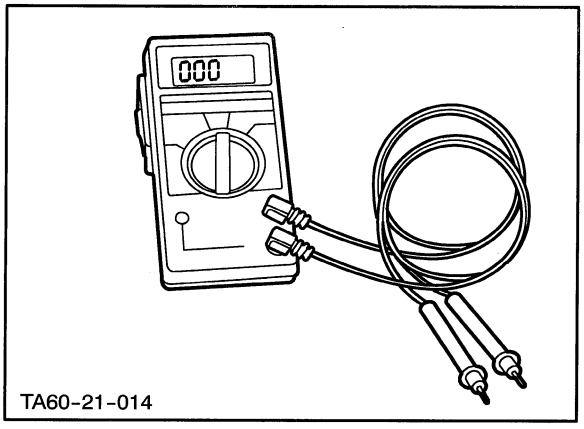

161

If it is found necessary to clean the connectors a contact spray should be used. DO NOT USE ANY OTHER METHOD FOR CLEANING TERMINALS. Do not use a cleaner that contains Trichloro-ethylene, this solvent will damage the plastic body of the connector. It is preferable to use a cleaner with a Freon T.F. base.

Limp Home Procedure

In the unlikely event of an electrical fault developing within the powershift transmission that renders the tractor immobile, for example, failure of the wiring or supply voltage to the PWM valves, the emergency 'Limp Home Harness', Special Tool No. FNH00375, is available to enable the tractor to be driven onto a transporter or hard standing, in order that the repair can be carried out in a suitable location. The Limp Home device **is not and must not** be used as a means to continue operating the tractor in its work environment.

To engage and operate the 'Limp Home Harness' proceed as follows:-

1. Apply the parking brake.

2. Stop the engine and turn keystart off

3. Disconnect both of the PWM valve connectors and the dump solenoid connector. Connect the Limp Home harness extension connectors to the C1 (2) PWM and dump solenoid valve (1).

NOTE: *The use of Limp home harness adaptor, Tool No. FNH00375 is required to enable the connection of Tool FNH00375 to the dump solenoid.*

4. Connect the other end of the Limp Home harness to the 'D1' diagnostic plug (2) located adjacent to the fuse box.

5. Place the range lever into **Low Range** and the main shift lever into **1st Gear.** Ensure the forward/reverse lever is in **Neutral.**

NOTE: *It is important that only the lowest ranges are used when operating with the Limp Home Harness due to the feathering capability of the transmission being inoperative.*

6. Start the vehicle.

7. Select forward or reverse.

8. Operate the momentary switch (1) of the Limp Home Harness to move the vehicle. If necessary, depress the foot throttle to increase engine speed.

9. When the tractor has been delivered to the repair area, disconnect the Limp Home Harness and reconnect the PWM valve connectors and proceed with diagnosing and repairing the fault.

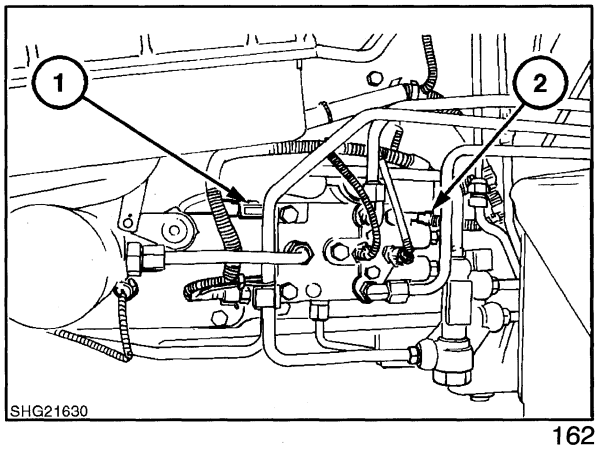

162

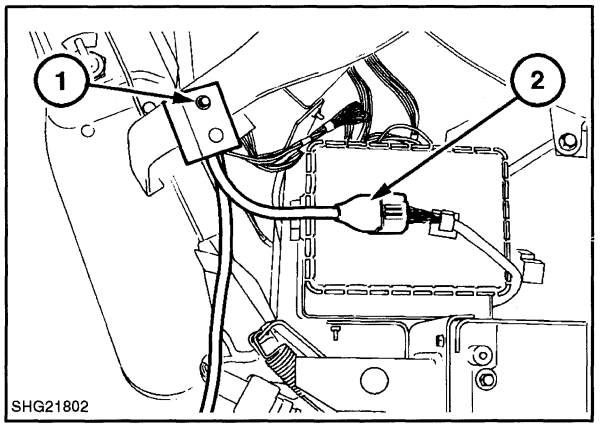

163

PRESSURE TESTING

Pressure ports are provided on the transmission control valve to enable the transmission clutches to be tested to determine the correct function of a number of system components. Components such as solenoids, clutch pedal operation and micro-processor can be seen to be operating correctly by the results of pressure testing.

NOTE: *Prior to pressure testing, make certain that all the points detailed under the tractor preparation are carried out to ensure maximum safety.*

Tractor Preparation

1. Start the tractor and run until the transmission oil has reached its normal operating temperature of at least 60°C (156°F) measured at the temperature sensor(s).

2. Apply the handbrake.

3. Disconnect the connector to the High/medium status switch (1) and install a suitable bridging wire between the two connector pins on the harness side. With a bridging wire installed, the processor receives a signal indicating that either high or medium is selected, although the **HIGH/MEDIUM RANGE LEVER remains in NEUTRAL** throughout the testing.

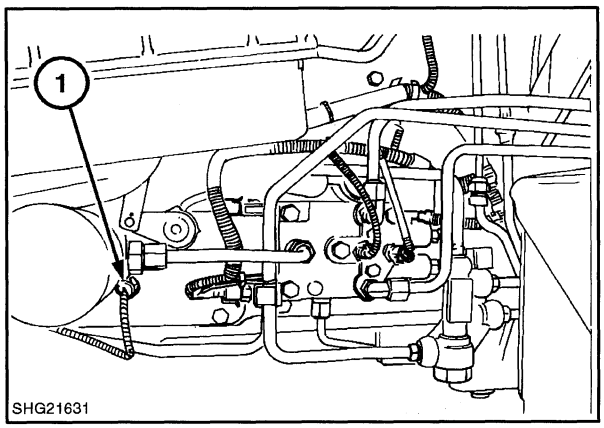

164

C1/C2 Clutch Engagement and Disengagement

1. Install pressure gauges into the C1 (1) and C2 (2), test ports.
2. Leave the High/Low/Medium range lever in **NEUTRAL**, position the main shift lever into **1st GEAR** and the shuttle lever in **FORWARD**. Set the engine speed to 1500 rev/min. Observe the reading on the gauges.

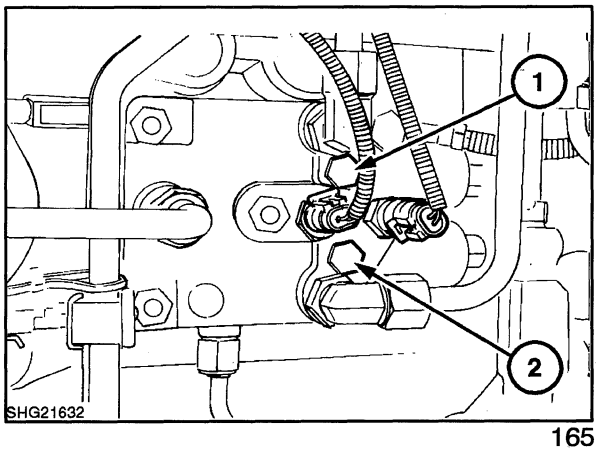

165

NOTE: *For observing the system operation set the engine speed to 1500 rev/min. For Testing for maximum pressure in each clutch set the engine speed to 2100 rev/min.*

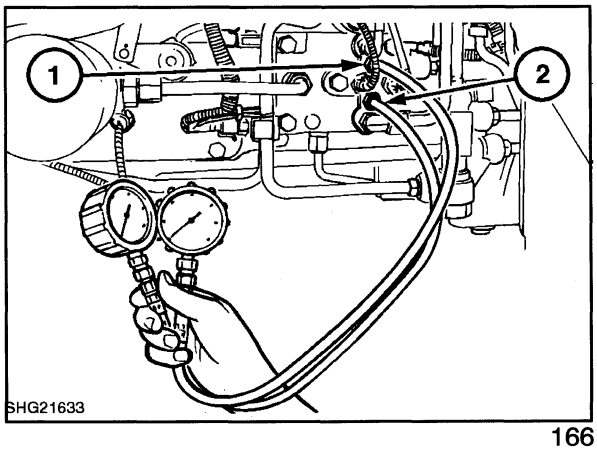

166

Table 1 - Dual Power Pressure Testing

Clutch Pedal	C1	C2	Observations
	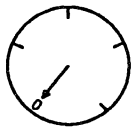	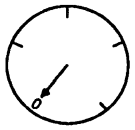	**Direct Drive Selected** Pressure on C1 and C2 should be zero. Indicates dump valve solenoid operational
	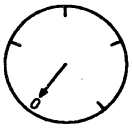		Releasing clutch pedal from fully depressed position should smoothly and gradually restore clutch 2 to full pressure. Clutch 1 should remain at zero. Indicates correct PWM 2 and clutch pedal potentiometer operation.
	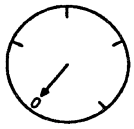	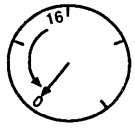	Depressing clutch pedal should progressively reduce pressure in C2, until with pedal fully depressed zero pressure should be indicated. Indicates correct PWM 2, clutch potentiometer and dump valve solenoid operation.
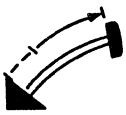	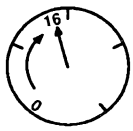	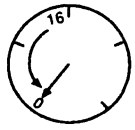	**Switch from Direct Drive to underdrive** C2 pressure should reduce to zero, C1 pressure should rise to full pressure. This should appear to be an instantaneous operation with just a slight overlap of pressure between the clutches. Indicates correct operation of both PWM valve solenoids
	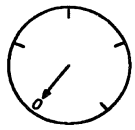	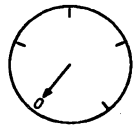	**Under Drive Selected** Pressure on C1 and C2 should be zero. Indicates dump valve solenoid operational
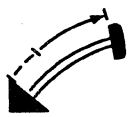	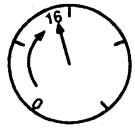	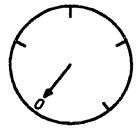	Releasing clutch pedal from fully depressed position should smoothly and gradually restore clutch 1 to full pressure. Clutch 2 should remain at zero. Indicates correct PWM 1 and clutch pedal potentiometer operation.
	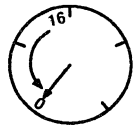	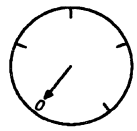	Depressing clutch pedal should progressively reduce pressure in C1, until with pedal fully depressed zero pressure should be indicated. Indicates correct PWM 1, clutch potentiometer and dump valve solenoid operation.
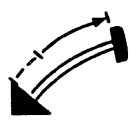	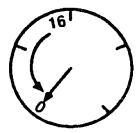	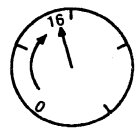	**Switch from Underdrive to Direct Drive** C1 pressure should reduce to zero, C2 pressure should rise to full pressure. This should appear to be an instantaneous operation with just a slight overlap of pressure between the clutches. Indicates correct operation of both PWM valve solenoids

Pressure Testing Notes:

1) Maximum pressure should be between 220-260 lbf.in^2 (15.0-18.0 bar). If maximum pressure is attained in only one of the clutches, suspect a fault in that clutch circuit, e.g. leaking clutch seals, faulty PWM valve. The pressure at 1500 rev/min. should be between 200-240 lbf.in^2 (13.8-16.5 bar).
2) If the pressure is low on both clutches this may indicate a faulty dump solenoid valve or a fault in the hydraulic supply circuit.
3) Sudden, irregular rises or drops in pressure as the clutch pedal is operated may indicate a faulty clutch potentiometer if it occurs in both underdrive and direct drive, or a faulty PWM valve if it occurs in only one of the drives.
4) If the pressure comes on suddenly as the clutch pedal is raised this may indicate that the clutch pedal switch is incorrectly adjusted.
5) If the pressure is not at absolute zero with the clutch pedal fully depressed this may also indicate a maladjusted clutch switch or a possible fault with the dump solenoid valve.

TRANSMISSION CLUTCH CALIBRATION (CLUTCH BITE POINT)

Required when any of the following items have been performed or noticed:-

- The microprocessor has been replaced.
- The non volatile memory of the processor has been reset (Mode H8 Performed).
- A clutch PWM solenoid valve has been replaced.
- The shift quality or clutch featherability has noticeably deteriorated.

Set Up Procedure:

Prior to conducting a transmission clutch calibration, the following points should be checked.

- The temperature of the transmission oil is at normal working temperature.
- The parking brake is applied
- The air conditioning, if fitted, is switched off.
- All electrical and hydraulic services are deselected.

WARNING: *The calibration procedure is controlled by the electronic management system. To prevent inadvertent movement of the tractor. Park the tractor away from any obstacles, firmly apply the parking brake and block the wheels, front and rear.*

CLUTCH SPRING PRESSURE CALIBRATION

Connect diagnostic test switch FNH00874.

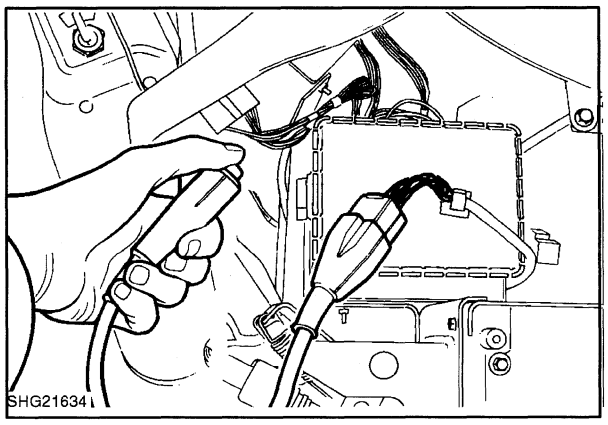

167

Start the engine.
Select mode HF, using the test switch.

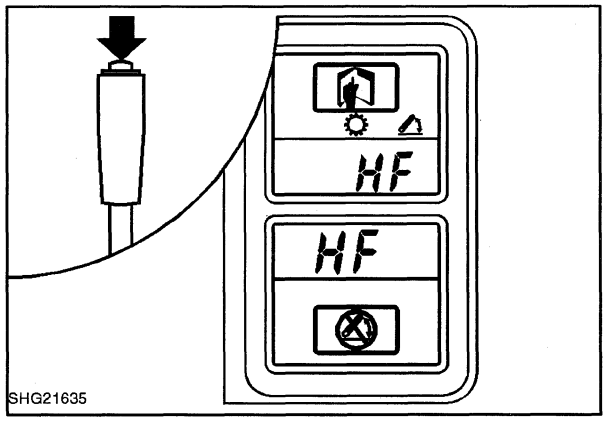

168

"CAL" will be displayed for a few seconds, then the display will be controlled by clutch pedal position as follows:
Pedal down (below 10%) - Calibration value for the selected clutch is displayed.
Pedal up (above 98%) - Oil temperature is displayed.
Pedal between 10% and 98% - Pedal position is displayed.

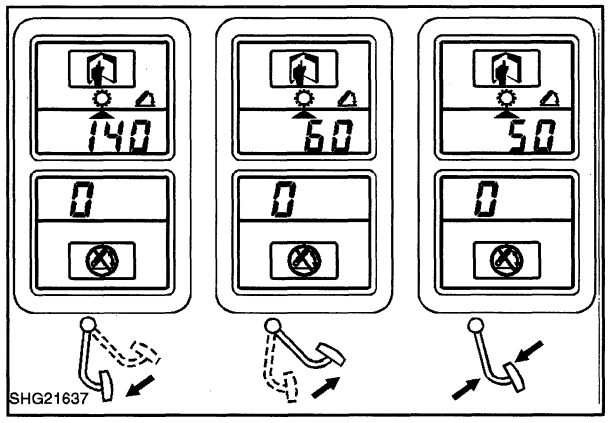

169

Set engine speed to 1200 +/- 100 rpm.

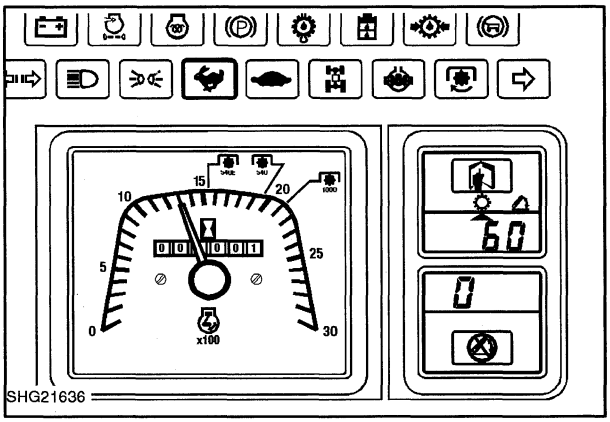

170

3. To select the clutch to be calibrated, shift the main (1-4) lever to neutral and press the upshift switch to select the high clutch, or press the downshift switch to select the low clutch. The selected clutch is indicated by the tortoise and hare lamps.

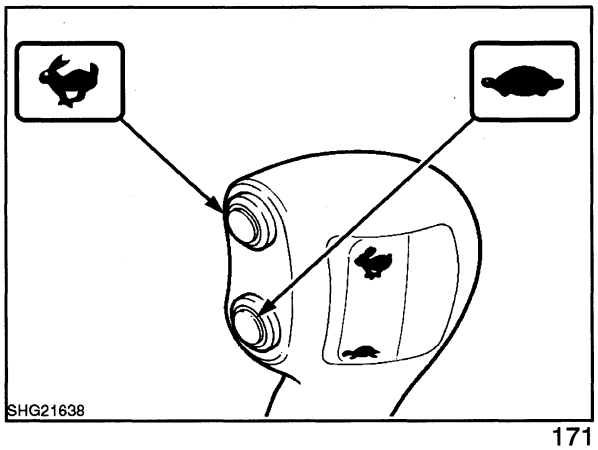

171

4. Depress the clutch pedal, select a gear and range, and slowly release the pedal to check the engagement point.

Note 1: *Releasing the pedal beyond 35% will not further increase the clutch pressure.*

Note 2: *If the pedal is released above 90%, the clutch pressure will dump after a few seconds. Fully depress the pedal to restore operation.*

Note 3: *If the calibration value has previously been set too high, the clutch may engage and move the tractor, particularly if a low gear has been selected and the brake is not firmly engaged. If calibration is required because a PWM valve has been replaced, the calibration number should be reduced to 110 or less before releasing the clutch pedal, as the old calibration value may be much too high.*

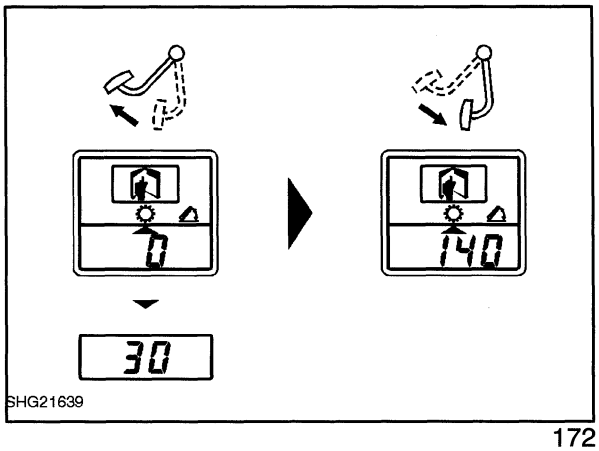

172

5. Use the upshift switch to increase the calibration value or use the downshift switch to decrease the calibration value as required to move the clutch engagement point to 35% pedal travel. The value can be adjusted even when it is not being displayed.
6. After calibrating both clutches, turn off the key switch for at least 1 second to store the calibration values.

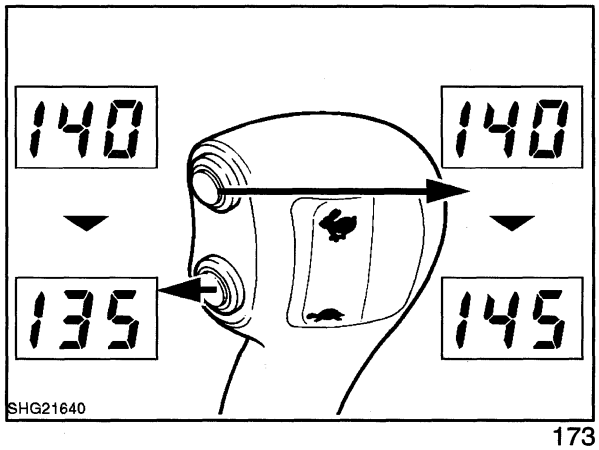

173

CLUTCH QUICK FILL ADJUSTMENT

Warm the oil to normal operating temperature, at least 60 degrees Celsius (156°F).

Park the tractor on a level surface. Allow some space, as the tractor will move during testing.

With the diagnostic switch installed, start the engine and set the engine speed to 1200 rpm. Select diagnostic mode HE.

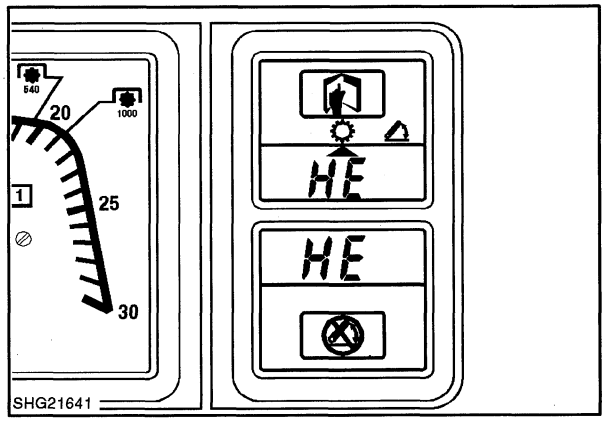

174

If the oil temperature is less than 60 degrees Celsius (156°F), "F1" will be displayed, Alternating with display of oil temperature. This display WILL NOT GO AWAY unless the oil temperature reaches 60 degrees.

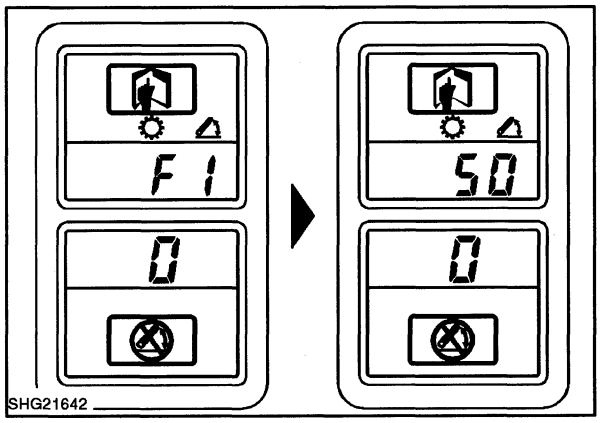

175

CLUTCH SELECTION:

While the 1-4 lever is in neutral, press the downshift switch to select the Lo clutch or press the upshift switch to select the Hi clutch. The selected clutch will be indicated at all times by an L or an H in the left digit of the transmission LCD display. The number to the right of the L or H indicates the quickfill duration for the selected clutch.

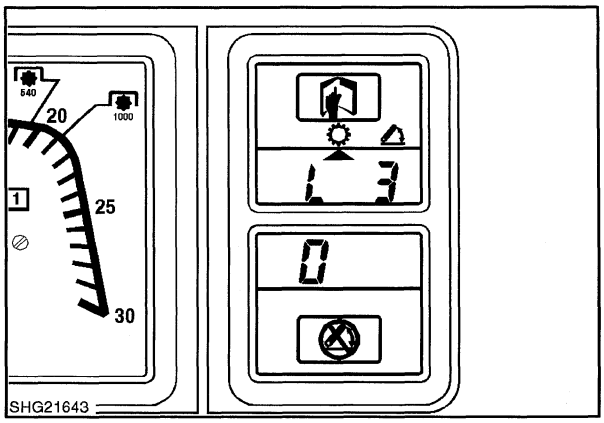

176

ADJUST AND TEST CLUTCHES

Shift the main shift lever into gear (no need to use the clutch pedal, the clutches are all dumped), then use the shuttle dump button or the clutch pedal, shift the shuttle lever into gear, Release the hand brake and **SLOWLY** release the clutch pedal until the tractor "moves" (approx 20 % of pedal travel).

Observe whether the tractor nudges at the beginning of clutch engagement. If there is no nudge, the quickfill duration should be increased until there is a slight nudge.

If the nudge is more of a jerk, the quick fill duration should be decreased.

The factory setting is 3.

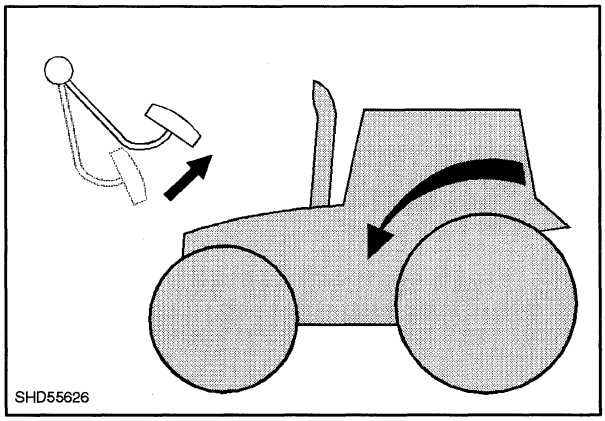

177

To adjust the quickfill duration, depress the clutch pedal or shift the shuttle lever to neutral (but leave the main shift lever in gear), then use the upshift and downshift switches to increase or decrease the number on the display.

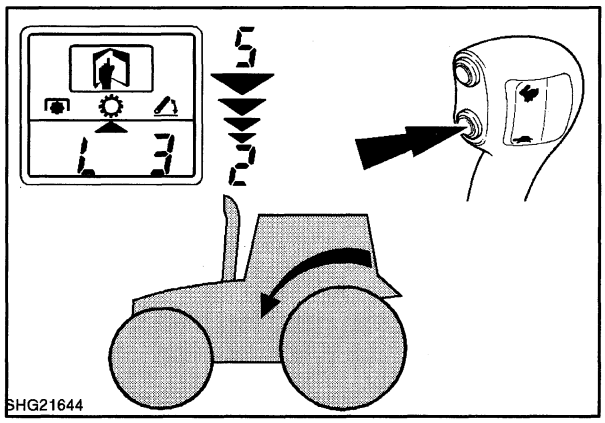

178

ERROR CODES

The transmission / EDC processor is able to create and store up to 30 error codes with the hours at which they occured and with the number of incidences that a particular error code has occured. Only error codes that prevent the tractor from driving will be displayed to the operator, other non disabling errors will be retreivable by a technician through the H menu mode of the tractor diagnostics.

It should be noted that the hours displayed is not related directly to the hour meter. For example if the occurence hours shows '10' this indicates that the error occured 10 hours ago, not at 10 hours of operation.

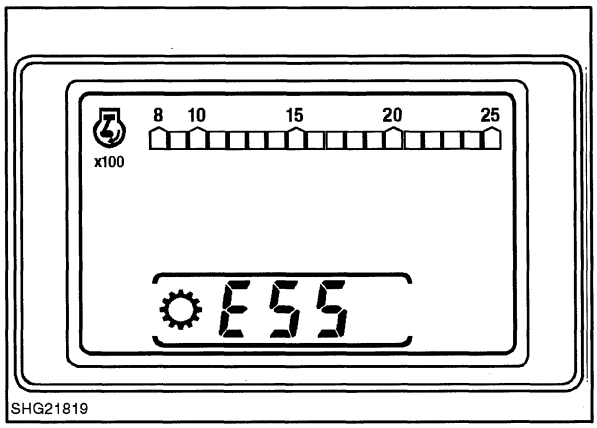

179

The following 'H' menu mode routines are provided to allow access to Error codes:

Hb - Retrieve error codes for viewing.

Hc - Clear processor memory of stored error codes

Hd - View error codes live. This allows normal operation of the tractor with error codes able to display as they occur.

A full description of the 'H' menu routines can be found in Section 55.

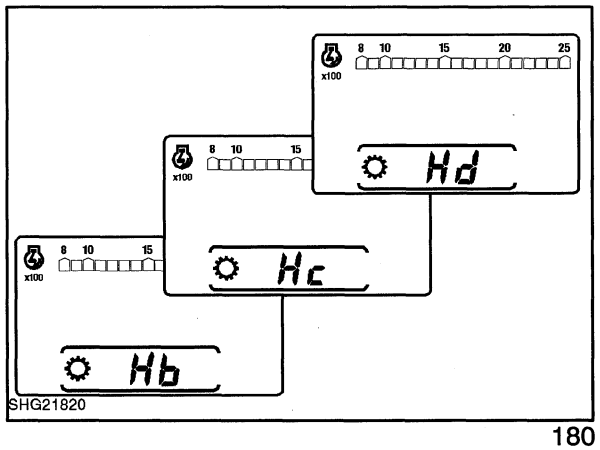

180

It should also be noted that after installation of a new processor or after a non volatile memory reset operation ('H' menu mode, H8), that the processor defaults to a 'display all codes' mode for 6 minutes. If no error codes occur during this 6 minute period the processor then reverts to normal operation. If an error occurs during this period the processor will continue to display 'live' error codes until all the errors are removed.

12x12 Dual Command Transmission Error Codes

Error	Fault Condition	Priority	Enabled/ Disable?	Error Displayed?
E21	Chassis harness disconnected	1	Disable	Yes
E36	Dump solenoid open circuit	2	Disable	Yes
E35	Dump solenoid closed circuit	3	Disable	Yes
E53	5 Volt Reference failed, shorted to 12 volts	4	Disable	Yes
E54	5 Volt Reference failed, shorted to ground	5	Disable	Yes
E12	Clutch pedal potentiometer signal too high	6	Disable	Yes
E11	Clutch pedal potentiometer signal too low	7	Disable	Yes
E39	Hi (C2) clutch solenoid open circuit	8	Disable	Yes
E38	Hi (C2) clutch solenoid short circuit	9	Disable	Yes
E41	Lo (C1) clutch solenoid open circuit	10	Disable	Yes
E40	Lo (C1) clutch solenoid short circuit	11	Disable	Yes
E37	Clutch disconnect switch open circuit	12	Disable	Yes
E48	Clutch disconnect switch short circuit misadjusted, always closed	13	Disable	Yes
CP	Depress clutch pedal to enable transmission	14	Recover	Yes
N	Clutchless shuttle operation attempted at too high a speed and in too high a gear	15	Enabled	Yes
E46	Fuse 12 blown	16	Enabled	No
E47	Clutch disconnect switch misadjusted high	17	Enabled	No
E51	Transmission temperature sensor open circuit	18	Enabled	No
E52	Transmission temperature sensor short circuit	19	Enabled	No
E24	Both clutches not calibrated	20	Enabled	No
EHi	Hi (C2) clutch not calibrated	21	Enabled	No
ELo	Lo (C1) clutch not calibrated	22	Enabled	No
E55	No output speed signal	23	Enabled	No
E56	Differential lock switch error	24	Enabled	No
E49	Wheel speed sensor circuit open or short circuit	25	Enabled	No
E26	Engine rev/min speed too high	26	Enabled	No
E27	Engine rev/min speed too low	27	Enabled	No

Key to Fault Finding Diagrams
Diagrams 1 to 6 - Not related to error codes

1. Tractor Does Not Drive In Any Gear
2. Poor Clutch Feathering
3. Clutch Potentiometer Calibration Check
4. Holding in Gear / Jumping Out of Gear / Clashing
5. Transmission is Noisy in Operation
6. Transmission 'Clunks' During Inching

Diagrams 7 onwards, error code related:

7. Error Codes E35 and E36
8. Error Code E11
9. Error Code E12
10. Error Codes E53 and E54
11. Error Codes E37, E47 and E48
12. Error Codes E38,E39 and E40,E41
13. Error Code CP
14. Error Code E46
15. Error Codes E51 and E52
16. Error Codes E24, EHi and ELo
17. Error Code E55
18. Error Code E56
19. Error Code E49
20. Error Code E26
21. Error Code E27
22. Error Code N

DIAGRAM 1 - Tractor does not drive (in any gear)

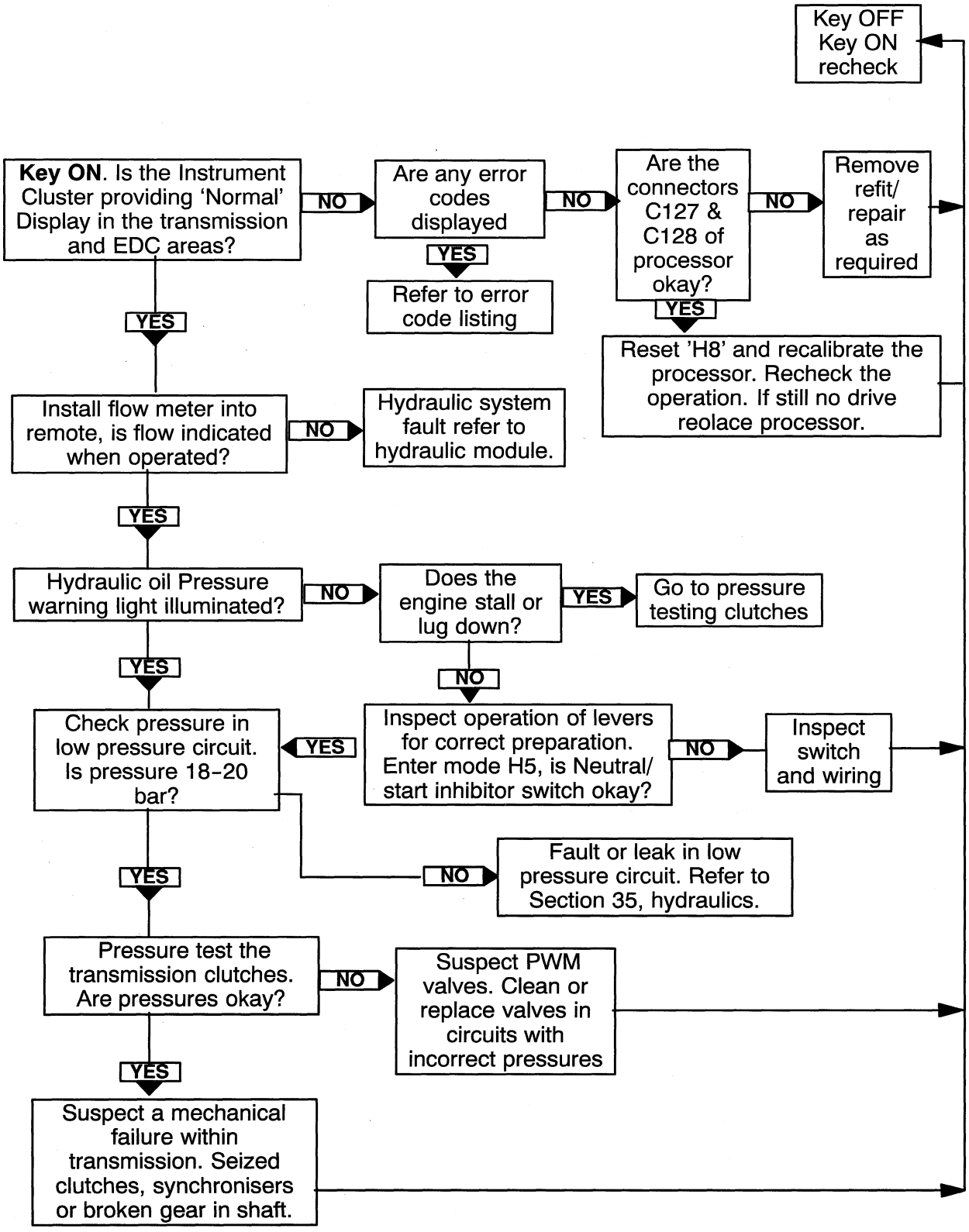

DIAGRAM 2 - The tractor drives in all gears but has the following fault
Poor clutch pedal feathering/inching performance.

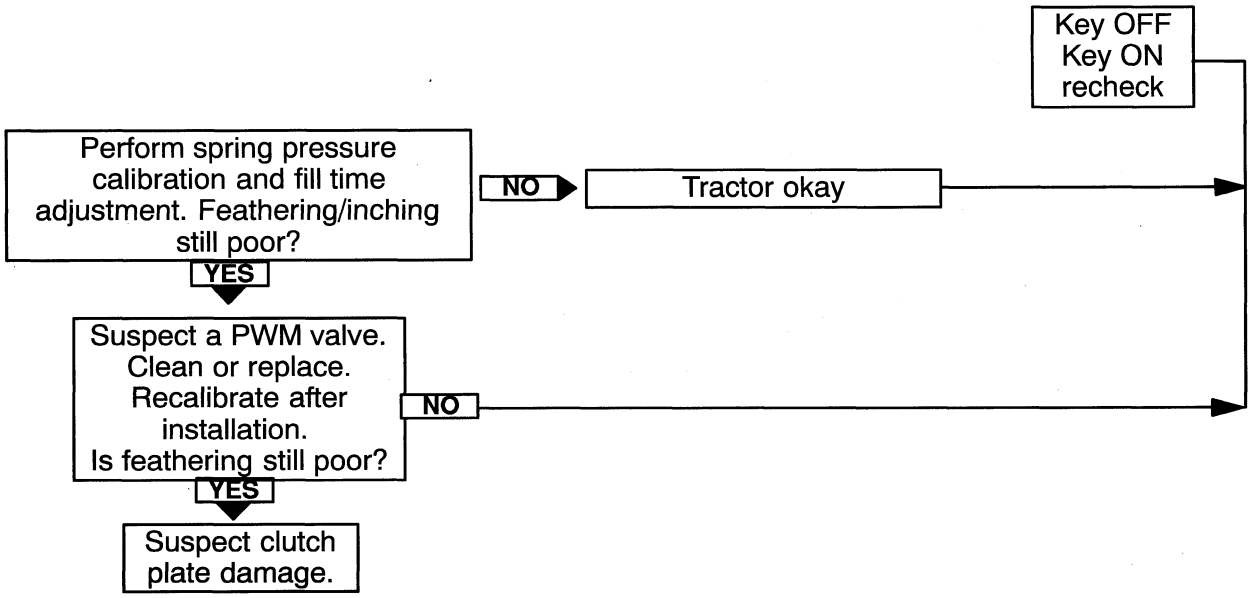

DIAGRAM 3 - Clutch pedal potentiometer calibration check

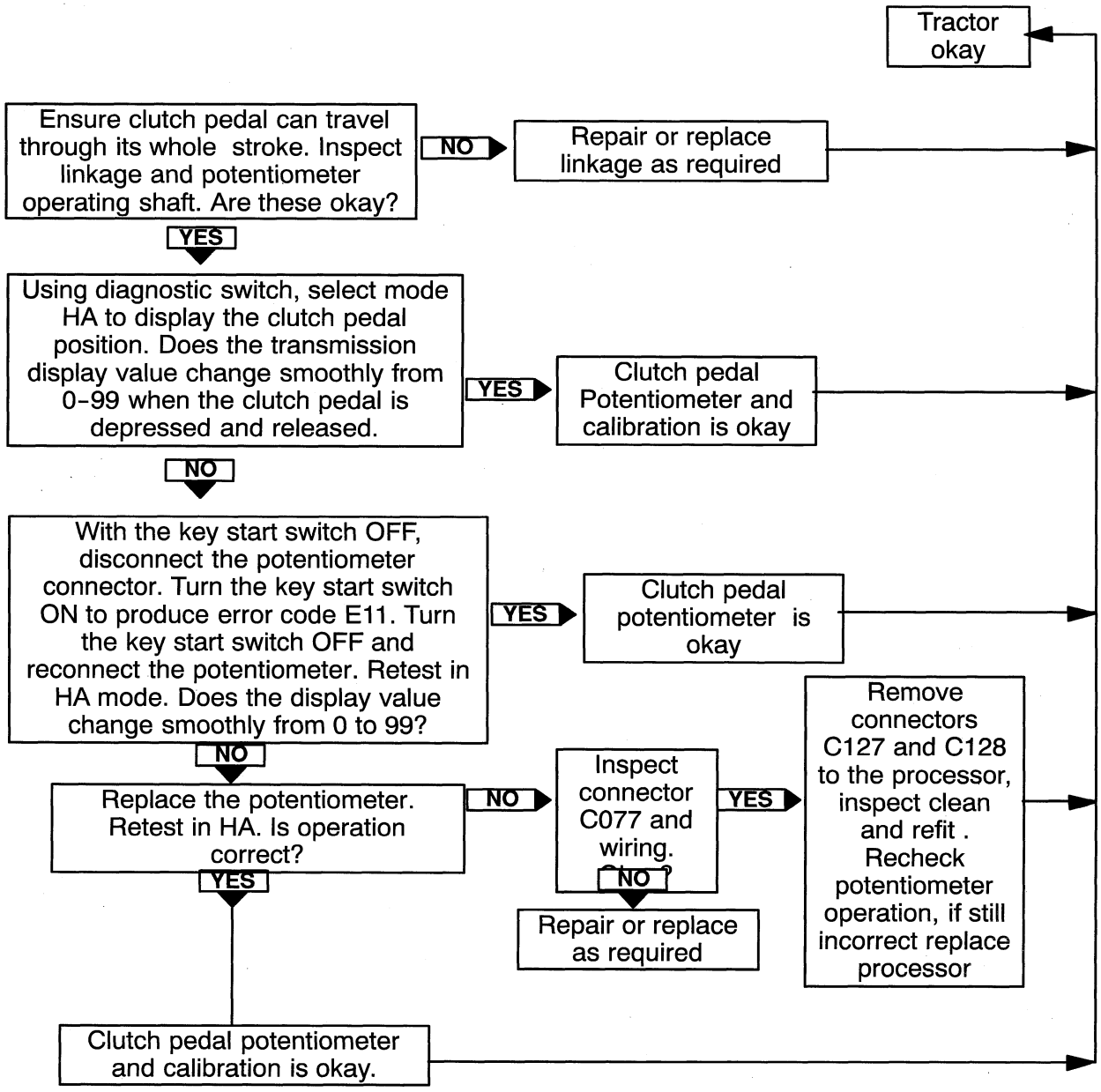

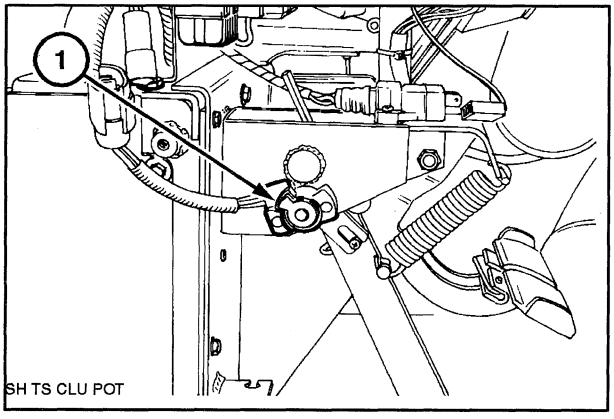

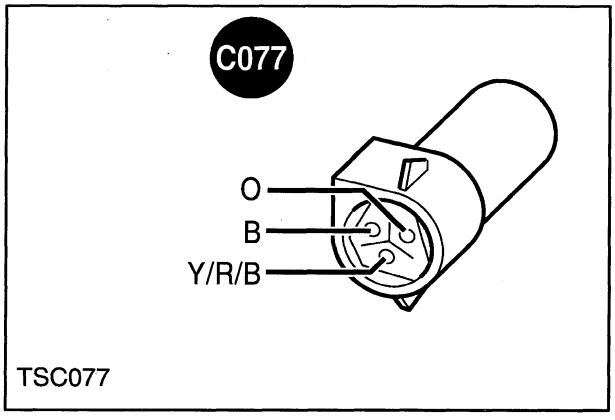

DIAGRAM 4: The tractor drives in all gears and ranges but has the following fault: Transmission jumps out of gear, holds in gear or gears clash when shifting

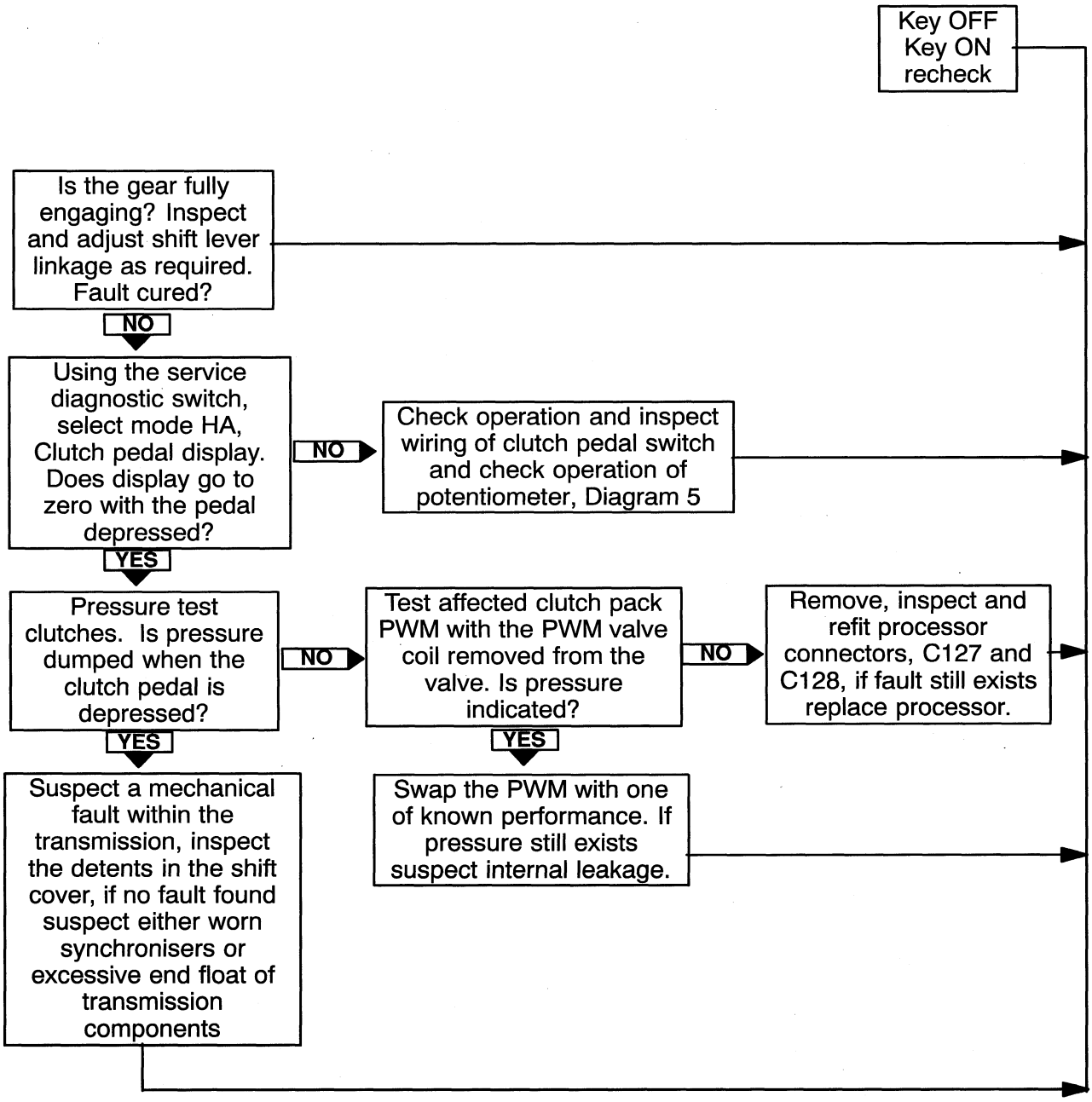

DIAGRAM 5: The tractor drives in all gears and in all ranges but has the following fault:

Transmission is noisy in operation

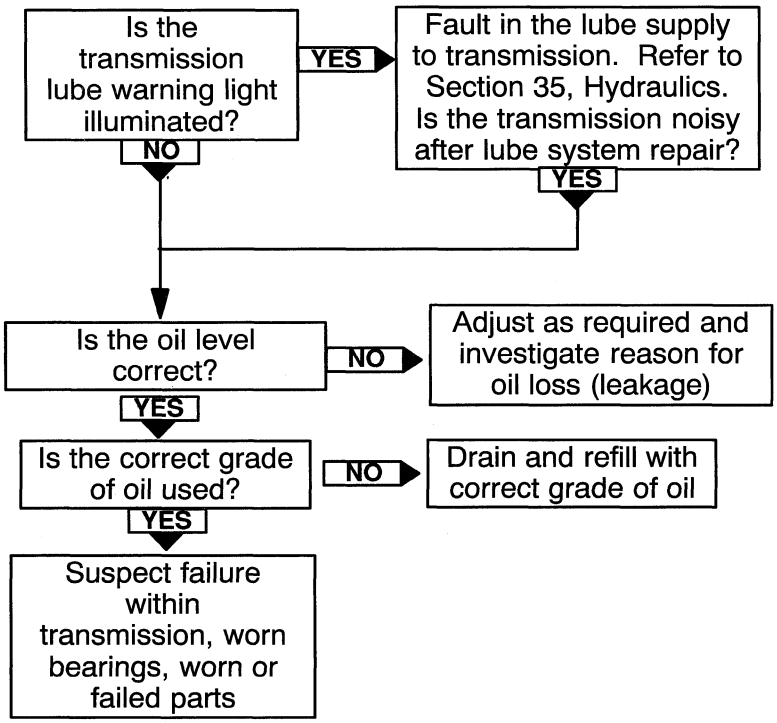

DIAGRAM 6: The tractor drives in all gears and ranges but has the following fault:

Transmission clunks during inching

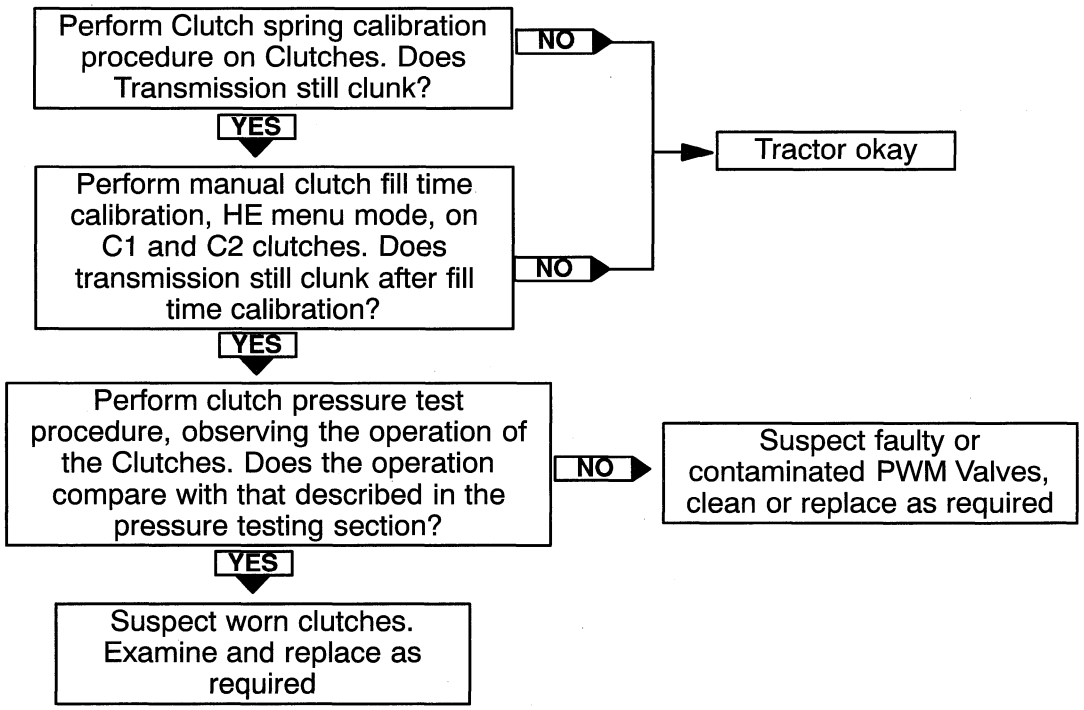

Diaram 7 **Error Code E35 displayed - Dump Solenoid Closed Circuit**
Error Code E36 displayed - Dump Solenoid Open Circuit

Error codes E35 and E36 indicate either a short or open circuit in the wiring of the dump solenoid. Inspect the connector of the dump solenoid and ensure it is in good condition and correctly installed. If the fault persists use a suitable multi-meter to check the wiring from the solenoid back to the processor module. Locate the short/open circuit and repair or replace wiring as necessary.

If wiring is okay, disconnect the dump solenoid from the harness and check that the resistance of the coil is approximately 10 ohms at 20°C. If not, replace the solenoid.

If wiring and solenoid are okay, remove, inspect and refit the processor connectors, C127 and C128, if the error continues to occur replace the microprocessor with one of known performance.

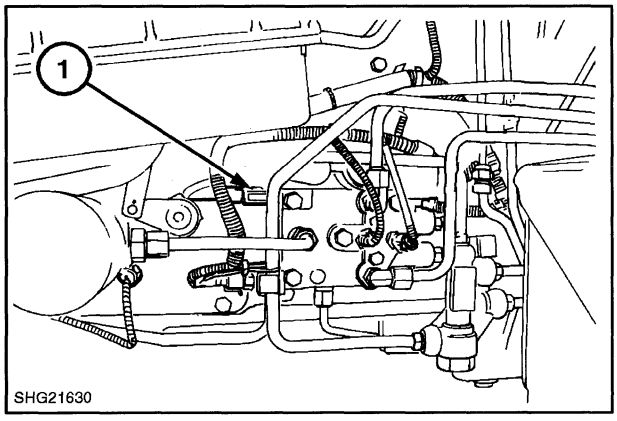

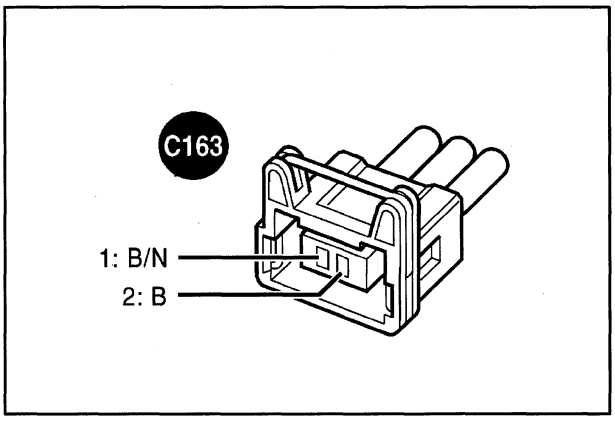

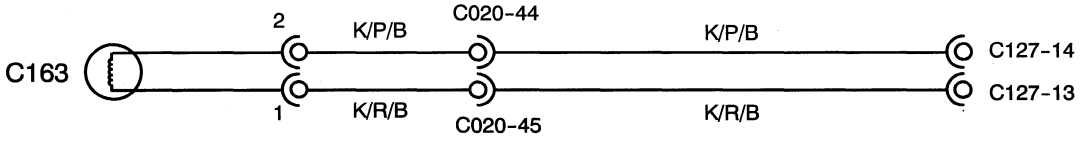

DIAGRAM 8 - Error Code E11

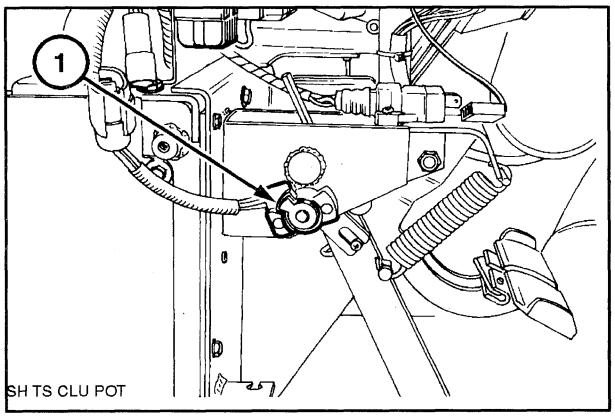

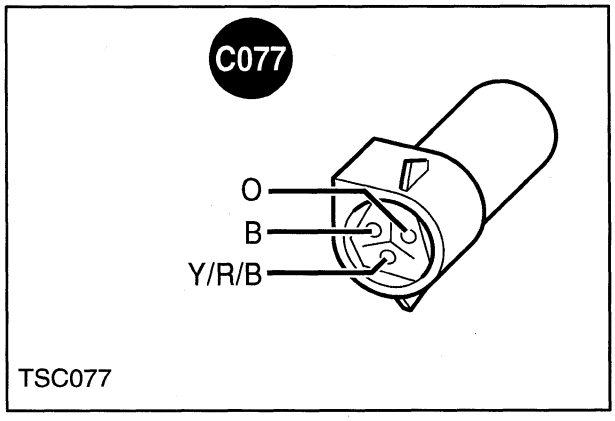

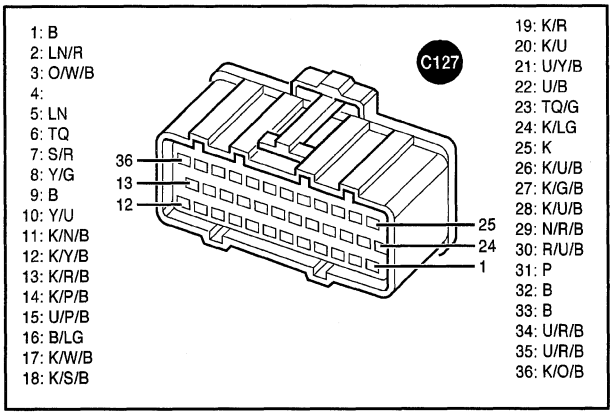

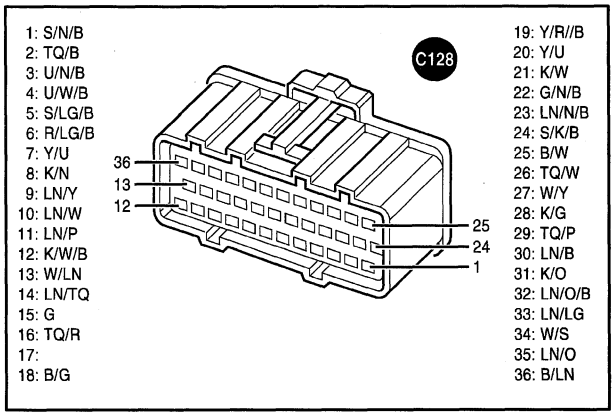

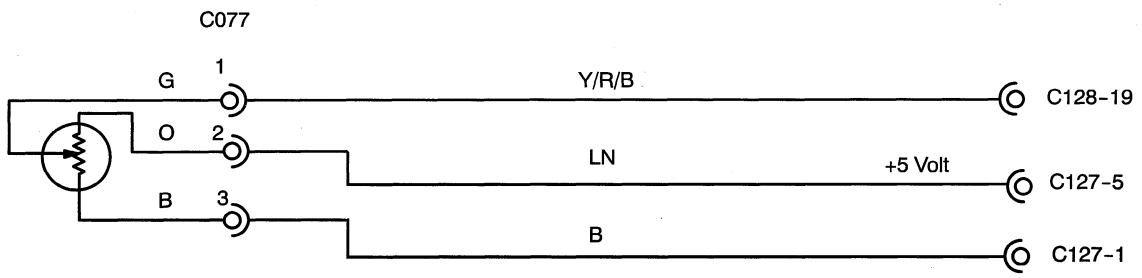

DIAGRAM 8 - Error Code E11 - Clutch potentiometer voltage below valid range

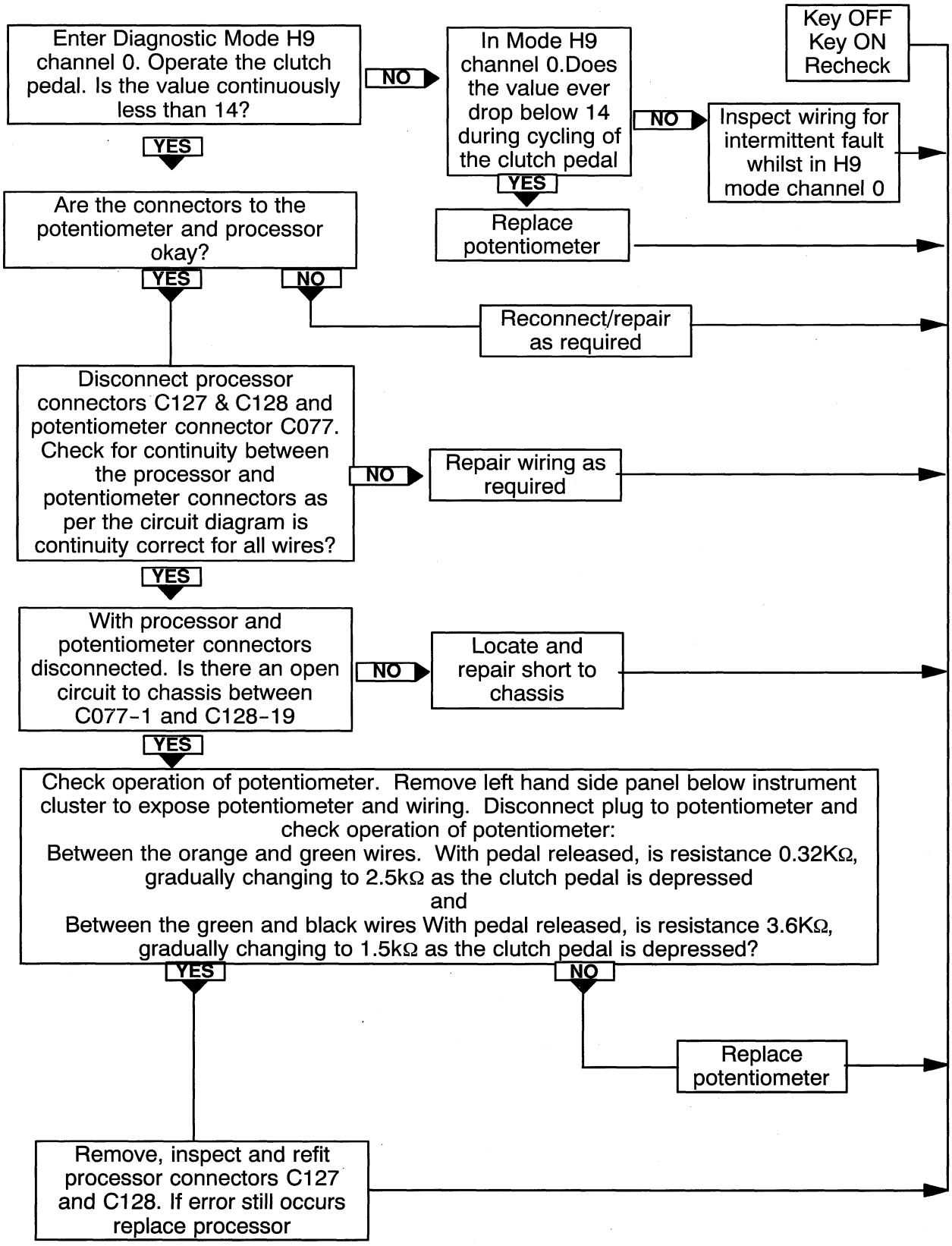

DIAGRAM 9 - Error Code E12

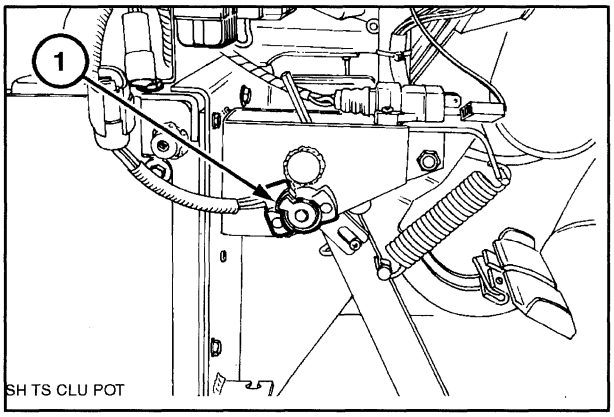

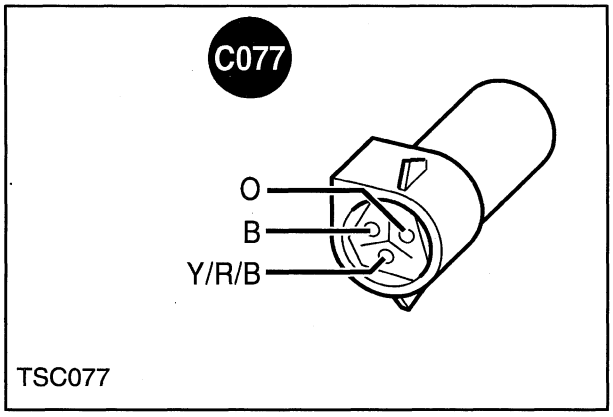

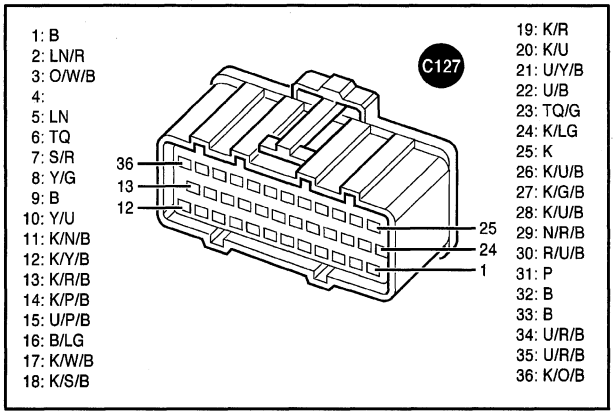

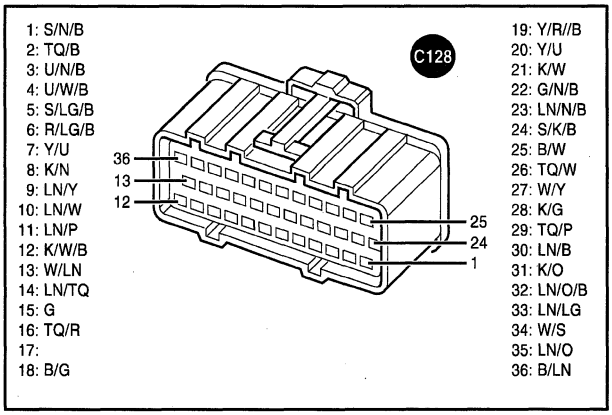

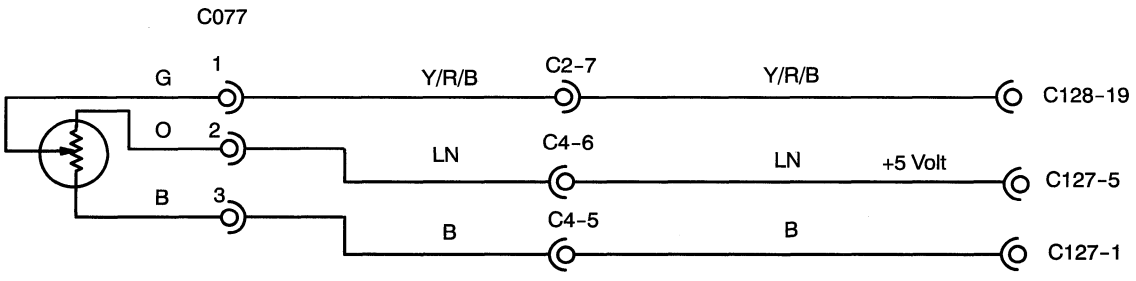

DIAGRAM 9 - Error Code E12 - Clutch potentiometer voltage above valid range

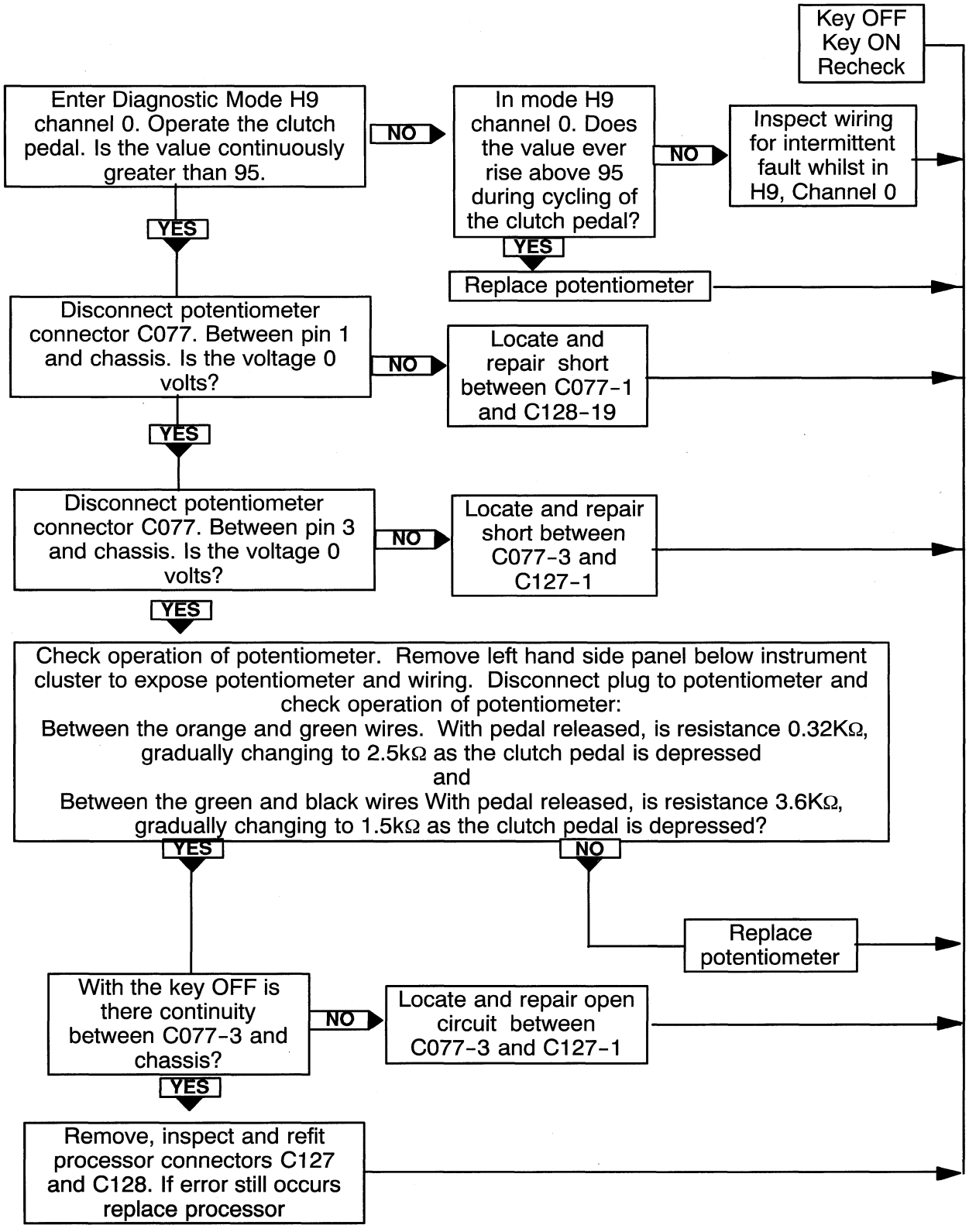

DIAGRAM 10 - Error code E53 - 5 volt reference failed, shorted to battery voltage
Error code E54 - 5 volt reference failed, shorted to earth.

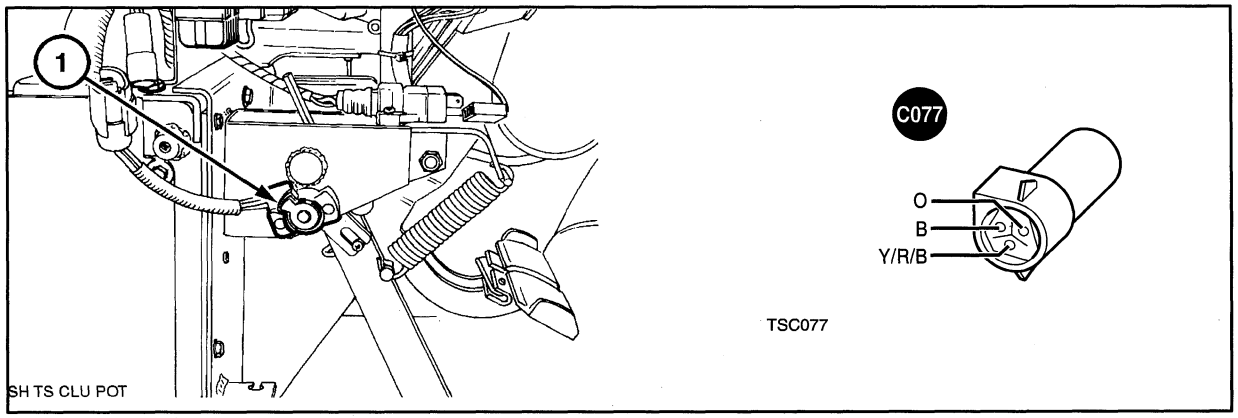

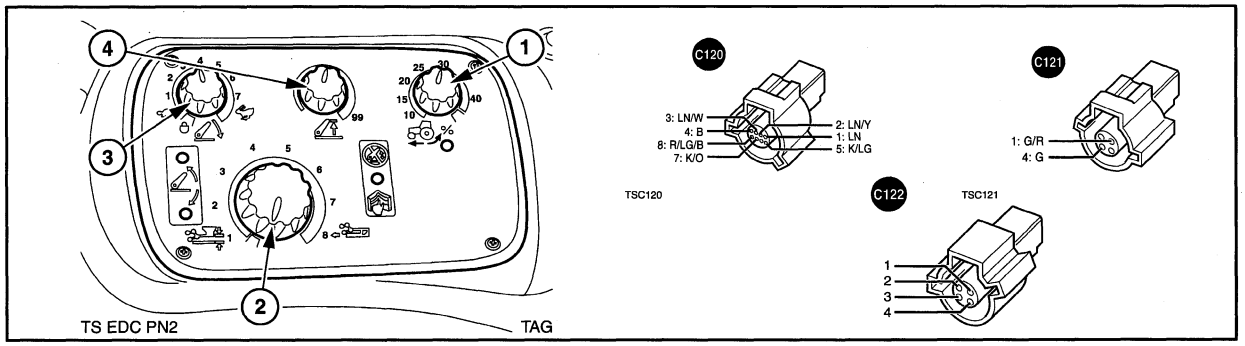

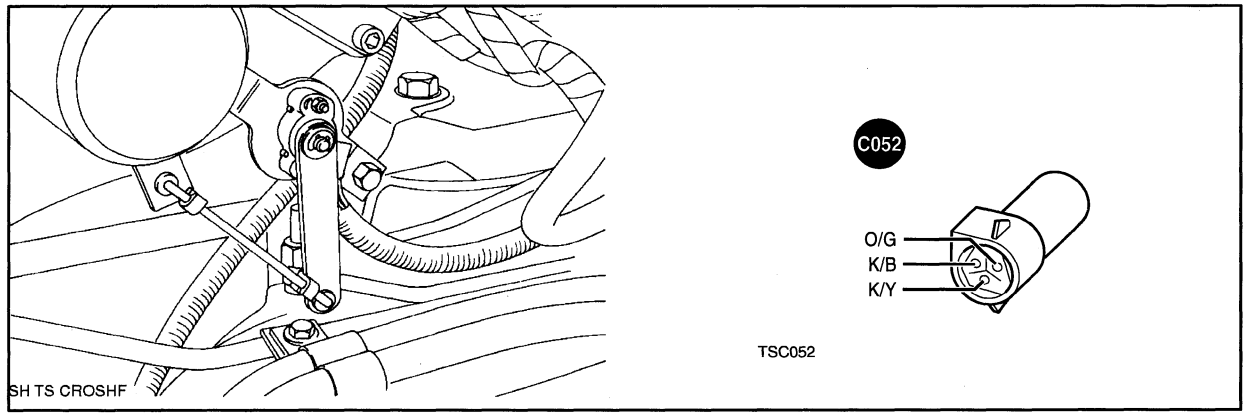

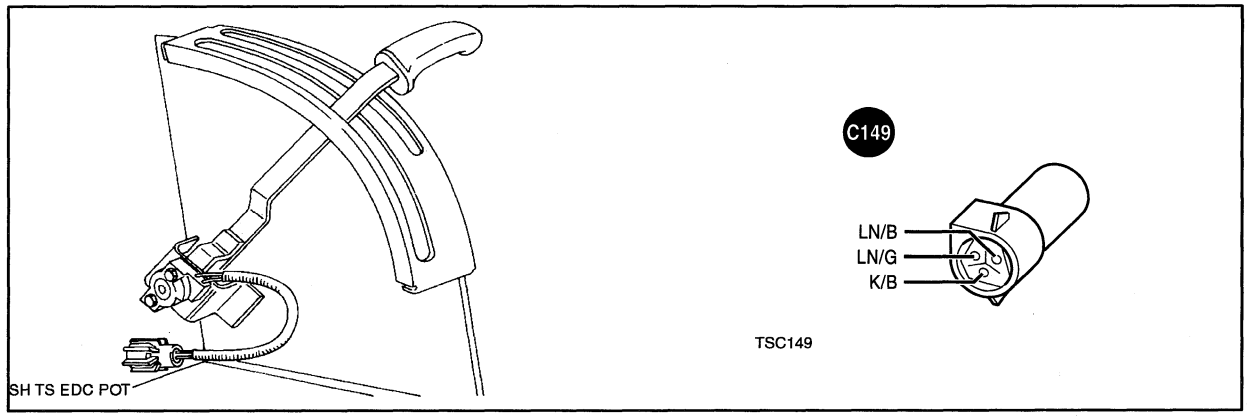

DIAGRAM 10 - Error code E53 - 5 volt reference failed, shorted to battery voltage
Error code E54 - 5 volt reference failed, shorted to earth.

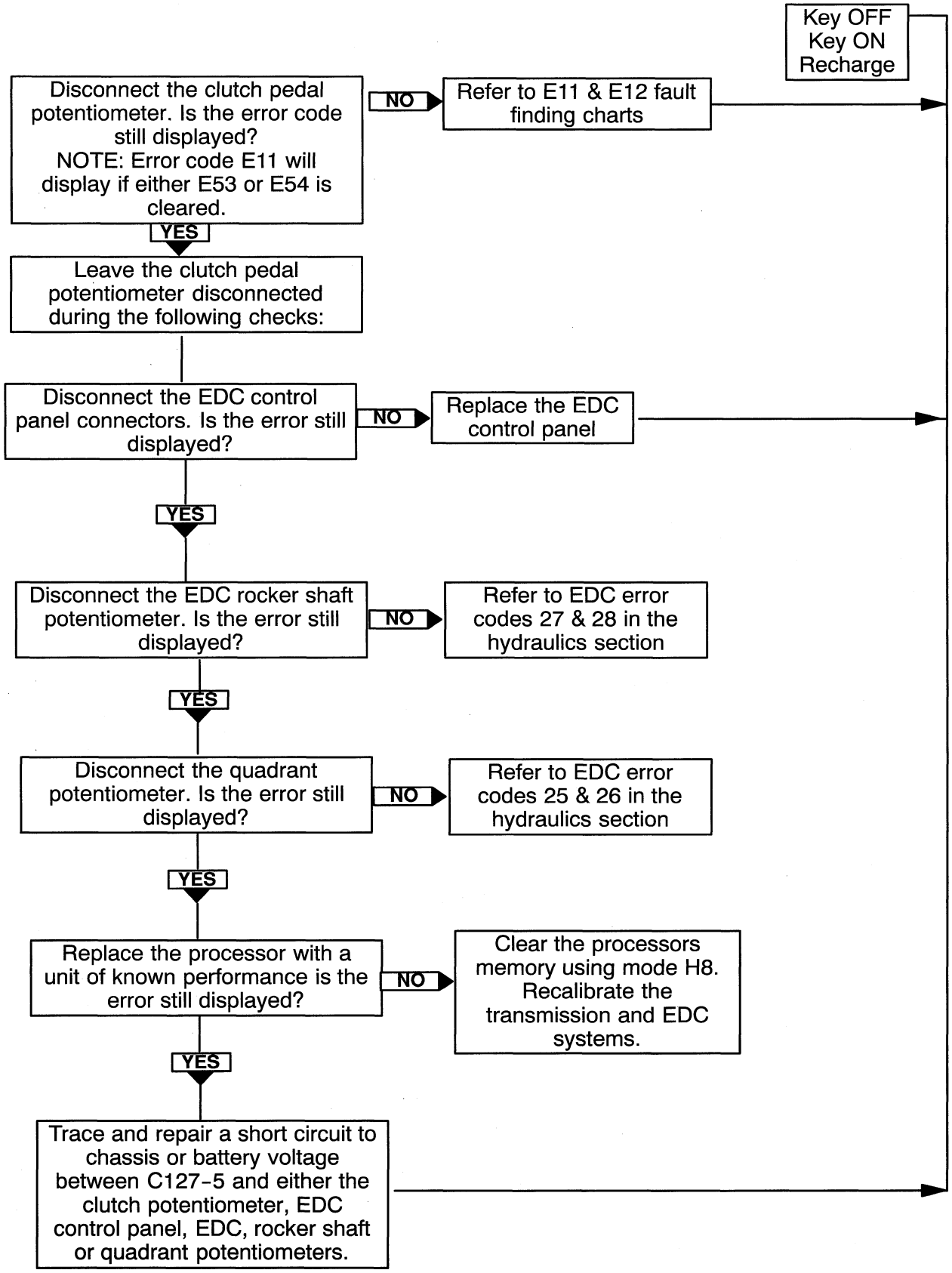

DIAGRAM 11 - Error Codes E37, E48 and E47

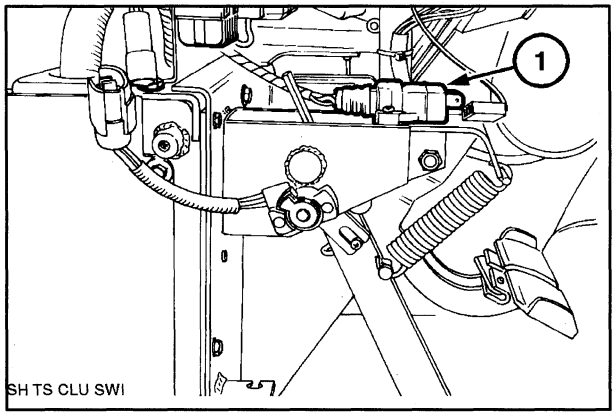

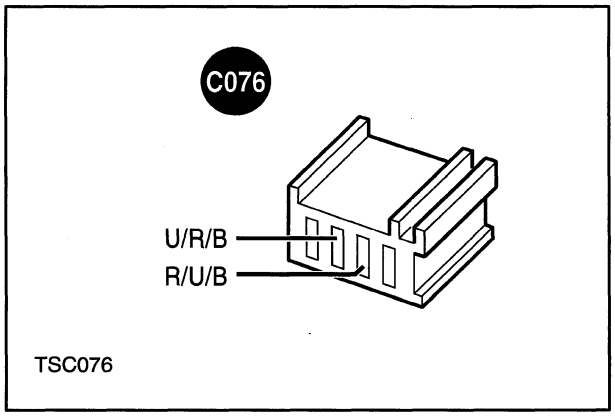

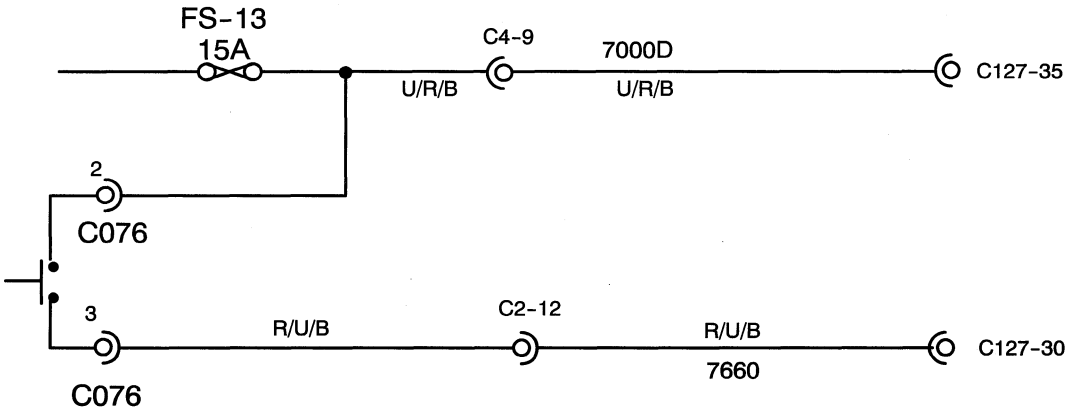

DIAGRAM 11 -

Error Code E37 displayed - Clutch disconnect switch open circuit

Check switch adjustment and switch operation, if okay trace break in wiring (open circuit).

Error Code E48 displayed - Clutch disconnect switch short circuit

Check switch adjustment and switch operation, if okay trace short circuit in wiring.

Error Code E47 displayed - Clutch disconnect maladjusted high

Check switch adjustment and operation of switch.

NOTE: *With each of these error codes also check that the clutch potentiometer operates over the full range using Service mode HA. If the range is not 0-99 then refer to 'Clutch Potentiometer calibration' Diagram 5.*

DIAGRAM 12 - PWM Solenoids

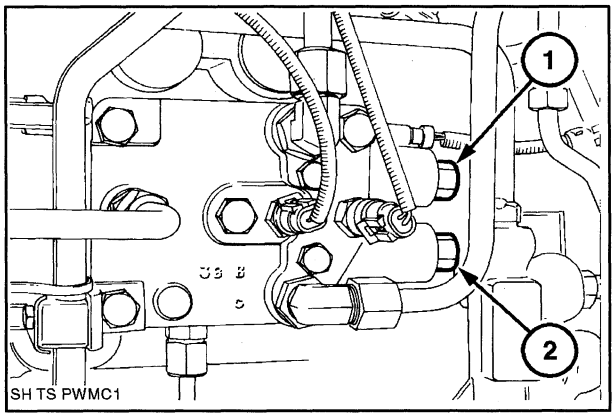

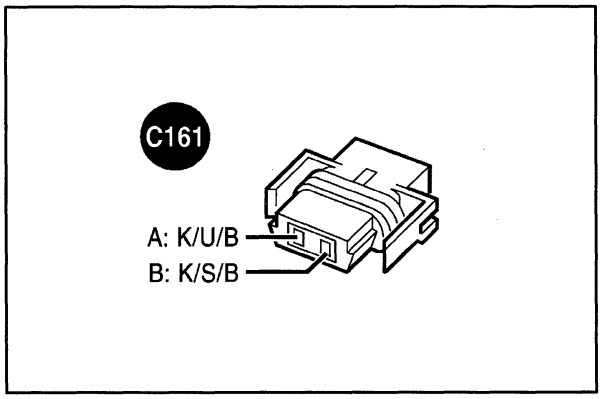

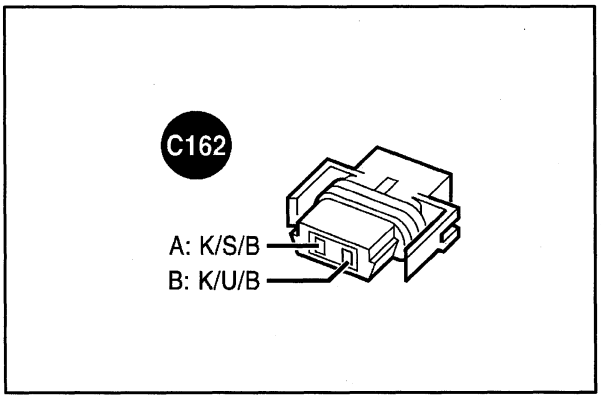

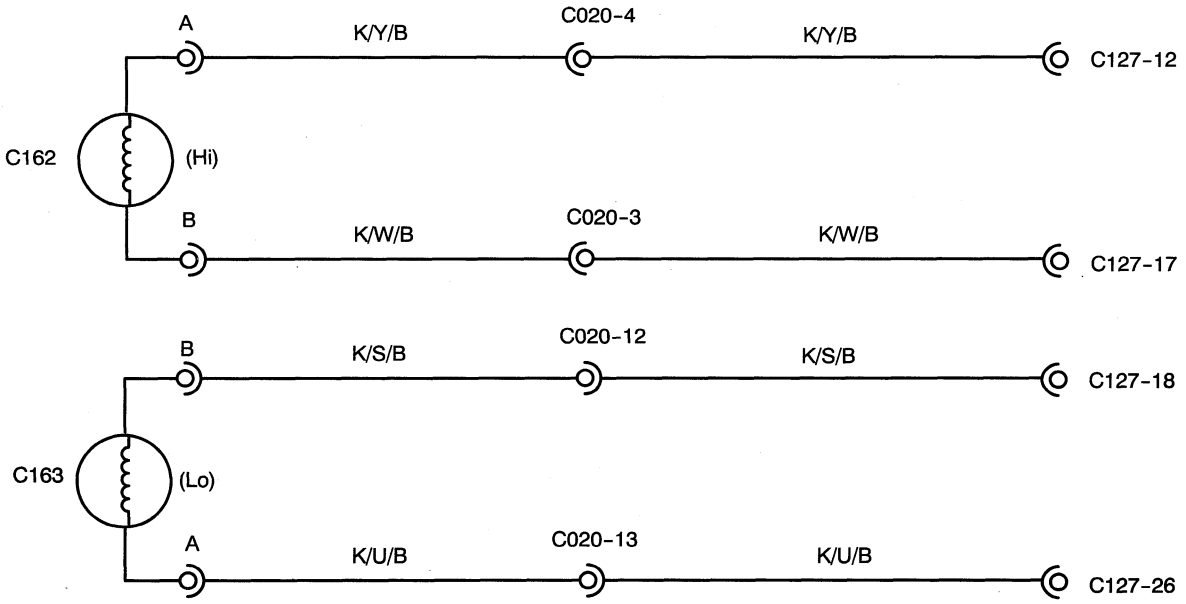

DIAGRAM 12 - PWM Solenoids

Error Code E38 displayed - C2 (C162) PWM solenoid wiring short circuit
Error Code E39 displayed - C2 (C162) PWM solenoid wiring open circuit
Error Code E40 displayed - C1 (C161) PWM solenoid wiring short circuit
Error Code E41 displayed - C1 (C161) PWM solenoid wiring open circuit

Error codes E38 through to E41 indicate either a short or open circuit in the wiring of one of the PWM solenoids. Inspect the connector of the solenoid and ensure it is in good condition and correctly installed. If the fault persists use a suitable multi-meter to check the wiring from the PWM solenoid back to the processor module. Locate the short/open circuit and repair or replace wiring as necessary.

▼

If wiring is okay, disconnect the PWM solenoid from the harness and check that the resistance of the PWM coil is approximately 10 ohms at 20°C. If not, replace the PWM solenoid.

▼

If wiring and PWM solenoids are okay, remove, inspect and refit the processor connectors, C127 and C128, if the error continues to occur replace the microprocessor with one of known performance.

DIAGRAM 13 - Error code CP displayed - depress clutch pedal to re-enable transmission

C127

1: B
2: LN/R
3: O/W/B
4:
5: LN
6: TQ
7: S/R
8: Y/G
9: B
10: Y/U
11: K/N/B
12: K/Y/B
13: K/R/B
14: K/P/B
15: U/P/B
16: B/LG
17: K/W/B
18: K/S/B

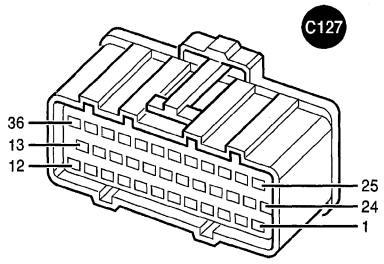

19: K/R
20: K/U
21: U/Y/B
22: U/B
23: TQ/G
24: K/LG
25: K
26: K/U/B
27: K/G/B
28: K/U/B
29: N/R/B
30: R/U/B
31: P
32: B
33: B
34: U/R/B
35: U/R/B
36: K/O/B

C128

1: S/N/B
2: TQ/B
3: U/N/B
4: U/W/B
5: S/LG/B
6: R/LG/B
7: Y/U
8: K/N
9: LN/Y
10: LN/W
11: LN/P
12: K/W/B
13: W/LN
14: LN/TQ
15: G
16: TQ/R
17:
18: B/G

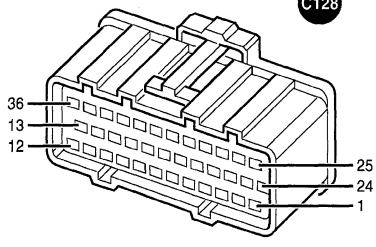

19: Y/R//B
20: Y/U
21: K/W
22: G/N/B
23: LN/N/B
24: S/K/B
25: B/W
26: TQ/W
27: W/Y
28: K/G
29: TQ/P
30: LN/B
31: K/O
32: LN/O/B
33: LN/LG
34: W/S
35: LN/O
36: B/LN

C020

1:
2:
3: K/W/B
4: K/Y/B
5: K/N/B
6: K/O/B
7:
8: U/P/B
9: K/U/B
10: K/G/B
11:
12: U/LG/B
13: Y/O
14: B/N
15: Y/B
16: B

17: K/U
18: K/R
19: O/S
20: Y/U
21:
22: B
23: LN/G
24: K/Y
25: G/B
26: R/N/B
27: B/LG
28: R/U
29: W/R
30: LN/P
31: K
32: K/N

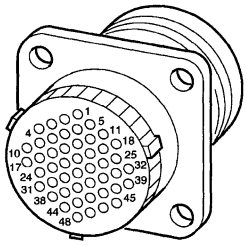

33: W/Y
34:
35: LN/LG
36: S/O/B
37: S/N/B
38: S/O/B
39: U/N/B
40: U/W/B
41: LN/O/B
42: B/G
43: TQ
44: K/P/B
45: K/R/B
46: K/S/B
47: K/U/B
48:

C001

1: U/W
2: U/R
3: N/R
4: LG/W
A: Y/S
B: B/S
C: W/N
D:
E: W/Y
F: W/S
G: G/U
H: R/K

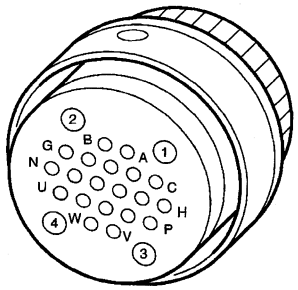

K: G
L: P/Y
M: W/Y
N:
P:
R:
S: G/K
T: R
U: R
V: P/N
W: N/Y

DIAGRAM 13 - Error code CP displayed - depress clutch pedal to re-enable transmission

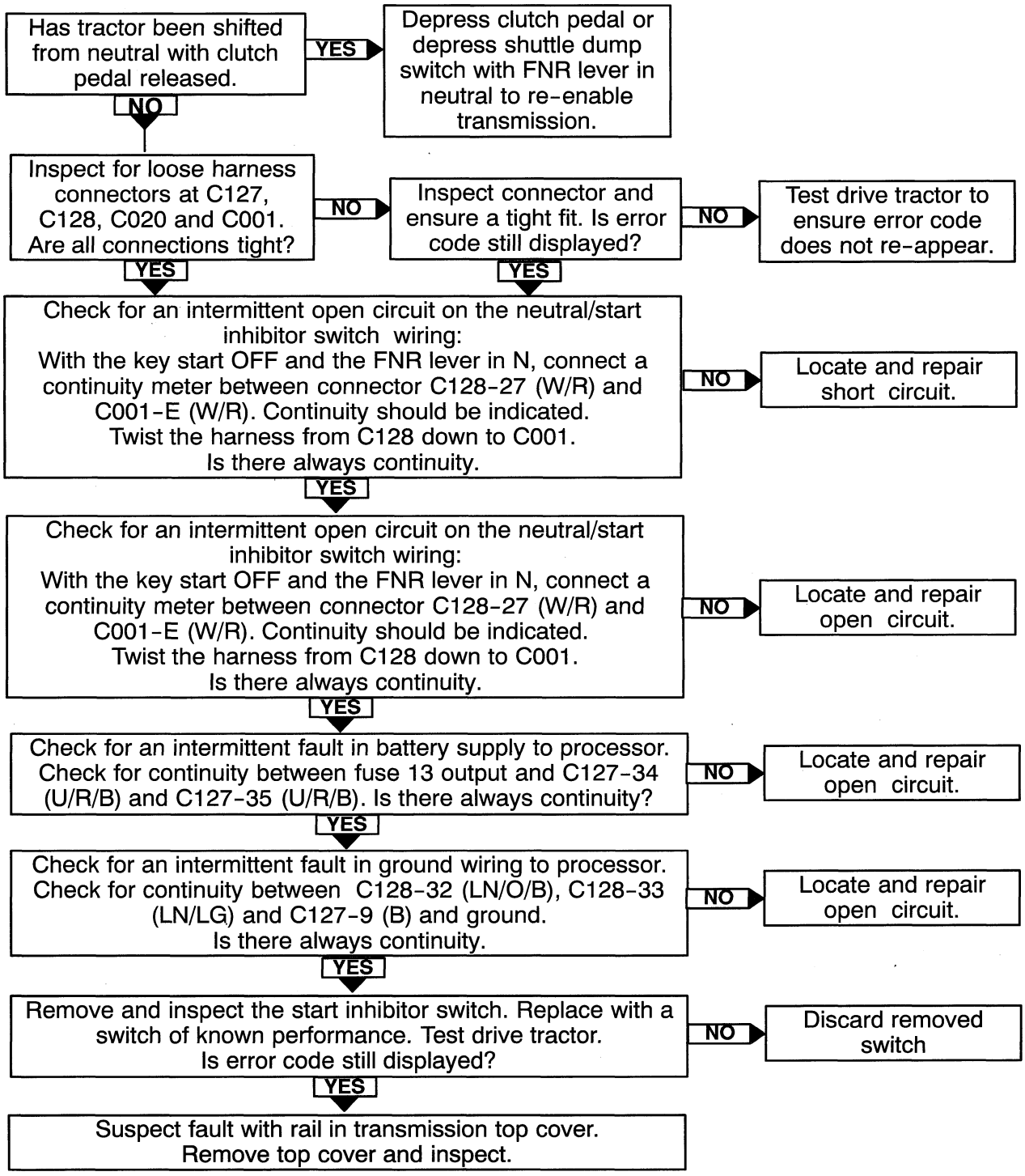

DIAGRAM 14 - Error code E46 displayed - Fuse 12 blown.

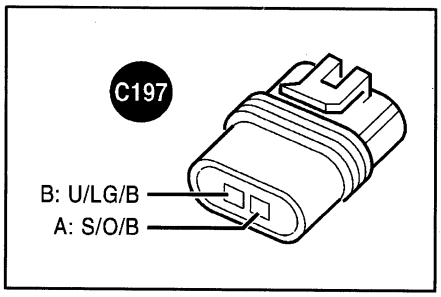

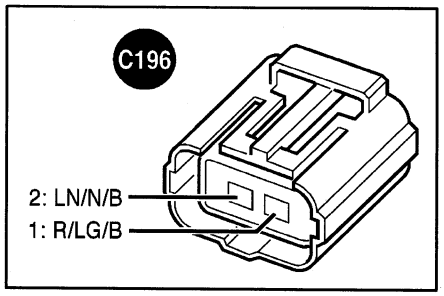

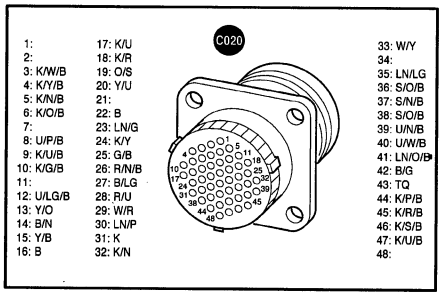

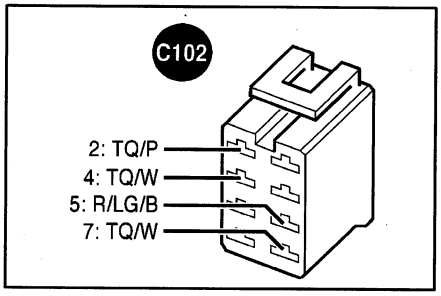

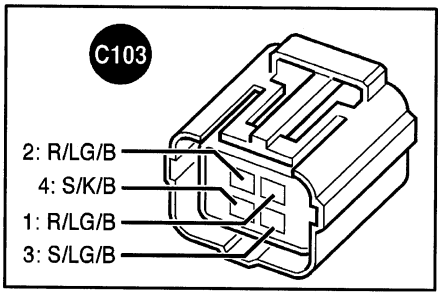

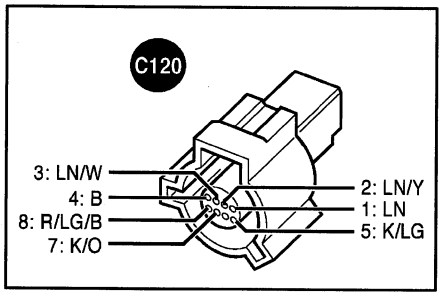

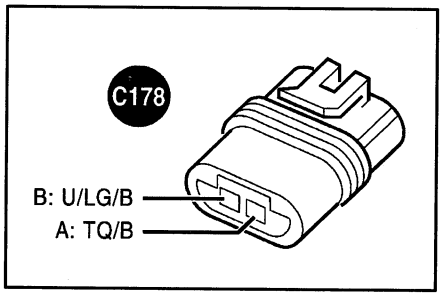

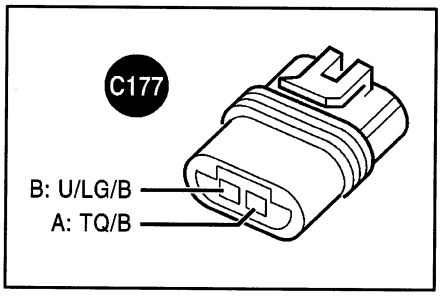

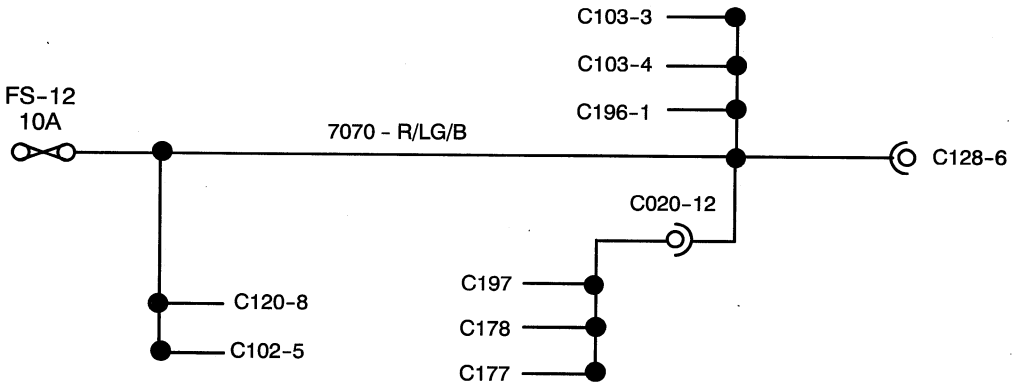

DIAGRAM 14 - Error code E46 displayed - Fuse 12 blown.

No power to switches, 1/2, 3/4. Hi/Med, shuttle dump, powershift up-down, EDC panel and raise/work/lower switch.

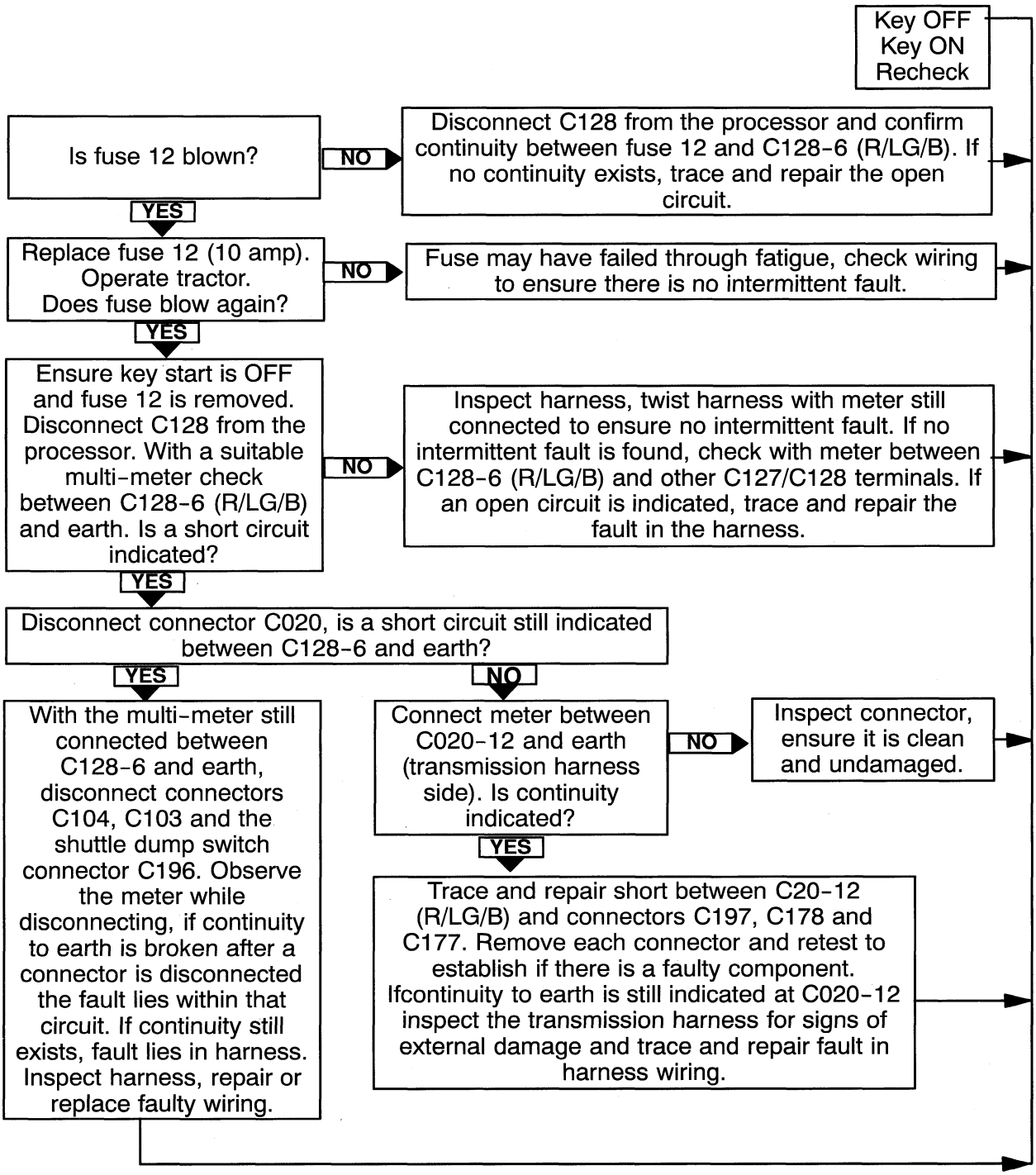

DIAGRAM 15 - Error Codes E51 or E52

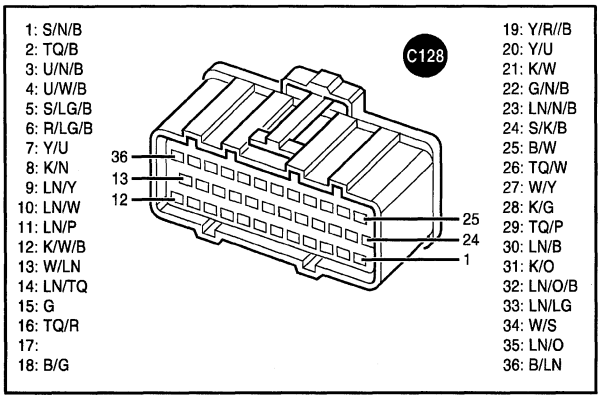

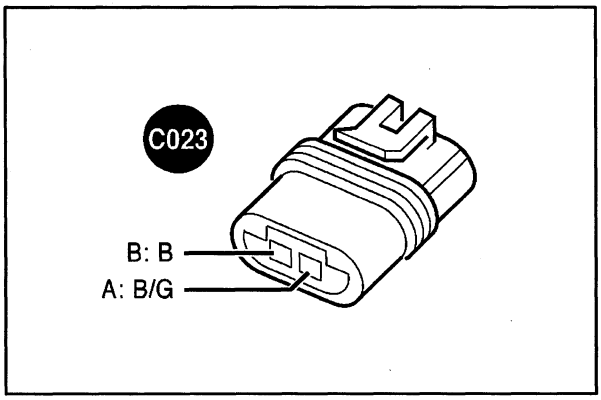

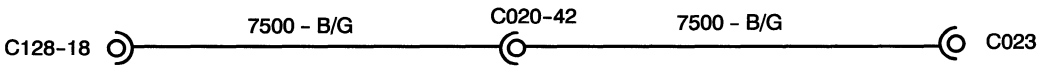

DIAGRAM 15 - Error Codes E51 or E52

Transmission oil Temperature wiring open circuit or short circuit

NOTE: E51 may be generated in extreme cold conditions, i.e, less than -30°C
E52 may be generated in extreme hot conditions, i.e, greater than 130°C

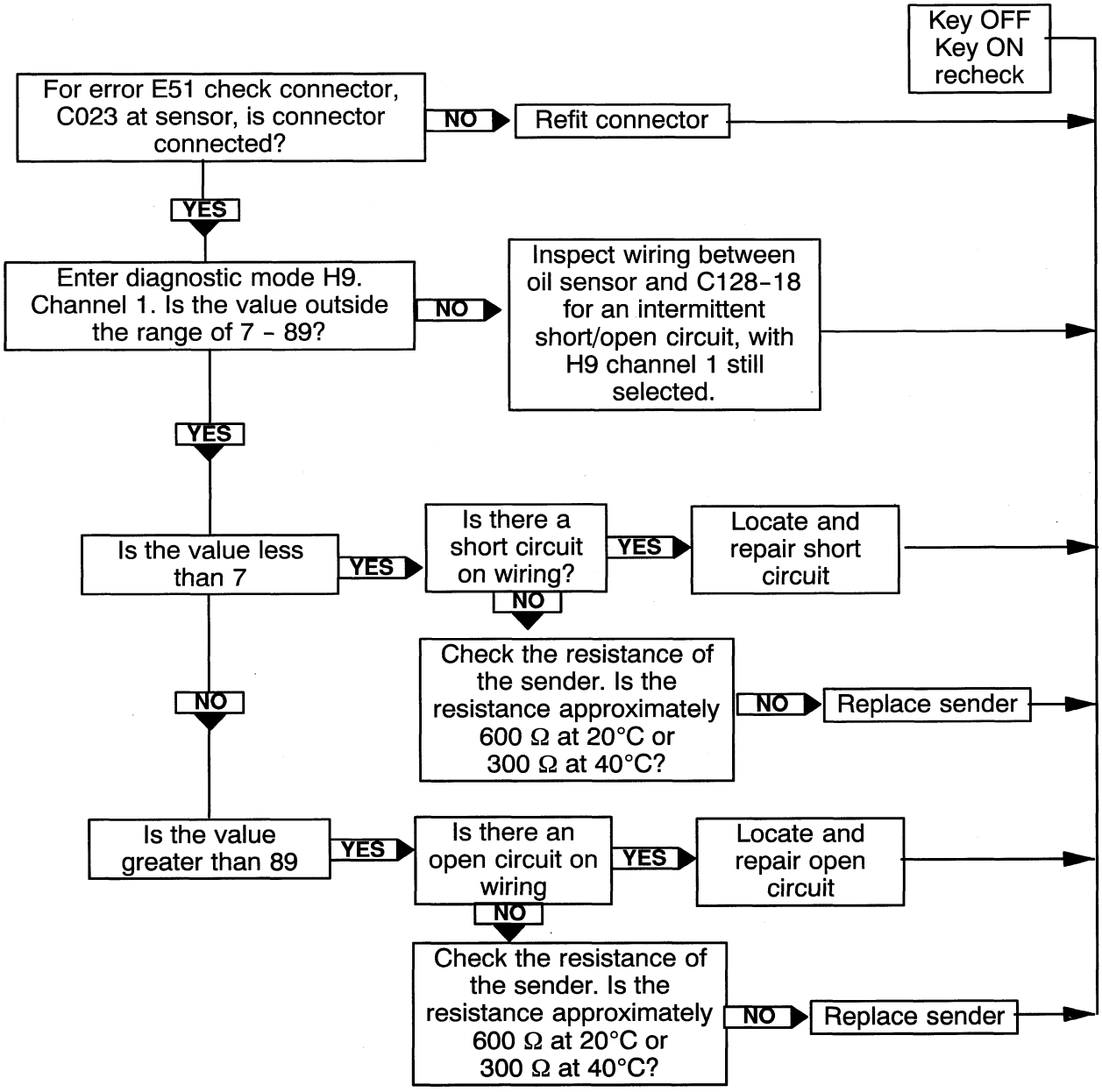

DIAGRAM 16

Error Code E24 displayed - Both Clutches Not Calibrated

Perform spring pressure calibration on both clutches

Error Code EHi displayed - Hi (C2) Clutch Not Calibrated

Perform spring pressure calibration on Hi (C2) clutch

Error Code ELo displayed - Lo (C1) Clutch Not Calibrated

Perform spring pressure calibration on Lo (C1) Clutch

Note: *These errors will only occur after installation of a new processor or after a 'H8' (clear processor memory operation)*

DIGRAM 17 - ERROR CODE E55

No Signal From Output Speed Sensor

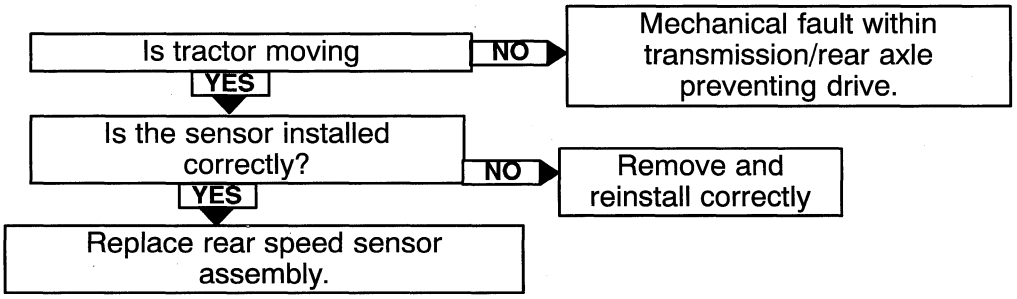

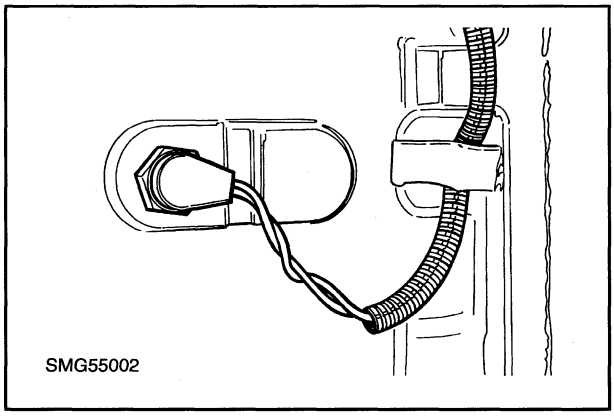

DIAGRAM 18 - E56 Differential Lock Switch Error

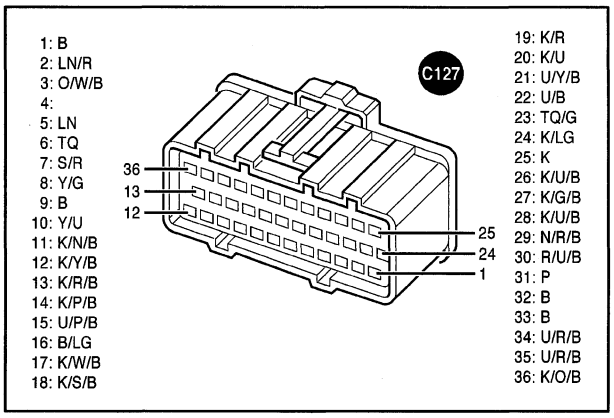

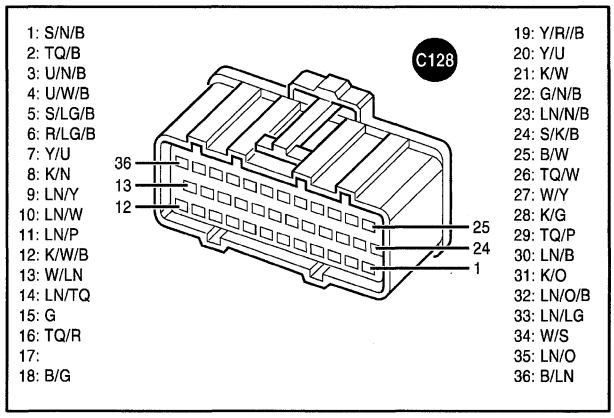

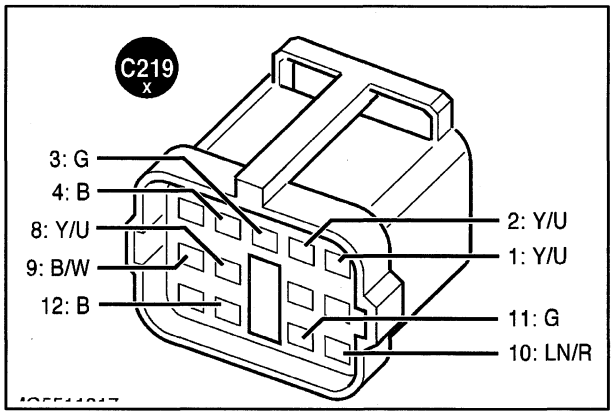

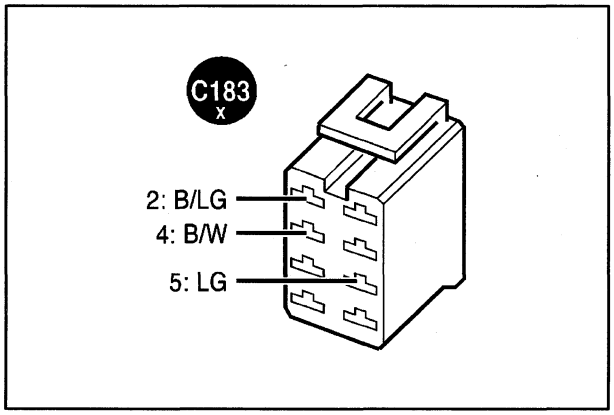

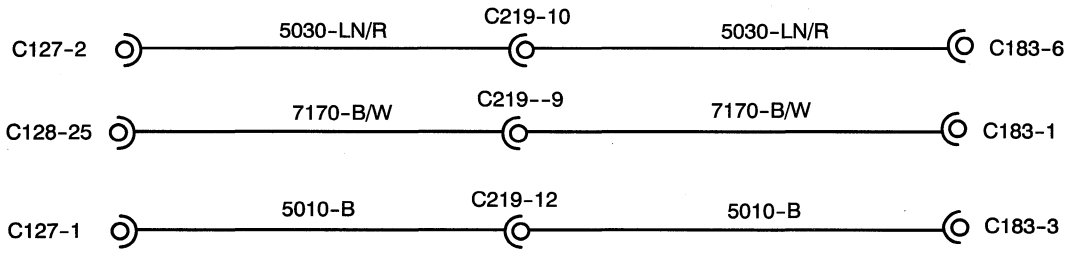

DIAGRAM 18 - E56 Differential Lock Switch Error

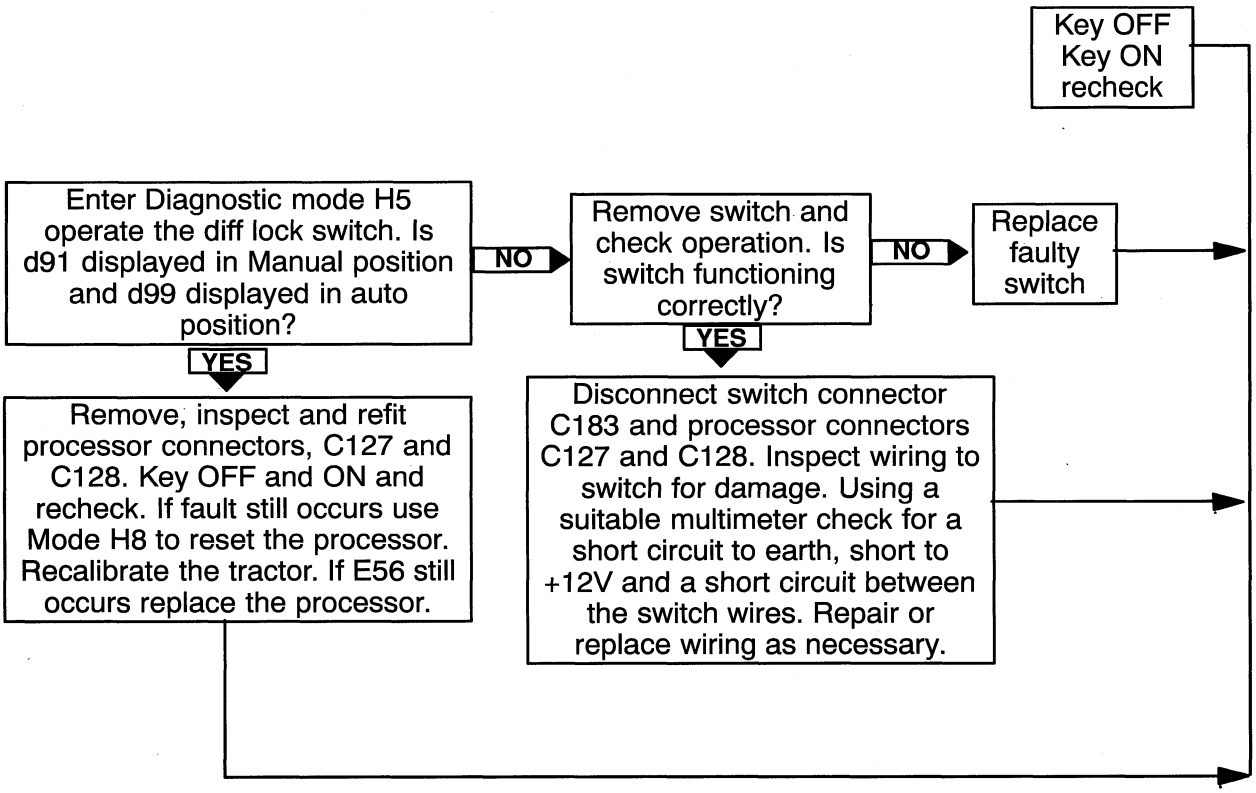

DIAGRAM 19 - Error Code E49

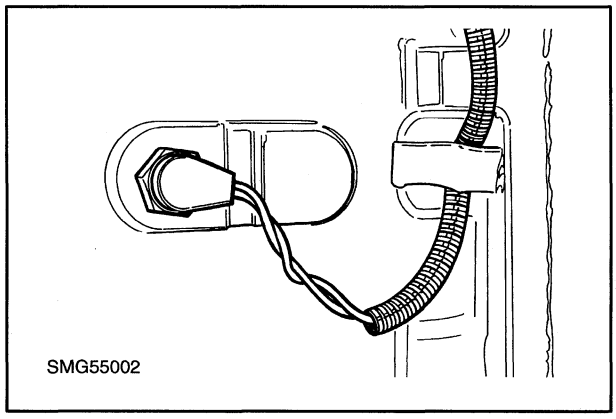

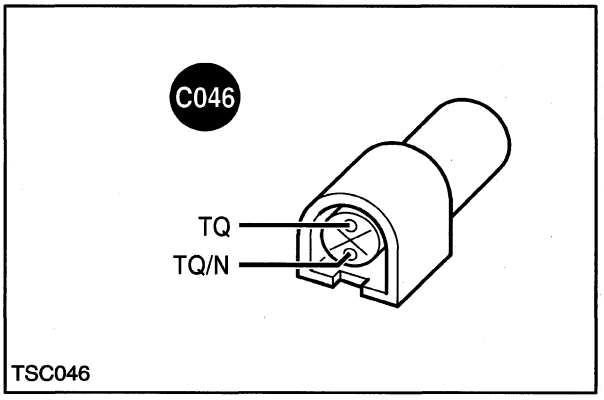

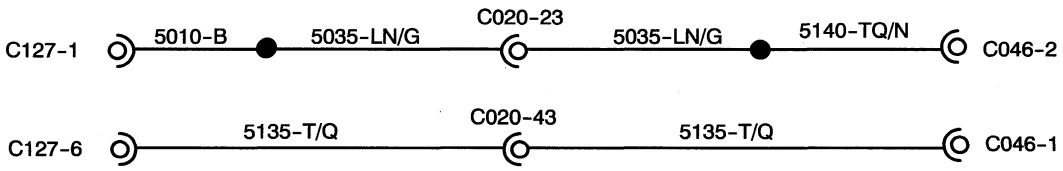

DIAGRAM 19 - Error Code E49

Wheel speed sensor open or short circuit.

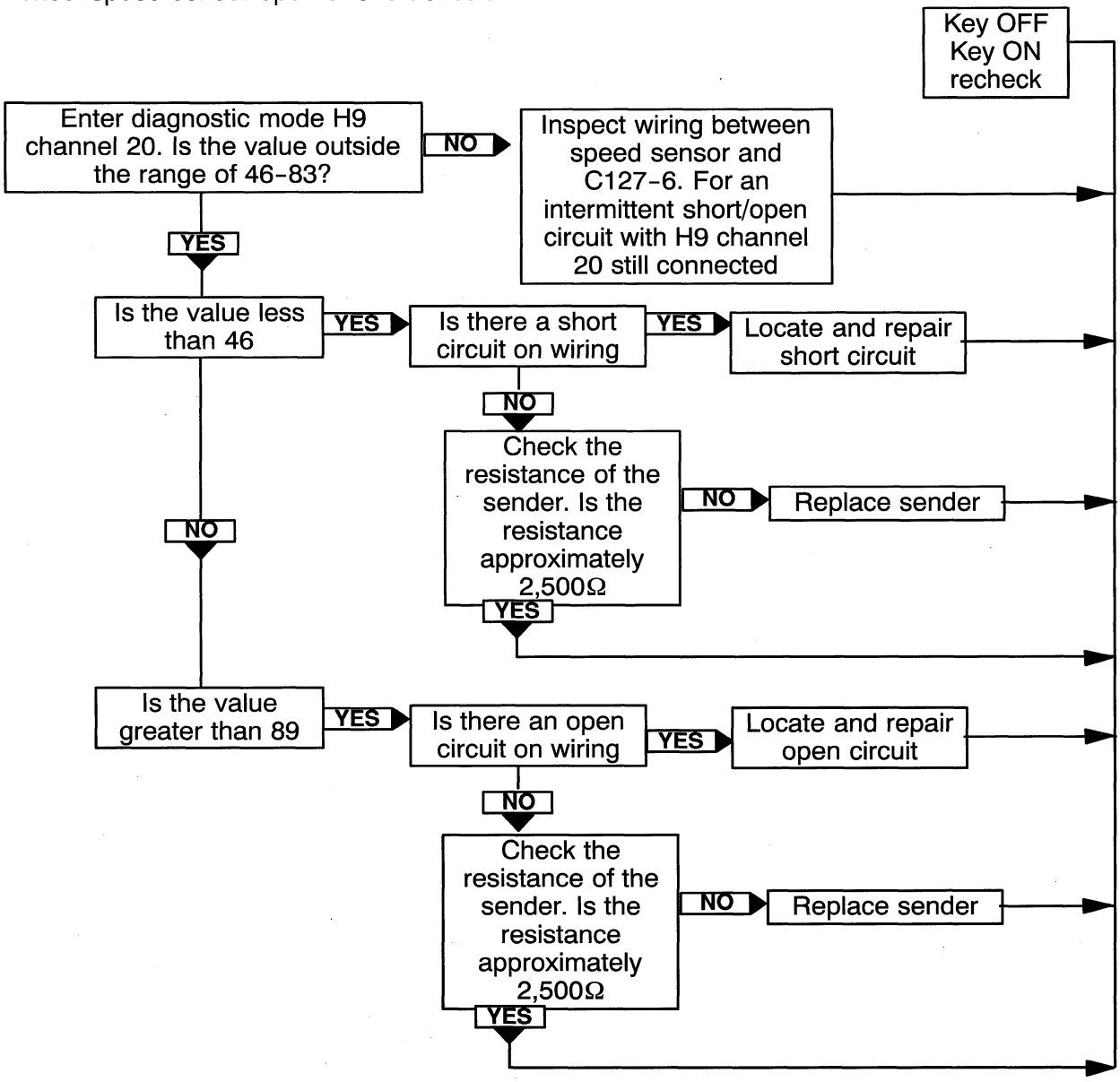

DIAGRAM 20 - Error Code E26 displayed - ERPM signal too high

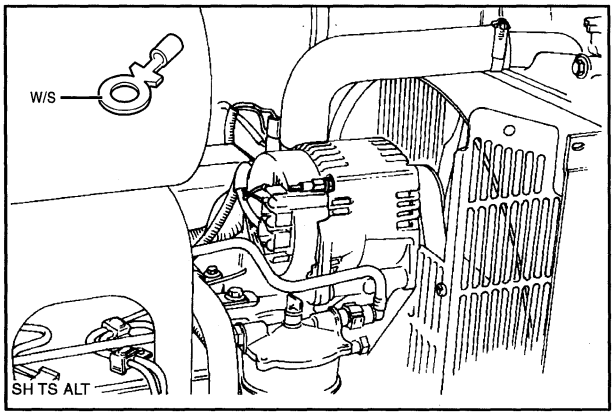

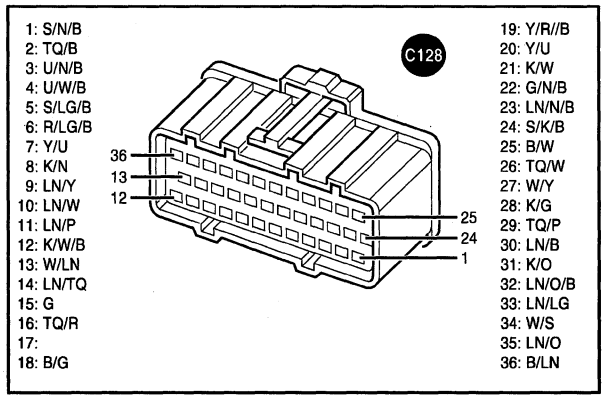

C128-34 — 2015-W/S — 2015-W/S — C001-F — 2015-W/S — C013-W/S

DIAGRAM 20 - Error Code E26 displayed - ERPM signal too high

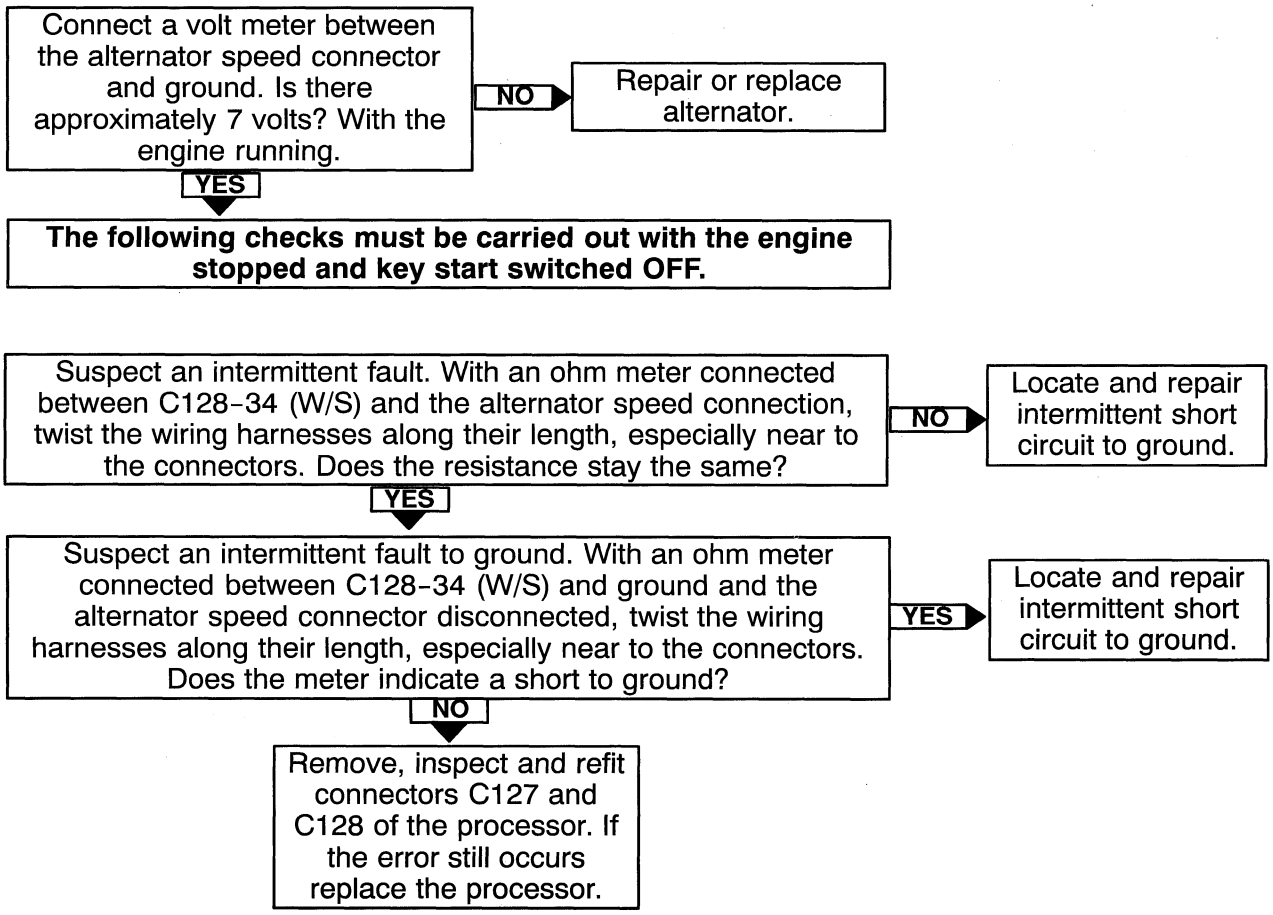

DIAGRAM 21 - Error Code E27 displayed - ERPM signal not present

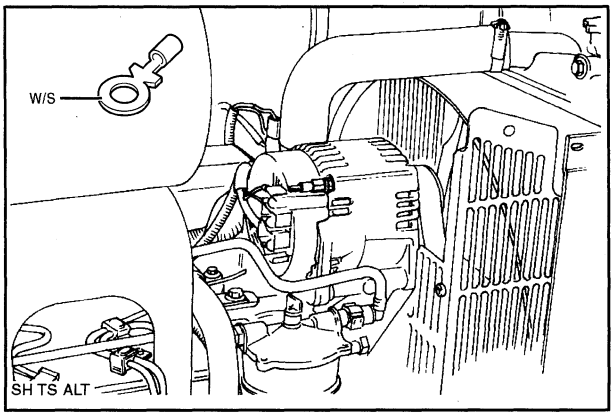

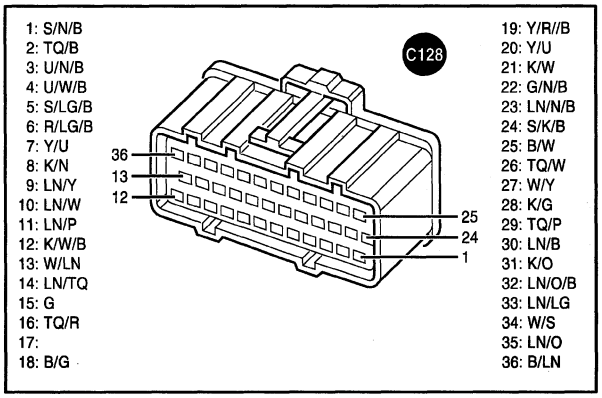

C128-34 — 2015-W/S — 2015-W/S — C001-F — 2015-W/S — C013-W/S

DIAGRAM 21 - Error Code E27 displayed - ERPM signal not present

Wheel speed sensor open or short circuit.

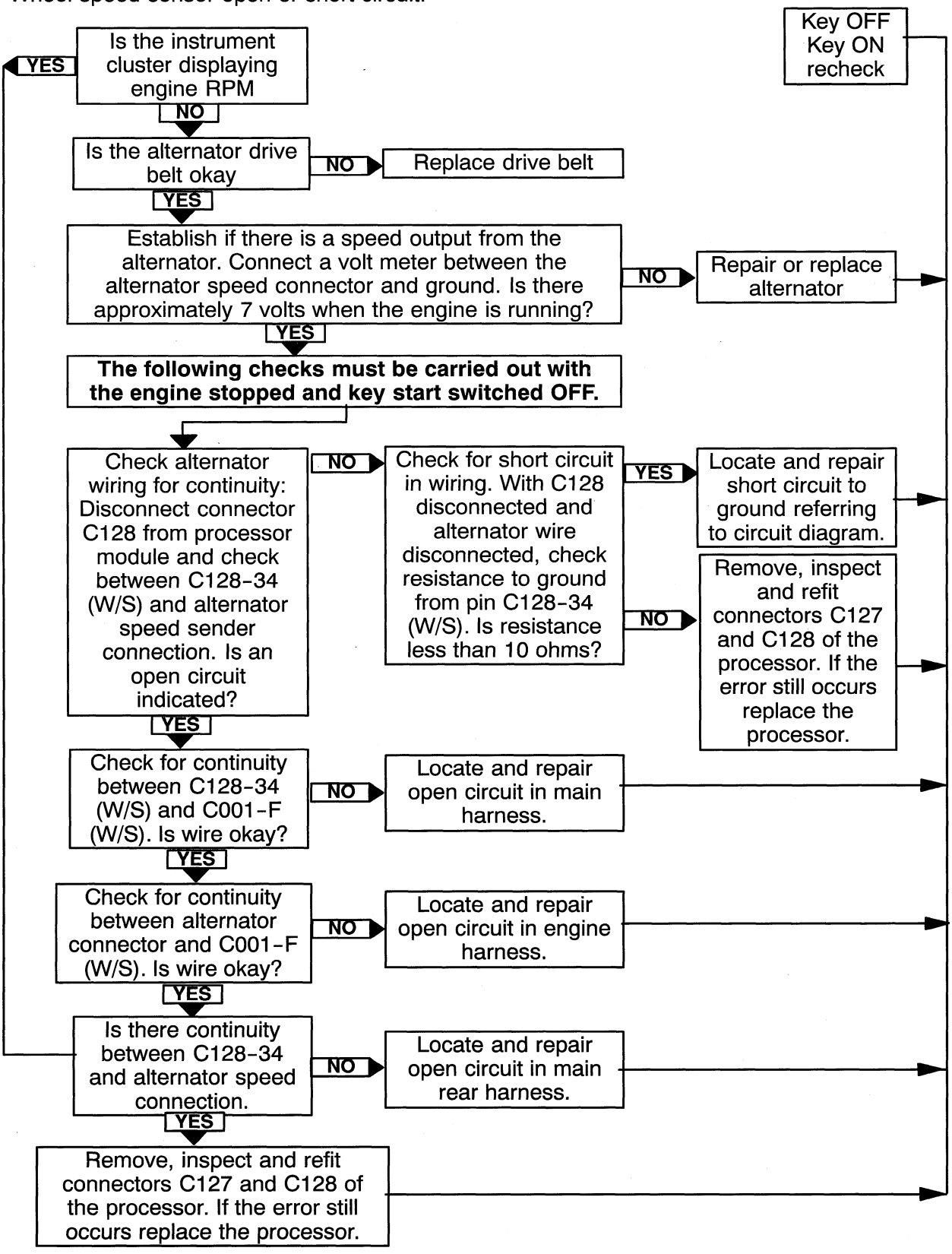

DIAGRAM 22 - Error Code N displayed

Clutchless shuttle operation attempted at too high a speed and in too high a gear

A warning bleeper and symbol 'N' are activated under the following conditions:

- In high range 5-8 gears, shuttling while tractor is still rolling.
- In high range 2-4 gears, shuttling while tractor is rolling faster than 9 Km/h (5.5 mph)

Important: *The clutchless shuttle will still operate under the warning conditions. Clutch damage may occur if the shuttle operation is carried out.*

DUAL COMMAND REMOVAL

NOTE: *To remove the dual command unit, the tractor must be separated between front transmission and the engine, refer to, 'Separating the Tractor.'*

Disconnect the three dual command oil feed pipes through the aperture at the right hand side of the front transmission.

Remove the top two dual command attaching bolts and install 2 off studs (M10) threads approximately 12 in (304mm) long, into the bolt holes, Figure 181.

NOTE: *The gearbox top cover will require removal to ensure the synchroniser and cone are not dropped or damaged as they may fall loose from the rear of the dual command unit during removal, Figure 183.*

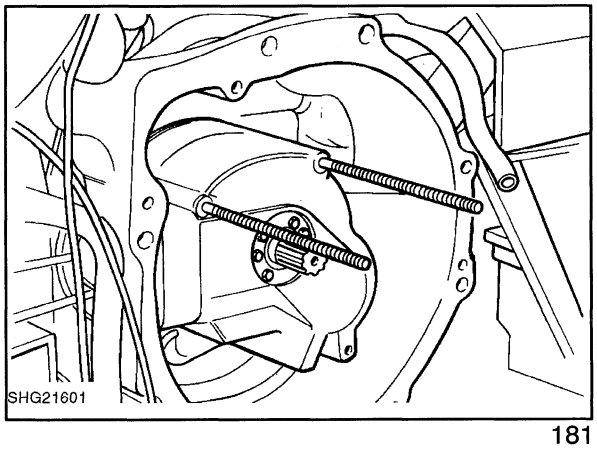

181

NOTE: *The oil lubrication tube is a tight fit in the dual command body and may remain in position in the dual command on removal from the vehicle. It is recommended that this is removed to avoid damage during disassembly of the dual command.*

Remove the remaining 4 attaching bolts and pull the dual command unit forward sufficiently to attach a lifting strop and hoist, Figure 182.

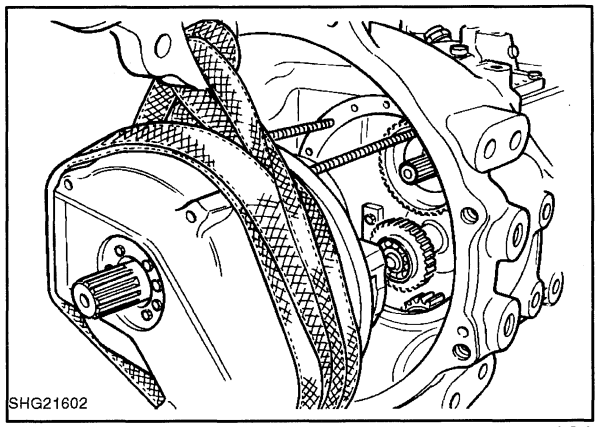

182

Carefully remove the dual command unit (using the hoist and strop) from the transmission.

Note the following components after the dual command unit is removed

1. Reverse/Forward Cone
2. Reverse/Forward Synchroniser
3. Oil Lubrication Tube and 'C' Clip

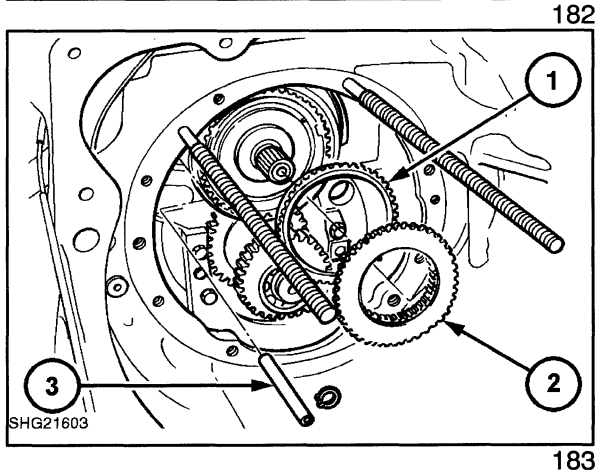

183

DUAL COMMAND OVERHAUL

Dual Command Components refer to, Figure 184

1. Lubrication Tube with 'C' Clip
2. Backplate
3. C1/C2 Clutch Body
4. Polyimide Washer
5. Housing Attaching Bolt 6 off
6. Support Shaft Attaching Bolts 7 off
7. Centre Shaft Seal
8. Housing
9. Bearing
10. UnderDrive Gear Assembly
11. Pre Load Bearing Shims
12. Pre Load Bearing
13. Pre Load Bearing Support
14. Attaching bolts 3 off
15. Backplate Attaching Bolts 4 off
16. Reverse/Forward Synchroniser Cone
17. Reverse/Forward Synchroniser Gear
18. 'C' Clip
19. Spacer
20. Bearing
21. Underdrive Gear Assembly
22. Needle Bearing
23. Bearing
24. Gasket
25. Lubrication Valve
26. Attaching Hardware
27. Polyimide Washer (Item 4)
28. Needle Bearing
29. 'O' Rings
30. Support Shaft
31. Support Shaft Sealing Rings
32. Roller Bearings
33. Underdrive Output Gear
34. C1 Hub
35. C1 Hub Sealing Ring
36. Thrust Washer (with lubrication groove outboard)
37. Clutch Pack Assembly
38. Piston internal 'O' Ring
39. Piston
40. Piston External Sealing Ring
41. Spring Pack
42. 'C' Clip
43. Thrust Washer (Position lip to clutch plate face, lubrication groove outboard)
44. Drive Shaft
45. Spacer
46. Sealing Ring
47. C2 Hub Sealing Ring
48. C2 Hub
49. 'C' Clip Clutch pack Retaining
50. End Plate
51. Friction Disc
52. Steel Disc
53. Separator

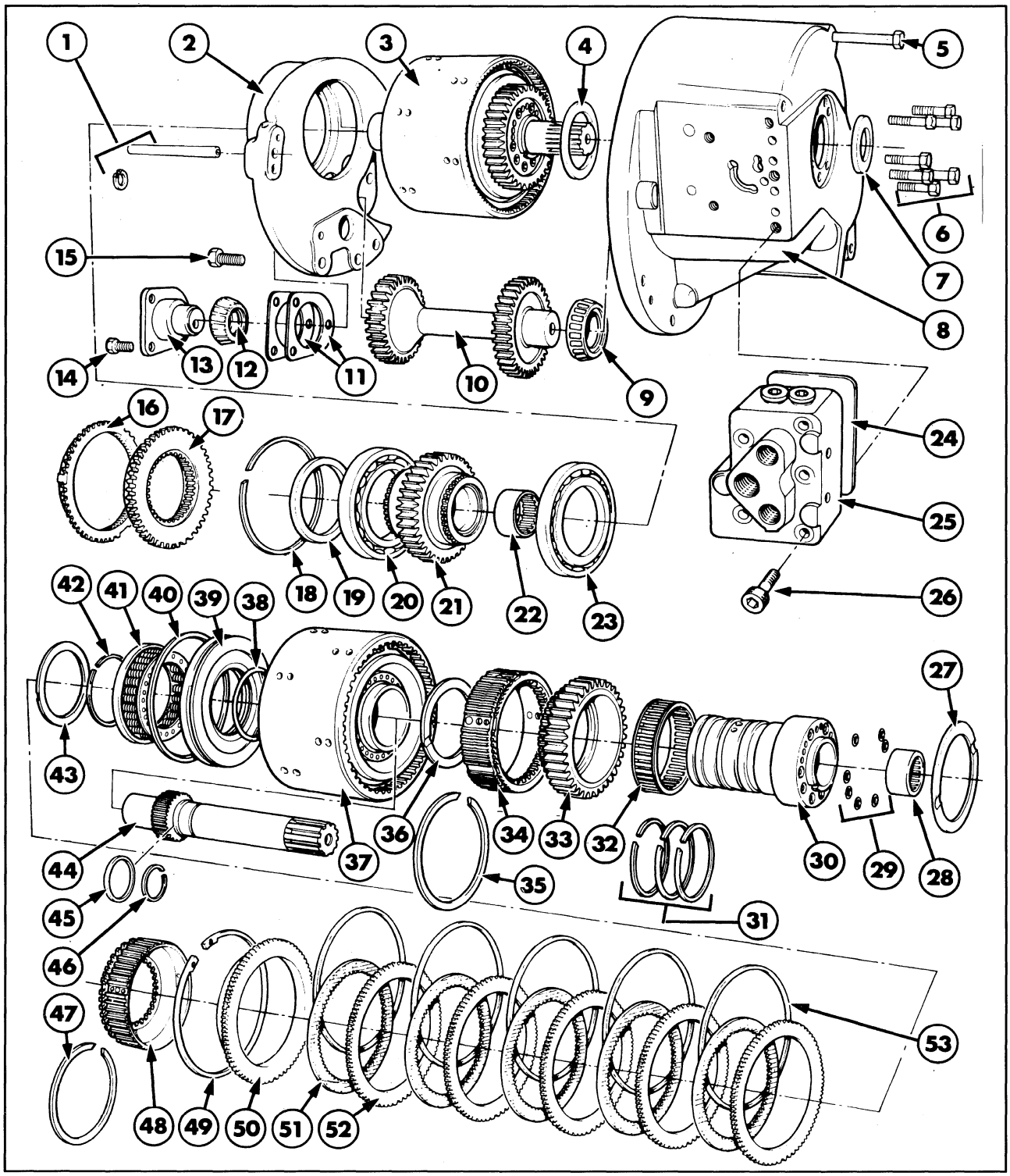

Dual Command Exploded View 184

NOTE: *Items 1, 16 and 17 are located between the Dual Command Unit and the Gear Box Mating Parts*

With the Dual Command unit positioned on a work bench remove the rear plate bolts (2), (Note various bolt lengths) and remove the bearing (1)/shim (3) assembly, Figure 185.

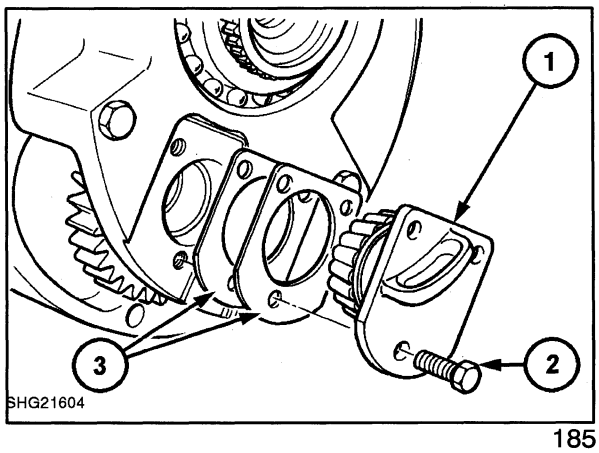

185

Place the unit on its rear face and remove the support shaft bolts, from the outer housing.

Lift outer housing from backplate to expose clutch pack assembly and underdrive gear, Figure 186, note polyimide washer (1).

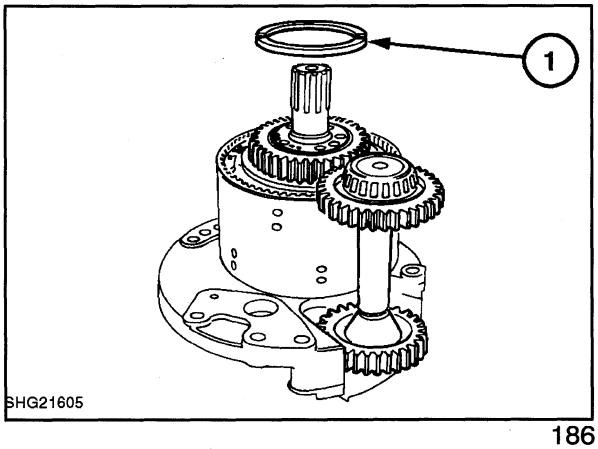

186

UNDER DRIVE GEAR ASSEMBLY

Overhaul

With the under drive gear cluster removed inspect for damage, nicks or burrs to the gears. Heavy damage or wear will result in fitting a new under drive gear assembly.

Inspect the bearing for wear or damage and replace with new if required. The bearing can be pulled from the shaft using a suitable puller if it is to be replaced.

SUPPORT SHAFT ASSEMBLY

To remove support shaft (3), install bolts (1) in the end of the shaft and withdraw from the clutch pack (2), Figure 187.

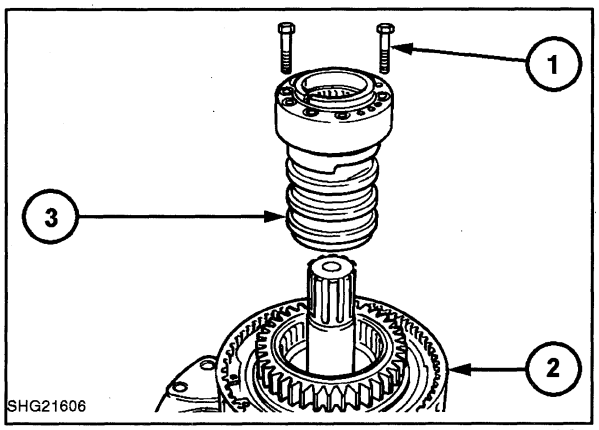

187

Overhaul

1. Remove the seal rings (2) from the support (1) and inspect for wear and damage, renew parts as required, Figure 188.

NOTE: *The internal needle bearing (4) may be damaged when removed for inspection. When replacing push the bearing upto within 0.125in (3.2mm) of the internal shoulder.* ***Do not push*** *bearing upto to the shoulder as the bearing may be distorted.*

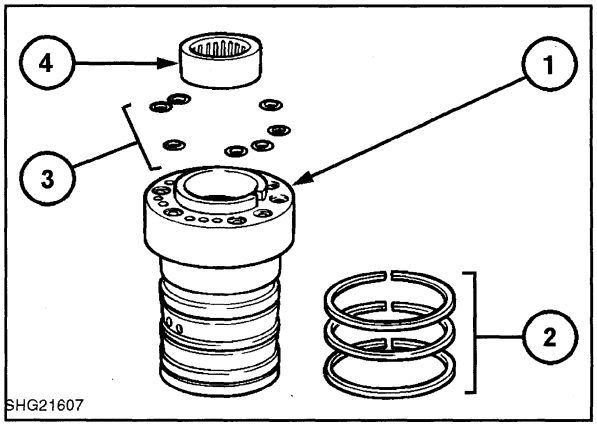

188

2. Refit new sealing rings (2) and 'O' Rings (3) upon re-assembly.

Withdraw the following as per, Figure 189.

- Needle roller bearing (1)
- Underdrive Output Gear (2)
- Centre Hub (3), with seal (4).

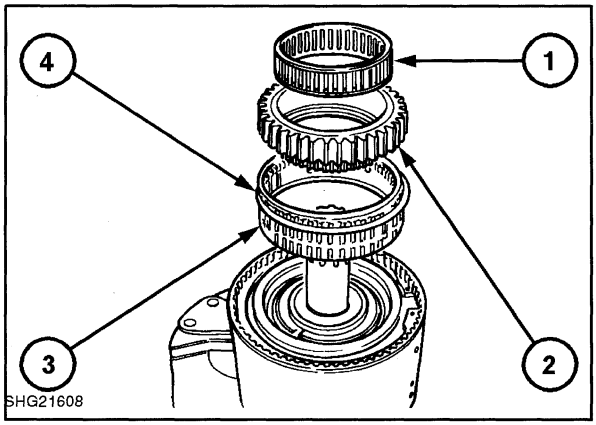

189

C1 - CLUTCH PACK DISASSEMBLY (UNDER DRIVE SIDE OF THE CLUTCH)

Lift the clutch housing from the backplate ensuring clutch hub does not fall out and become damaged, remove centre shaft and place clutch on a workbench.

Disassemble the clutch pack by removing the 'C' Clip and remove all of the steel discs, friction discs and spring separators.

Spring Pack

With the clutch pack removed, the piston spring pack can be removed in the following manner:

Place clutch assembly (2) on press bench (1) and using tool FT 508 (4), apply sufficient pressure to allow removal of the clutch spring pack retaining ring (3). Remove ring, ease pressure off and remove spring pack, Figure 190.

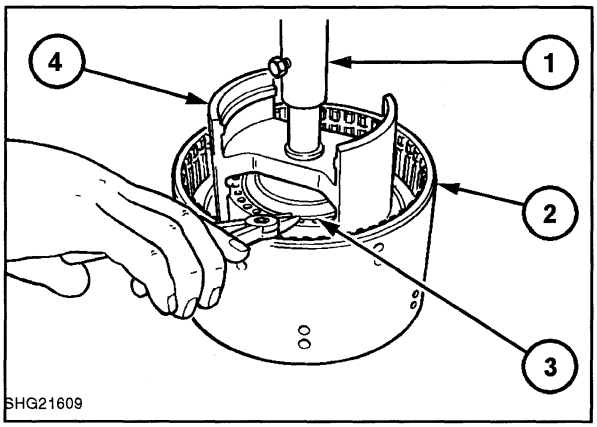

190

Overhaul

Inspect the spring assemblies for cracked coils or deformation of the assembly, **especially the pressed steel endcap**.

The spring tension can be checked by applying a load to the assembly as in, Figure 191, or comparison with a new one. If in doubt renew the spring assembly.

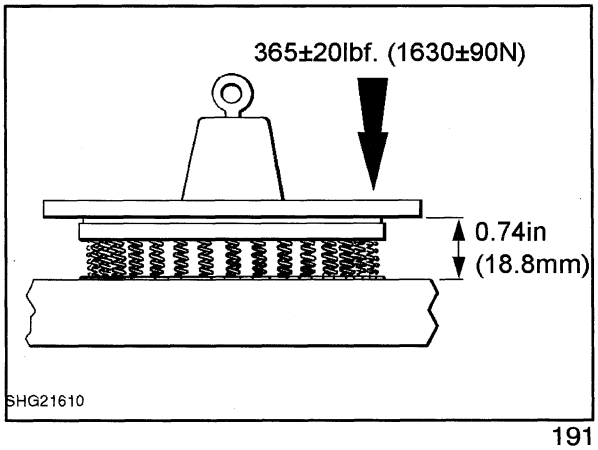

191

Piston Removal

1. To remove the piston from the housing place the support shaft back into the housing. Position an air line nozzle (1) into an oil feed hole in the support shaft and blanking the exhaust port with a plug (2) apply sufficient air pressure to push the piston from the housing, Figure 192.

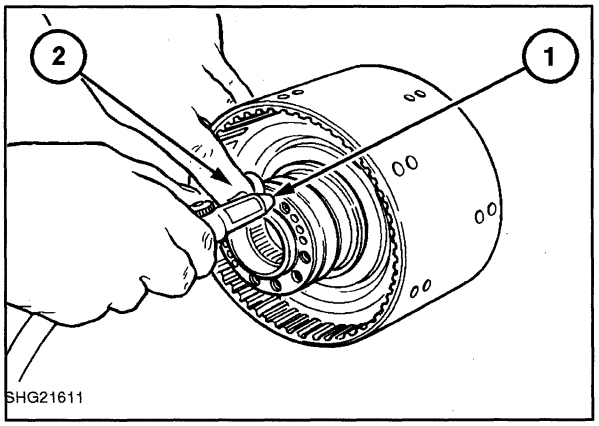

192

Overhaul

Ensure seal face is free of nicks or damage, repair or renew the piston if damage is evident. Renew inner and outer piston seals.

Re-Assembly

1. Lubricate the piston (2) with Transmission oil (Ambra Multi G) and using guide tool 4FT 504 (1), push the piston into the guide body (4) and on into the clutch housing, Figure 193.

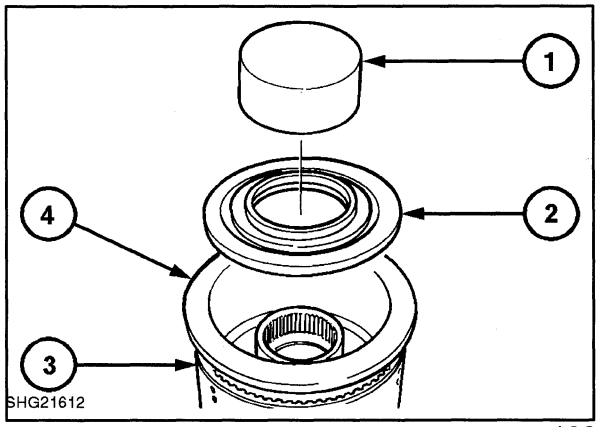

193

C1 - Overhaul

Check plates and discs for wear, damage, scoring, flatness or discolouring renew if in doubt.

The spring separators can be checked by measuring free height and compressed height by application of weights on a parallel surface, as shown in, Figure 194.

Spring Separators

1. **Free Height** = 0.200ins (5.08mm)
2. **Load Height** = 0.105ins (2.67mm) With a weight of 40lbs (18kgs)
3. **Load Height** = 0.073ins (1.88mm) With a weight of 95lbs (43kgs)

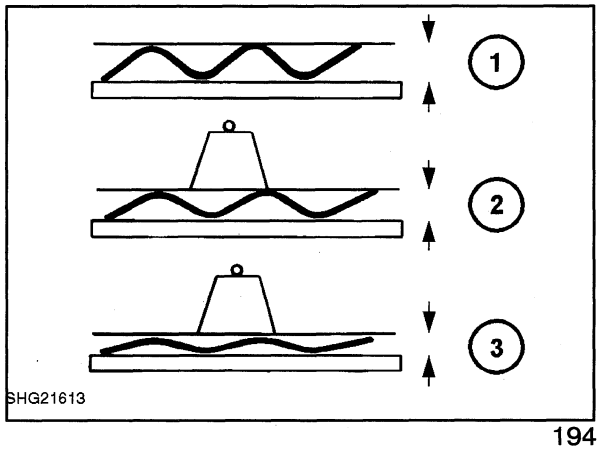

194

If the separators are not to specification as listed in, Figure 194, they must be replaced.

1. Using press tool as previously described for disassembly, re-assemble the spring pack into housing (3) and refit the retaining clip.
2. Re-assemble discs (5 off each) in order: Steel disc (2), friction disc (4) and spring separator (1).

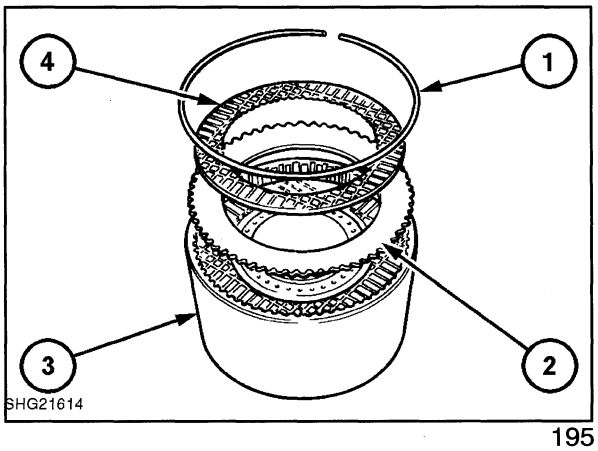

195

- Continue up to and including the fifth steel Plate.
- Compress the plates by hand and hold in place by inserting three rods (1) in the upper most lubrication outlet holes, Figure 196.

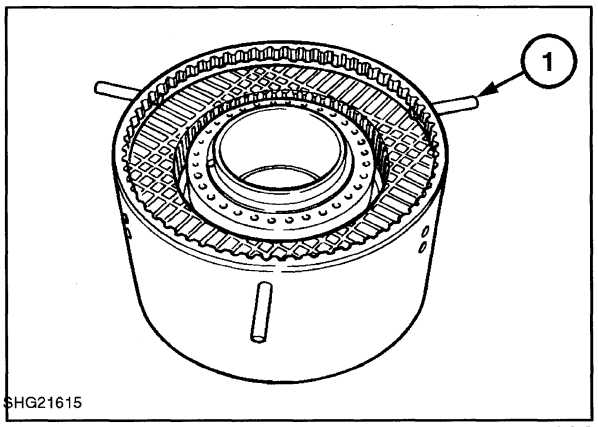

196

- Fit the the fifth friction disc separating spring and end plate on top of rods and secure the assembly with the retaining clip (1), Figure 197.
- Remove the rods.

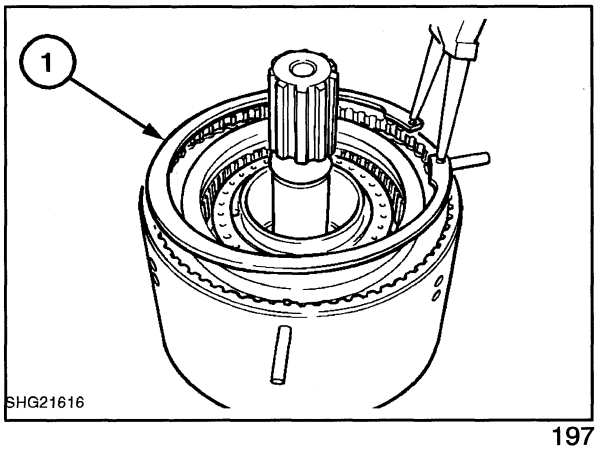

197

Clutch Pack Setting Procedure

With the clutch pack re-assembled, the clearance of pack to housing under load, will require checking, as follows:-

1. Using a weight of 90-100 lbs (40-45kgs) applied to the end pack, measure using a dial indicator or depth gauge the distance from the top face of the end plate to the edge of the housing, Figure 198.

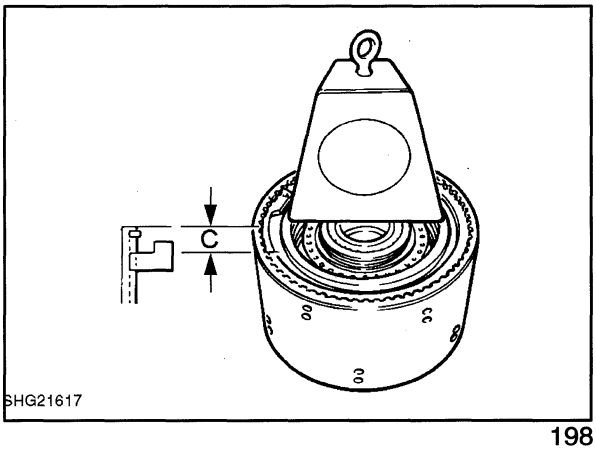

198

2. Release the pack and measure the distance again, the difference 'C' of these two readings should be should be between 0.088-0.110 in (2.25-2.8mm).

3. If not to specification disassemble the pack, stack the 0.069 in (1.75mm) separator plates and measure their combined thickness. Swap them for 0.079 in (2.0mm) spring separators to achieve the specification, depending on original clearance.

C2 - CLUTCH DISASSEMBLY (DIRECT DRIVE SIDE OF THE CLUTCH)

Disassembly, re-assembly and setting of the clutch pack is the same as for C1 clutch.

BACK PLATE ASSEMBLY

1. To disassemble the bearing assembly from the end plate remove the circlip and push the bearing assembly out, Figure 199.

2. The bearing can be fully disassembled by using a suitable pulling attachment, Tool No. 951 or similar between the gear and bearings.

Overhaul

1. Check the bearing assembly for signs of wear, scoring or damage and renew as required.

2. Check back plate for damage or distortion and repair or renew as required.

Re-assembly

1. Rebuild the bearing assembly and push into the back plate, refit the bearing retaining circlip.

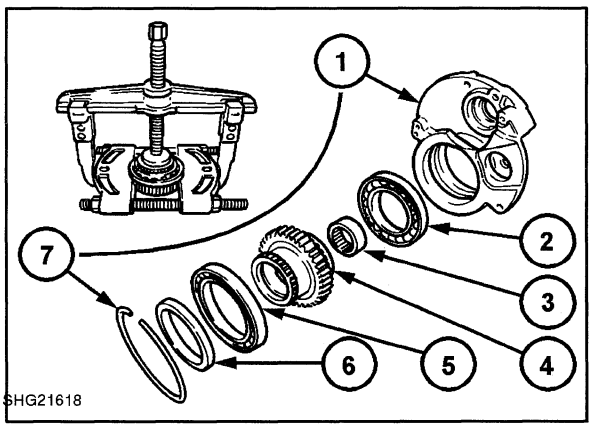

Back Plate Assembly 199

1. Back Plate
2. External Bearing
3. Needle Bearing
4. Bearing Support
5. External Bearing
6. Spacer
7. Circlip

CLUTCH PACK ASSEMBLY TO BACK PLATE

1. Fit a new seal and spacer and tap the input shaft into the clutch spline until mating end faces are flush. Support the assembly with the C2 (DD) clutch facing upwards.

2. With the clutch assembly (2) supported on wood place thrust washer (with oil lubrication slot facing outboard) on piston face, fit a new seal (3) to the hub (1) and insert into the clutch plates, it may be necessary to rotate the hub back and forth to locate the hub splines into the clutch splines, Figure 200.

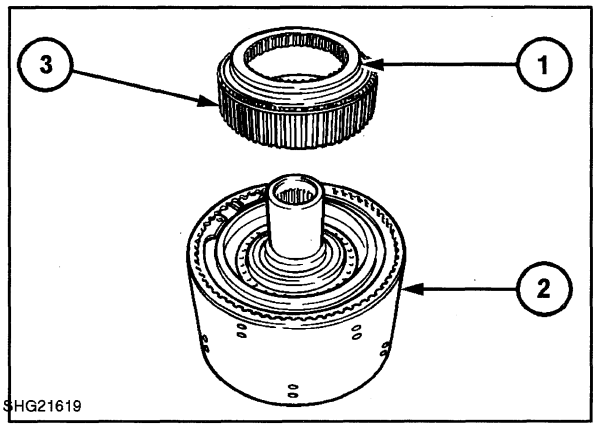

200

3. With the end plate assembly on its side, position the clutch (1) onto the backplate (2) to allow engagement between clutch hub and the rear bearing gear spline, Figure 201.

Turn the entire assembly over onto the back plate assembly.

4. Install the thrust washer over the spring pack retaining ring (with the shoulder down), Figure 204.

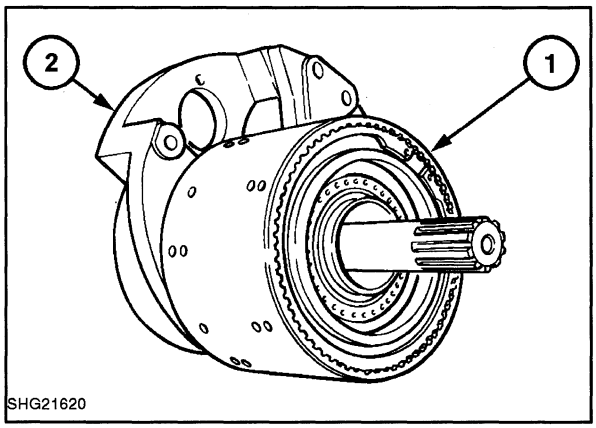

201

5. Fit seal to hub and place hub into clutch pack, rotating back and forth to align the splines.

6. Refit the gear to hub, place needle bearing (3) into gear and refit support shaft (1) (taking care not to damage the support shaft seal rings (2)), Figure 202.

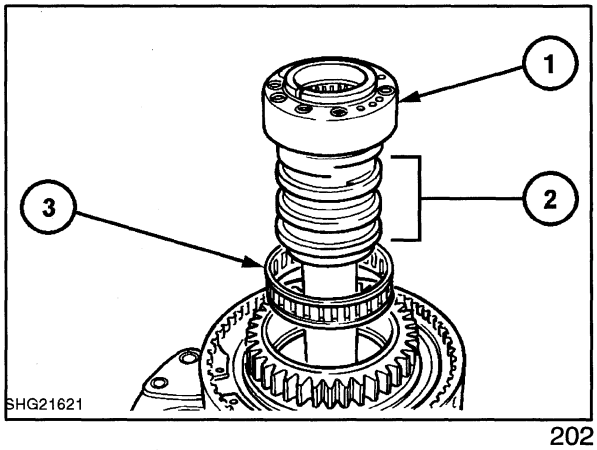

202

7. Place the under drive gear cluster in position.

8. Fit 7 off new 'O' Rings (2) onto the support shaft bolt hole counter bores, Figure 203.

Support Shaft Sealing

1. Polyimide Washer
2. 'O' Rings 7 off

9. Using grease to prevent movement place the polyimide bearing washer (1) in position on the (DD) gear face between the support shaft and outer housing.

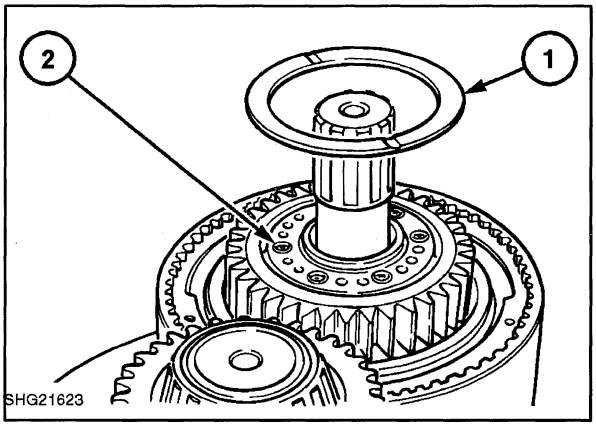

203

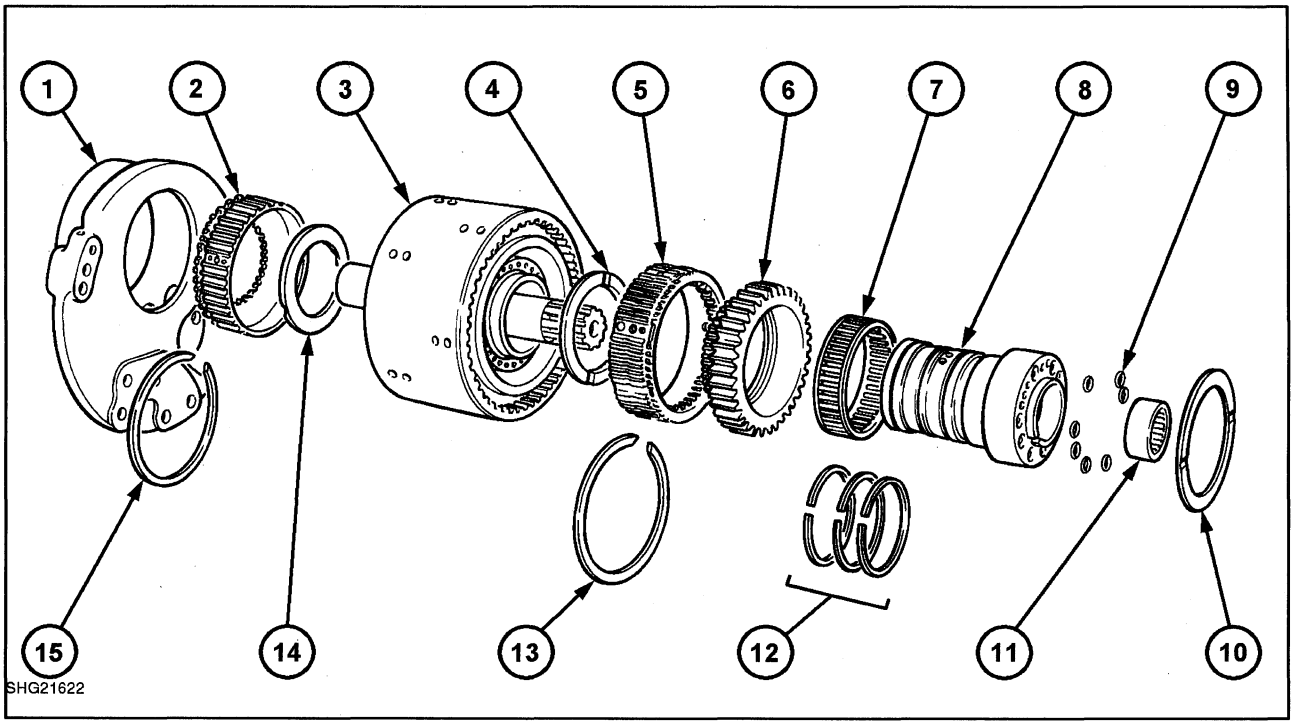

Clutch Re-Assembly 204

1. Back plate
2. C2 Direct Drive Hub
3. Clutch Housing
4. Thrust Washer (Oil Groove Facing Outboard)
5. C1 Underdrive Hub
6. Underdrive Output Gear
7. Roller Bearing
8. Support Shaft
9. 'O' Rings - 7 off
10. Polyimide Washer
11. Needle Bearing
12. Support Shaft Sealing Rings
13. C1 Hub Seal
14. Thrust Washer (Lip to Clutch Face, oil groove facing outboard)
15. C2 Hub Seal

DUAL COMMAND HOUSING

NOTE: *It is recommended the output shaft seal in the main cover be renewed upon re-assembly of the cover.*

1. To assist assembly of the cover orientate the oil drain cutout in the support shaft to align as close as possible to the oil slot in the main casting.

2. Lower the main casting over the dowels lining up the M6 bolt holes in the support shaft, then fit and torque the 7 off M6 screws to, 7-10 lbs ft (9-13Nm).

3. Install and tighten the M10 x 40mm bolt to, 25-33 lbs ft (33-45Nm) then carefully turn the assembly over onto a support block, fit and torque the remaining M10 x 55, 70 and 90mm bolts, 25-33 lbs ft (33-45Nm).

BEARING AND SHIM ASSEMBLY

With the bearing retainer bolts torqued down, a pre load should be achieved on the under drive cluster. This pre load can be achieved in the following manner.

1. Install bearing retainer with excess shims of approximately, 0.040 in (1.0mm) and torque the retainer bolts to 30-44 lbs ft (40-60Nm).

2. Attach a dial indicator (1) to the housing in a position to contact the gear face and measure end float (2), Figure 205.

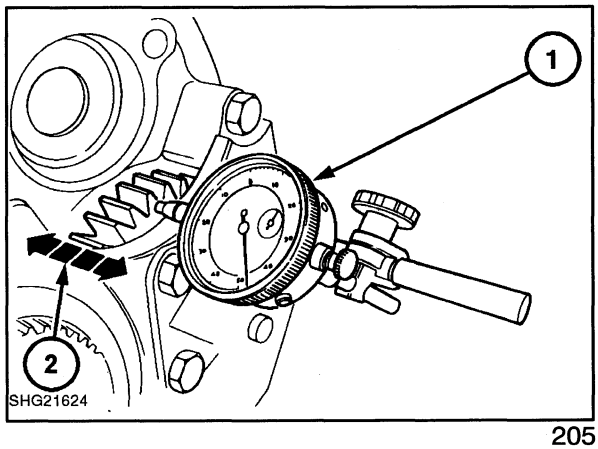

205

3. Calculate the shims required using the following guide:-

Shim Thickness Required =
(Excess Shims - End Float) - Pre Load

Excess Shims = 0.047 in (1.19mm)
End Float = 0.015 in (0.38mm)
Minus
Average. Pre Load = 0.002 in (0.05mm)

Shim Thickness Required = 0.030 in (0.76mm)

4. With the correct shims in place refit the bearing assembly and torque the M10 X 20mm bolts to 30-44lbs ft (40-60Nm).

OIL LUBRICATION TUBE

1. Tap the oil lubrication tube into the dual command housing until fully seated, or does not protrude from the dual command end face beyond 4.590 in (116.5mm).

IMPORTANT: *If the oil lubrication tube is not fully seated, once reassembled the tube may protrude too far into the oil gallery in the gearbox and restrict the oil flow.*

DUAL COMMAND ASSEMBLY INTO GEAR BOX

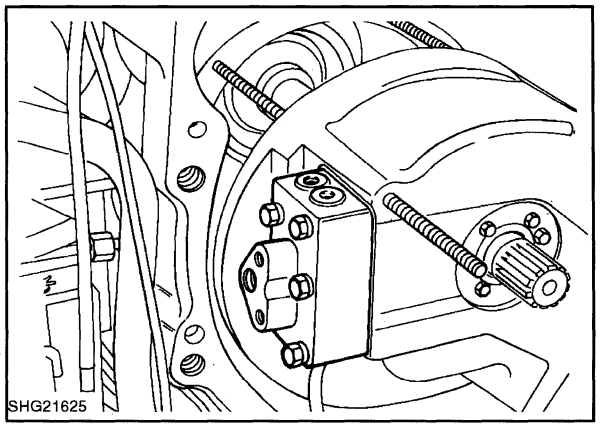

206

NOTE: *All 'O' Rings, seals and gaskets should be renewed on re-assembly.*

1. With the dual command re-assembled and using a strop and hoist move the unit to the gear box.

2. Apply vaseline to the three lugs on the forward reverse gear synchroniser (3), Figure 207 and place into position in the gear box, vaseline the synchronizer cone (2), Figure 207 and position on the dual command drive gear end.

3. Apply vaseline to the gear box mounting face and adhere the gasket.

NOTE: *The gearbox top cover will require removal to ensure correct engagement of the reverse gear cluster and to aid assembly of the oil lubrication tube.*

4. Carefully guide the dual command unit onto the studs in the gear box aligning the rear gear cluster and oil tube (1) with 'C' clip up to the face of the gear box, Figure 207.

5. Install the attaching bolts and torque to 25-33 lbs ft (33-45Nm).

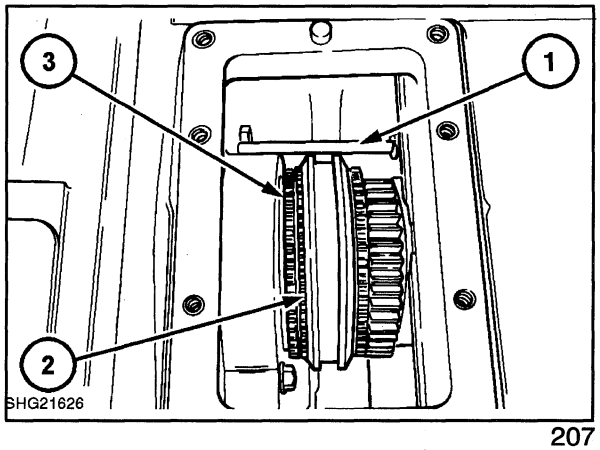

207

LUBRICATION VALVE REMOVAL AND OVERHAUL

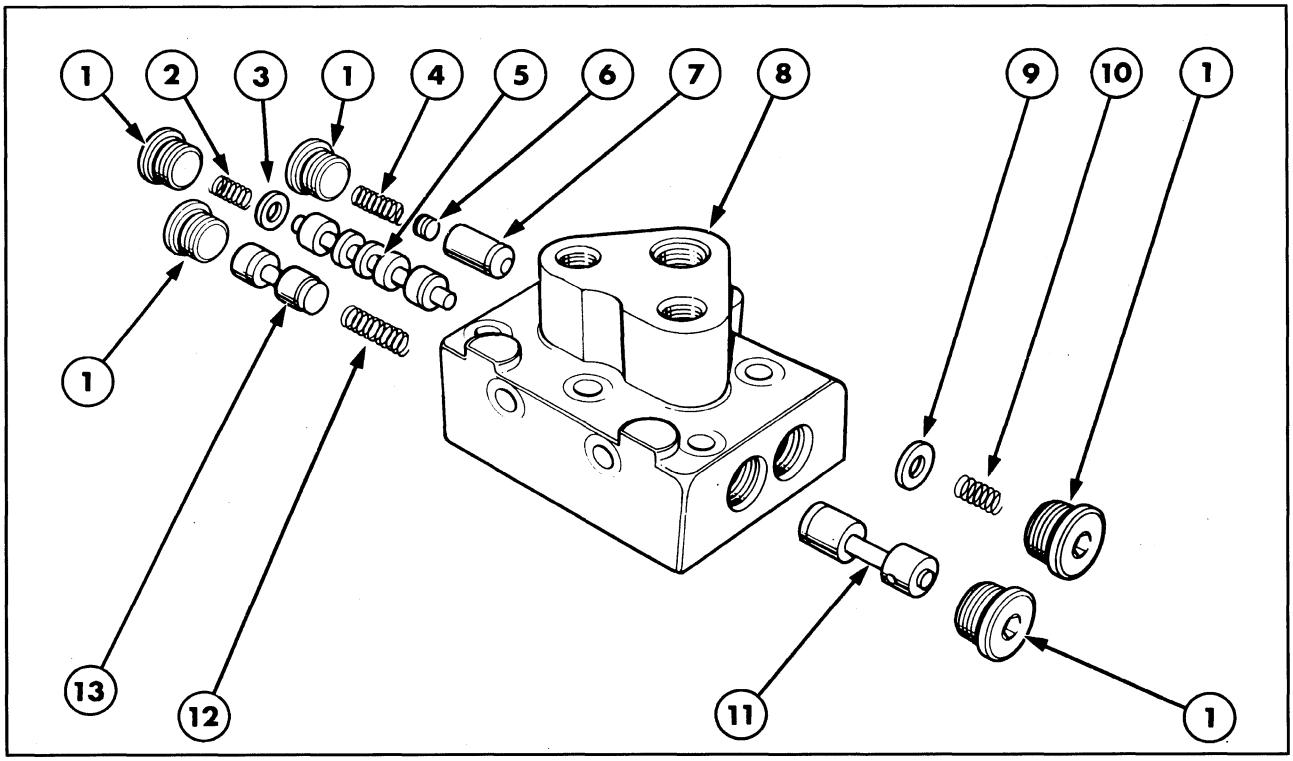

Lubrication Valve 208

1. End Plug
2. End Plug
3. Lubrication Cut Off Valve C1
4. Spring
5. Lubrication Cut Off Valve C2
6. End Plug
7. End Plug
8. Spring
9. Washer
10. Valve Spool
11. Washer
12. Spring

Removal

NOTE: *The lubrication valve can only be accessed once the vehicle is separated between the engine and front transmission.*

Remove the valve 5 attaching bolts and withdraw the valve from the dual command.

Overhaul

With the valve disassembled as in, Figure 208, inspect all parts for signs of wear or scoring and renew any suspect parts.

Re-Assembly

NOTE: *All 'O' Rings, seals and gaskets should be renewed on re-assembly*

1. Re-assemble the lubrication valve as shown in, Figure 208, ensuring all parts are clean and free of debris.
2. Tighten the end plugs to a torque of 11-16lbs ft (15-22Nm)
3. Refit the valve to the dual command and torque attaching bolts 11-16lbs ft (15-22Nm).

TRANSMISSION CONTROL VALVE REMOVAL AND OVERHAUL

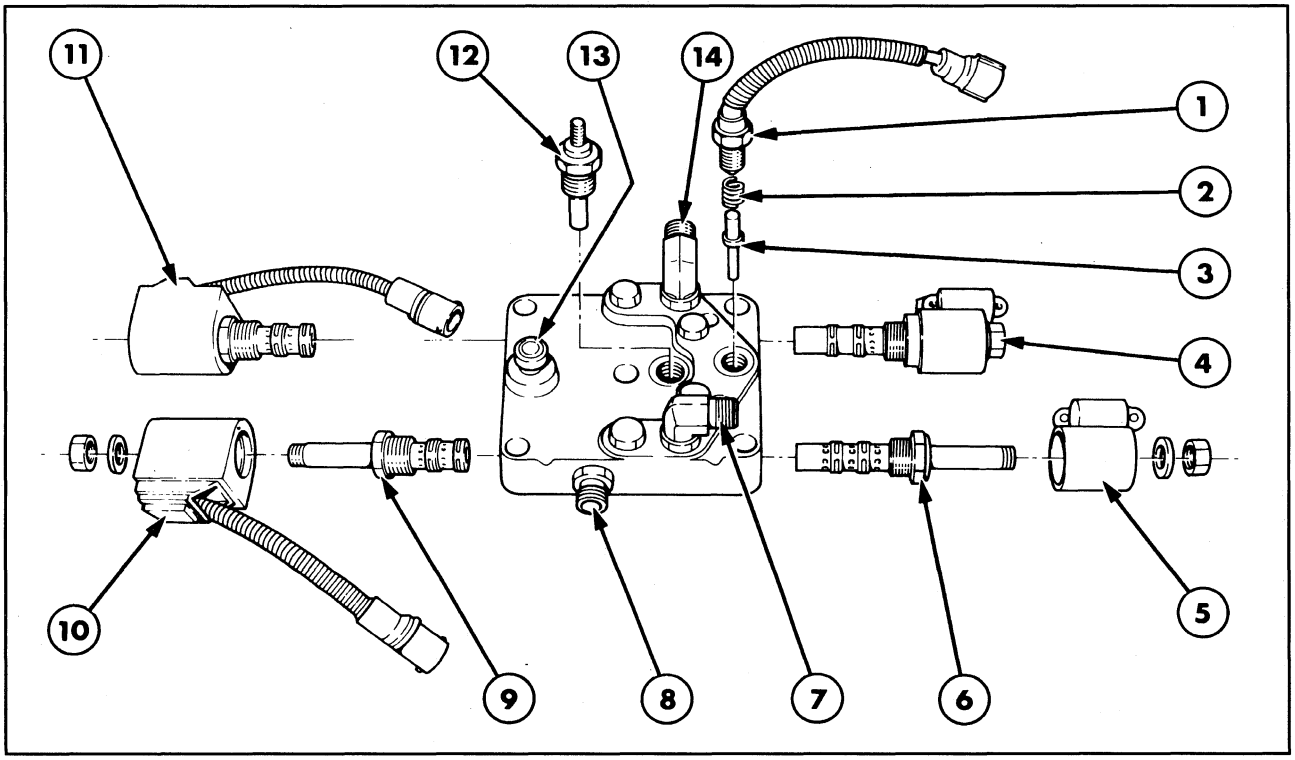

Transmission Control Valve 209

1. 1/2 status Switch
2. Spring
3. Plunger
4. Pulse Width Modulation Solenoid C1 Clutch (UD)
5. PWM Solenoid C2 Clutch (DD)
6. PWM Valve C2 Clutch (DD)
7. Direct Drive Oil Supply
8. Four Wheel Drive Oil Feed
9. Four Wheel Drive Valve
10. Four Wheel Drive Solenoid
11. Dump Valve
12. Temperature Sender
13. Oil Feed From Pump
14. Oil Supply (UD)

Removal

1. To remove the transmission control valve mounted on the right hand side of the transmission, disassemble the oil tube connections (3) and solenoid electrical connections (2), Figure 210.

2. Remove the 5 attaching bolts (1) from the valve body and withdraw from the transmission, Figure 210.

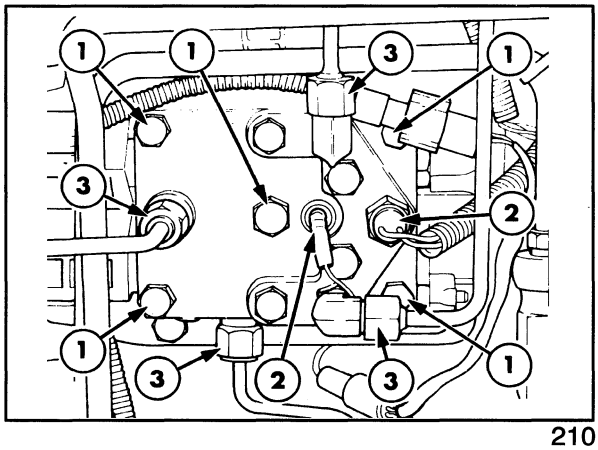

210

3. Withdraw the 'L' shaped plunger (1) from the position in the transmission and check for sticking, wear or damage, replace if in doubt, Figure 211.

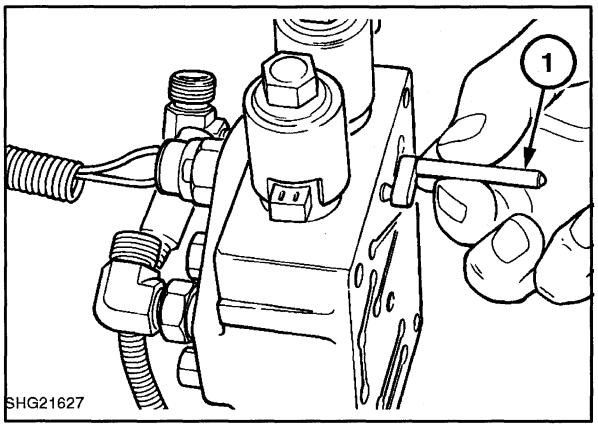

211

Re-Assembly

NOTE: *All 'O' Rings, seals and gaskets should be renewed, upon re-assembly.*

1. Refit the valve with a new gasket, torque attaching bolts to, 24-26lbs ft (33-35Nm

IMPORTANT: *To avoid damage to the solenoid body (coil) on reassembly it is recommended that the valve is fitted independently of the coil, as follows.*

- Refit the solenoid valves (less body) to the control valve and torque nut to 25-33lbs ft (34-45Nm)

- Re-assemble the (solenoid body to valve) and torque attaching nut to 1.3-1.4lbs ft (1.7-1.8Nm).

1. Reconnect the solenoid valve harness connectors.

2. Refit the oil tube connectors to the transmission control valve body and torque to 24-26lbs ft (33-35Nm).

3. Attach the oil feed tubes to the connectors and torque to 24-26lbs ft (33-35Nm).

FRONT AXLE

Four Wheel Drive Axle Transfer Box
Tractors With 8 x 2 And 16 x 4 Transmission

SPECIFICATIONS, TIGHTENING TORQUES AND SPECIAL TOOLS

SPECIFICATIONS:

Type	Rear axle centralised mounting with electro/hydraulic actuation of dog type non slip clutch. Mechanically engaged/electro-hydraulic release.
Transfer Box Ratio	0.930:1 and 0.907:1
Idler Gear Teeth	44
Driven Gear Teeth	40 and 39
Clearances And Adjustments	
Idler Gear Bearings rolling resistance	0.45 - 1 Kgf (1 - 2.2 lbf) Adjustable by shims
Idler Gear Bearing Shims Available	0.10, 0.25, 0.30, 0.50 mm
Output Shaft Bearings Rolling Resistance	1.9 - 4.5 Kgf (4.2 - 9.9 lbf) Adjustable by shims
Output shaft Bearings Shims Available	0.10, 0.25, 0.30, 0.50 mm
Clutch Spring Free Length	48.0 mm (1.889 in)
Oil Capacity	
Transfer Box Assembly	Lubricated by Rear Axle Oil
Increase in Rear Axle Oil Capacity With Transfer Box Installed	
Litres	1.3
Imp. Pints	2.2
U.S. Pints	2.6
Thread Sealant	New Holland Thread Lock and Seal Part Number 82995773

TIGHTENING TORQUES:

COMPONENTS	lbf. ft	Nm
Transfer Box to Rear Axle Retaining Bolts	49	66
Driveshaft Bolts	42	57
Idler Gear Retaining Bolt	59	80
Oil Drain Plug	59	80
End Plate Bolts	38	51

SPECIAL TOOLS:

DESCRIPTION	V.L. CHURCHILL LTD TOOLS	NUDAY TOOLS	FNH
Idler Gear Bearing Fixture	FT3169	-	-
Pulling Attachment: Small	951	9190	FNH09190
Puller: Large	1003	9516	FNH09516

DESCRIPTION AND OPERATION

The transfer box assembly of four wheel drive tractors installed with either 8x2 or 16x4 transmissions is mounted under the rear axle centre housing and through a universally jointed drive shaft passing along the central axis of the tractor, connects the output from the transmission to the four wheel drive axle.

The transfer box features a simple dog type clutch to engage the drive to the front axle. Engagement/disengagement of the dog clutch is controlled by a combination of hydraulic pressure taken from the low pressure hydraulic circuit and return springs within the transfer box assembly.

A helical gear mounted on the rear axle pinion shaft transmits the drive through a mating helical idler gear, carried in two taper roller bearings in the transfer box to a driven gear on the lower shaft.

Two ratios of transfer box 0.93:1 (44/40) and 0.907:1 (44/39) are available to suit the various front and rear tyre sizes. The ratio is stamped on a plate located on the top left hand side of the transfer box case. The ratio is determined by the number of teeth on the driven, lower, gear. To change the ratio the driven gear is replaced with either a 39 or 40 tooth gear as appropriate.

The lower shaft is supported in two taper roller bearings and has a sliding dog clutch splined to its central portion. The driven gear carries a mating dog clutch and when not engaging with the sliding component is free to rotate on the shaft. The clutch is engaged by four radially positioned springs and released by hydraulic pressure signaled by an electrical switch on the control console.

An electrically operated solenoid valve directs oil from the low pressure hydraulic circuit, via an external tube to the rear end plate of the transfer box. When four wheel drive is disengaged by the operator, the solenoid is actuated and oil flow is directed through the short transfer tube to the central bore of the lower shaft.

A moving double check valve positioned in this central bore moves forward and the pressurised oil flow passes through the centre of the valve by lifting the inner check valve of its seat, Figure 213. Pressurised oil on entering Gallery 'A' moves the sliding clutch against the radially positioned springs, disengaging the dog teeth on the driven gear. The driven gear is now free to rotate on the shaft and drive to the front axle is disconnected.

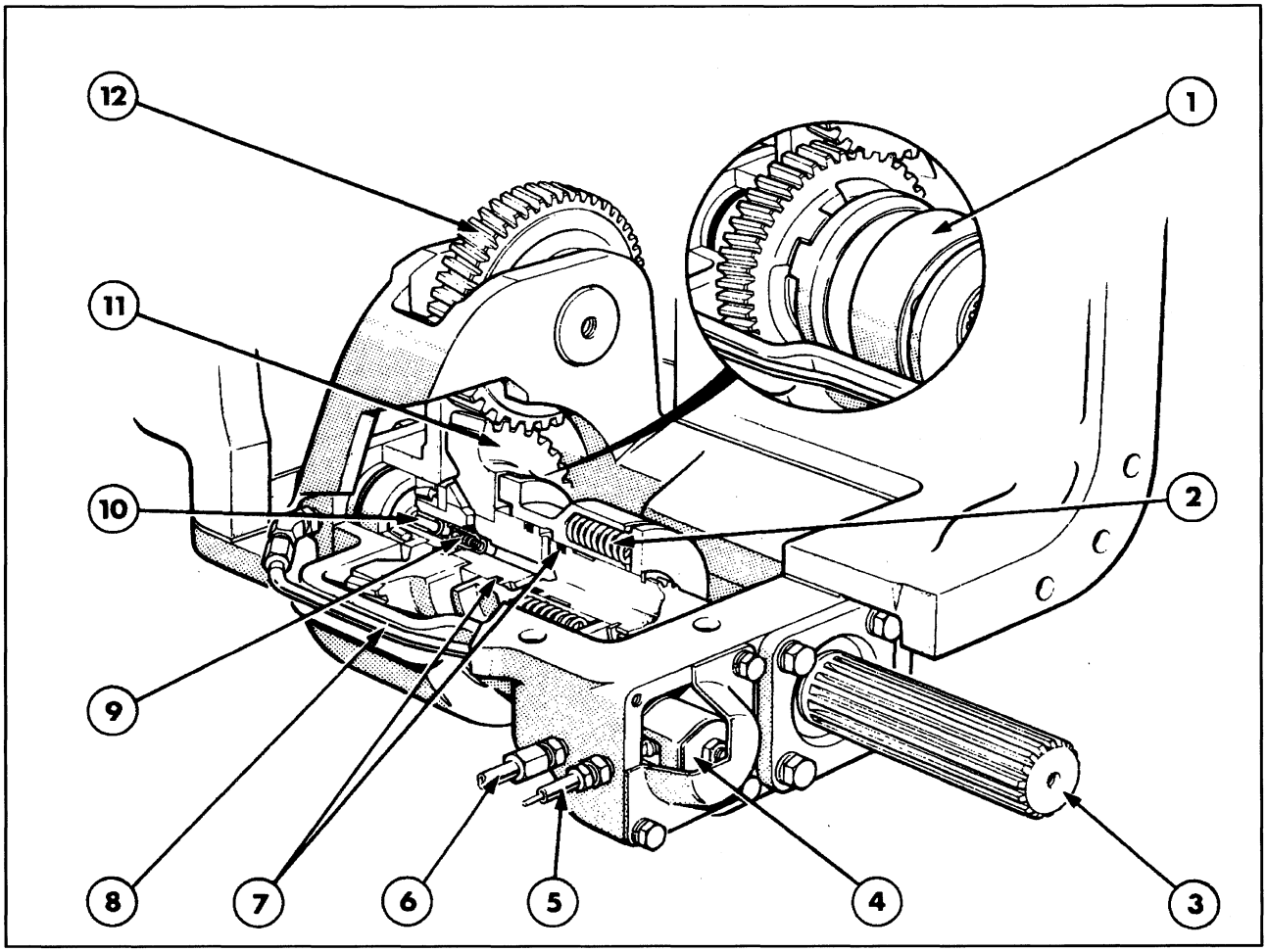

Transfer Box Assembly - Cutaway View 212

1. Sliding Clutch
2. Coil Springs (4 off)
3. Output Shaft
4. Solenoid Valve
5. Electrical Supply Connection
6. Hydraulic Oil Supply
7. Sealing Rings
8. External Oil Tube
9. Double Check Valve
10. Oil Transfer Tube
11. Driven Gear
12. Idler Gear

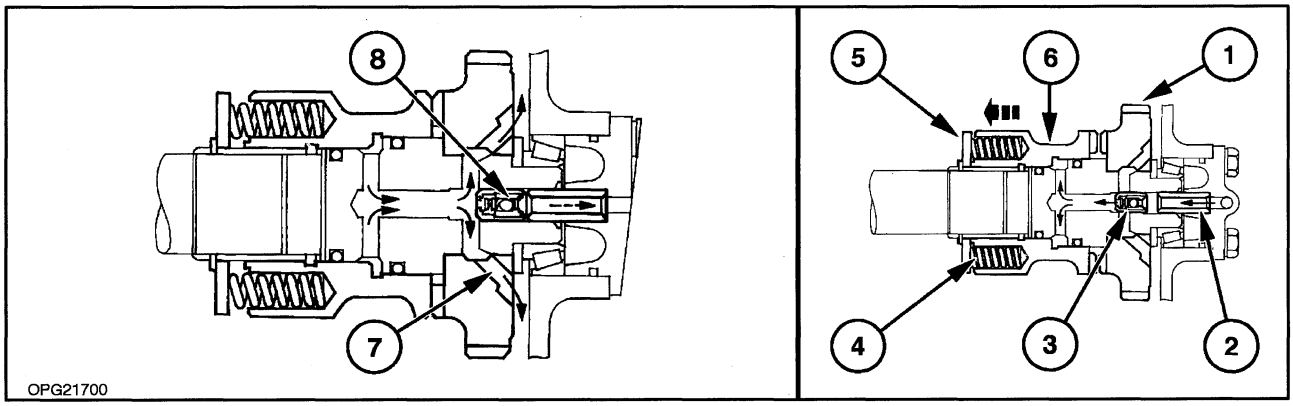

Clutch Operation - Schematic View
(Inset Showing Clutch Engagement) 213

1. Driven Gear
2. Oil Transfer Tube (inlet)
3. Check Valve (ball unseated)
4. Return Springs (4 off)
5. Spring Keeper Plate
6. Sliding Clutch
7. Oil Exhaust Route
8. Check Valve (ball seated, valve moved rearwards)

When the operator engages four wheel drive the electrical circuit to the solenoid is broken and the solenoid deactivated. Hydraulic pressure to the check valve now collapses and spring pressure forces the sliding clutch towards the driven gear. As the sliding clutch moves, discharging oil slides the whole check valve rearwards; the inner primary check ball will not allow oil to pass through the valve centre from gallery 'A', hence the whole valve slides rearwards. This movement exposes a large exhaust path, through radial drillings in both the shaft and the gear to the rear axle reservoir, permitting a rapid engagement of the clutch. A small amount of oil is also initially exhausted through the solenoid to allow the check valve to move.

TRANSFER BOX - OVERHAUL

REMOVAL

1. Park the tractor on a hard level surface and block the wheels.

2. Remove the drive shaft guard and drive shaft.

3. Remove the rear axle/transmission drain plug (2), Figure 214 and allow the oil to drain into a suitable container capable of holding 66 litres (14.5 Imp. Galls, 17.4 U.S. Galls).

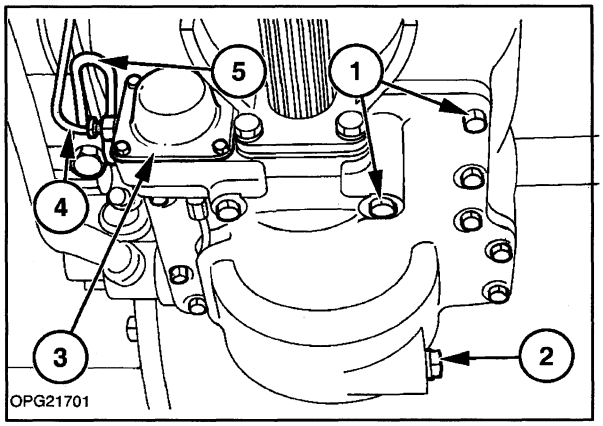

214

4. Remove the solenoid cover plate, (3) Figure 214 and disconnect the wires (2, 3 & 4) Figure 215 from the solenoid (2), Figure 215.

5. Disconnect the wire protecting tube (4) Figure 214 from the side of the transfer box casing.

6. Disconnect the hydraulic oil feed pipe (5), Figure 214 from the casing.

7. Support the transfer box with a suitable jack, remove the retaining bolts (1), Figure 214 and lower the transfer box assembly away from the tractor.

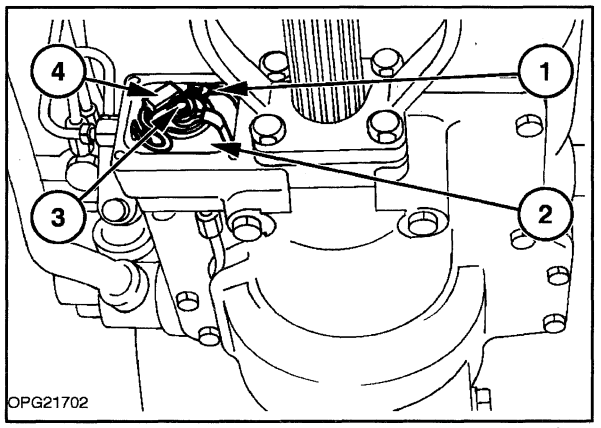

215

DISASSEMBLY

1. Remove the external oil tube linking the solenoid port to the transfer box rear end plate.

2. Remove the solenoid coil (1) and unscrew the core and valve assembly (2), Figure 216.

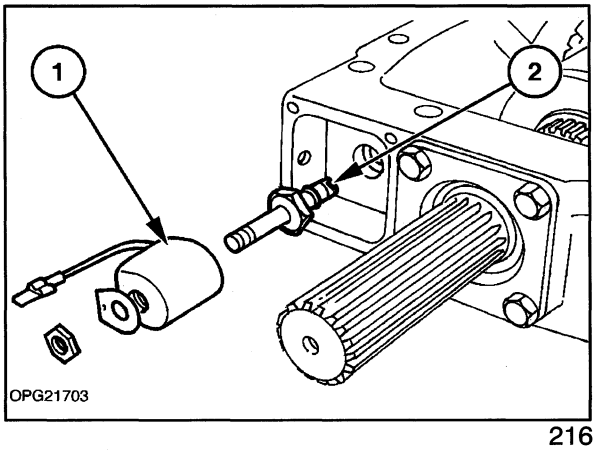

216

3. Remove the socket head bolt (3) securing the idler gear and bearing assembly (2), Figure 217. If necessary, carefully apply heat to the nut end (1) to soften and release the thread locking compound applied during manufacture.

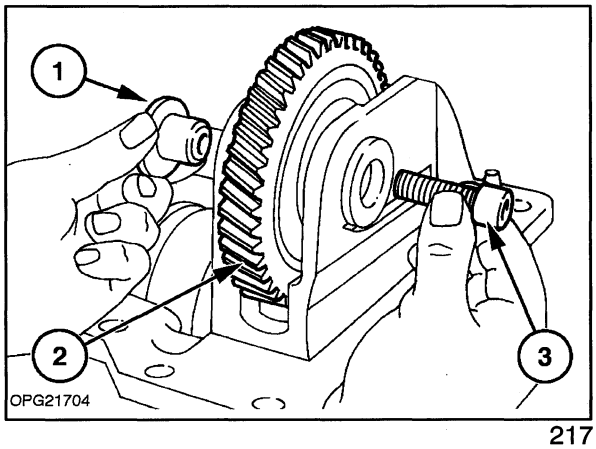

217

4. Mark the front of the idler gear (1) to aid reassembly. Drive out the central shaft (2) and lift out the gear and bearing assemblies. Keep the bearings (3), spacers and shims together for possible re-use, Figure 218.

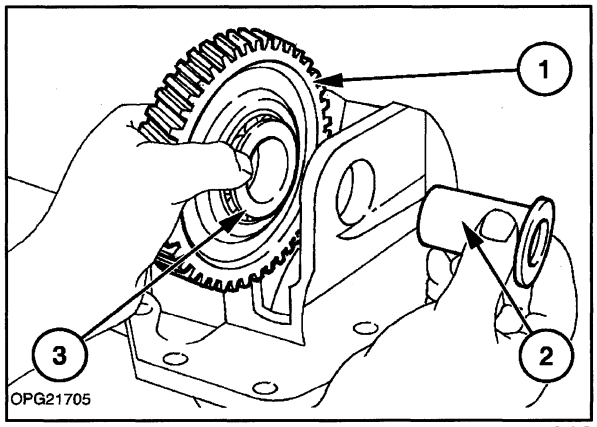

218

5. Remove the output shaft end plate (2). Collect and identify the shims (1) positioned between the plate and the bearing outer track, Figure 219.

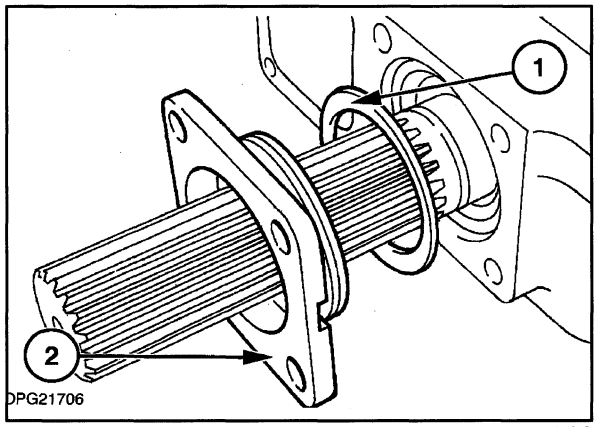

219

6. Remove the rear end plate (1), Figure 220. Remove the short oil transfer tube from the shaft (3), if this remained in the shaft.

7. Gently drive the output shaft forward and backward and remove the front and rear bearing outer tracks (2).

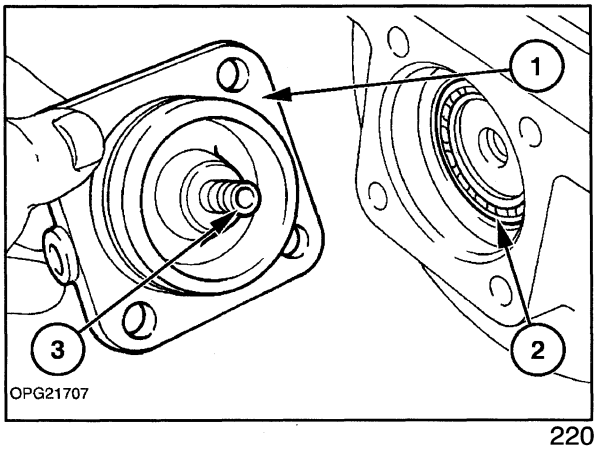

220

8. With the aid of an assistant, lever the clutch spring keeper (2) against the clutch springs (3), Figure 221, to release the load on the snap ring (1), remove the snap ring.

9. Remove the four clutch springs.

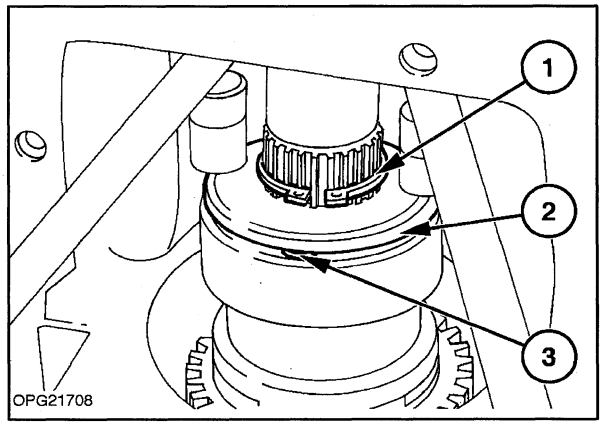

221

10. Position two suitable lengths of steel rod or tube (4) between the drive gear and the front of the casing so that the shaft (3) may be pressed through the driven gear (2), Figure 222. Remove the bearing (1).

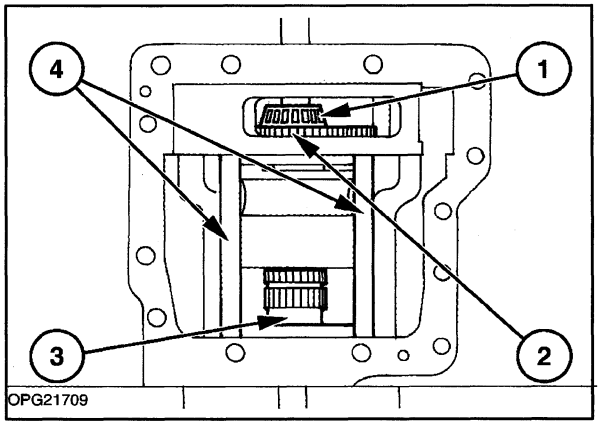

222

11. Ease the shaft forward as far as the clutch will permit and lift out the drive gear and thrust washer.

12. With the shaft still eased forward remove the front bearing (3).

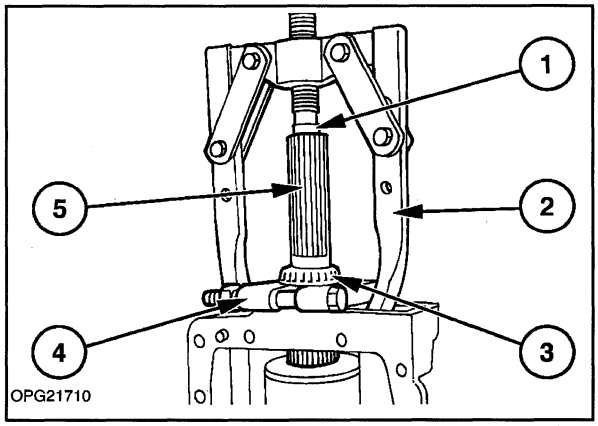

223

Removing Output Shaft Front Bearing

1. Shaft Protector
2. Tool No.FNH09516
3. Bearing
4. Tool No.FNH09190
5. Output Shaft

13. Remove the clutch snap ring, passing it along the waisted section of the shaft and over the short splined area.

14. Ease the shaft (3) rearwards and draw the clutch (2) forwards to expose the clutch rear sealing ring (1), Figure 224. Remove the sealing ring.

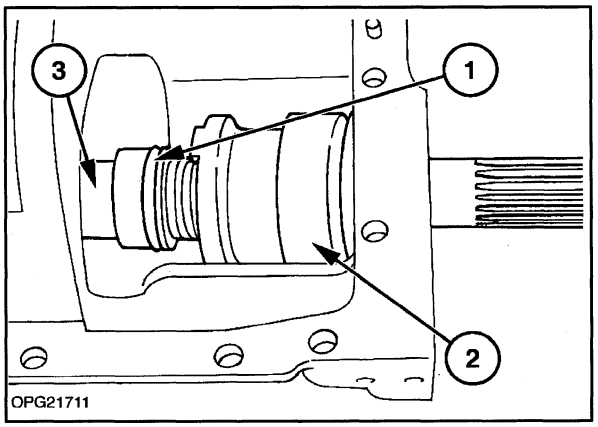

224

15. Carefully ease the shaft (3) rearwards and lift out the clutch (1) and spring keeper (2), Figure 225.

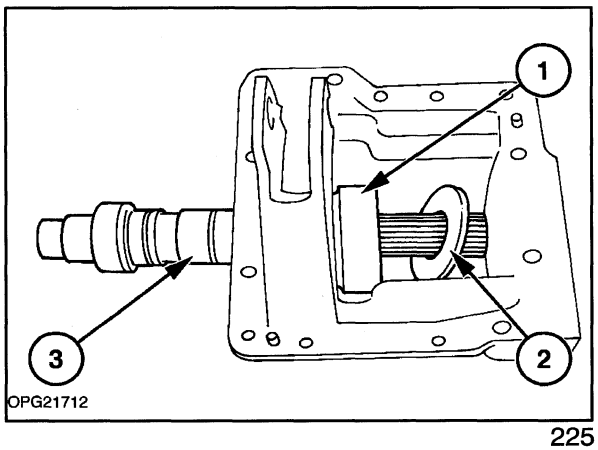

225

16. Remove the check valve (2) from the central bore (3) of the shaft (1), Figure 226. Applying an air line to the cross drilling between the clutch sealing rings will aid removal.

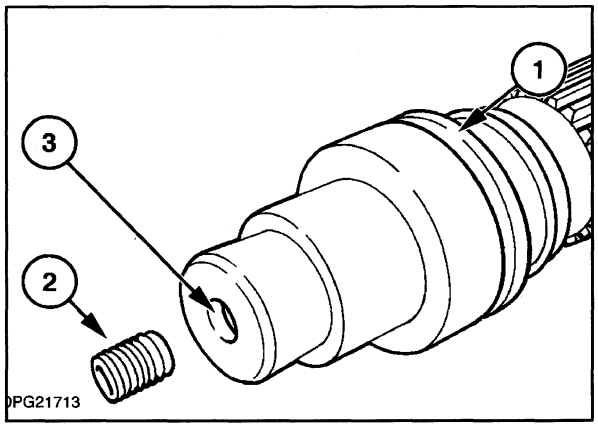

226

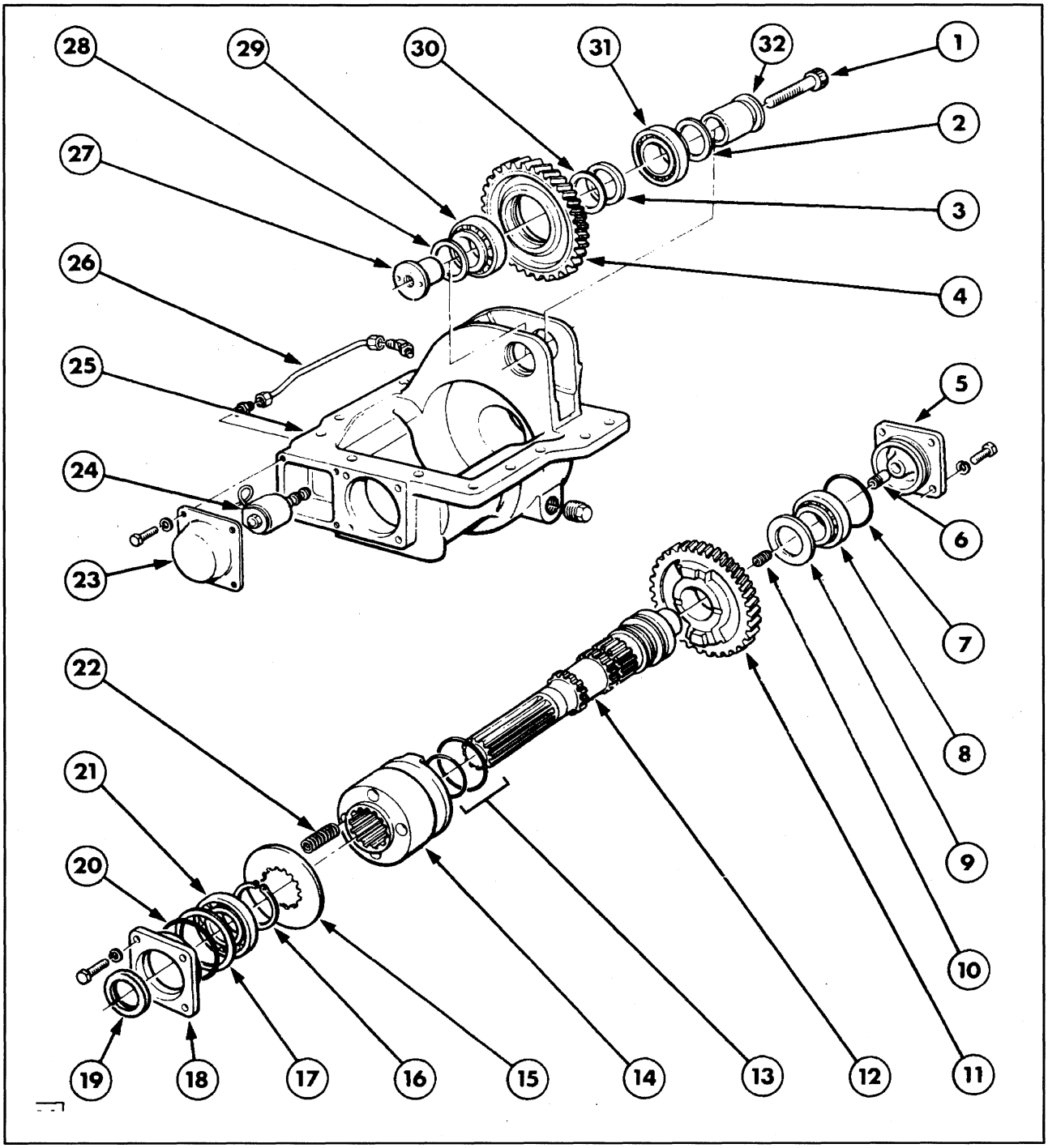

227

Transfer Box Assembly - Exploded View

1. Bolt
2. Shim
3. Spacer
4. Idler Gear
5. Rear End Plate
6. Oil Transfer Tube
7. 'O' Ring
8. Bearing
9. Thrust Washer
10. Check Valve
11. Driven Gear
12. Output Shaft
13. Sealing Rings
14. Sliding Clutch
15. Spring Keeper
16. Snap Ring
17. Shim
18. Front End Plate
19. Seal
20. 'O' Ring
21. Bearing
22. Spring - 4 off
23. Solenoid Cover
24. Solenoid/Valve
25. Casing
26. Oil Tube
27. Retainer
28. Shim
29. Bearing
30. Shim
31. Bearing
32. Shaft

INSPECTION AND REPAIR

1. Remove the 'O' ring seals from the shaft end plates (1) & (2), Figure 228 and the remaining sealing ring on the central area of the shaft.

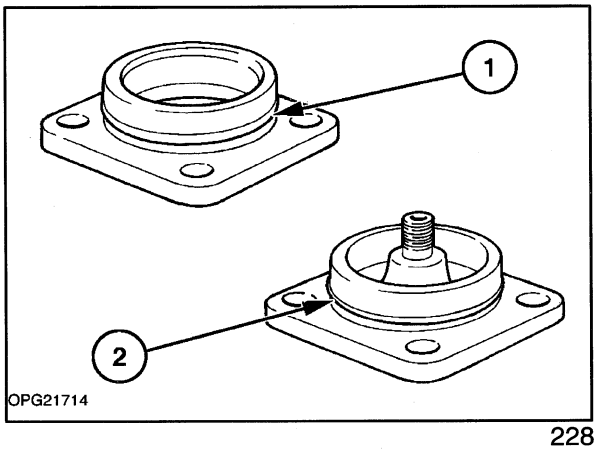

228

2. Remove and discard the felt/lip seal (2) from the output end plate (1), Figure 229. Do not install a new seal at this stage.

3. Wash all components, including the actuating valve, the oil transfer tube and the check valve from the centre of the shaft, in a suitable solvent and allow to air dry.

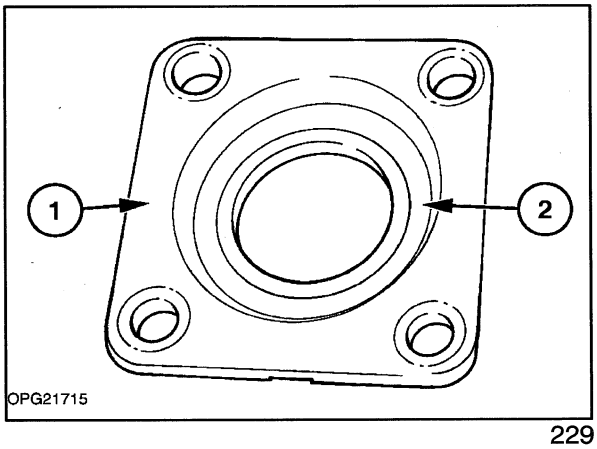

229

4. From the tractor remove the transfer box hydraulic feed pipe, Figure 214, and clean the small filter/screen positioned inside the now exposed adaptor.

5. Inspect the valve core (4) 'O' rings (1) & (3) and back up seals (2), renewing if required, Figure 230.

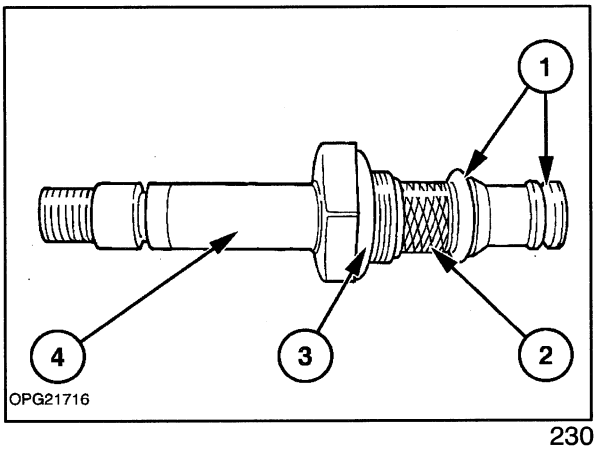

230

6. Carefully inspect the idler gear bearings. If worn or damaged, renew both bearings. Slide the outer tracks (2) from the gear, Figure 231.

7. Inspect the idler gear (1) and lower gear teeth for wear or damage. If wear or damage is found also inspect the driving gear on the rear axle pinion.

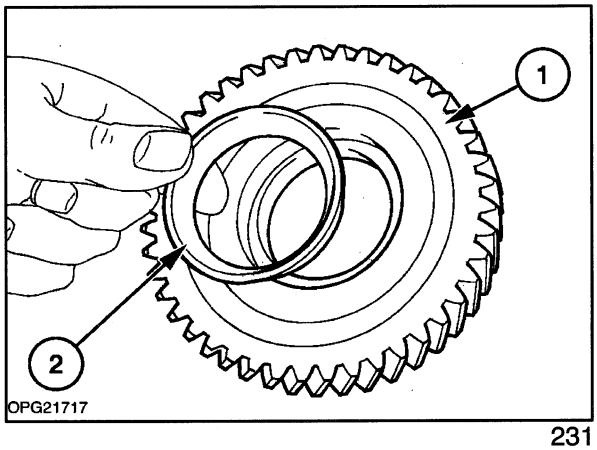

231

8. Inspect the clutch dog teeth on both the sliding clutch component (1) and the gear (2). If the clutch dogs show wear, or are not square, then both parts should be renewed, Figure 232.

9. Inspect the clutch springs for deformity and cracks, check that the spring free length is 48 mm (1.889 in).

10. Inspect the clutch and shaft splines. Ensure the clutch slides smoothly on the splines.

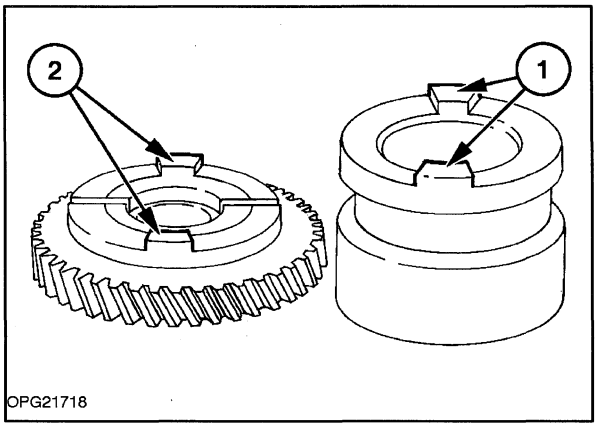

232

11. Inspect the lower shaft bearing assemblies. Renew where necessary.

12. Inspect the output shaft to driveshaft spline for damage and wear.

RE-ASSEMBLY

1. Install new 'O' ring seals on the two end plates and install a new clutch sealing ring on the smaller diameter of the shaft. Do not install the larger sealing ring until the shaft has been positioned inside the casing.

2. Coat the check valve with grease to retain in the shaft during assembly and install the valve (2) in the shaft (1). Ensure the valve is entered with the spring facing forward and the ball to the rear, Figure 233.

3. Thoroughly lubricate the inside of the clutch and lay the clutch in the casing with the spring keeper plate.

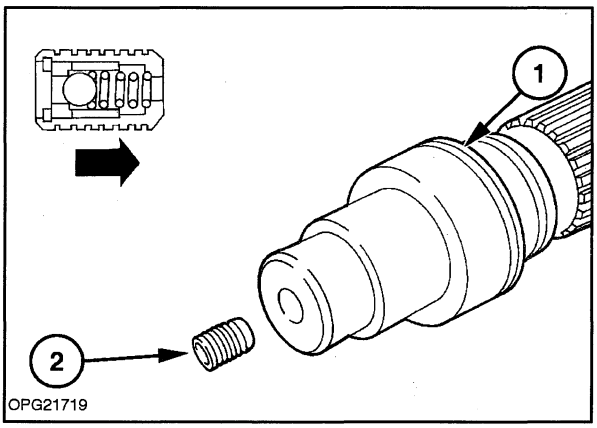

233

4. Pass the shaft (4) through the rear bearing bore and through the clutch and keeper plate (2). Before fully assembling the clutch on the shaft, install the larger diameter sealing ring (1). Lubricate both sealing rings (1) & (3), Figure 234.

5. Fully assemble the clutch onto the shaft moving the clutch to the fully closed position.

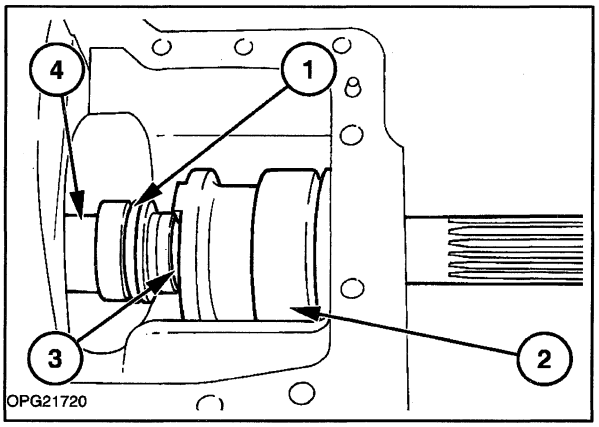

234

6. With the shaft (4) eased fully forward, assemble the driven gear (3) and thrust washer onto the shaft.

7. Using a suitable spacer (1), press the rear bearing (2) onto the shaft whilst supporting the front of the shaft, Figure 235.

8. Position the snap ring on the shaft, adjacent to the keeper plate in the waisted section.

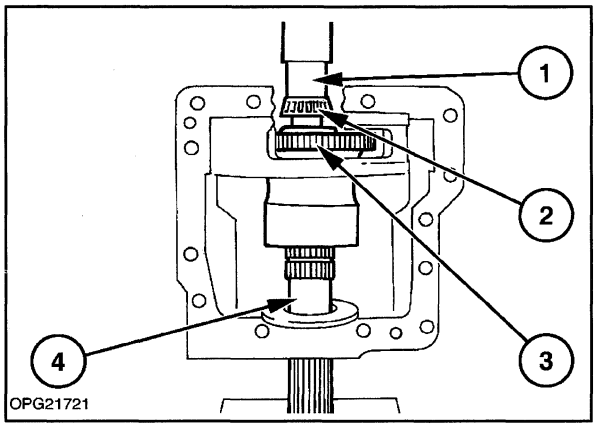

235

9. Using a suitable sleeve drive on the front bearing, ensure the sleeve only bears on the inner track.

10. Install the four clutch springs (3) and following the disassembly procedure in reverse, compress the keeper (2) and springs to install the snap ring (1). Ensure the snap ring is fully seated in its groove, Figure 236.

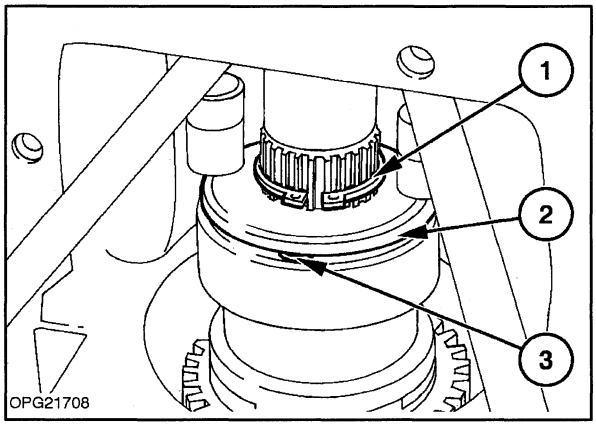

236

11. Ensure the check valve is still in position inside the shaft, slide in the bearing outer track (2) and install the rear end plate (1) with the oil transfer tube (3), Figure 237. Tighten the bolts to a torque of 38 lbf.ft (51 Nm).

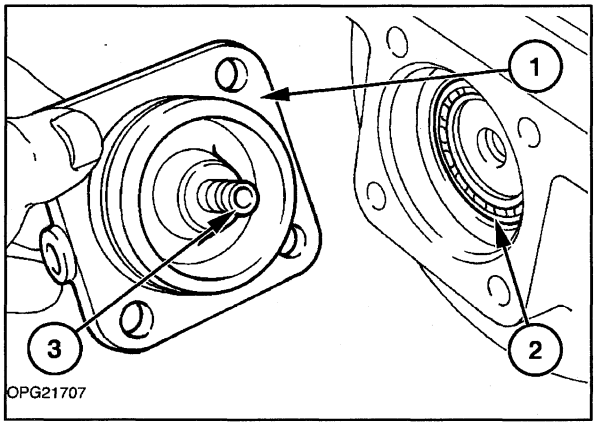

237

12. Slide in the front bearing outer track and install the front bearing retainer without its felt/lip seal and shims. Tighten the bolts to a torque of 38 lbf.ft (51 Nm).

13. Access the degree of end float by mounting a dial indicator against the clutch assembly and moving the shaft forward and backwards, Figure 238.

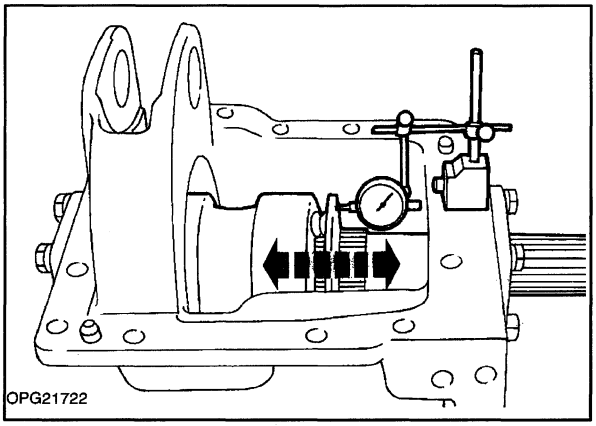

238

14. Select shims equivalent to this end float assessment and add a further 0.1 mm (0.004 in) shim to the result.

15. Remove the front bearing retainer (2), install the shim pack (1) and plate and hand tighten the retaining bolts, Figure 239.

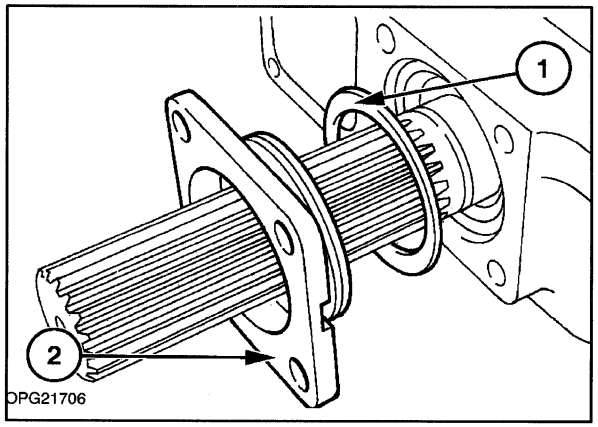

239

16. Measure the rolling resistance of the shaft within its bearing, using a length of string (1) wrapped around the output shaft and a spring balance (2). Progressively tighten the bolts to a final torque of 51 Nm (38 lbf.ft) and ensure the rolling resistance is within 18-44 Nf (4.2- 9.9 lbf). Only read the spring balance when the shaft is rotating and ensure that the string does not over wrap on the shaft, Figure 240.

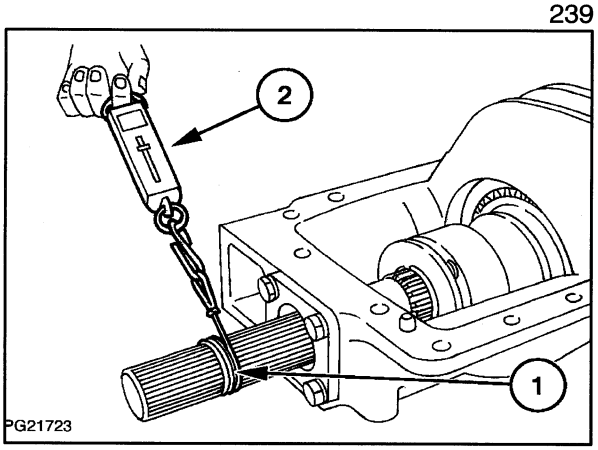

240

17. If the rolling resistance is not within the specified limits adjust the shim pack accordingly. Add shims to increase the rolling resistance, subtract shims to decrease.

18. When the correct rolling resistance is obtained, remove the end plate and install a new felt/lip seal. Carefully replace the end plate, taking care not to damage the seal and tighten the end plate retaining bolts to a torque of 38 Nm (38 lbf.ft).

19. Install the solenoid valve and oil transfer tube.

20. The idler gear can now be re-assembled, but requires the pre-load on its taper roller bearings to be calculated by measuring the rolling resistance using special Tool No. FT3169, using the following procedure:

(i) Slide the bearing outer tracks into the idler gear and assemble the inner bearings with the spacer and one 0.3 mm (0.012 in.) shim between them.

(ii) Mount this assembly on the special tool and tighten the tool bolt to a torque of 68 Nm (50 lbf.ft), Figure 241.

1. Idler Gear
2. Special Tool No. FT3169
3. Spacer
4. Shim
5. Vice Grip

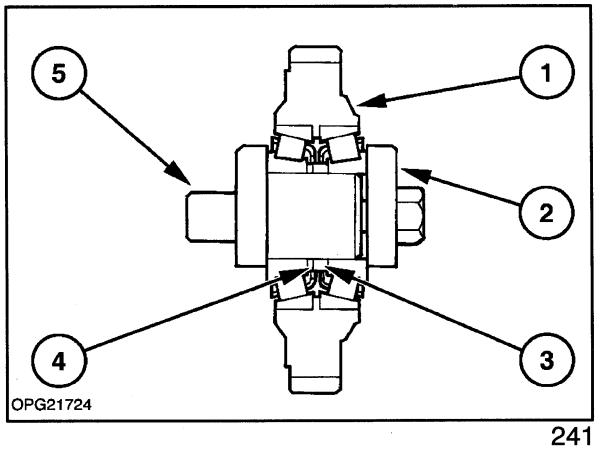

241

(iii) With the tool stock (1) mounted in a vice, measure the rolling resistance of the bearings by wrapping a length of string (2) around the gear and using a spring balance (3), Figure 242. Make the reading as the gear rotates, not at the point where rotation begins.

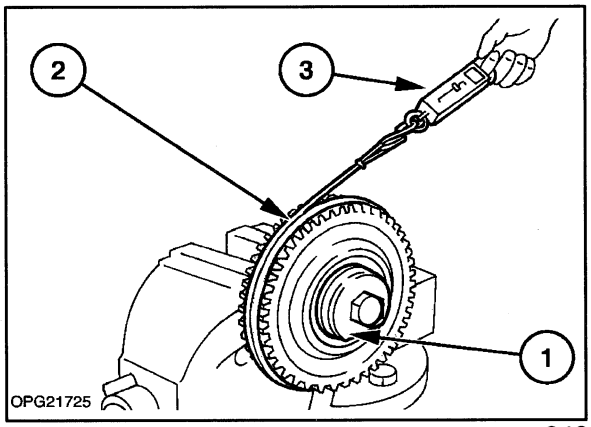

242

(iv) Increase the value of the shim placed between the bearings (1) to reduce the rolling resistance or decrease the value to increase the rolling resistance. Adjust the shims (3) until the resistance is between 4-10Nf (1.0-2.2 lbf).

(v) When the specified rolling resistance is achieved, measure the distance (2) across the bearing inner races as shown in Figure 243.

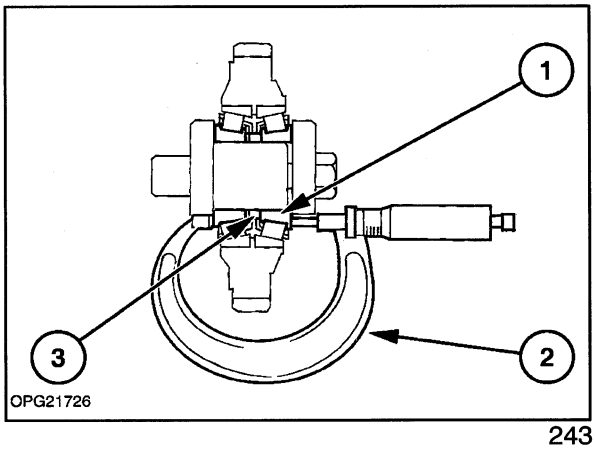

243

(vi) Measure the distance across the casing idler gear mounting lugs, Figure 244.

(vii) Subtract the bearing width measurement from the casing lug measurement and make up a shim pack equal to this result. Divide the resultant value by two where possible and place half the value of shims on each side of the bearing assemblies. It is not essential that these shims be exactly equal as long as the sum total of the two sets of shims equals the required amount.

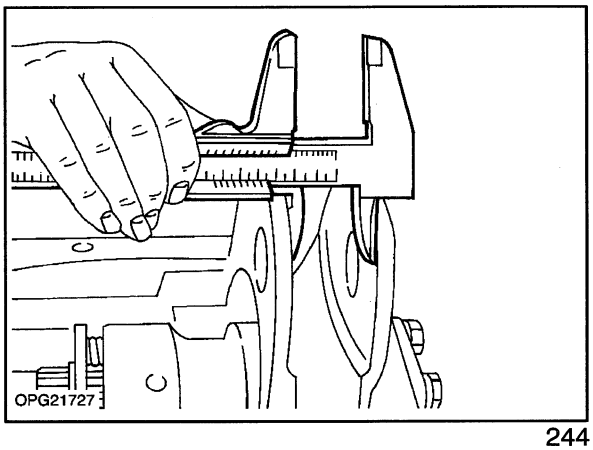

244

Example:
Width of bearing races, Figure 243,
= 3.75 mm

Width of transfer case lugs, Figure 244,
= 3.95 mm

3.95 - 3.75 = 0.2 mm

Therefore two shims are required, each of 0.1 mm. Add one shim to each side of the bearing.

21. Remove the idler gear from the special tool. Lightly lubricate and assemble the gear (1), bearings, spacer (4) and predetermined shim (2), (3) & (6) values to the transfer casing (5) as shown in Figure 245. Apply a suitable thread locking compound, New Holland Part Number 82995773 and tighten the idler gear retaining bolt to a torque value of 80 Nm (59 lbf.ft).

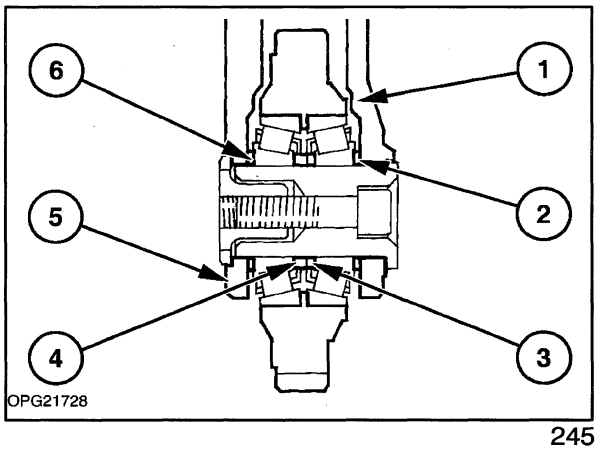

245

INSTALLATION

1. Installation of the transfer box assembly follows the removal procedure in reverse.

IMPORTANT: *Use only the approved gasket between the transfer box and rear axle housing. Any variation in thickness and material from that specified may result in excessive gear noise or premature gear wear.*

2. Tighten the transfer box retaining bolts to a torque of 66 Nm (49 lbf.ft). Tighten the driveshaft bolts to a torque of 57 Nm (42 lbf.ft). Apply thread locking compound, New Holland Part Number 82995773 to the drive shaft to axle drive flange coupling bolts.

3. Fill the rear axle with the correct quantity and grade of oil.

MECHANICAL REAR WHEEL DRIVE

Rear Axle

SPECIFICATIONS, TIGHTENING TORQUES AND SPECIAL TOOLS

SPECIFICATIONS

MODEL (Transmission)	**8x2/16x4**	**12x12/24x24**	**16x16**
Rear Axle General :			
Planetary Gears	3	3	3
Ratios Spiral Bevel	5.286	5.625	
Planetary	4.5	6.0	
Overall	23.786	33.75	
Pitch Dia, Spiral Bevel	13.13 in (333.5mm)		
Axle Shaft Dia	2.7 in (68.58mm)		
Differential Lock	Mechanical	Electro Hydraulic	
Draw Bar Pull lbs kgms	9000 (4082)	9500 (4309)	9500 (4309)
Load Capacity lbs kgms	12000 (5443)	13800 (6260)	13800 (6260)
Oil Specification	Ambra Multi-G		
Oil Quantity			
Imp. Gallons	14.5	12.5	13.3
U.S. Gallons	17.4	15.0	16.0
Litres	66.0	56.8	60.6

Axle Shaft Pre-Load

Axle Shaft Rolling Torque using a torque wrench 8.03-20.8 lbf (11.6-28.2 Nm)

Table 1:

RESULTANT FIGURE	SPACER TO BE INSTALLED
0.049-0.052 in (1.24-1.32 mm)	0.045 in (1.14mm)
0.053-0.056 in (1.35-1.42 mm)	0.049 in (1.24 mm)
0.057-0.060 in (1.45-1.52 mm)	0.053 in (1.35 mm)
0.061-0.064 in (1.55-1.63 mm)	0.057 in (1.45 mm)
0.065-0.068 in (1.65-1.73 mm)	0.061 in (1.55 mm)
0.069-0.072 in (1.75-1.83 mm)	0.065 in (1.65 mm)
0.073-0.076 in (1.85-1.93 mm)	0.069 in (1.75 mm)
0.077-0.080 in (1.96-2.03 mm)	0.073 in (1.85 mm)
0.081-0.084 in (2.06-2.13 mm)	0.077 in (1.96 mm)
0.085-0.088 in (2.16-2.24 mm)	0.081 in (2.06 mm)
0.089-0.092 in (2.26-2.34 mm)	0.085 in (2.16 mm)

Differential Bearing Pre-Load

Differential Bearing Rolling Torque using a Spring Pull Gauge: 15-67 lbf. (7-30 Kgf.)

Table 2:

GAP MEASURED	SHIM TO BE INSTALLED
0.024-0.029 in (0.61-0.74 mm)	0.038-0.040 in (0.97-1.02 mm)
0.030-0.035 in (0.76-0.87 mm)	0.044-0.046 in (1.12-1.17 mm)
0.036-0.041 in (0.91-1.04 mm)	0.050-0.052 in (1.27-1.32 mm)
0.042-0.047 in (1.07-1.19 mm)	0.056-0.058 in (1.42-1.47 mm)
0.048-0.053 in (1.22-1.35 mm)	0.062-0.064 in (1.58-1.63 mm)
0.054-0.059 in (1.37-1.50 mm)	0.068-0.070 in (1.73-1.78 mm)
0.060-0.065 (1.50-1.63 mm)	0.074-0.076 in (1.88-1.93 mm)
0.066-0.071 (1.65-1.78 mm)	0.080-0.082 in (2.03-2.08 mm)

Drive Pinion Pre-load (Rolling Torque)

Table 3:

Using Gauge, Tool No. FT.4602 10-17 lb.in (1.1-1.9 Nm)
Using a Spring Pull Gauge 13-23 lbf. (5.9-10.5 Kgf.)

TIGHTENING TORQUES

Components	lbf.ft	Nm
Axle Shaft Housing Retaining Bolts	130-190	176-258
Axle Shaft Retaining Bolt	250-400	339-542
Differential Ring Gear Retaining Nuts	85	115
Differential Case Retaining Bolts	68-92	92-125
Differential Lock Fork Pivot Shaft Retaining Bolts	42-56	57-76
Differential Lock Hanger Retaining Bolts	42-56	57-76
Inner Brake Housing Retaining Bolts	65-89	88-121
Drive Pinion Bearing Retainer Bolts	100-125	136-170
Ring Gear Thrust Block	27-37	37-50
Wheel Nuts (Disc to Hub)		
Manual Adjust Wheels	288	390
Power Adjust Wheels	525	712

SPECIAL TOOLS

DESCRIPTION	V.L. CHURCHILL LTD TOOLS	NUDAY TOOLS	FNH
Shaft Protectors	625A	9212	FNH09212
Step Plates	630S	9210	FNH09210
Step Plate Adaptor	630T	9211	FNH09211
Taper Base	370	-	-
Slave Ring	CT.9056	-	-
Planetary Ring Gear Remover/Replacer	FT.4500 (SW.6)	2122 (SW.6-48) 2123 (SW.6-56)	FNH02122 FNH02123
Differential Bearing Pre-Load Gauge	FT.4501 (SW.7)	2141 (SW.505)	FNH02141
Drive Pinion Pre-Load Gauge	T.4062	(Pull Scale)	-
Drive Pinion Pre-Load Gauge Adaptor	T.4062A		-
Puller Legs	930B	9521	FNH09521
Puller	938	9506	FNH09506
Internal/External Puller	943	9507	FNH09507
Slide Hammer	943S	9567	FNH09567
Pulling Attachments:			
Small	951	9190	FNH09190
Large	952	9526	FNH09526
Pullers:			
Small	1001	9196	FNH09196
Medium	1002	9198	FNH09198
Large	1003	9516	FNH09516
Bushing Remover	818	-	FNH09514

FAULT FINDING

PROBLEM	POSSIBLE CAUSE	REMEDY
1. Rear Axle Noisy	1. Lack of oil	1. Top up as required
	2. Incorrect oil specification	2. Drain and refill with oil of correct specification
	3. Worn axle bearings	3. Disassemble and inspect bearings
2. No Drive **(NOTE:** *Refer also to 'Clutch Systems' fault finding.*	1. Operate the differential lock, if the tractor drives this indicates a failure within an axle shaft housing assembly. If the tractor does not drive the fault may lie in the differential unit. Ensure the Clutch and transmission systems are not at fault.	

PROBLEM	POSSIBLE CAUSE	REMEDY
3. Differential Lock not engaging (mechanically engaged)	1. External linkage damaged or broken	1. Replace/repair as required
	2. Internal linkage, cross shaft rod, fork or pivot shaft damaged/broken	2. Remove the HPL top cover and inspect
	3. Damaged or broken teeth on differential lock adaptor or coupling	3. Remove differential and inspect differential lock assembly
4. Differential Lock not disengaging (mechanically engaged)	1. Spring broken between adaptor and coupling	1. Remove differential and replace spring
	2. Teeth of adaptor or coupling damaged/burred	2. Remove differential and replace damaged parts
5. Differential Lock not engaging (electro-hydraulic)	1. Fuse 15 blown	1. Replace fuse
	2. Faulty Relays, G or A.	2. Replace faulty relay
	3. Brake switch activated	3. Ensure brake switches are correctly adjusted and operating correctly
	4. Rocker switch faulty	4. Replace switch
	5. Solenoid faulty	5. Replace solenoid
	6. Faulty hydraulic oil supply to solenoid assembly	6. Check low pressure hydraulic circuit. Refer to Hydraulic Section
	7. Wiring fault	7. Locate and repair faulty wiring
	8. Internal linkage damaged/broken	8. Remove HPL top cover and inspect
	9. Differential lock coupling / adaptor gear teeth damaged	9. Remove differential and replace damaged parts
6. Differential Lock not disengaging (electro-hydraulic)	1. Faulty operating switch (failed in 'ON' position)	1. Replace switch
	2. Solenoid Faulty (Seized)	2. Inspect solenoid, repair or replace as required
	3. Faulty wiring	3. Locate and repair fault in wiring
	4. Spring broken between coupling and adaptor	4. Remove differential and replace spring
	5. Damaged or broken coupling and adaptor gear teeth	5. Remove differential and replace damaged components
	6. Faulty brake pedal switch	6. Ensure switches are correctly adjusted and operating correctly

DESCRIPTION AND OPERATION

There are two basic types of rear axles. An 8 × 2/16 × 4 rear axle which has mechanically operated brakes and a mechanical differential lock. A 12 × 12 and 16 × 16 rear axle which has hydraulically operated brakes, hydraulic/electrically operated differential lock and three planetary gears.

The rear axle assembly, attached to the rear of the front transmission, connects the drive from the engine and gearbox to the rear wheels. Housed within the rear axle assembly are the following components:-

- Main Drive Pinion and Differential Ring Gear
- Differential
- Differential Lock Assembly
- Brakes
- Final Reduction Gears
- Axle Half Shafts
- P.T.O. Components
- Transmission Handbrake
- Hydraulic Pumps, variable displacement or Tandem Gear Pumps.

The drive from the transmission output shaft is transmitted to the spiral bevel pinion by the drive coupling. The pinion is located in the front of the rear axle housing by two pre - loaded, opposed tapered roller bearings, and meshes with the differential ring gear.

The ring gear is riveted to the differential case assembly which is supported between taper roller bearings mounted in the rear axle housings.

NOTE: *In service the ring gear rivets are replaced by nuts and bolts.*

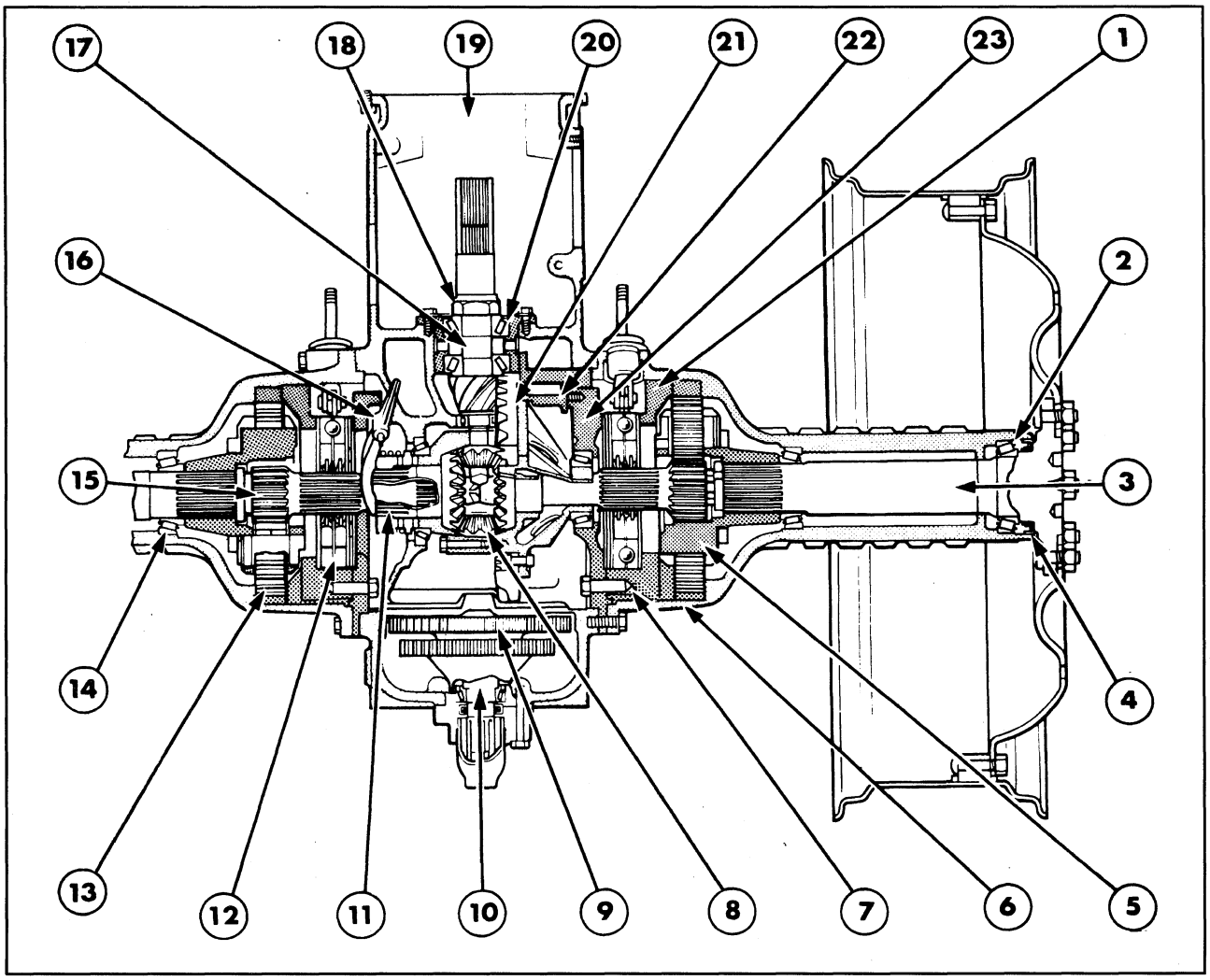

Rear Axle Assembly 246

1. Outer Brake Housing
2. Axle Housing Outer Bearing
3. Axle Shaft
4. Axle Shaft Oil Seal
5. Planet Gear Carrier
6. Axle Housing
7. Brake Torque Pin
8. Differential Assembly
9. I.P.T.O Drive and Driven Gears
10. I.P.T.O Rear Shaft
11. Differential Lock Assembly
12. Rear Wheel Brake Assembly
13. Planet Gears
14. Axle Housing Inner Bearing
15. Sun Gear
16. Differential Lock Fork
17. Drive Pinion
18. Drive Pinion Locknut
19. Rear Axle Housing
20. Pinion Bearing Retainer
21. Differential Ring Gear
22. Thrust Block
23. Inner Brake Housing

A thrust block is fitted to the heavy duty axle to prevent the ring gear from flexing due to pre loading from the drive pinion. The casting of the block also ensures an adequate quantity of lubricating oil flows to the drive pinion bearings.

The axle shaft housings operate with higher oil levels than the centre housing. The left hand side of the centre housing and the right hand axle shaft housing both have restrictions to maintain the increased levels, Figure 247 and Figure 248.

The differential case assembly forms two halves which are bolted together to enclose the differential spider and side gears.

The drive from the pinion is transmitted via the ring gear and differential case assembly to the arms of the spider. Mounted on the spider are pinion gears which are in constant mesh with the two side gears.

An intermediate shaft is splined into each side gear and the brake assemblies are splined onto these shafts.

The outer end of each intermediate shaft forms the sun gear of an epicyclic final reduction gear set mounted within each axle housing.

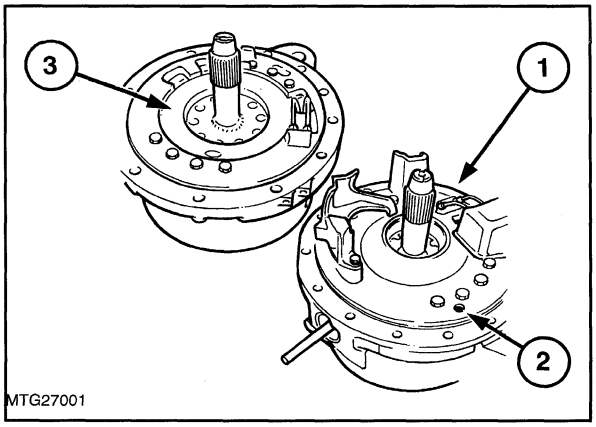

Left and Right Hand Axle Housings 247

1. Right Hand Axle Housing
2. Oil Restrictor
3. Left Hand Axle Housing

The drive to the wheels is transmitted from the intermediate shaft to the outer shaft via the reduction gear set.

The inner ends of the outer axle shaft are splined into the planetary gear carrier. The axle shafts are supported by a taper roller bearing mounted in each axle housing.

The oil provided for the I.P.T.O. and hydraulic systems is also used for lubricating the rear axle components. The differential and ring gear assembly is partially immersed in the oil to splash feed the bearings and bushings.

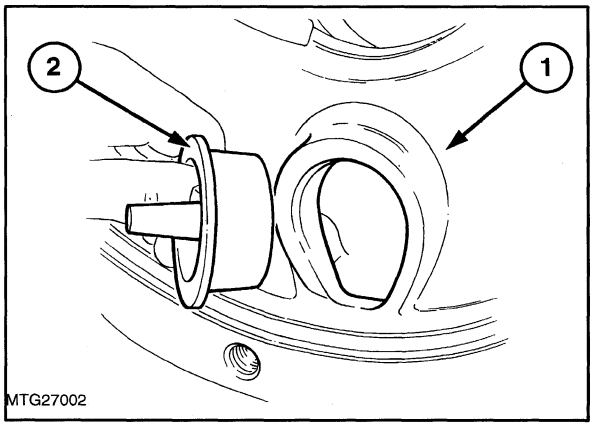

Left Hand Oil Restrictor 248

1. Rear Axle Centre Housing
2. Plastic Plug

DIFFERENTIAL LOCK

When a tractor is fitted with a conventional differential assembly is working in soft soil, and one wheel starts to slip, all the drive is then transmitted to that wheel and traction ceases.

To overcome this slippage a differential lock is fitted to all models.

The differential lock mounted to the left hand side of the crown wheel can be engaged to connect one of the side gears to the differential case assembly. This action locks the differential assembly together and provides a direct drive to both wheels.

The lock assembly consists of a sliding coupling (3), an adaptor (2) and a fork and lever assembly. The sliding coupling is splined onto the protruding end of the side gear.

The adaptor is positioned between the coupling and the left hand differential case (1). A spring (4) positioned between the coupling and the adaptor ensures the coupling only engages with the adaptor when required and the dog teeth on the adaptor and the differential case are not permanently engaged.

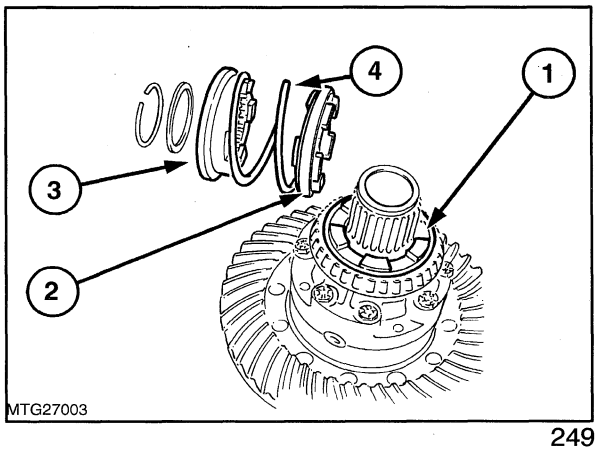

249

OPERATION

The fork and lever assembly is operated by either a spring controlled foot operated linkage (mechanically engaged), or an electro hydraulic system operated by a rocker switch mounted on the right hand panel.

Mechanical Engagement/Disengagement

When actuated the fork forces the dog teeth of the coupling to mesh with the adaptor and thereby lock the side gear to the differential case. After the differential lock, of the mechanically engaged system; has been engaged, the foot pedal (1) can be released.

The mechanically operated differential lock will automatically disengage when the spring pressure overcomes the side forces acting on the coupling teeth. This situation will only occur when the torque to both wheels is equal.

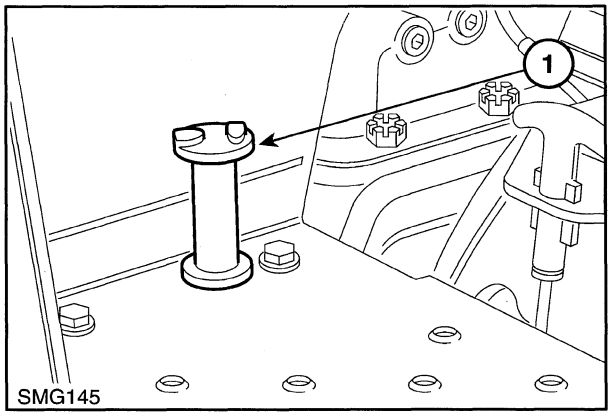

250

Electrical Operation

NOTE: *The rear axle differential lock engagement is controlled by a rocker switch to the right of the operator's seat. If your tractor has a cab, refer to Figure 251. On tractors without cab, the switch is incorporated in a panel on the right-hand fender - see Figure 252.*

An electro-hydraulic, self-holding differential lock is installed in the rear axle and may be operated in the manual or automatic modes. The rocker switch (1) has three positions, the central position being off.

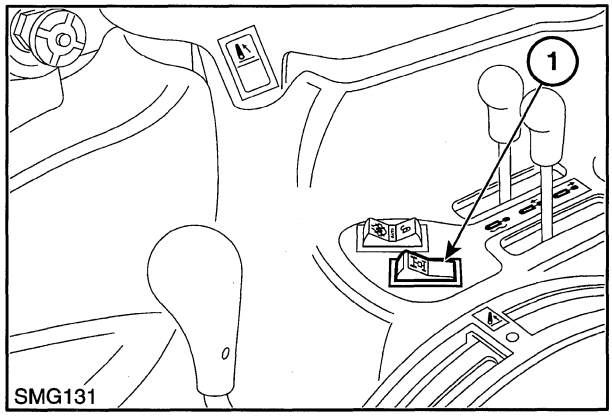

251

WARNING: *Avoid using the differential lock at speeds above 8 km/h (5 MPH) or at any time when turning the tractor. When engaged, the differential lock will make steering the tractor very difficult.*

IMPORTANT: *If a rear wheel spins at speed, reduce engine speed before engaging the differential lock, to avoid shock loads to the transmission.*

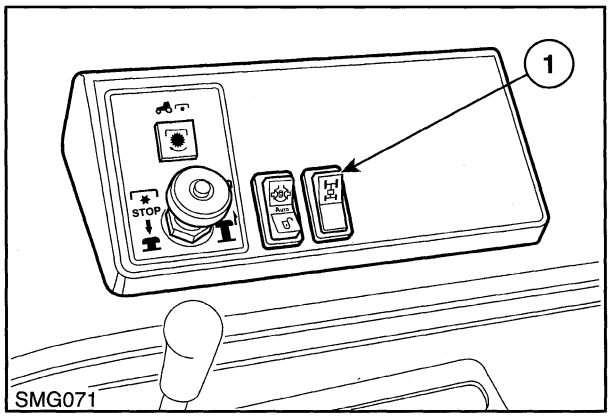

252

Operating in Manual Mode

In conditions creating wheel slip press the front (yellow) part of the switch (1) Figure 251 or 252 fully in to lock the rear wheels together. The differential lock will be engaged, as indicated by the amber warning light on the instrument panel.

Disengagement will occur when one or both brake pedals are applied or if the rocker switch is returned to the central position. The lock will remain engaged until traction at the rear wheels equalises. The warning light on the instrument panel will go out when the differential lock has disengaged.

Operating in Automatic Mode

Press the rear part of the switch (1) Figure 251 or 252 fully in to lock the rear wheels together. The amber warning light on the instrument panel will illuminate when the differential lock is engaged.

Disengagement will occur as follows:

Fast raise switch (2) activated (to raise the rear 3-point linkage	temporary disengagement (will re-engage when 3-point linkage is lowered)

NOTE: *If the automatic mode is selected with the fast raise switch already in the raised position, the differential locks will engage but disengage when the fast raise switch is subsequently used to raise the 3-point linkage.*

Either brake pedal applied (single pedal Braking	temporary disengagement
Return the rocker switch to the central position	differential lock will disengage

NOTE: *The lock will remain engaged until traction at the rear wheels equalises.*

FINAL REDUCTION GEAR ASSEMBLY (Planetary Gear Assembly)

To increase the torque transmitted to the rear wheels, an epicyclic reduction gear assembly is located within each of the rear axle housings. The outer end of each intermediate shaft acts as the planetary sun gear around which are located three planet gears. The planet gears are mounted within a carrier which is splined to the rear axle shaft.

The planet gears mesh with a ring gear which is mounted within the axle housing. As the intermediate shaft gear revolves, the planet gears are forced to rotate and roll around the inside of the fixed ring gear. This action causes the planet gear carrier to rotate at a reduced speed and transmit increased torque to the rear axle and wheels.

REAR AXLE HALF SHAFT ASSEMBLY OVERHAUL

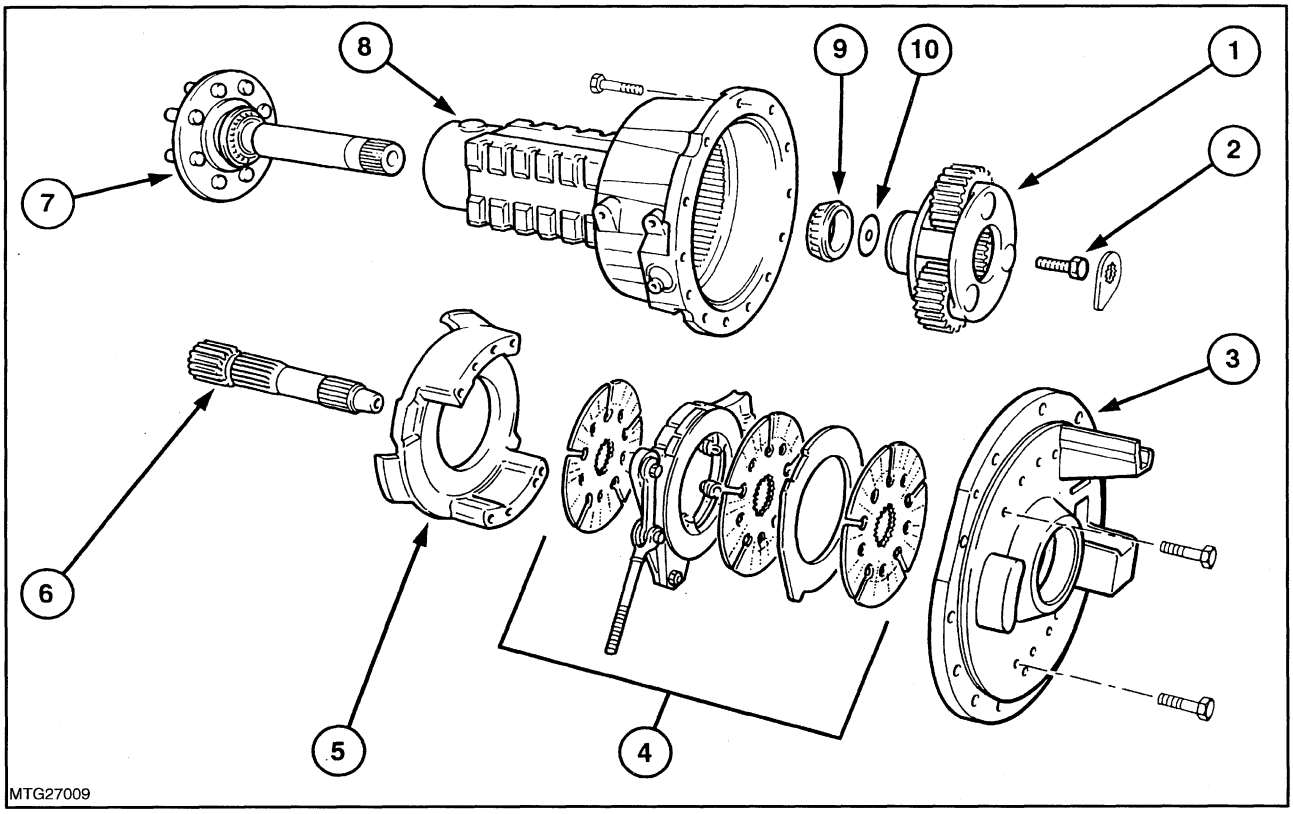

Rear Axle Half Shaft Assembly 253

1. Planetary Reduction Gears and Carrier
2. Carrier Retaining Bolt and Lock Tab
3. Inner Brake Housing
4. Thrust Block
5. Brake Discs and Actuator
6. Outer Brake Housing
7. Sun Gear and Shaft
8. Axle Shaft
9. Axle Shaft Housing
10. Axle Shaft Bearing
11. Shim

Operations or Repairs that can be performed with the left hand half axle removed.

Differential Operating Fork Overhaul

Left Hand Brake Plates Overhaul

Sun Gear Assembly Overhaul

Half Shaft Assembly Overhaul

Operations or Repairs that can be performed with the right hand half axle removed.

Right Hand Brake Plates Overhaul

Sun Gear Assembly Overhaul

Half Shaft Assembly Overhaul

Crown Wheel and Pinion Assembly Overhaul

Differential Lock Assembly Overhaul

REMOVAL

IMPORTANT: *Prior to removal ensure vehicle is safely supported, the front wheels chocked to prevent movement and the handbrake is released.*

1. Drain the rear axle oil from the centre housing and disconnect the hydraulic lift rods, Automatic pick up hitch tie rods, handbrake cables and either the hydraulic brake pipes or footbrake linkage, depending on axle type.
2. Remove the rear wheels, replacing the nuts onto the studs to prevent damage to the stud threads during overhaul.

3. Support the rear of the cab or platform (1) and remove the cab or platform (2) to the right or left of the vehicle, away from the half shaft to be removed, Figure 254.

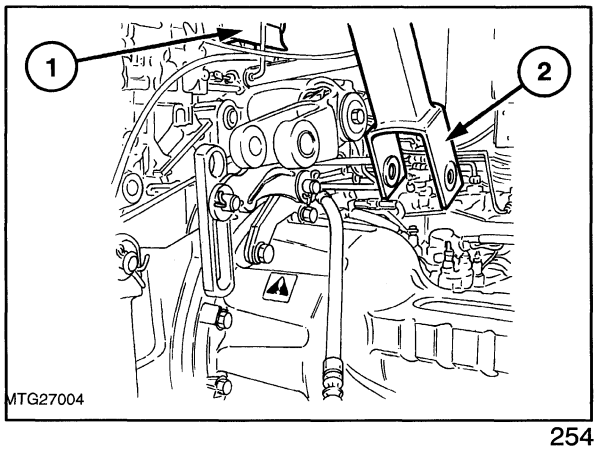

254

4. Support the axle shaft housing (1) on a suitable trolley jack (2). Remove the securing bolts and withdraw the axle housing from the tractor, Figure 255.

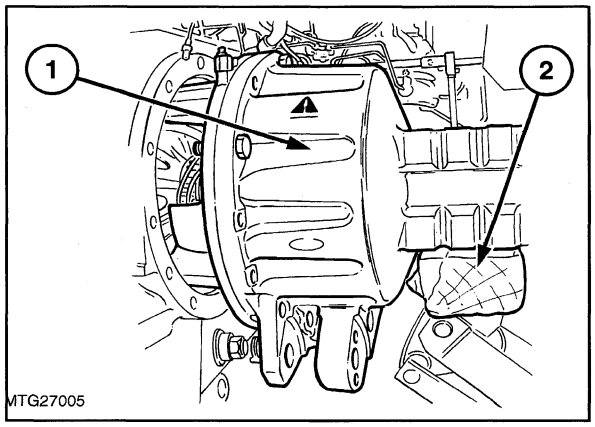

255

DISASSEMBLY

1. Remove the large 'O' ring located in the inner end of the axle housing.
2. If the right hand housing has been removed, withdraw the differential assembly (1) to prevent damage during the axle overhaul, Figure 256.

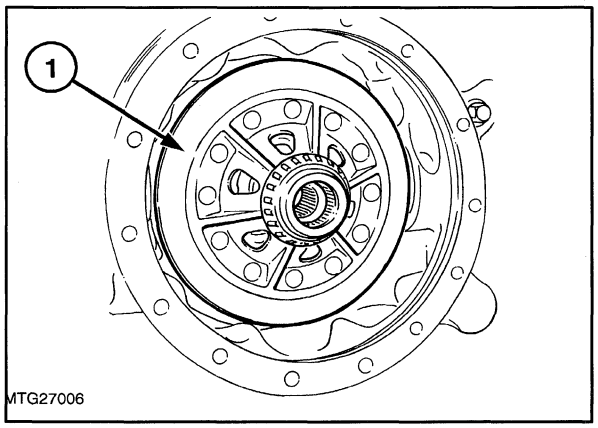

256

3. Remove the two hydraulic brake tubes from the inner housing and the bolts securing the inner brake using to the axle housing then withdraw the inner brake housing from the axle housing.

4. Remove the brake friction discs and actuating disc assembly. Lift the intermediate sun gear shaft out of the axle then withdraw the outer brake housing.

5. Remove the axle shaft retaining bolt lock tab and retaining bolt.

NOTE: *It may be necessary to heat the locking tab to melt the sealant used during production.*

6. Lift and withdraw the planet gear and carrier assembly (2) using puller, Tool No. 943 (1), expanded under the planet gears. Collect the shim from underneath the carrier assembly.

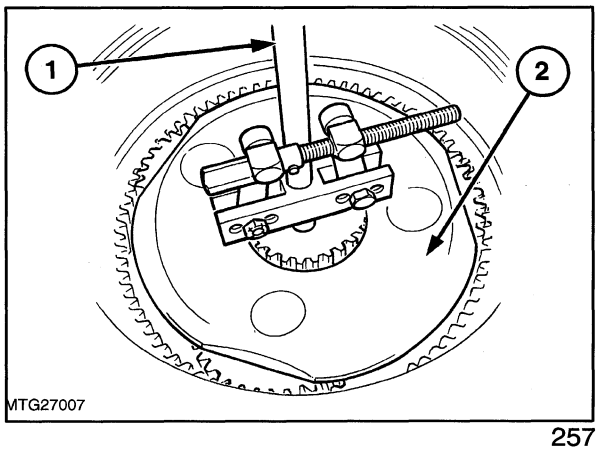

257

WARNING: *Ensure when lifting the planetary gear and carrier assembly from the axle shaft housing that the puller is correctly positioned. Do not attempt to remove or replace the assembly without the specified puller as personal injury may result .*

7. Remove the axle shaft from the housing. The inner bearing of 12×12, 24×24 and 16×16 models is a press fit onto the axle shaft and must be pressed out. Fabricate a suitable tool (1), as shown in Figure 259.

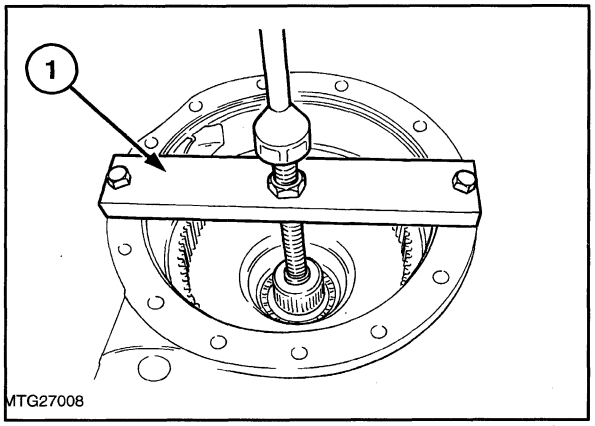

258

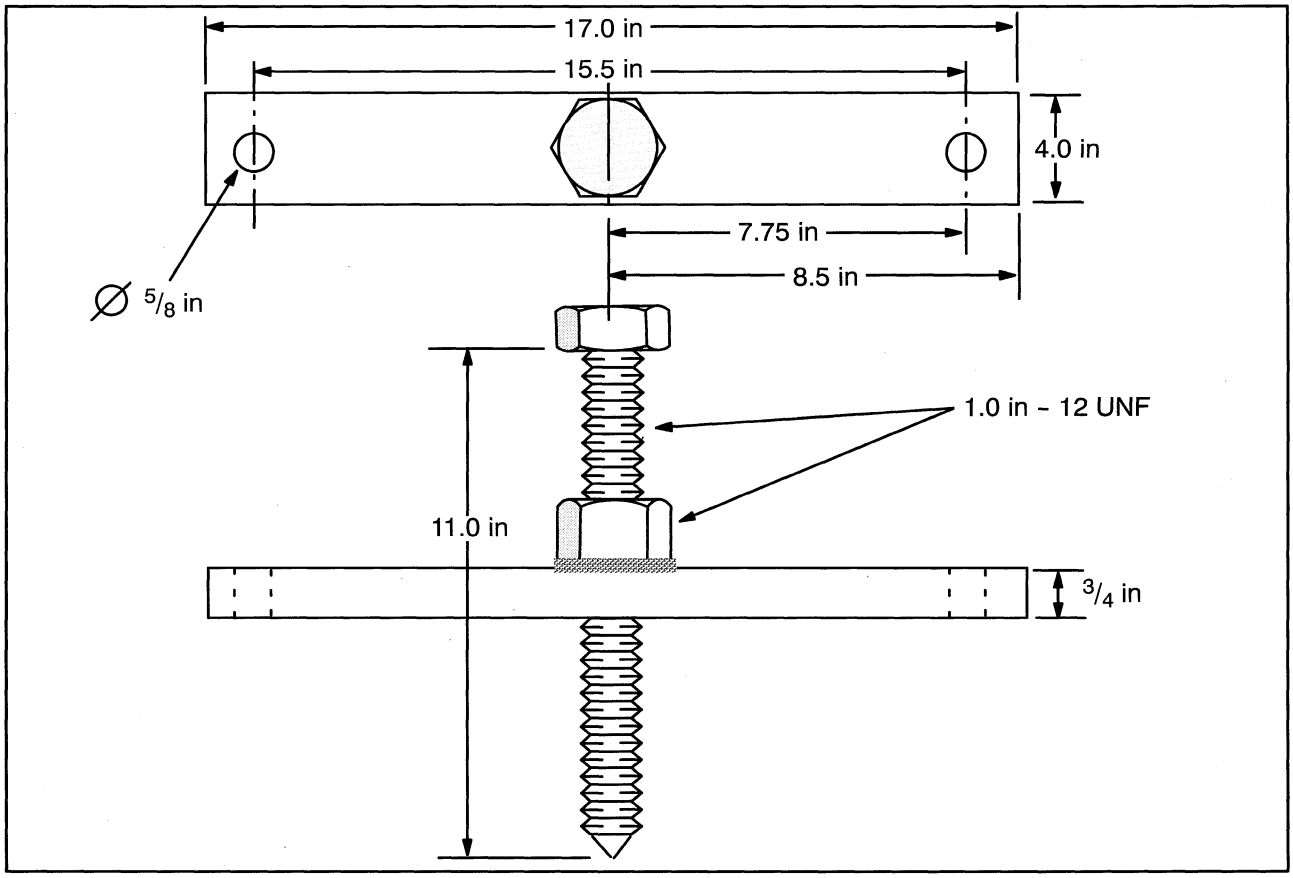

Axle Shaft Removal Tool 259

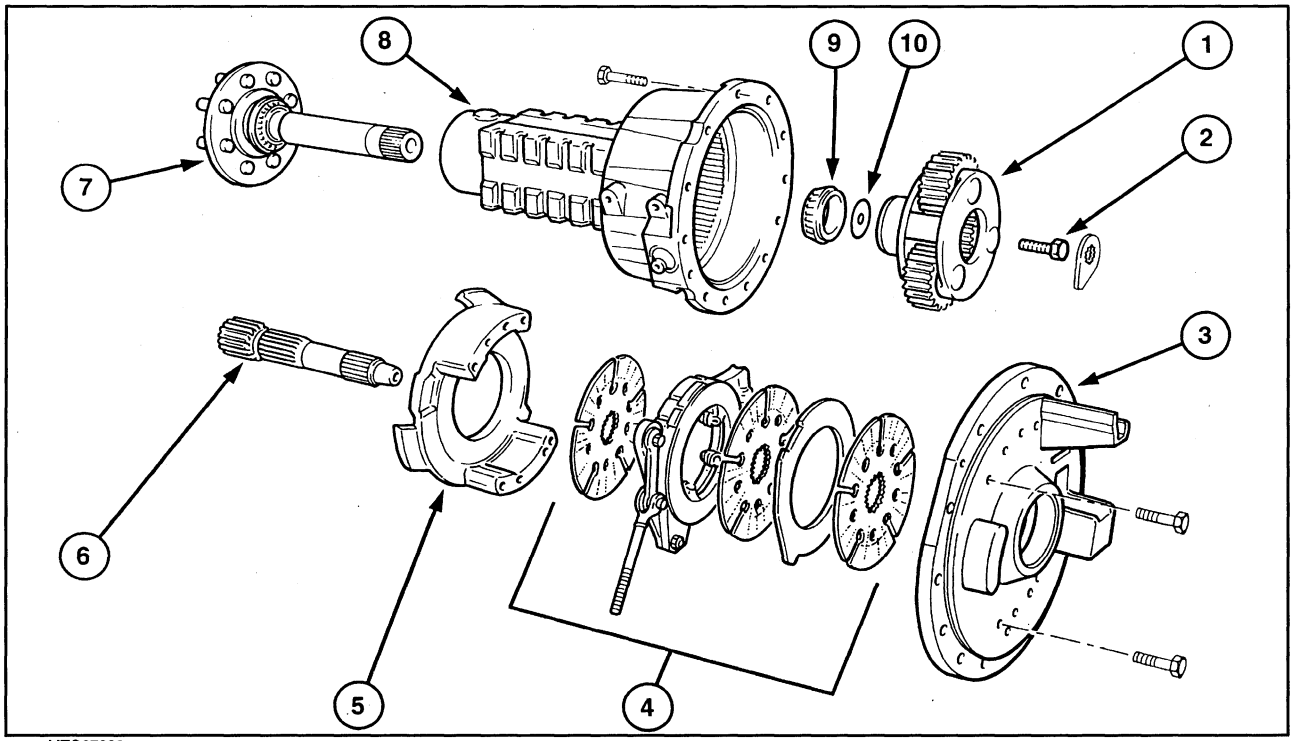

MTG27009

Rear Axle Half Shaft Assembly 260

1. Planetary Reduction Gears and Carrier
2. Carrier Retaining Bolt and Lock Tab
3. Inner Brake Housing
4. Brake Discs and Actuator
5. Outer Brake Housing
6. Sun Gear and Shaft
7. Axle Shaft
8. Axle Shaft Housing
9. Axle Shaft Bearing
10. Shim

INSPECTION AND REPAIR

1. Inspect all components for damage or excessive wear. Install new components as necessary.

2. If the axle shaft outer cone and roller assembly (3) and or the shaft seal requires removal, use puller, Tool No. 938 (4), legs, Tool No. FNH09521 (1), pulling attachment, Tool No. FNH09526 (2) and a suitable shaft protector, Tool No. FNH09212, Figure 261.

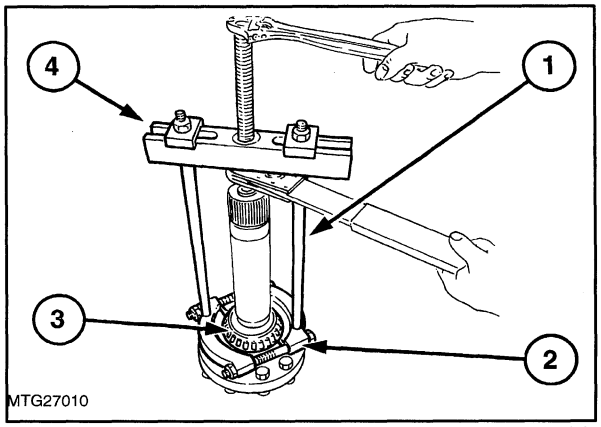

261

3. Install the shaft seal followed by the cone bearing using suitable sleeves and a press.

4. If required, use slide hammer, Tool No. FNH09507 (4) and puller, Tool No. FNH09567 (1), to remove the bearing cup (3) from the outer end of the axle housing (2), Figure 262. To replace the cup use a suitable stepped plate and a mallet, install cup until fully seated in housing.

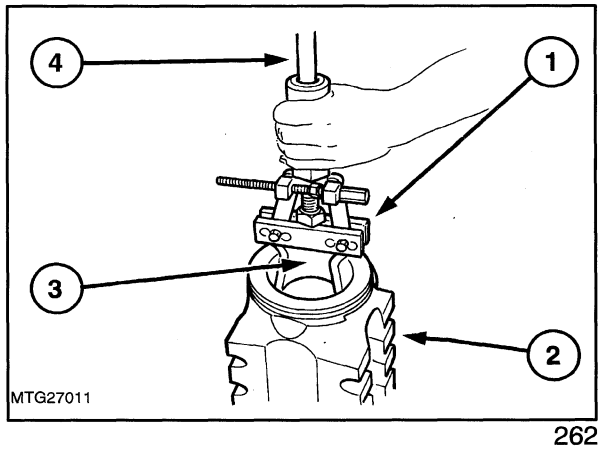

262

RE-ASSEMBLY AND INSTALLATION

Re-assembly and installation of the rear axle shaft assembly follows the disassembly procedure in reverse, observing the following requirements:

- Ensure the brake actuators (1) and hydraulic hoses are correctly installed. The left hand actuator pipework faces towards the wheel hub. The right hand actuator pipework faces up, towards the installer.

- Apply a suitable wheel bearing grease to the shaft seal and cone and roller assembly.

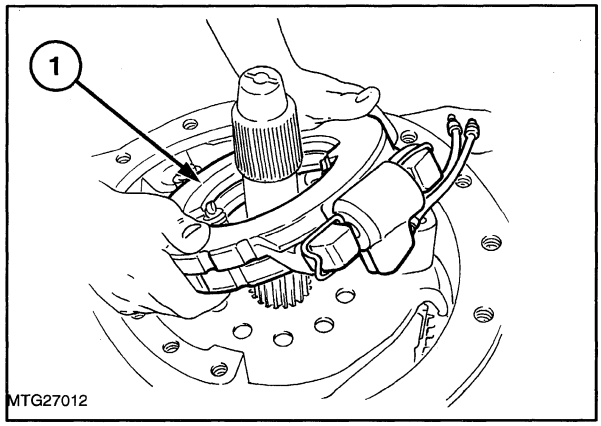

263

- Prior to installation of the axle housing make the following adjustments as described under the 'Adjustments' Section of this Chapter:

  (i) Adjust the axle shaft bearing pre-load.

  (ii) Adjust the differential bearing pre-load if any of the following components have been replaced:

- Planetary ring gear
- Outer brake housing
- Inner brake housing
- Rear axle centre housing
- Right hand axle housing

- Tighten all nuts and bolts to the correct tightening torques detailed in the specifications.
- Refill the rear axle with the correct grade and quantity of oil as detailed in the specifications.
- Check and where necessary, adjust the foot brakes of mechanically operated systems and the handbrake of all models.

PLANETARY GEAR ASSEMBLY AND AXLE HOUSING - OVERHAUL

REMOVAL

Remove the axle housing from the centre housing and withdraw the planetary gear assembly as described in the previous section.

DISASSEMBLY

1. Remove the ring retaining the planet gear shafts.
2. Place the carrier assembly on a press with a suitable step plate adaptor, Tool No. 630T, under the cone and roller assembly.

NOTE: *The cone and roller assembly is only fitted to the carrier of 8×2 model tractors. The lower pulling attachment tool is not required on 12×12 and 16×16 model axles.*

3. Using a second step plate adaptor, Tool No. FNH09211 (1), three or four suitable sockets (2), depending on carrier type, pulling attachment, Tool No. FNH09526 (4), taper base, Tool No. 370 (6) and slave ring, Tool No. CT.9056 (7), remove the cone (5) and planet gear shafts (3). Figure 264.

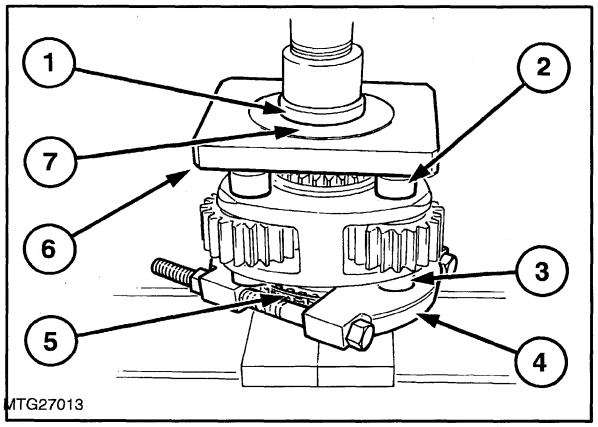

264

4. Remove the gears from the carrier and withdraw the thrust washers and spacers, Figure 265.

NOTE: *Retain the needle rollers located between the planet gear shafts and the gears for use during reassembly.*

5. Use slide hammer, Tool No. 943S and puller, Tool No. 943, to remove the bearing cup located within the axle housing.

INSPECTION AND REPAIR

1. Clean and inspect all items for damage and excessive wear. Install new components where necessary.

2. If the planetary ring gear requires replacement observe the following procedure:

- Remove the axle shaft from the housing.

- Fabricate a suitable plate, as shown in Figure 266, to be used in conjunction with the sliding ends of Tool No. FT4500. Insert the tool sliding ends behind the ring gear and tighten the locknuts (4), Figure 267.

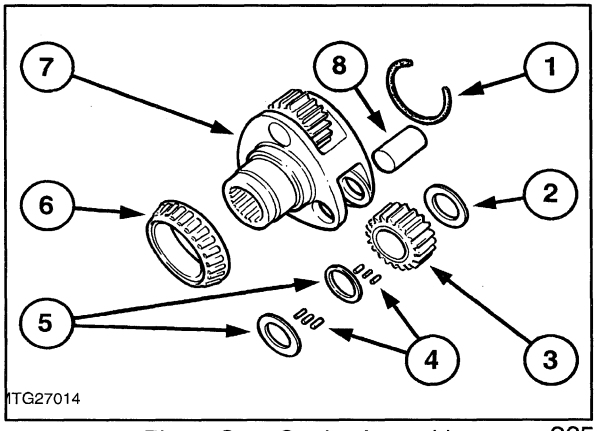

Planet Gear Carrier Assembly 265

1. Retaining Ring
2. Thrust Washer
3. Planet Gear
4. Rollers
5. Thrust Washers
6. Cone and Roller Assembly (S Model Only)
7. Carrier
8. Planet Gear Shaft

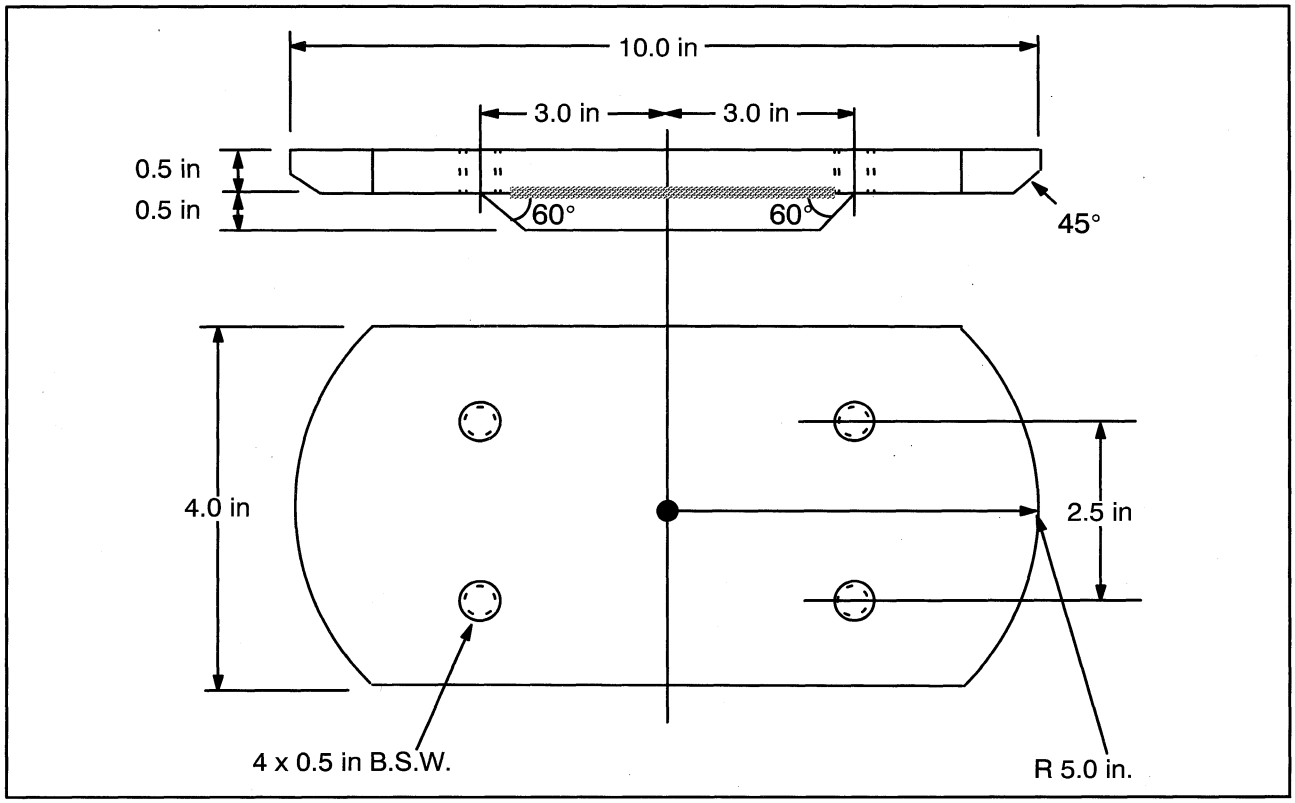

Ring Gear Removal Adaptor Plate 266

- Position the axle housing under an hydraulic press with the bell end of the housing on the floor. Insert a suitable bar between the remover/replacer (2) and the head of the press ram. Press the planetary ring gear (1) out of the housing (3).

- To replace the ring gear position the axle housing with the bell end upper-most.

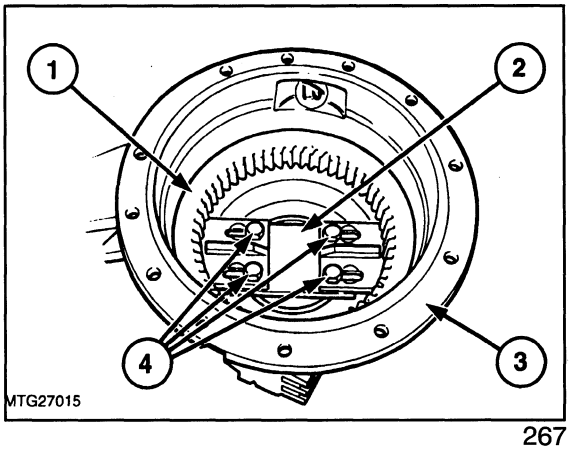

267

- Place a new ring gear in the housing, position the tool on the new ring gear then press into position. Ensure the gear is seated correctly and there is no gap between the bottom of the gear and the housing shoulder.

RE-ASSEMBLY

Re-assembly of the planetary gear assembly follows the disassembly procedure in reverse. On reassembly observe the following requirements:

- On reassembly of the planet gear carrier, install an equal number of rollers either side of the spacer within the gear (2) bores.

NOTE: *There is a total of 58 rollers per planet gear.*

Use grease to retain the rollers in position whilst installing the planet gear shafts. Position the shafts (1) with the flat portion of the shaft heads away from the centre of the carrier, Figure 268, then install the shaft retaining ring (3). Bend each end of the ring to ensure it maintains the correct position.

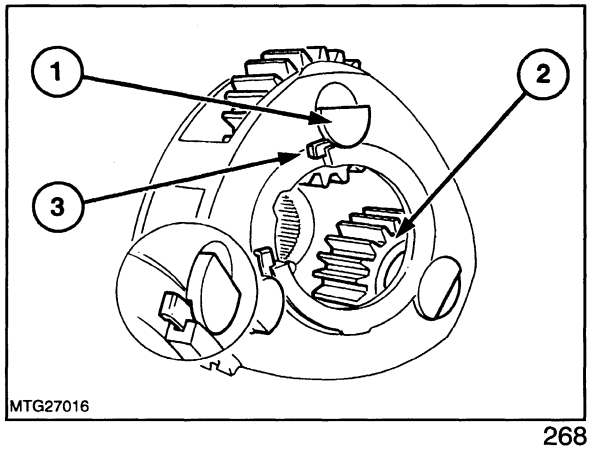

268

Planet Gear Carrier Ring Replacement

1. Planet Gear Shaft
2. Planet Gear
3. Retaining Ring

INSTALLATION

Installation of the planetary gear assembly follows the removal procedure in reverse. On installation ensure all bolts are correctly tightened to the torques detailed in Specifications.

DIFFERENTIAL AND DIFFERENTIAL LOCK ASSEMBLY - OVERHAUL

REMOVAL

1. Prior to removal, chock the front wheels and release the handbrake.
2. Drain the oil from the rear axle housing.
3. Raise and support the rear of the tractor to allow removal of the right hand wheel and right hand axle shaft housing.
4. With the axle shaft housing removed withdraw the differential assembly (1) from the centre housing.

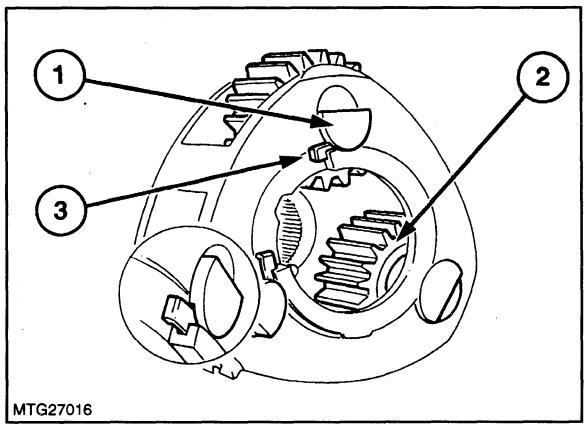

269

DISASSEMBLY

With reference to Figure 270.

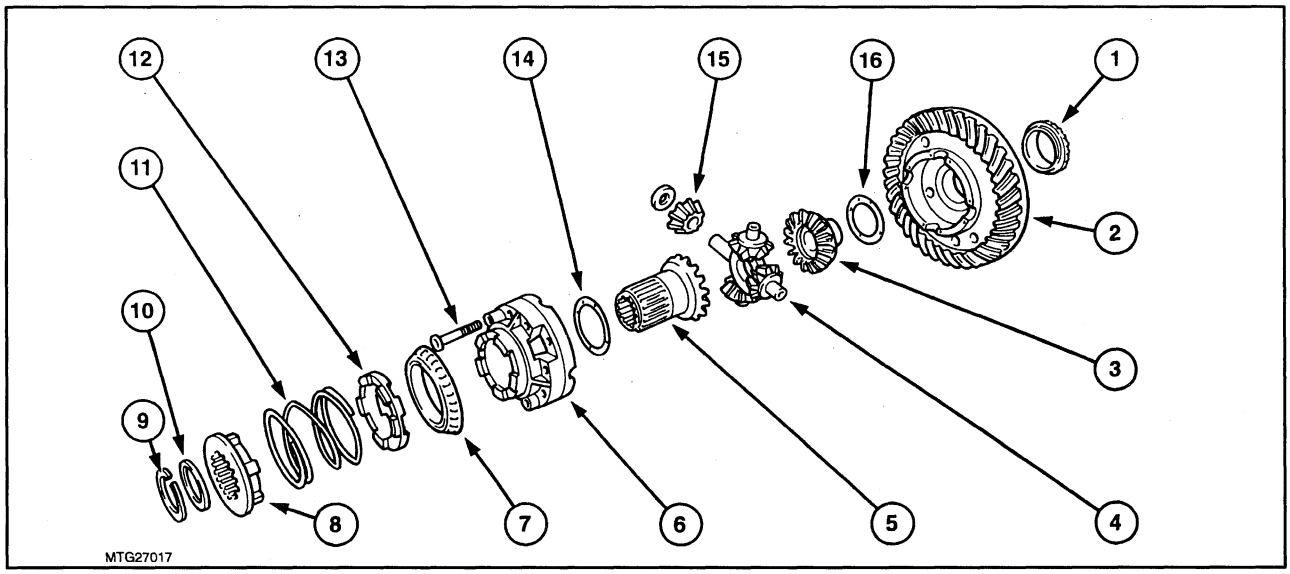

Differential Assembly 270

1. Cone and Roller Assembly
2. Ring Gear and Housing Assembly
3. Side Gear
4. Pinion Gear Assembly
5. Side Gear
6. Housing
7. Cone and Roller Assembly
8. Coupling
9. Retaining Ring
10. Washer
11. Spring
12. Adaptor
13. Retaining Bolt
14. Thrust Washer
15. Thrust Washer

1. Remove the differential lock ring from the end of the side gear. Withdraw the stop washer, coupling, spring and adaptor.

2. Mark the two halves of the differential case to facilitate correct installation on reassembly.

3. Remove the differential cone and roller assembly (3) from the smaller half of the case. Use puller, Tool No. FNH09516 (1), pulling adaptor, Tool No. FNH09526 (2) and step plate adaptor, Tool No. FNH09210 (4), Figure 271.

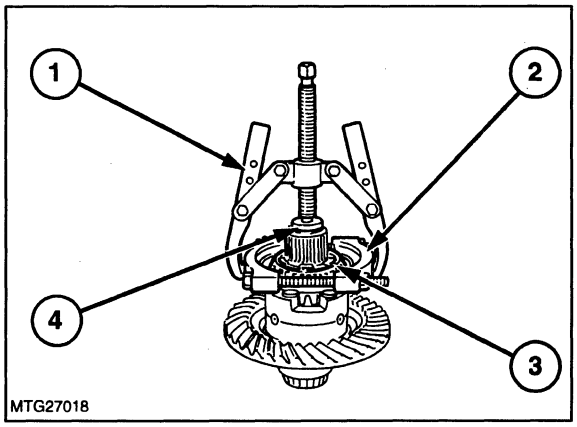

271

4. Extract the differential case retaining bolts.

NOTE: *If the cone and roller assembly installed on the smaller half of the case does not require removal, withdrawal of the case retaining bolts may be effected by lifting the smaller half of the case and gradually removing the bolts.*

5. Separate the differential case.

6. Withdraw the thrust washer and side gear, the spider and pinion assembly and the second side gear and washer from the case.

7. Remove the cone and roller assembly on the ring gear half of the housing using puller, Tool No. FNH09210, pulling attachment, Tool No. FNH09526 and step plate adaptor, Tool No. FNH09210.

8. Separate the pinion gears from the spider.

INSPECTION AND REPAIR

1. Clean and inspect all components for damage or excessive wear. Install new components where necessary.

2. If a new differential ring gear is required, it will be necessary to drill out the rivets, installed during production and replace them with nuts and bolts, available from the Parts department. The bolts should be tightened to a torque value of 85 lbf.ft (115 Nm).

NOTE: *If the ring gear is replaced, a new matching drive pinion must also be installed. Refer to the following section, 'Drive Pinion Assembly Overhaul' of this Chapter.*

RE-ASSEMBLY

Re-assembly of the differential and differential lock follows the disassembly procedure in reverse. On re-assembly observe the following requirements:

- Coat all bearings with a suitable wheel bearing grease prior to installation.
- Tighten the differential case retaining bolts to a torque value of 68-92 lbf.ft (92-125 Nm).

INSTALLATION

Installation of the differential and differential lock follows the removal procedure in reverse. On installation observe the following requirements:

- Check the differential bearing pre-load, refer to 'Adjustments" Section of this Chapter.

DIFFERENTIAL LOCK OPERATING LINKAGE OVERHAUL - (Mechanically Actuated)

REMOVAL

1. Loosen the locknut of the pedal assembly and remove the pedal assembly.

2. Remove the two bolts securing the hanger to the centre housing and withdraw the hanger and operating rods as an assembly.

3. Pull the fork operating rod from the centre housing.

4. Remove the operating rod oil seal from the centre housing if previously leaking or damaged.

5. If the operating fork requires replacement it will be necessary to remove the left hand axle shaft housing as described in Section 21 120, Rear Axle Shaft Overhaul, of this Chapter.

6. With the housing removed, remove the two bolts securing the fork pivot shaft to the centre housing and withdraw the shaft and fork as an assembly.

7. Remove the retaining ring and washer then slide the pivot shaft from the fork.

INSPECTION AND REPAIR

1. Clean and inspect all components for damage or excessive wear. Install new components where necessary.

2. If the pedal hanger bushes require renewal, observe the following procedure:

   (i) Knock the pin out of the hanger and pedal assembly then separate the pedal from the hanger.

   (ii) Use bushing kit, Tool No. FNH09514, to remove and install the two bushings of the hanger.

   (iii) Align the pedal assembly to the hanger and replace the pin.

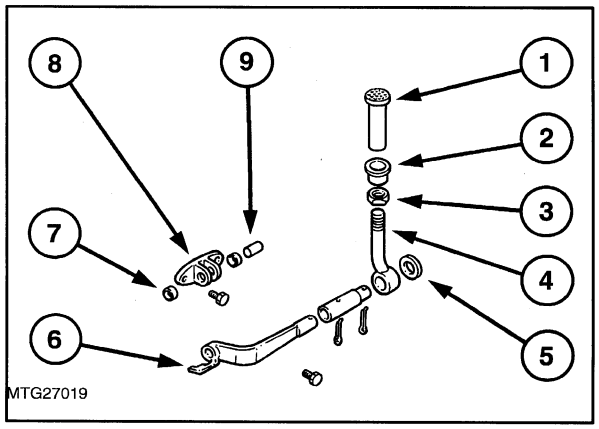

Differential Lock Linkage 272

1. Foot Pedal
2. Floor Panel Sleeve
3. Locknut
4. Pedal Operating Rod
5. Washer
6. Shaft Operating Rod
7. Bush - 2 off
8. Hanger
9. Hanger Pivot Pin

INSTALLATION

Installation of the differential lock operating linkage follows the removal procedure in reverse. On installation observe the following requirements:

- Tighten the differential lock fork pivot shaft retaining bolts to 42-56 lbf.ft (57-76 Nm).
- Tighten the hanger retaining bolts to 42-56 lbf.ft (57-76 Nm).
- If the rear axle housing has been removed ensure the the housing retaining bolts are tightened to 130-190 lbf.ft (176-258 Nm)
- Refill the axle with the correct grade and quantity of oil, see specifications.

DRIVE PINION ASSEMBLY - OVERHAUL

REMOVAL

1. Separate the tractor between the transmission and rear axle housing. Refer to the Section, 'Separating The Tractor'.

2. Remove the P.T.O. clutch housing as described in the P.T.O. Section.

3. Where fitted, remove the transmission handbrake assembly, as detailed in Chapter 2 of this Section.

4. Remove the differential assembly as described in the Differential Lock Overhaul Section.

5. Remove the drive pinion assembly (1) by extracting the retaining bolts and washers and withdrawing the assembly from the housing (3), Figure 273

NOTE: *To facilitate removal of the drive pinion assembly, two threaded holes are provided in the pinion bearing retainer (2), for jacking bolts (4).*

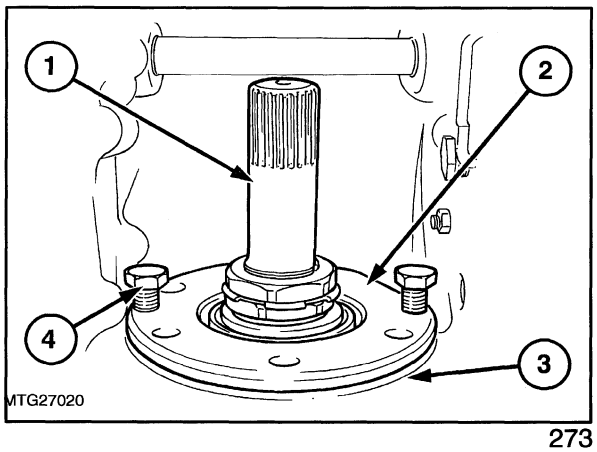

273

DISASSEMBLY

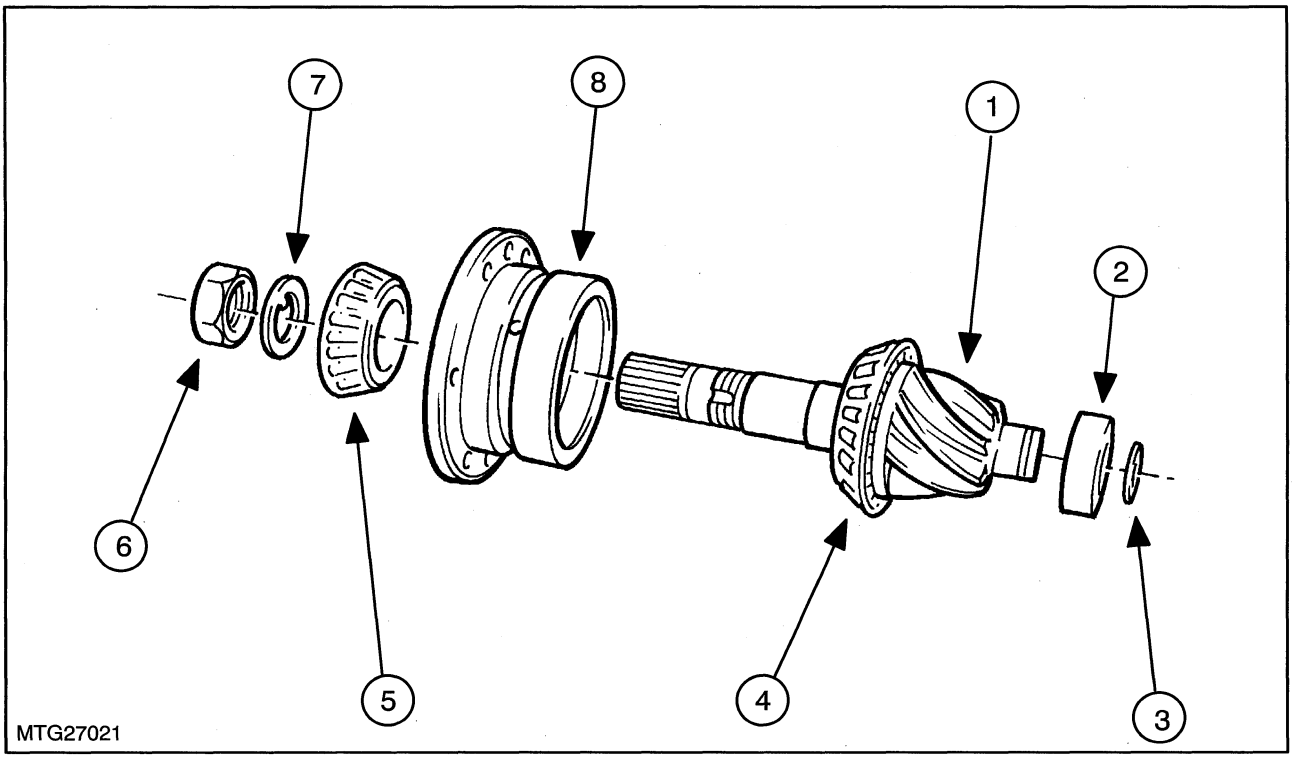

Drive Pinion Assembly 274

1. Pinion Shaft
2. Pinion Bearing
3. Retaining Ring
4. Cone and Roller Assembly
5. Cone and Roller Assembly
6. Pinion Nut
7. Spacer
8. Pinion Assembly Housing

With reference to Figure 274.

NOTE: *There may be either a staked nut or double nut with a locking tab washer arrangement securing the pinion shaft to the bearing retainer.*

1. Remove the stake nut or double nut from the pinion shaft.
2. Slide the spacer, transmission handbrake drive gear and shims, where fitted, or the washer from the pinion shaft.
3. Use a soft headed mallet to knock the front end of the pinion shaft assembly from the bearing retainer. Lift the front cone and roller assembly from the retainer.
4. Remove the lock ring from the front of the pinion gear and pull the pinion bearing from the shaft using puller, Tool No. FNH09198 and pulling attachment, Tool No. FNH09190.
5. Remove the cone and roller assembly from the shaft using puller, Tool No. FNH09516 and pulling attachment, Tool No. FNH09190.

INSPECTION AND REPAIR

1. Clean then inspect all components for damage or excessive wear. Install new parts where necessary.
2. If necessary, remove the bearing cups from the retainer using slide hammer, Tool No. 943S and puller, Tool No. 943. Use step plate adaptor, Tool No. 630S and a press to install new bearing cups.
3. Use puller, Tool No. 1003, pulling attachment, Tool No. 951 and a suitable sleeve to install the rear cone and roller assembly to the pinion shaft.

RE-ASSEMBLY

NOTE: *If a new pinion shaft is to be installed a new matching differential gear must also be installed. Refer to Section, 'Differential and Differential Lock Assembly Overhaul', of this Chapter.*

Re-assembly of the drive pinion assembly follows the disassembly procedure in reverse. On reassembly observe the following requirements:

- Check the pinion bearing pre-load, see Adjustments', Section of this Chapter.

INSTALLATION

Installation of the drive pinion assembly follows the removal procedure in reverse. On installation observe the following requirement:

- Tighten the bearing retainer support bolts to 100-125 lbf.ft (136-170 Nm).

ADJUSTMENTS

AXLE SHAFT BEARING PRE-LOAD

1. Install the axle shaft into the axle shaft housing.
2. Install the inner bearing cone and roller assembly onto the shaft. Using a suitable sized tube, tap the bearing onto the shaft. **DO NOT** fully seat the bearing into the bearing cone.
3. Install the largest, (2.16 mm), spacer (1) onto the axle shaft and install the planetary gear carrier into the housing.
4. Install and tighten the carrier retaining bolt to the correct torque value of 250-400 lbf.ft (339-542 Nm).

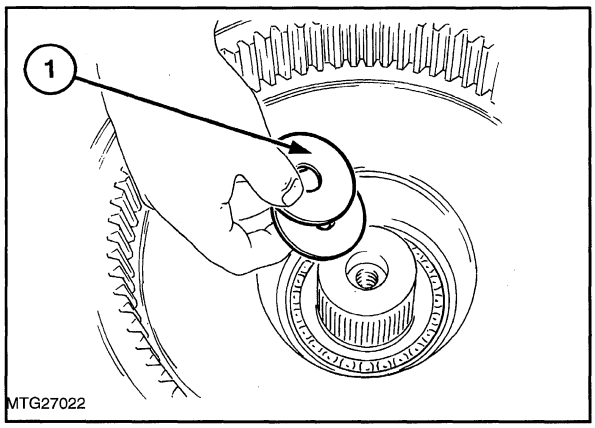

275

5. Set a dial indicator (3), as shown in Figure 276. Zero the gauge and measure the end float by lifting the axle casing (1).
6. Subtract the measured end float from the size of the spacer installed. Use the resultant figure to determine, from table 1, the correct size of spacer to be installed.

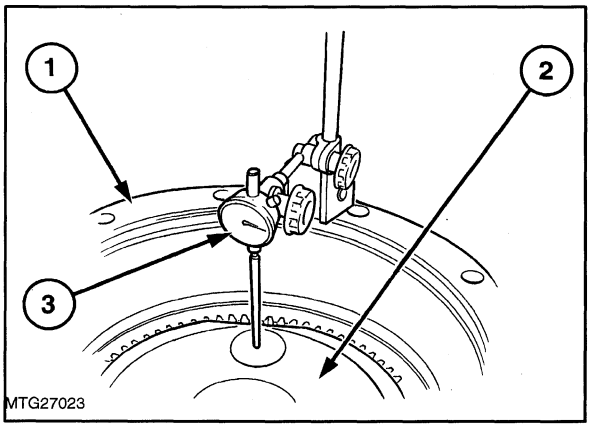

276

EXAMPLE:

Spacer Installed	2.16 mm	0.085 in
Reading Obtained	0.66 mm	0.026 in
Resultant Figure	1.50 mm	0.059 in

From the table, the correct size of spacer to be used is 1.35 mm (0.053 in).

7. Remove the axle shaft retaining bolt then withdraw the planet gear carrier assembly (2), Figure 276, lock washer and large spacer.

8. Install the new selected spacer then the washer and planet gear carrier assembly and tighten the retaining bolt to a torque of 250-400 lbf.ft (339-542 mm).

9. After shimming is complete, measure the axle shaft rolling torque. Fabricate a plate (1) to slide over the wheel studs (3) as shown in Figure 277, with a nut or bolt head welded in the centre. Using a suitable torque wrench (2) the rolling torque should be between 8.3 - 20.8 lbf.ft. (11.6 - 28.2 Nm.) If necessary, add shims to reduce the rolling torque or subtract shims to increase the rolling torque.

10. Repeat for the second axle shaft.

Table 1:

RESULTANT FIGURE	SPACER TO BE INSTALLED
0.049-0.052 in (1.24-1.32 mm)	0.045 in (1.14mm)
0.053-0.056 in (1.35-1.42 mm)	0.049 in (1.24 mm)
0.057-0.060 in (1.45-1.52 mm)	0.053 in (1.35 mm)
0.061-0.064 in (1.55-1.63 mm)	0.057 in (1.45 mm)
0.065-0.068 in (1.65-1.73 mm)	0.061 in (1.55 mm)
0.069-0.072 in (1.75-1.83 mm)	0.065 in (1.65 mm)
0.073-0.076 in (1.85-1.93 mm)	0.069 in (1.75 mm)
0.077-0.080 in (1.96-2.03 mm)	0.073 in (1.85 mm)
0.081-0.084 in (2.06-2.13 mm)	0.077 in (1.96 mm)
0.085-0.088 in (2.16-2.24 mm)	0.081 in (2.06 mm)
0.089-0.092 in (2.26-2.34 mm)	0.085 in (2.16 mm)

DIFFERENTIAL BEARING PRE-LOAD

The bearing pre-load is adjusted by adding or subtracting shims between the differential bearing cup and the inner brake housing. The adjustment is made to the bearing in the right hand axle shaft housing.

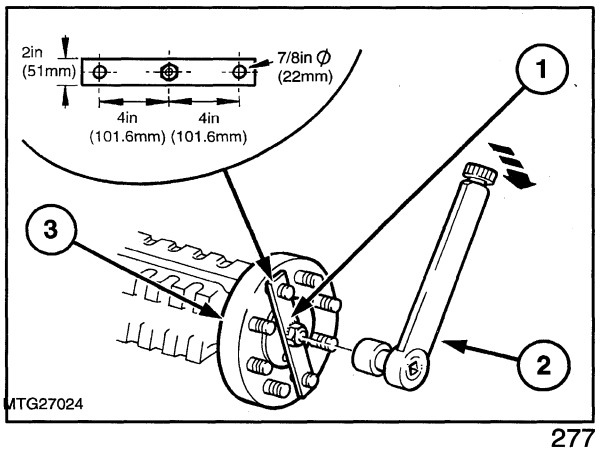

277

1. Assemble the inner brake disc into the axle shaft housing less the sun (intermediate) shaft, brake discs and actuator assembly.
2. Remove the differential bearing cup and shim from the inner brake housing (3).
3. Place the gauge ring of Tool No. FT.4501 (1) into the vacant bearing location, Figure 278.

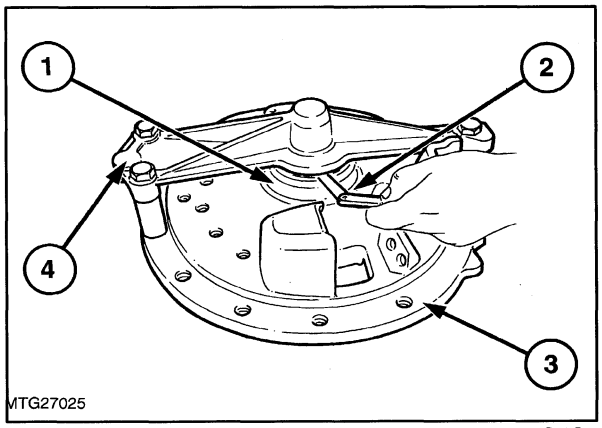

278

4. Bolt the bridge of Tool No. FT.4501 (4) across the inner brake housing flange, ensure the spacers are located between the flange and the tool.
5. Use feeler gauges (2) to measure the gap between the underside of the gauge bridge and the top side of the gauge ring.
6. From Table 2 determine the initial size of shim to be used.
7. Remove the gauge bridge and gauge ring and install the selected shim and bearing.
8. When shimming is completed check the rolling torque of the differential assembly using the following procedure:

NOTE: *It is very important to perform the rolling torque check as the bridge tool will only identify the intital shim size.*

Table 2:

GAP MEASURED	SHIM TO BE INSTALLED
0.024-0.029 in (0.61-0.74 mm)	0.038-0.040 in (0.97-1.02 mm)
0.030-0.035 in (0.76-0.87 mm)	0.044-0.046 in (1.12-1.17 mm)
0.036-0.041 in (0.91-1.04 mm)	0.050-0.052 in (1.27-1.32 mm)
0.042-0.047 in (1.07-1.19 mm)	0.056-0.058 in (1.42-1.47 mm)
0.048-0.053 in (1.22-1.35 mm)	0.062-0.064 in (1.58-1.63 mm)
0.054-0.059 in (1.37-1.50 mm)	0.068-0.070 in (1.73-1.78 mm)
0.060-0.065 (1.50-1.63 mm)	0.074-0.076 in (1.88-1.93 mm)
0.066-0.071 (1.65-1.78 mm)	0.080-0.082 in (2.03-2.08 mm)

(i) Remove the left hand axle shaft housing if not already removed.

(ii) Remove the pinion and bearing retainer assembly.

(iii) Remove the differential lock spring and slide the differential lock coupling into the engaged position (1).

(iv) With the differential assembly installed and the right hand inner brake housing flange bolted to the axle centre housing, install one of intermediate drive shafts (2) into the differential assembly.

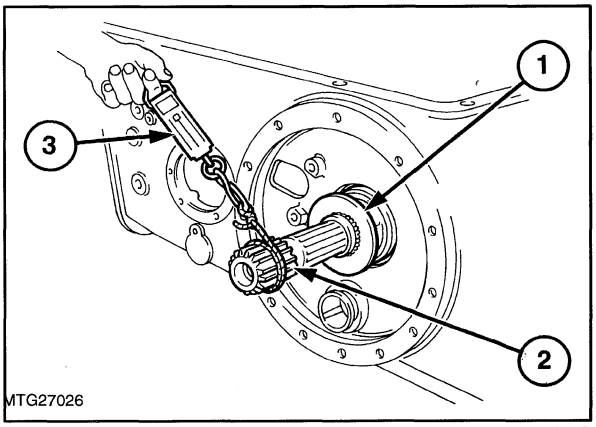

279

(v) Wrap a length of string around the intermediate shaft and attach to a suitable pull scale (3), Figure 279. Measure the rolling torque whilst the shaft is rotating, not at the point where rotation begins. The rolling torque should equate to a reading of between 15-67 lbf. (7.0-30.0 Kgf.) on the pull scale.

(vi) If necessary, add shims to increase the rolling torque or subtract shims to reduce the rolling torque

9. Assemble the rear axle as previously described in this Chapter.

PINION SHAFT BEARING PRE-LOAD

Prior to installation of the drive pinion and retainer assembly, check the pinion bearing pre-load as follows:

1. Lubricate the pinion bearings and locate the pinion (3) and retainer assembly (4) in a vice, Figure 280.

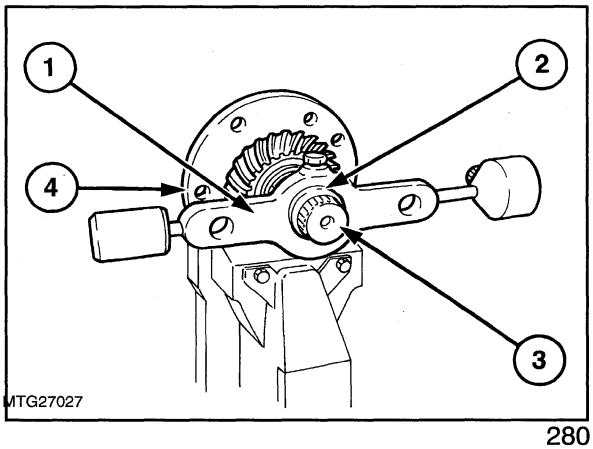

280

2. Install the adjusting (stake) nut or adjusting nut, new lock washer and locknut.

3. Using gauge, Tool No. T.4062 (1) and adaptor, Tool No. T.4062-2A (2), or a suitable spring pull gauge, Figure 281 check and adjust to obtain the correct pre-load as shown in Table 3.

4. When the correct pre-load is obtained tighten the locknut and bend tabs on the lockwasher or stake the nut as required.

5. Recheck the pre-load.

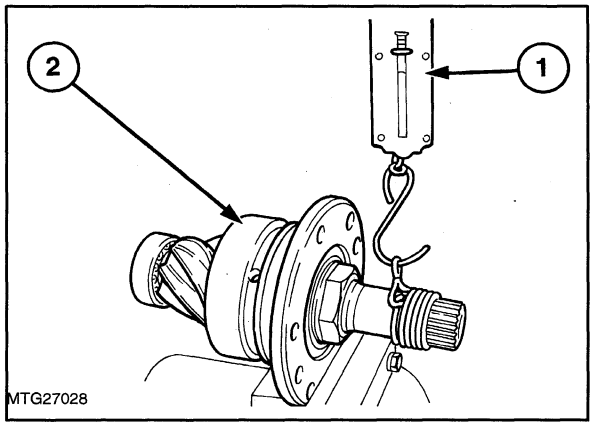

281

Table 3:

Using Gauge, Tool No. FT.4602 10-17 lb.in (1.1-1.9 Nm)
Using a Spring Pull Gauge 13-23 lbf. (5.9-10.5 Kgf.)

TS Series 16 x 16 ElectroShift™ Transmission

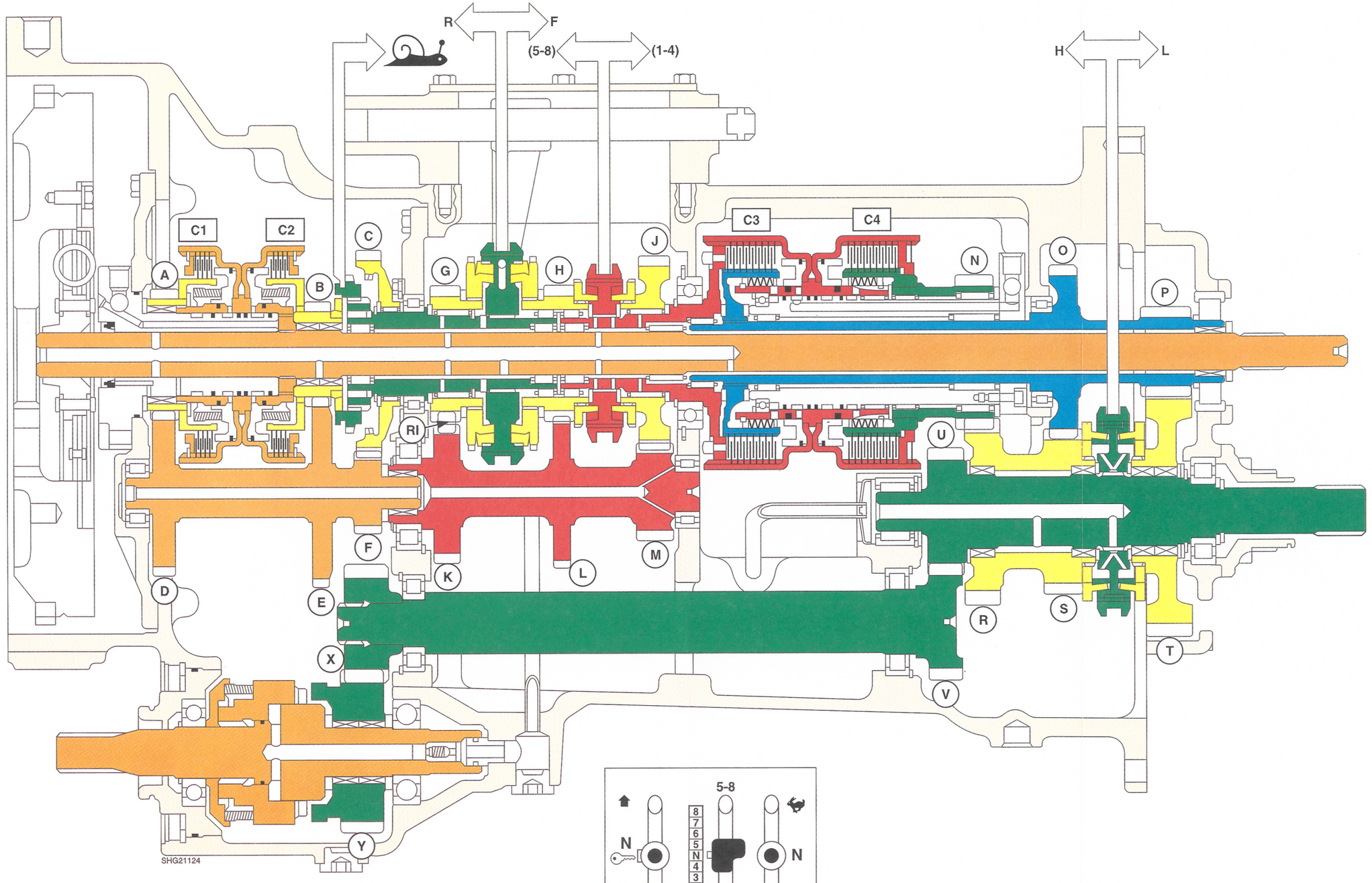

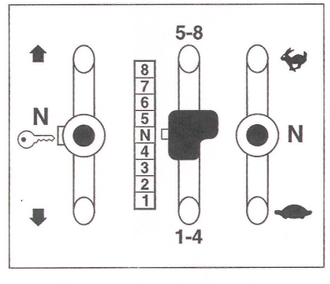

TS SERIES 12 x 12 SYNCHROCOMMAND

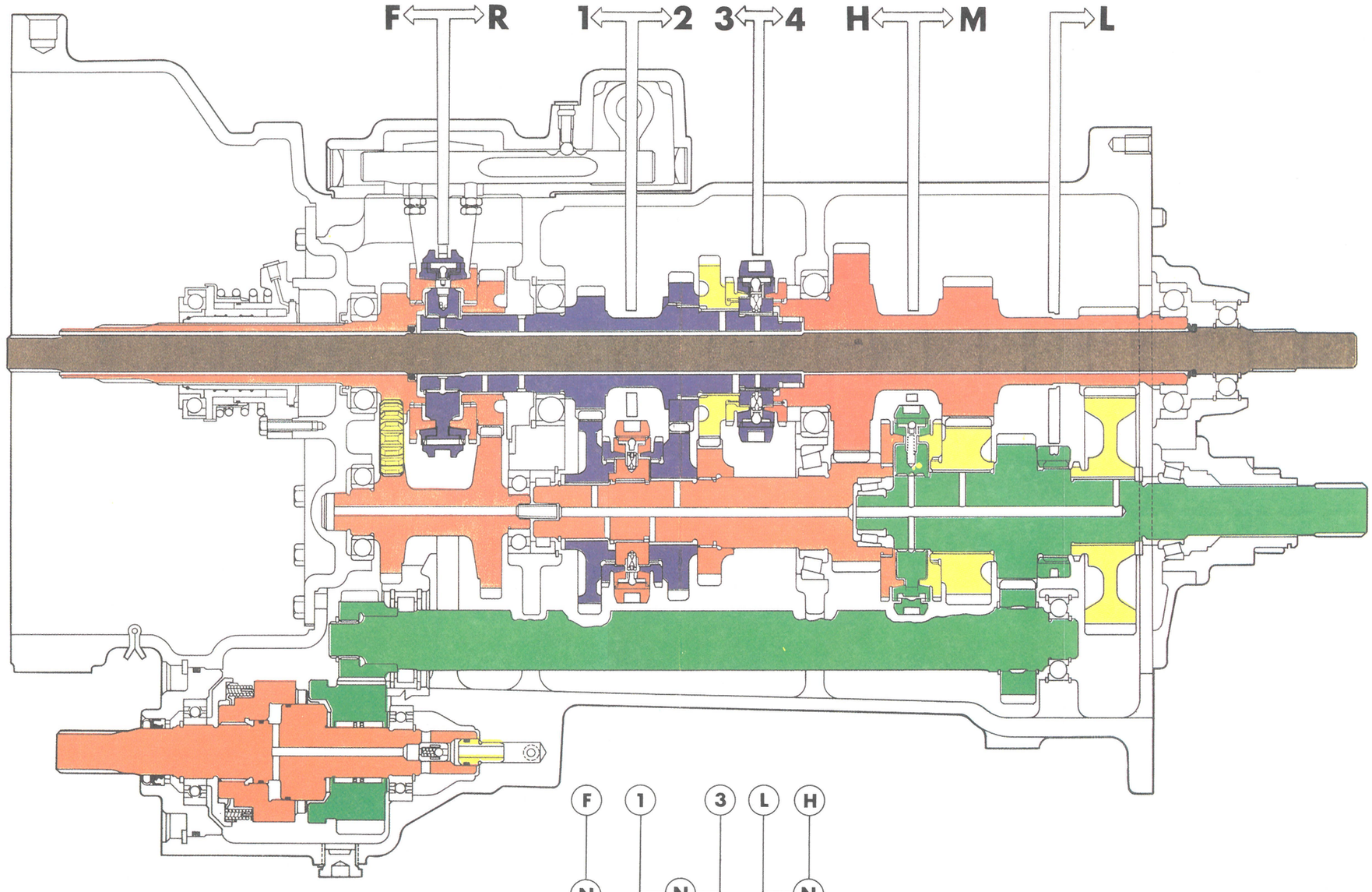

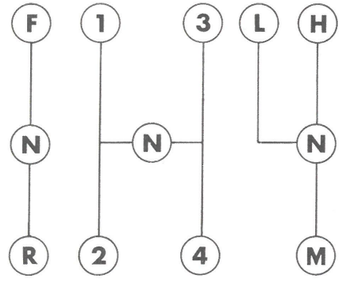

TS SERIES 24x24 DUALCOMMAND

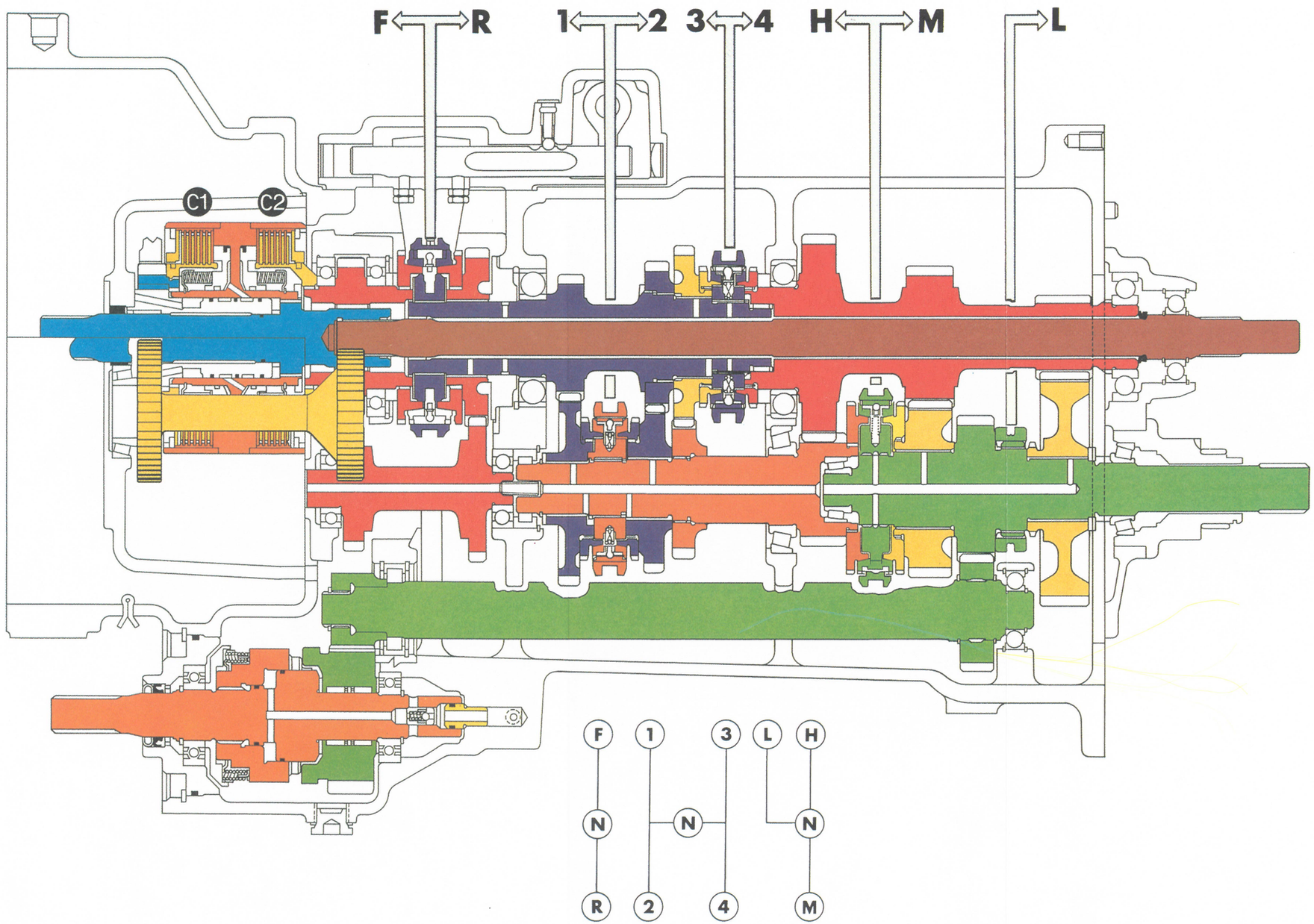

INDEX

Clutch adjustment 6-5
Clutch fill time calibration, 16 x 16 6-59
Clutch overhaul - hydraulic operation 6-10
Clutch overhaul - mechanical operation 6-6
Clutch pilot bearing 6-9
Clutch spring pressure calibration, 24 x 24 . 6-318
Clutch quick fill adjustment, 24 x 24 6-321
Clutches 6-2
Clutches descriptions and operation 6-5
Description and operation, 8 x 2 6-243
Description and operation, 12 x 12 6-206
Description and operation, 16 x 4 6-269
Description and operation, 16 x 16 6-21
Description and operation,
16 x 16 Power shuttle 6-114
Description and operation, 24 x 24 6-297
Description and operation, front axle 6-376
Description and operation, rear axle 6-393
Description and operation,
reduction gearbox 6-286
Differential and differential lock
assembly - overhaul, rear axle 6-406
Drive pinion assembly - overhaul, rear axle 6-409
Electrical system, 24 x 24 6-300
Error codes, 16 x 16 6-63
Error codes, 24 x 24 6-323
Front axle 6-375
Gear shift levers and covers -
overhaul, 8 x 2 6-246
Hydraulic system, 24 x 24 6-303
Mechanical rear wheel drive 6-389
Planetary gear assembly and
axle housing - overhaul 6-403
Planetary gear set - overhaul, 16 x 4 6-274
Power flows, 16 x 16 6-29
Pressure testing, 16 x 4 6-282
Rear axle 6-389
Rear axle haft shaft assembly overhaul 6-398
Reduction gearbox assembly 6-285
Reduction gearbox overhaul 6-288
Serviceable components - installed, 12 x 12 6-213
Special tools, clutches 6-3
Special tools, front axle 6-376
Special tools, rear axle 6-391
Special tools, reduction gearbox assembly . 6-285
Special tools, 8 x 2 6-242
Special tools, 16 x 4 6-266
Special tools, 16 x 16 6-18
Special tools, 24 x 24 6-296
Spring pressure calibration, 16 x 16 6-55
Transfer box - overhaul, front axle 6-378
Transmission, 8 x 2 6-239
Transmission, 12 x 12 6-203
Transmission, 16 x 4 6-265
Transmission, 16 x 16 6-15
Transmission, 16 x 16 Power shuttle 6-111
Transmission, 24 x 24 6-295
Transmission components, 8 x 2 6-262
Transmission component assemblies,
12 x 12 6-234
Transmission calibration,
16 x 16 Power shuttle 6-124
Transmission clutch calibration, 16 x 16 6-54
Transmission clutch calibration, 24 x 24 6-317
Transmission control/operation, 16 x 16 6-26
Transmission front end - overhaul, 8 x 2 ... 6-248
Transmission gear description, 16 x 16 6-28
Transmission hydraulic circuit schematic,
16 x 16 6-40
Transmission hydraulic control, 16 x 16 6-27
Transmission lubrication pressure test,
16 x 4 6-283
Transmission overhaul, 8 x 2 6-251
Transmission overhaul, 12 x 12 6-224
Transmission overhaul, 24 x 24 6-360
Transmission systems 6-15
Troubleshooting, clutches 6-3
Troubleshooting, 12 x 12 6-205
Troubleshooting, 16 x 4 6-267
Troubleshooting, 16 x 16 6-15
Troubleshooting, 16 x 16 Power shuttle 6-133
Troubleshooting, limp home, calibrations
and pressure testing, 16 x 16 6-47
Troubleshooting, pressure testing
16 x 16 Power shuttle 6-199
Troubleshooting, limp home, calibrations
and pressure testing, 24 x 24 6-311
Troubleshooting, rear axle 6-391

SECTION 7
FRONT AXLE
CONTENTS

FRONT AXLE MECHANICAL TRANSMISSION 7-2
TWO WHEEL DRIVE AXLE 7-41
INDEX 7-49

FRONT AXLE MECHANICAL TRANSMISSION

FRONT AXLE FOUR WHEEL DRIVE

SPECIFICATION

Type	steering, load bearing structure, pivoting at centre	
Bevel gear pair - differential		
Pinion-crown gear ratio	10/32 = 3.2:1	
	mm	**inches**
Backlash between bevel gear pair	0.15-0.20	0.006-0.008
Thickness of pinion position adjustment spacer (7), page 6 and (4), page 8	2.5 up to 3.7 in 0.1 intervals	0.098 up to 0.145 in 0.004 intervals
Thickness of pinion bearing adjustment spacer (8), page 6 and (5), page 8	2.5 up to 4.8 in 0.05 intervals	0.098 up to 0.189 in 0.002 intervals

SPECIFICATION

		mm	inches
Thickness of crown wheel position adjustment spacer (3, page 6)		0.9 – 1 – 1.1 – 1.2 – 1.3 – 1.4 – 1.5 – 1.6 – 1.7 – 1.8 – 1.9 – 2	0.035 – 0.039 – 0.043 – 0.047 – 0.051 – 0.055 – 0.059 – 0.062 – 0.067 – 0.071 – 0.075 – 0.079
Backlash between planet pinions and side gears		0.15	0.006
Thickness of planet pinion thrust washers		1.470 – 1.530	0.058 – 0.060
Thickness of side gear thrust washers		1.4 – 1.5 – 1.6 – 1.7 – 1.8	0.055 – 0.059 – 0.063 – 0.067 – 0.071
Diameter of cross pin for planet pinions:		23.939 – 23.960	0.9425 – 0.9433
Diameter of cross pin bore in planet pinions:		24.040 – 24.061	0.946 – 0.947
Clearance between cross pin and bores		0.080 – 0,122	0.003 – 0.005
Diameter of side gear hubs		43.961 – 44.000	1.731 – 1.732
Diameter of side gear hub bores in differential cage . . .		44.080 – 44,119	1.735 – 1.737
Clearance between side gears and bores		0.080 – 0,158	0.003 – 0.006
Differential lock, self locking			
Single sided friction plate	New Minimum thickness	2.8 2.7	0.110 0.106
Double sided friction plate	New Minimum thickness	1.6 1.45	0.063 0.057
Steel separator plates	New Minimum thickness	1.5 1.4	0.059 0.055
Differential lock, hydraulically operated			
Free length of spring (1, page 6):		~ 87	3.425
Spring length under load of: 1888 – 2035 N (192.5 – 207.5 kg)		~ 48	1.890
Axle shafts and steering knuckles			
Diameter of outer axle shafts (5 and 7) in correspondence with bushes (8):		41,975 – 42,000	1.652 – 1.653
Inside diameter of installed bushes (8), page 7:		42.100 – 42.175([1])	1.657 – 1.660
Clearance between axle shafts and bushes		0.100 – 0.200	0.004 – 0.008
Interference fit between bushes and respective bores .		0.064 – 0.129	0.003 – 0.005
Thickness of swivel bearing shims (7), page 7		0.10 – 0.15 – 0.20 – 0.25 – 0.30	0.004 – 0.006 – 0.008 – 0.010 – 0.012
Epicyclic final drives			
Gear ratio:		15:(15:75) = 6:1	
Thickness of driven gear shims (1, page 7)		0.77 – 0.83	0.030 – 0.033

([1]) measurement to be obtained without reaming

(continued overleaf)

SPECIFICATION

(continued)

	mm	inches
Axle pivot		
Endfloat at pivot between axle casing and relative supports	0.3 - 1.1	0.012 - 0.043
Wear limit endfloat	2	0.078
Diameter of front pivot pin	52.652 - 52,671	2.073 - 2.074
Inside diameter of installed front bush	52.720 - 52.790([1])	2.076 -2.078
Clearance between pin and bush	0.049 - 0.138	0.019 - 0.005
Outside diameter of rear bush installed in bevel pinion support	99.020 - 99.050	3.898 - 3.900
Inside diameter of rear bush installed in axle pivot support	99.146 - 99.221([1])	3.903 - 3.906
Clearance between two bushes	0.096 - 0.201	0.004 - 0.008
Thickness of front and rear thrust washer of front axle	4.90 - 5.00	0.139 - 0.197

([1]) measurement to be obtained without reaming

TORQUE SPECIFICATIONS

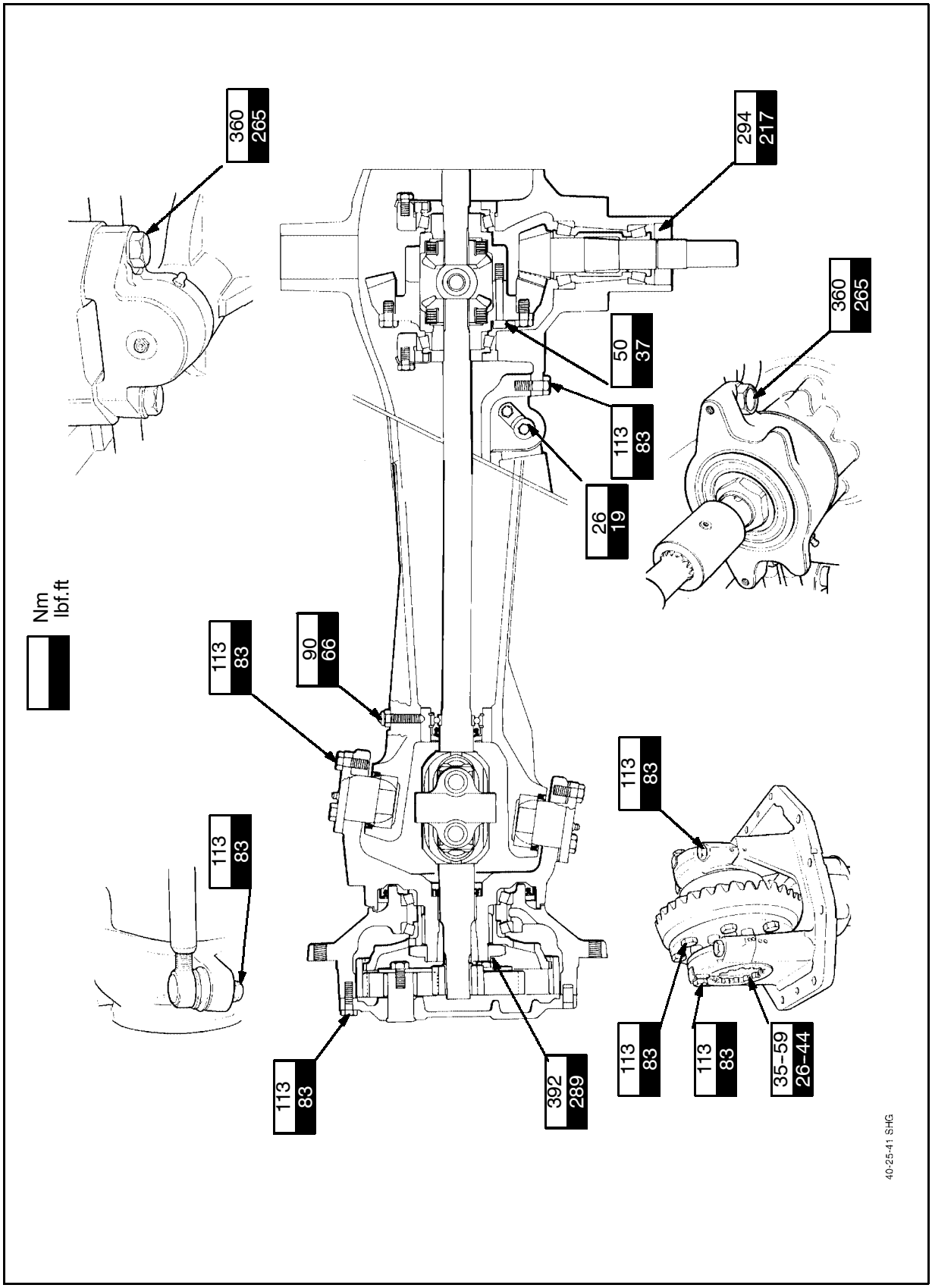

1

TOOLS

Warning - The tools marked below with an **(X)** are **ESSENTIAL** for the operations described in this section. To work in safety and obtain the best results whilst saving time and energy, these essential tools should be supplemented by the specific tools listed below and other tools which are to be made from the drawings provided in this manual.

List of specific tools required for the various operations described in this section.

	293460	Front axle overhaul stand.
	291517	Hook for removal-installation of the front differential assembly.
	293743	Overhaul support for front axle differential casing.
X	**293878**	Wrench for threaded adjustment ring of front bevel drive pinion.
X	**293391**	Pinion bearing adjustment tool.
X	**293510**	Universal gauge for pinion bearing adjustment.
	293400	Universal gauge for positioning of front bevel drive pinion.
X	**293665**	Wrench for front differential case bearing adjustment nut (models 85 hp and 95 hp).
X	**293880**	Wrench for front axle wheel hub bearing retaining nut
X	**293882**	Pair of grips for removal of front axle hub bearings.
	292888	Dowels (M 12 x 1.25) for front axle and cover.
	293812	Dowels (M 16 x 1,25) for removal/installation of front axle wheels.
X	**293857**	Front axle pivot pin removal tool.
X	**292161**	Front axle pivot bearing outer ring removal tool.
X	**292220**	Tool for measurement of rolling drag torque of front axle bearings.
	293889	Guide for installation of axle shafts on stub axle housing
	292870	Universal kit for testing oil pressure for front axle diff. lock engagement.

LOCALLY FABRICATED TOOLS

Front pinion shaft holding tool -
fabricate from 4WD shaft coupling

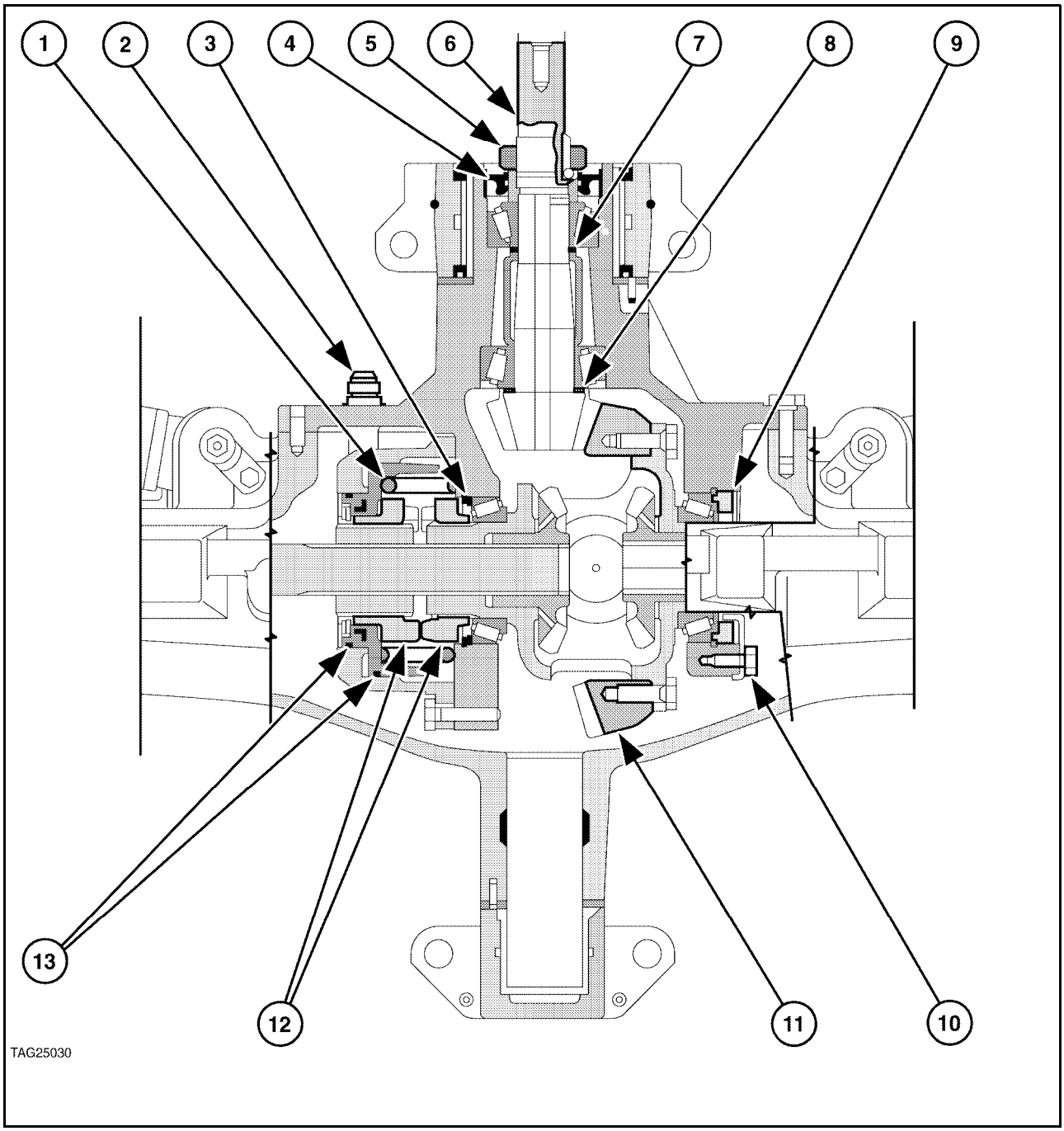

Hydraulic Diff Lock 2

1. Diff lock return spring
2. Diff lock hydraulic feed
3. Backlash shim
4. Pinion oil seal
5. Pinion nut
6. Pinion
7. Pinion bearing preload shim
8. Pinion depth shim
9. Crown wheel preload adjusting ring
10. Lock tab
11. Crown wheel
12. Dog clutch
13. Piston oil seals

DESCRIPTION AND OPERATION

The front axle is centrally pivoting with the pivot and the drive shaft coaxial with the longitudinal axis of the tractor. The drive shaft has no universal joints.

The differential has two planet gears; drive is transmitted to lateral epicyclic final drive units (installed in the wheel hubs) through universal joints which do not require any maintenance.

Two differential locks are available:

- Self locking with friction plates on units with 8 × 2 or 16 × 4 transmissions.
- Electro-hydraulically engaged dog clutch.

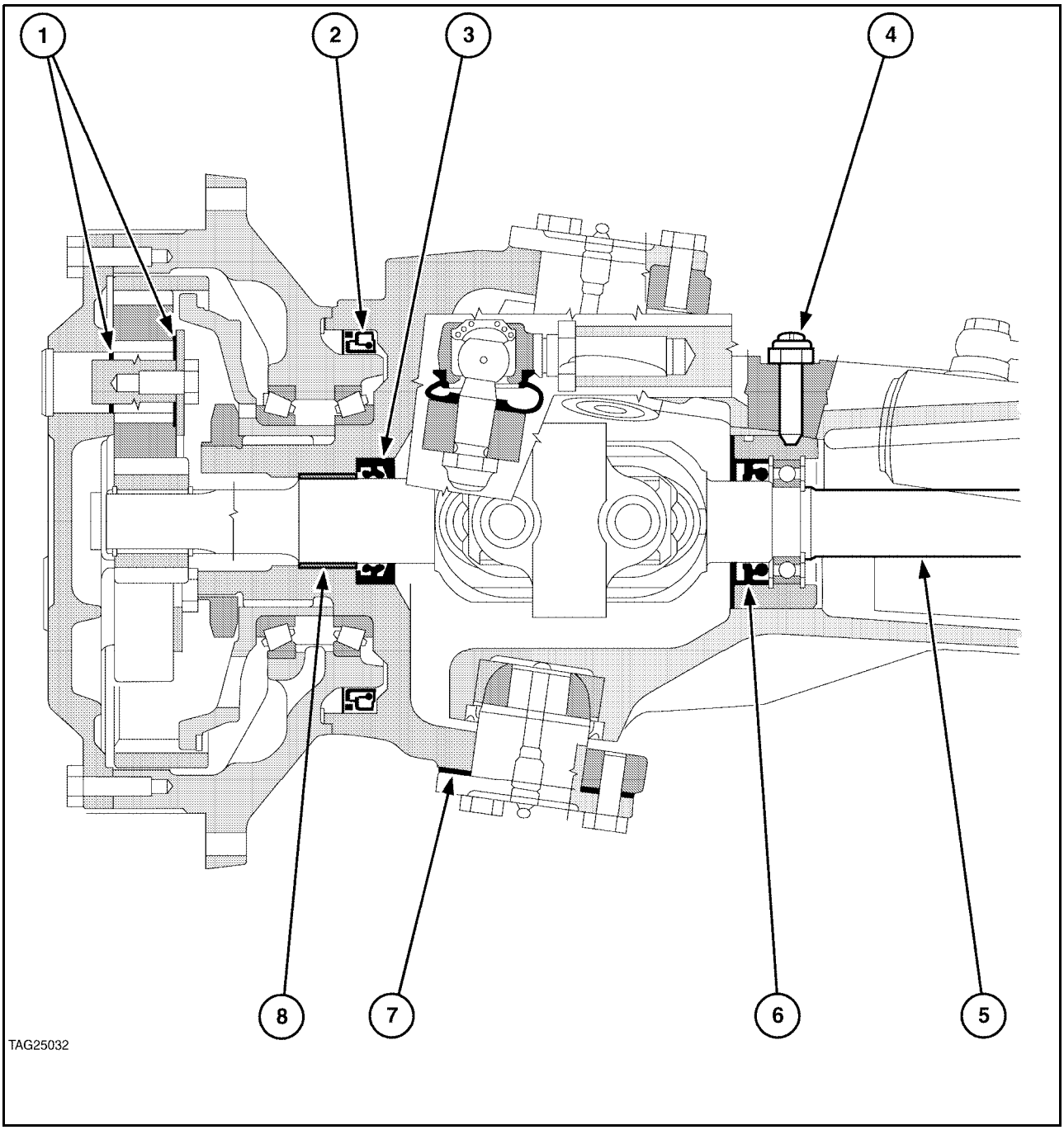

Hub 3

1. Driven gear shims
2. Cassette oil seal
3. Hub axle shaft oil seal
4. Axle shaft securing bolt
5. Axle shaft
6. Axle shaft oil seal
7. Swivel pin shims
8. Axle shaft bush

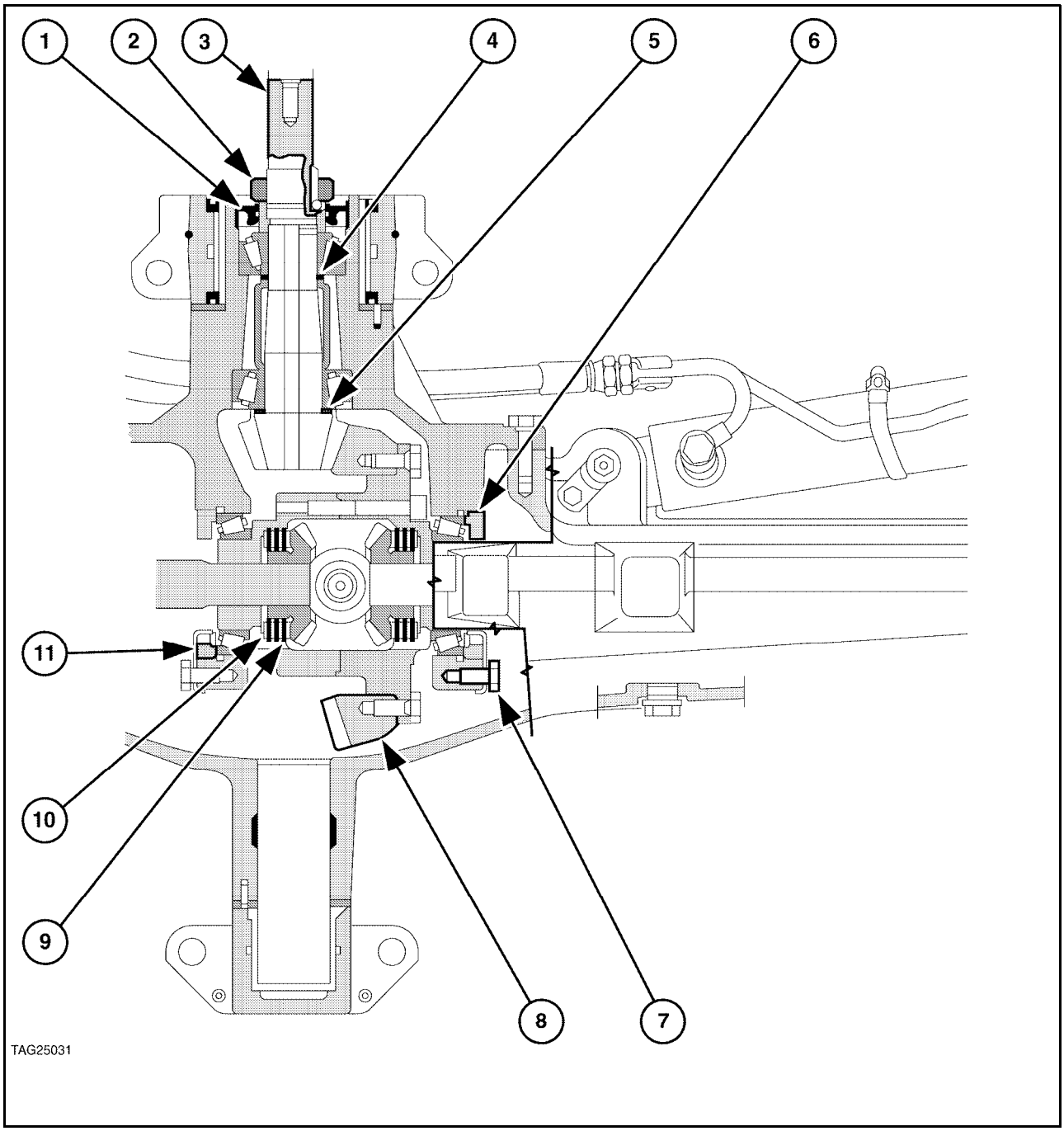

Auto Lock Diff Lock 4

1. Pinion oil seal
2. Pinion nut
3. Pinion
4. Pinion bearing preload shim
5. Pinion depth shim
6. Crown wheel preload adjusting ring
7. Lock tab
8. Crown wheel
9. Friction plate
10. Steel separator plate
11. Crown wheel backlash adjusting ring

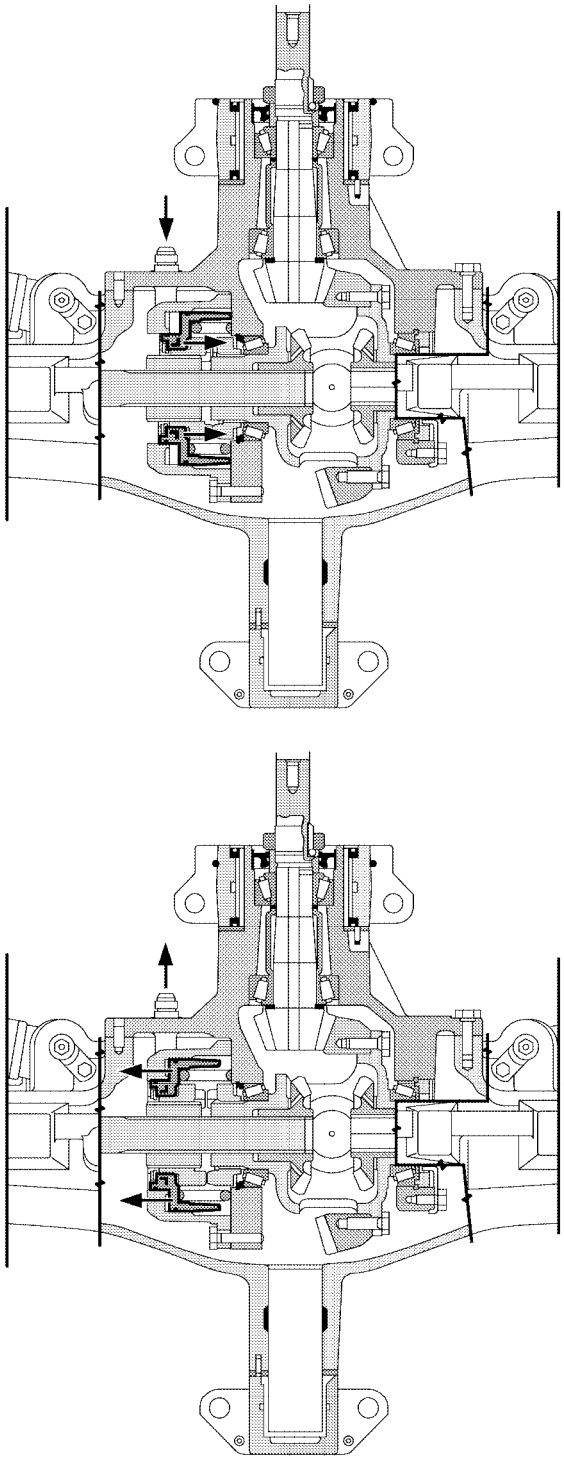

TAG25034

5

Front differential lock operation

When energised the solenoid valve sends oil behind the piston to engage the dog clutch

When de-energised the return spring disengages the dog clutch.

FRONT AXLE HYDRAULIC DIFFERENTIAL LOCK
FAULT DIAGNOSIS

Problems	Possible causes	Remedies
The diff. lock fails to engage.	1. Transmission oil level insufficient.	Top up oil level.
	2. Oil filter clogged.	Replace filter.
	3. Hydraulic pump defective.	Overhaul or replace pump.
	4. Diff. lock control switch defective.	Replace switch.
	5. Solenoid valve electrical fault: loose, damaged connections or defective contactor.	Make good electrical connections and replace defective parts.
	6. Diff. lock control solenoid valve stuck in discharge position.	Overhaul or replace the solenoid valve.
	7. Oil leaking past seals with consequent loss of pressure: piston seals or delivery pipe seals.	Replace all defective seals.
Diff. lock fails to disengage.	1. Diff. lock solenoid valve stuck in delivery position.	Overhaul or replace the solenoid valve.
	2. Diff. lock release spring broken.	Replace spring.
	3. Solenoid valve electrical fault: loose, damaged connections or defective contactor.	Make good electrical connections and replace defective parts.

COMPLETE FRONT AXLE
Removal- installation

DANGER

Lift and handle all heavy parts using suitable lifting equipment with a sufficient lifting capacity.
Check that the assemblies or parts are held firmly and supported by suitable slings and hooks. Make sure nobody is standing near to the load.

Proceed as follows:

Note - The front axle assembly can be removed from the tractor either with or without previously removing the drive shaft. The description below refers to removal of the front axle with the drive shaft installed on the tractor. For removal of the drive shaft refer to sect. 6.

Depending upon the work to be conducted on the axle it may be beneficial to slacken certain tight nuts prior to removal of the axle from the tractor.
e.g.

- Wheel hub bearing nuts, left and right hand
- Pinion lock nut
- Track rod end nuts

1. Disconnect the negative battery lead (1).

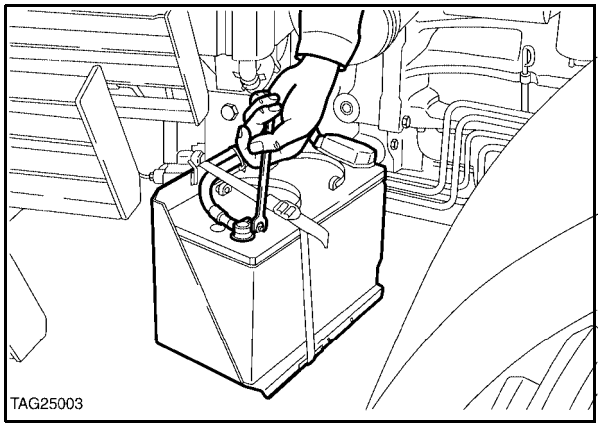

6

2. Unscrew bolts (1) and remove the front mudguard supports (2).

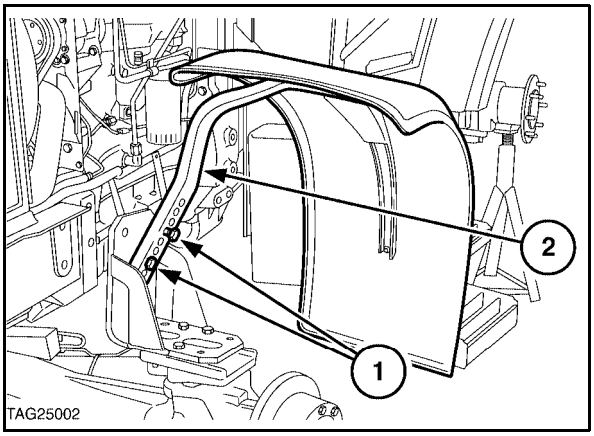

7

3. Attach nylon slings to the front ballast, remove the locking pin, lift the ballast clear of the tractor and place it in a safe position.

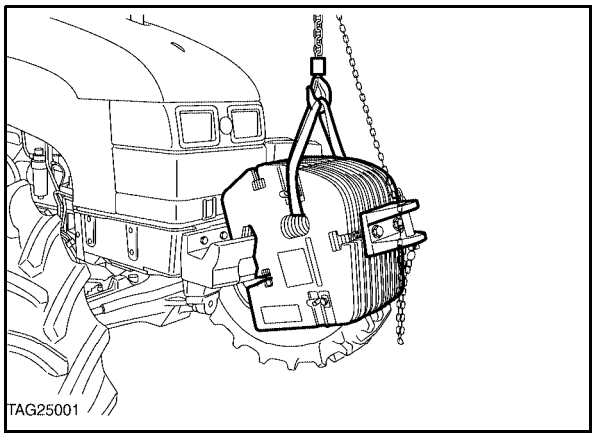

8

4. Unscrew bolts (1) and remove the drive shaft guard.

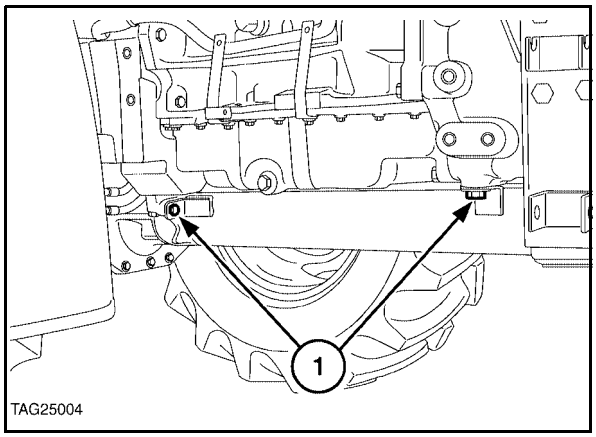

9

5. Remove the bolt, and slide the sleeve (1) in the direction of the arrow and detach the drive shaft from the front axle.

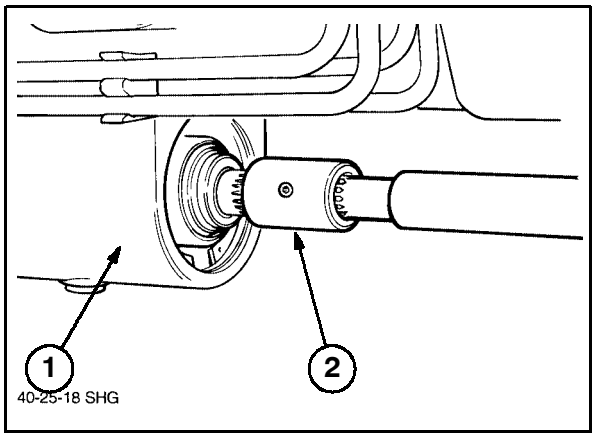

10

6. Insert wedges (1) into either side of the axle pivot to stop the axle from oscillating and jack (2) or hoist the tractor.

7. Lift the tractor and place a stand (3) under the sump pan.

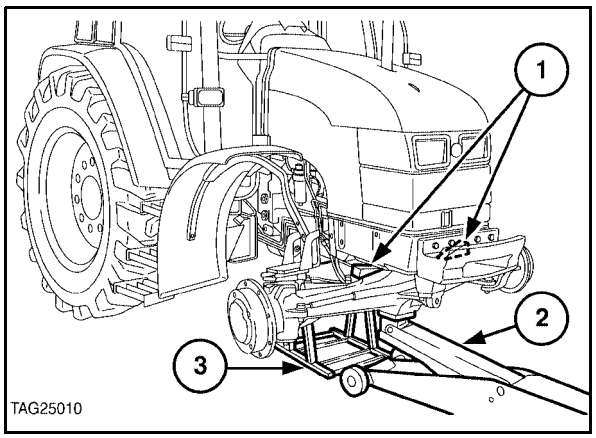

11

8. Disconnect steering pipes.

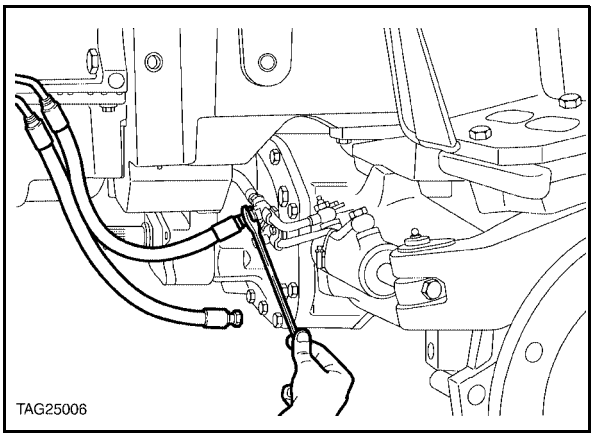

12

9. Unscrew the union (1) of the front diff. lock and detach the flexible hose.

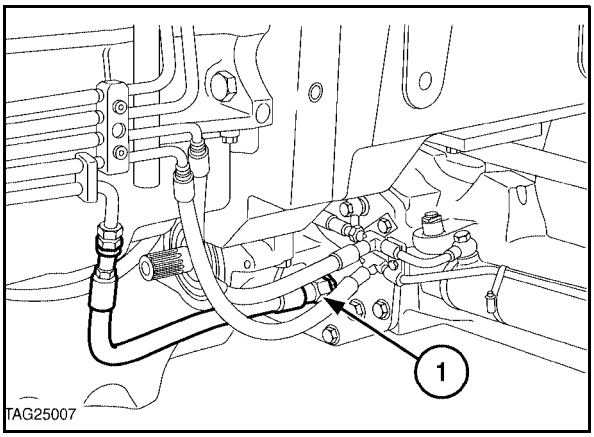

13

10. Unscrew the wheel bolts and remove the front wheels.

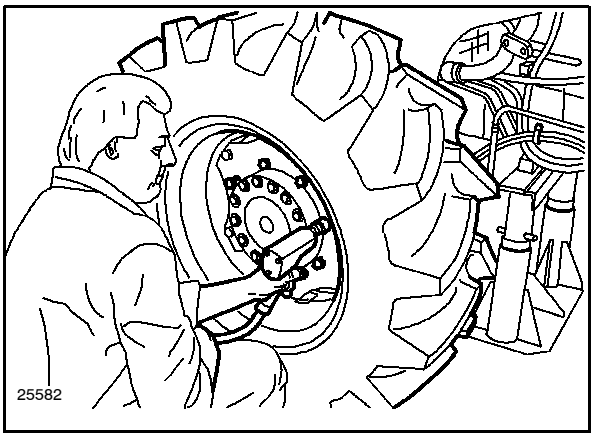

14

11. Unscrew the front and rear retaining bolts (1) of the front axle support.

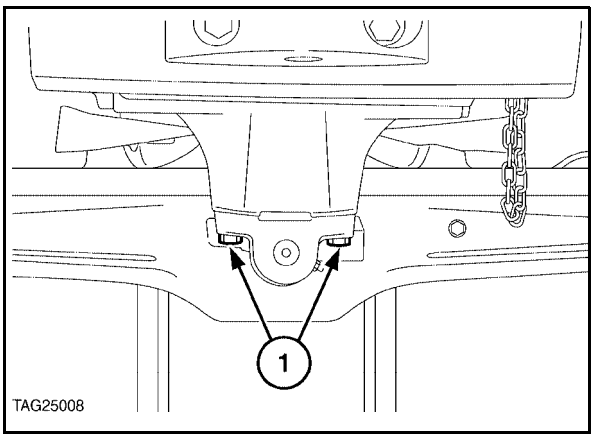

15

12. Using a lifting hook and two nylon cables (one for each side) detach the front axle from the tractor.

13. Refit the front axle following the instructions below.

WARNING

Always use appropriate tools to align fixing holes. NEVER USE YOUR FINGERS OR HANDS.

— Refit the axle, and bolt the front and rear supports in position.

— Reconnect the diff. lock pipe and the power steering pipes.

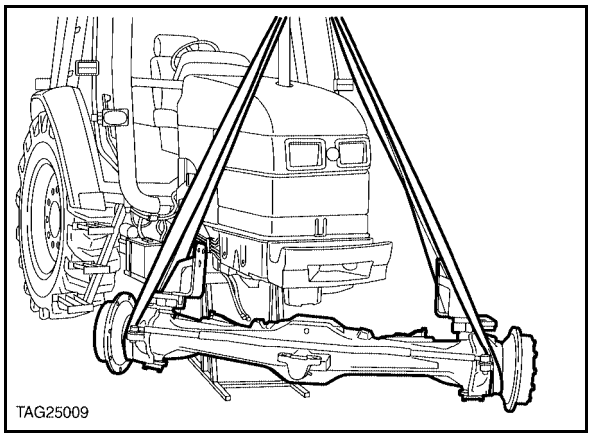

16

— Fit the front wheels.

— Raise the front of the tractor using the hoist or jack to remove stand.

— Reconnect the drive shaft and refit the drive shaft guard.

— Refit the mudguards.

— Refit front weights to the tractor and secure the lock pins.

— Reconnect the negative battery lead.

— Adhere to the tightening torques indicated on page 4.

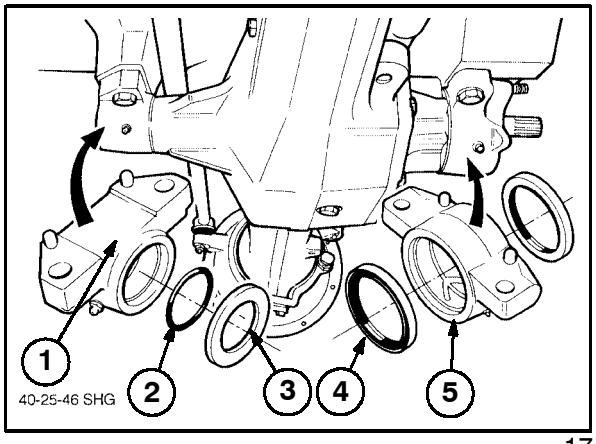

17

1. Front support pillar
2. 'O' Ring
3. Spacer
4. Seal
5. Rear support pillar
6. Seal

FRONT AXLE
Removal installation

WARNING

Handle all parts with care.
Do not insert hands or fingers between one part and another. Wear suitable safety clothing, i.e. safety goggles, gloves and shoes.

Note - For overhaul, the front axle should be mounted on stand n. **293460**.

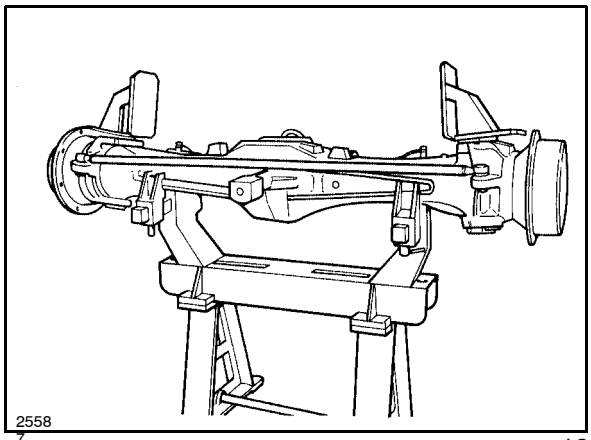

18

1. Unscrew plug (1) and drain off the oil from the axle casing.

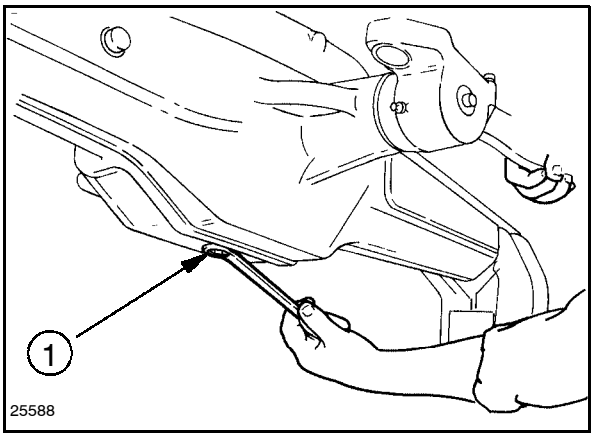

19

2. Unscrew plug (1) on the left-hand epicyclic final drive casing and drain the oil; repeat the same operation on the right-hand casing.

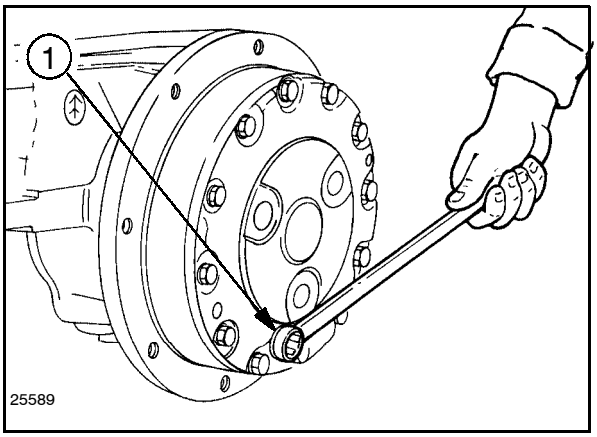

20

3. Remove the rear support (1) of the front axle; remove the front support and retrieve the washer.

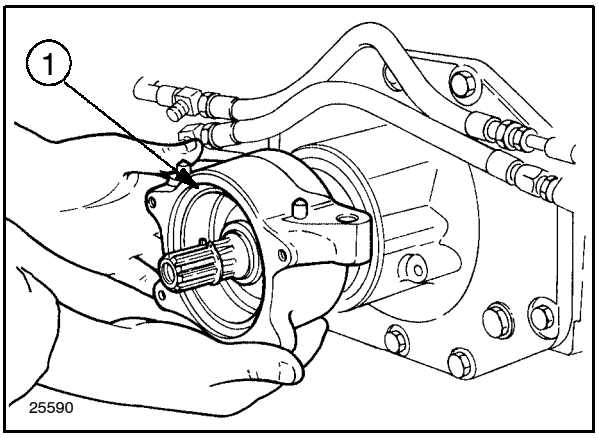

21

4. Unscrew the two track rod retaining bolts (1).

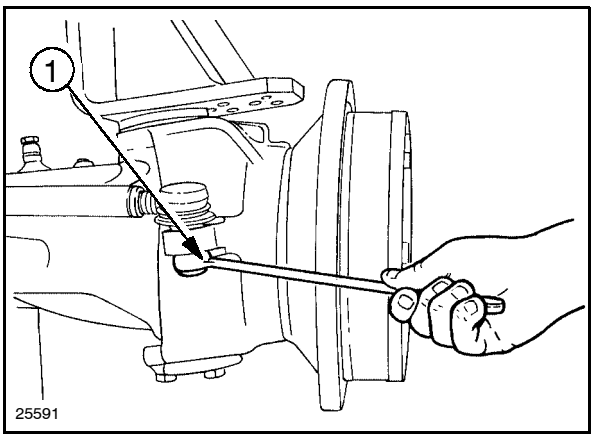

22

Prior to removal of the track rod ensure that the hubs will not rotate on their swivels, causing the axle to fall from its stand.

5. Using a removal tool, withdraw the pins from their bores in the stub axle housing, and remove the track rod.

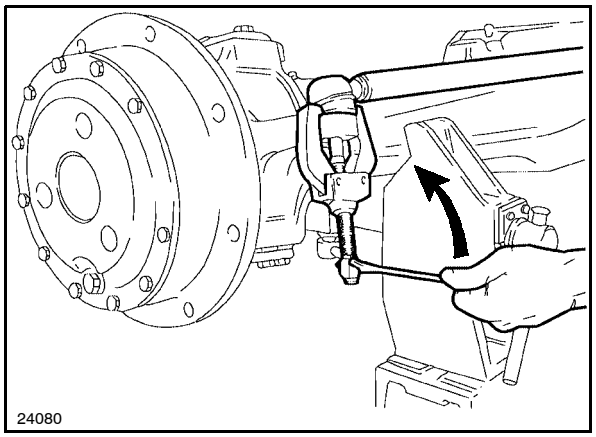

23

6. Remove the circlips (2) from the cylinder rod pivot pins, unscrew the pin retaining bolts of the cylinder (1), withdraw the pins and detach the two cylinders.
   Recover the four pins, washers, spacers and cylinders complete with hoses.

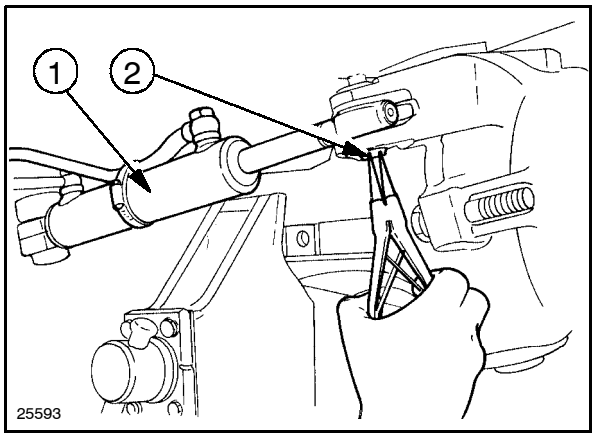

24

7. Unscrew the retaining bolts of the left-hand final drive casing cover (1). Screw in the two studs **292888** (2) and, using a slide hammer screwed into the oil drain plug, detach the cover (1) from the casing.

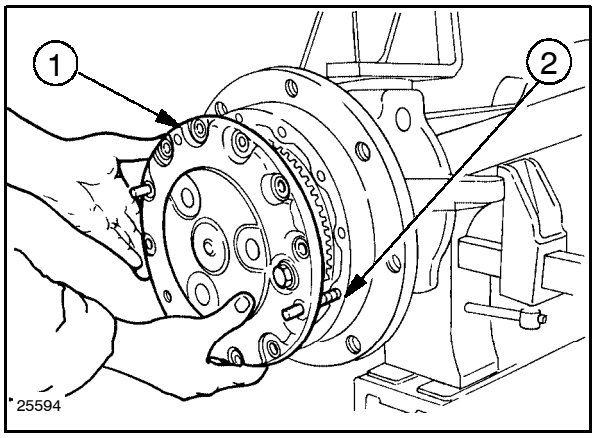

25

8. Remove the outer circlip (1) securing the driving gear (2) and remove the gear.

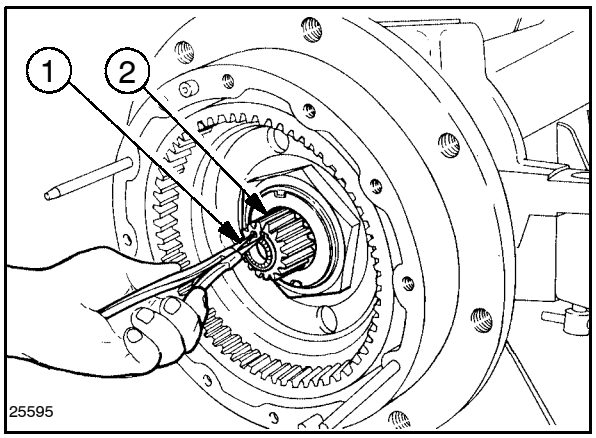

26

9. Remove the inner circlip (1) securing the driving gear (2, fig. 28).

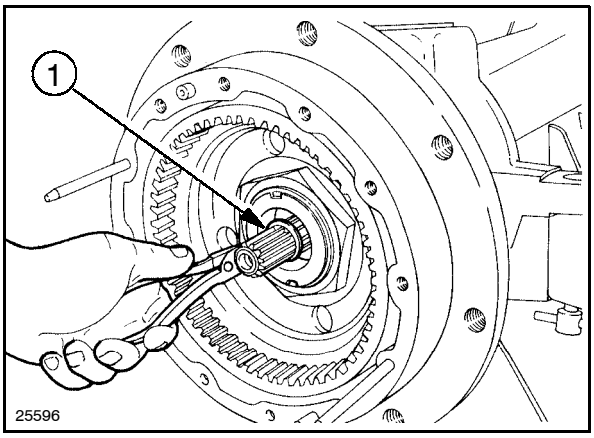

27

NOTE: *If desired it is possible to remove the hub and stud axle housing together, without the need to remove the wheel hub bearing lock nut.*

10. Remove the staking (1) on the wheel hub bearing lock nut (2).

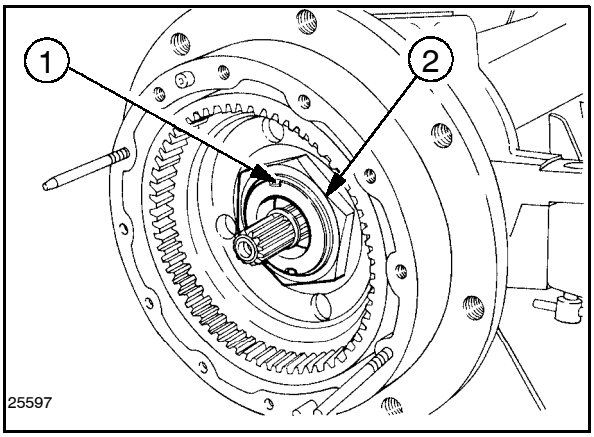

28

11. Remove the wheel hub bearing lock nut using special tool 293880.

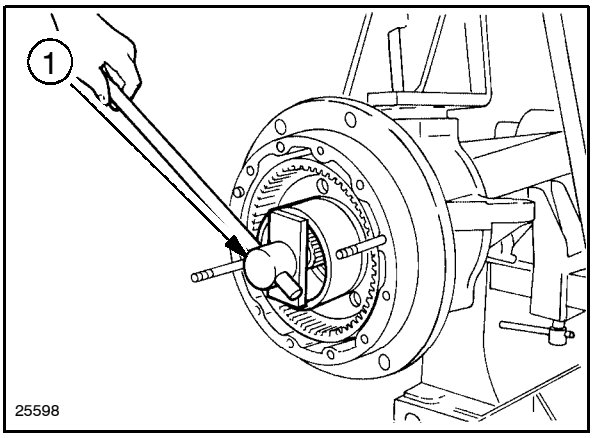

29

12. Remove the wheel hub (1) with the ring gear (2).

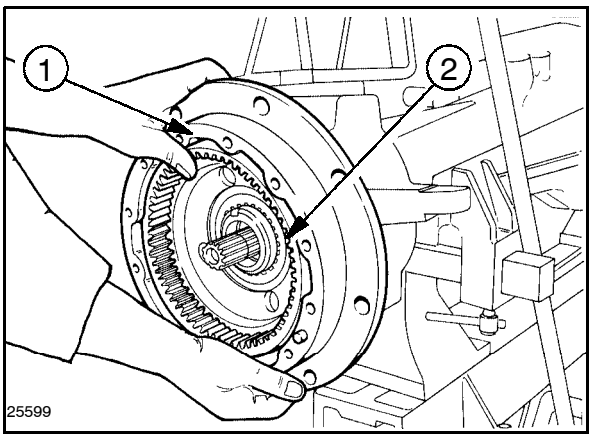

30

13. Unscrew the three retaining bolts (1) of the lower pin of the stub axle housing. Recover the lower pivot pin and the adjustment shims.

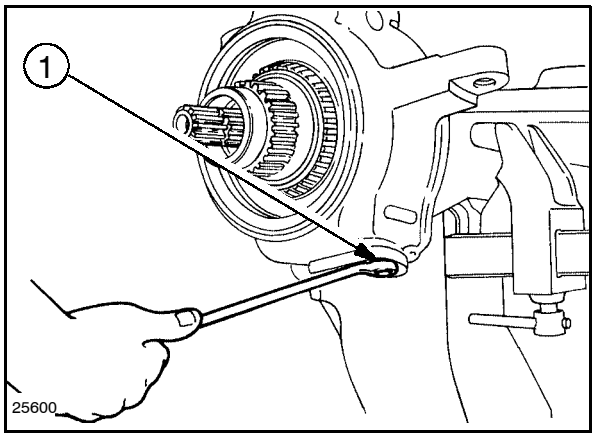

31

14. Unscrew the four retaining bolts (1) of the mudguard bracket and remove the bracket.

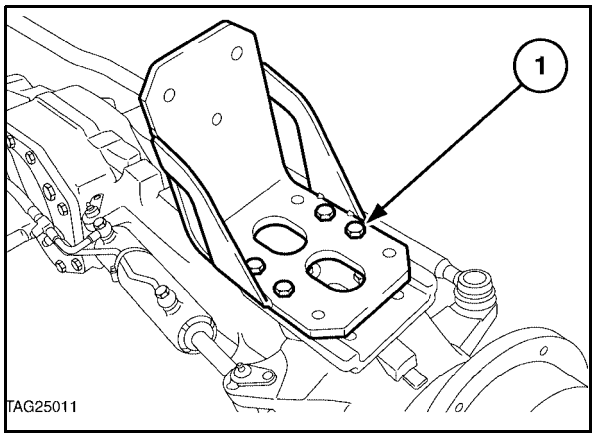

32

15. Unscrew the three retaining bolts of the upper pivot pin.

16. Withdraw the upper pivot pin (1) and detach the stub axle housing (2).

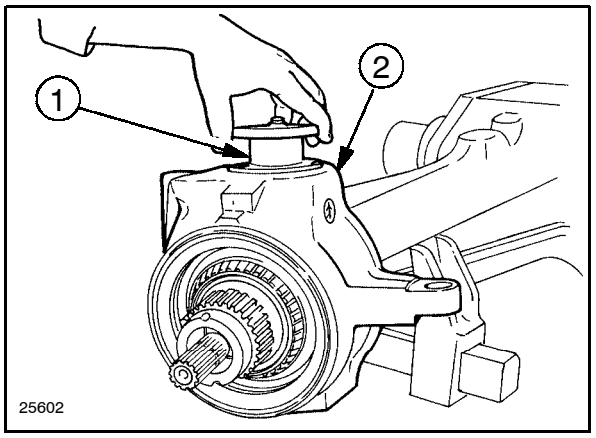

33

17. Unscrew the retaining bolt (2) of the axle shaft (1).

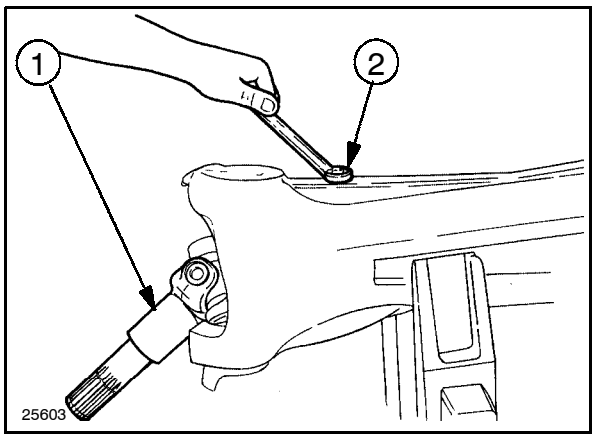

34

18. Remove the axle shaft from the casing (1, fig. 15).

19. To disassemble the right-hand final drive unit, follow the same procedure as the left hand final drive unit.

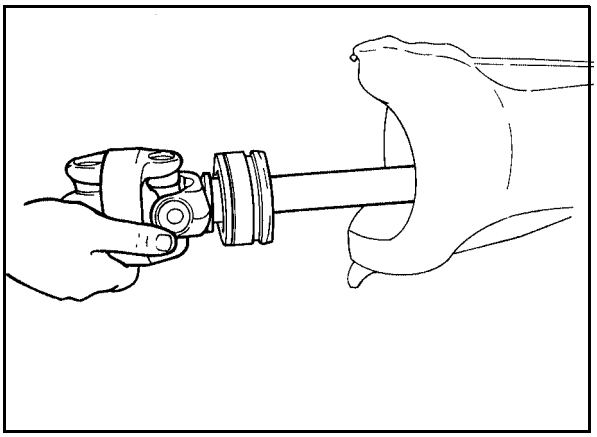

35

20. Unscrew two of the bolts fixing the bevel drive-differential support to the axle casing. Screw in the two dowels **292888** (1). Remove the remaining bolts and separate the differential support from the axle casing. Attach a hoist (2) to the support and remove the differential support (3) from the axle casing.

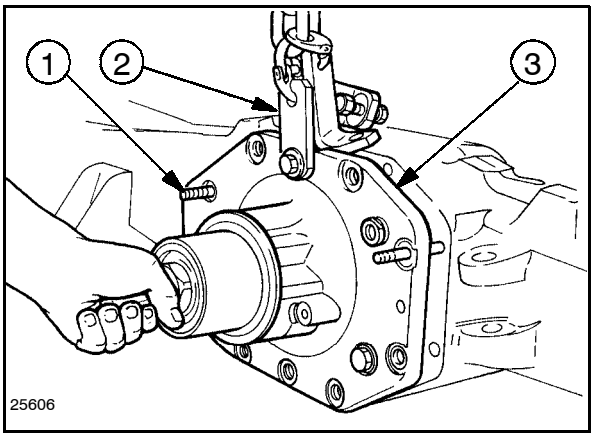

36

21. Install tool **293743** (1) in the vice on the work bench. Bolt the differential support on to the tool detach the lifting hoist.

22. Unscrew bolt (2) and remove the ring nut lock tab (3). Remove the internal diff. lock control pipe.

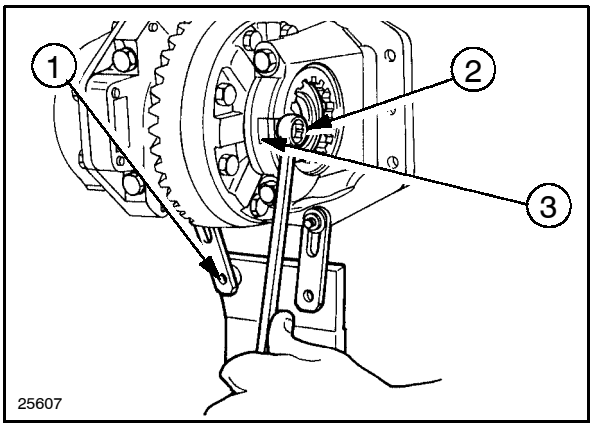

37

23. Remove the two bolts securing the external bell housing (1) of the diff. lock, and fit in their place two bolts with minimum length 70 mm. Gradually unscrew the four remaining bolts from the external bell housing of the diff. lock so as to allow the diff. lock release spring to gradually extend.

Note - It is necessary to fit two bolts because the normal bell housing bolts are not sufficiently long to allow the spring to extend to its full free length.

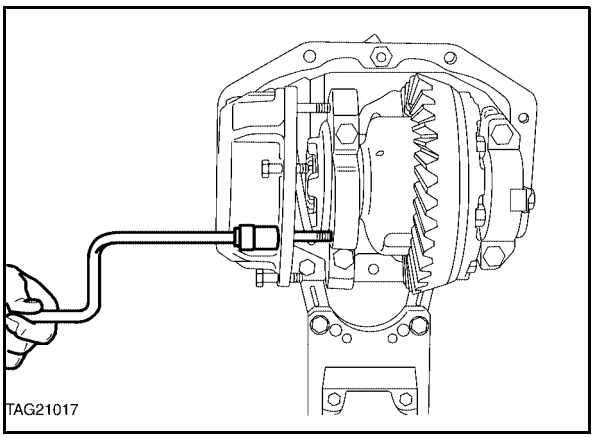

38

24. Unscrew the last two 70 mm bolts. Remove the bell housing (1), the helical spring (2) and the diff. lock piston.

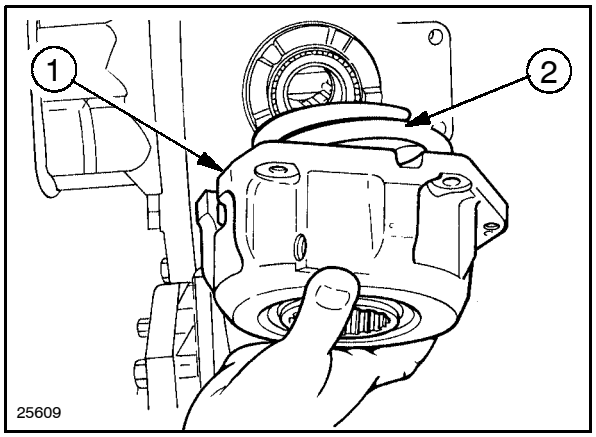

39

25. Remove circlip (2) and remove the diff. lock sleeve.

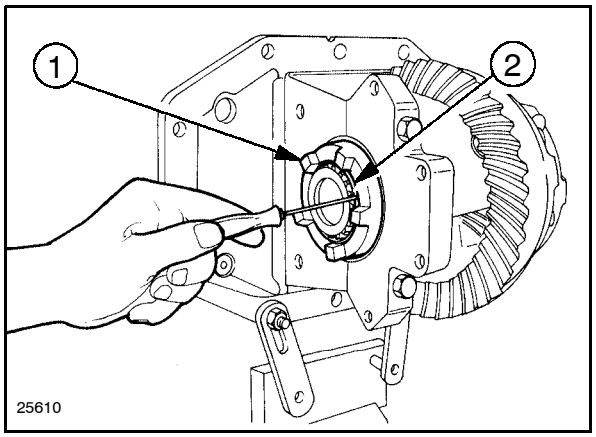

40

26. Remove the circlip securing the diff. lock piston, and recover the sliding sleeve with the two thrust washers.

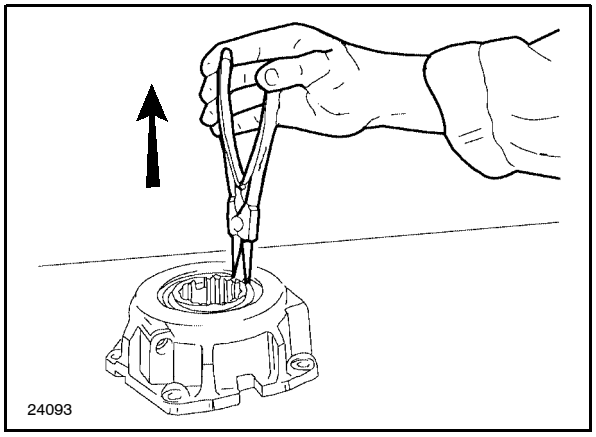

41

27. **Gently** tap the piston out of the clutch bell housing.

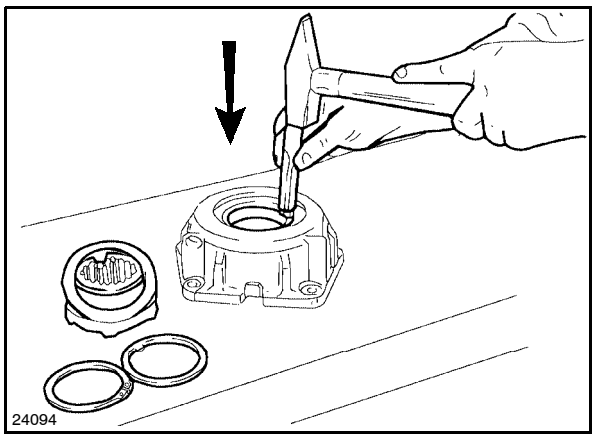

42

28. Unscrew the two bolts (2) of the crown wheel-differential support caps (1).

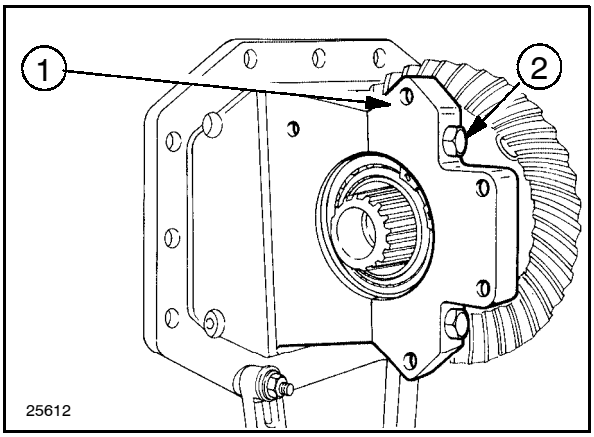

43

29. Remove the crown wheel-differential assembly (2) from the housing (1).

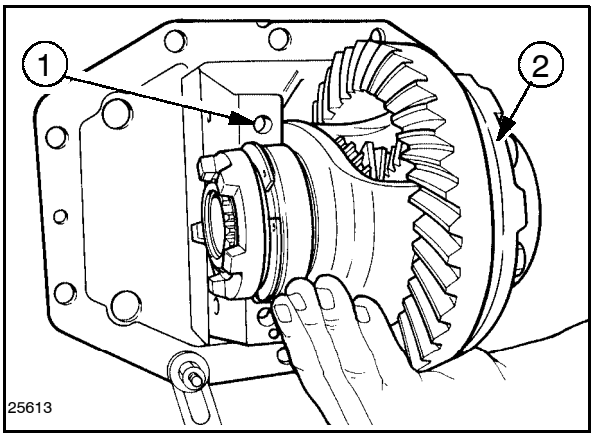

44

30. Straighten the locking tab on the splined shaft lock nut (1).

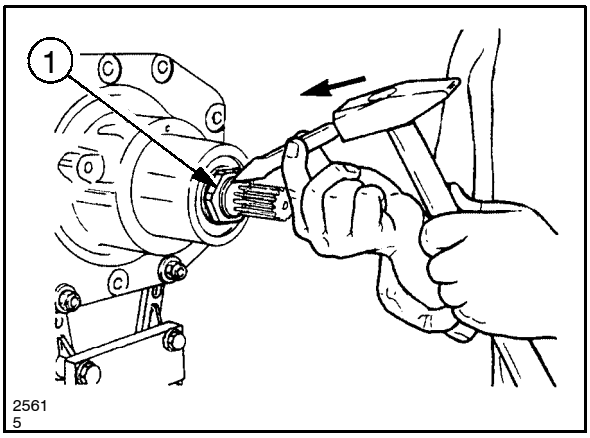

45

31. To loosen the pinion nut it is necessary to manufacture a tool to hold the pinion shaft. This can be manufactured by welding a suitable 20 mm nut to the end of a drive shaft coupling 81873108.

Locally Manufactured Pinion Shaft Tool

1. Coupler Part No 81873108
2. 20 mm Nut

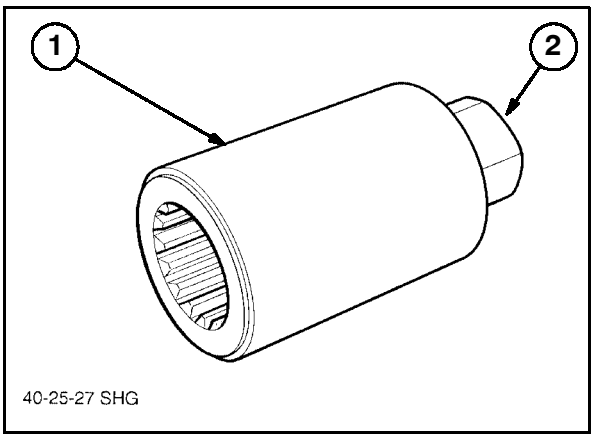

46

32. Unscrew the nut using wrench **293878** (1) while holding the bevel drive pinion shaft against rotation with the locally fabricated tool.

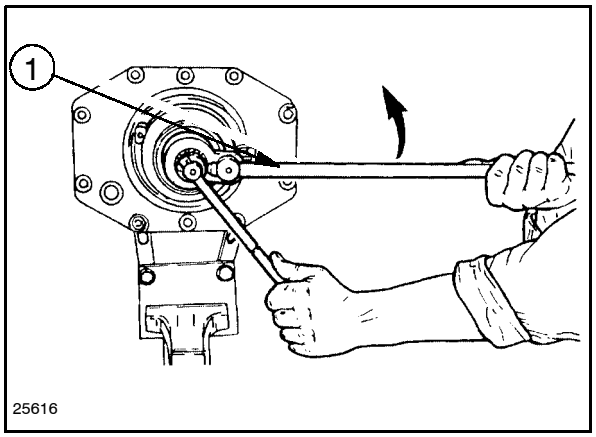

47

33. Remove the locking ball from the sleeve.

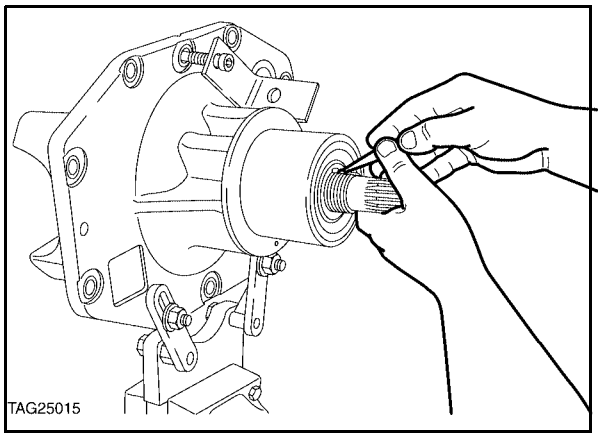

48

34. Withdraw the pinion shaft (1) from the rear of the casing and remove the spacer, the adjustment shims and the bearing.

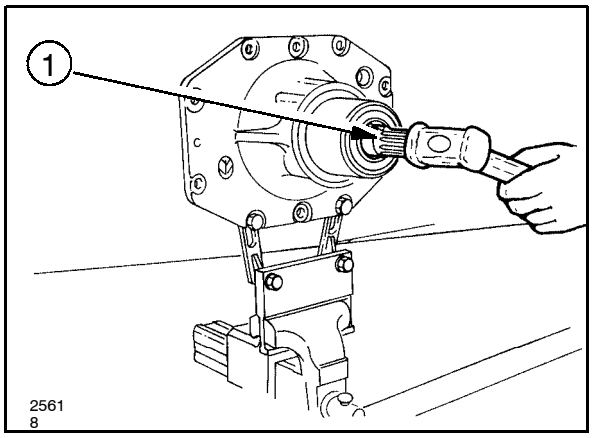

49

35. Remove the dust seal, the oil seal (1) and the rear bearing.

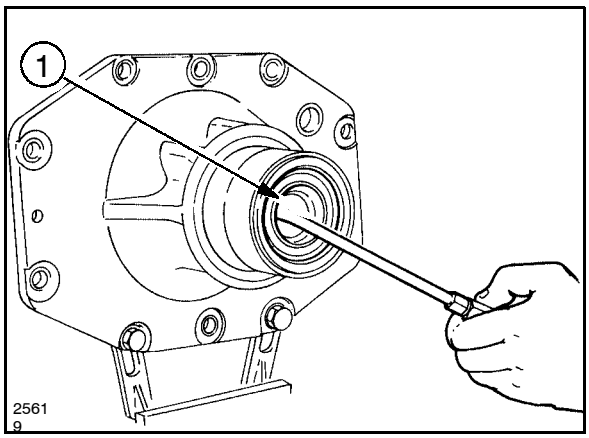

50

FRONT AXLE DIFFERENTIAL

Overhaul

Hydraulic Differential lock

In case of differential assembly overhaul it is necessary to adjust the backlash between the teeth of the planet pinions and side gears.

Proceed as follows:

1. Thoroughly clean the components of the differential to remove any traces of oil which would otherwise prevent accurate backlash measurement.

2. Install the two side gears without thrust washers.

3. Fit the planet gears complete with thrust washers and pins and screw the pin retaining bolts in by a few turns to hold the pins in place.

4. Position a dial gauge on the differential housing.

5. Move the left-hand the side gear to bring it into full contact with the planet pinion and then push it up against the differential housing, reading the endfloat (G_s) on the dial gauge.

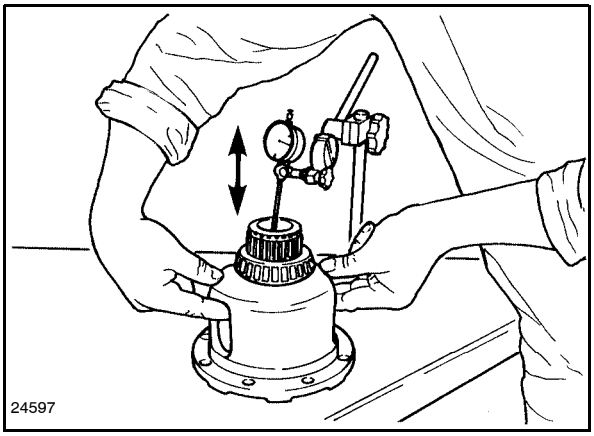

51

6. Repeat the above operations to measure the endfloat on the right-hand side gear (G_d).

   The endfloat should be **0.25 mm**.
   Therefore the shims to be inserted in the differential housing are given by:

   $S_{L.H.} = G_s - 0.25$ mm for the left-hand side gear;

   $S_{L.H.} = G_d - 0.25$ mm for the right-hand side gear.

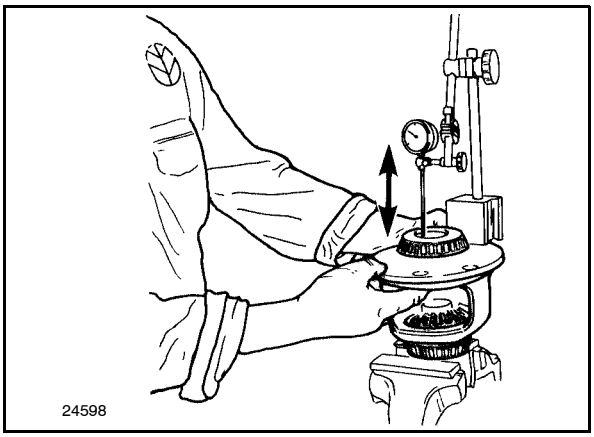

52

7. Install shims as near as possible to the calculated value, and, using a dial gauge and following the procedure described above, check that the endfloat of the left and right-hand side gears is approximately 0.25 mm.

8. Reassemble the front axle adhering to the following instructions:

— Refer to the illustrations on pages 6, 7 and 8 to check the orientation of the various components.

— Respect the tightening torques prescribed on page 3.

— Carry out the adjustments described on pages 7-27-7-24.

— Install the rear bearing, the seal, the dust seal, the adjustment shims, the spacer and the bevel drive pinion shaft complete with front bearing.

— Insert the detent ball, tighten the bevel drive pinion lock nut and secure in position by staking.

— Install the crown wheel-differential assembly, the support caps and tighten the relative bolts.

— Install the diff. lock sleeve and the relative lock ring.

— Install the diff. lock control piston with new 'O' rings, the spring, the bell housing and tighten the respective bolts. Finally fit the locking tab of the lock ring and the internal diff. lock pipe.

— Install the bevel drive-differential housing on the front axle casing and fit the external diff. lock pipe.

— Install the axle shafts and securing bolt.

— Fit the stub axle, the adjustment shims, the upper and lower pivot pins and the mudguard brackets.

— Fit the wheel hub, the ring gear of the final drive unit and the lock ring and tighten to the prescribed torque value, whilst turning the wheel hub to ensure that the bearings are correctly seated.

— Fit the securing and stop circlips, the driving gear and the cover of the final drive unit.

— Fit the pins, washers, spacers and steering cylinders.

— Fit the track rod, the front and rear supports and the oil drain plugs.

— Refill with oil.

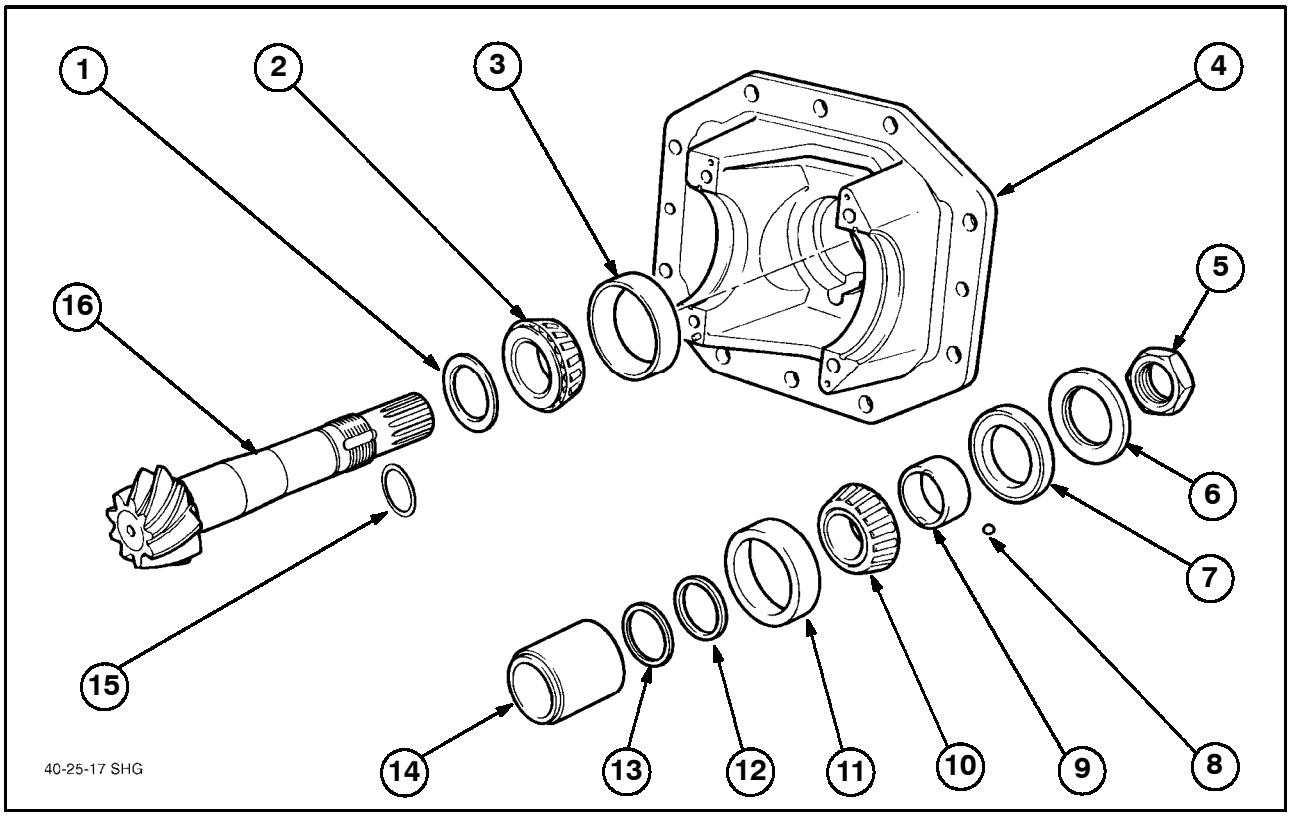

Drive Pinion Components

53

1. Shim (Pinion depth)
2. Bearing
3. Bearing Cup
4. Housing
5. Nut
6. Dust Cap
7. Seal
8. Ball
9. Sleeve
10. Bearing
11. Bearing Cup
12. Shim (Pinion bearing preload)
13. Shim (Pionon bearing preload)
14. Spacer
15. 'O' Ring
16. Pinion

1. Differential assembly
2. Shim (Backlash)
3. Circlip
4. Dog clutch
5. Lock ring

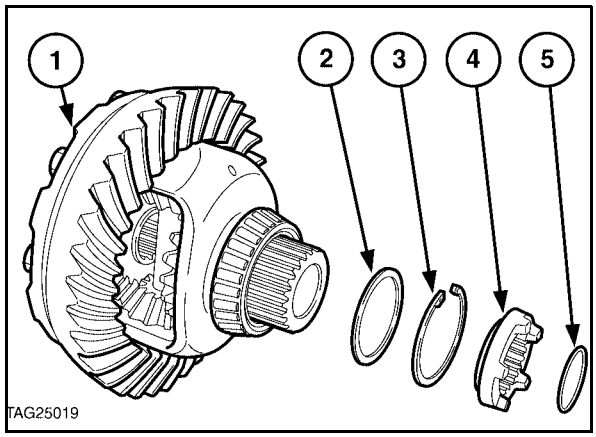

54

1. Dog clutch
2. Thrust washer
3. Return spring
4. Piston 'O' rings ×2
5. Hub
6. Lock ring
7. Circlip

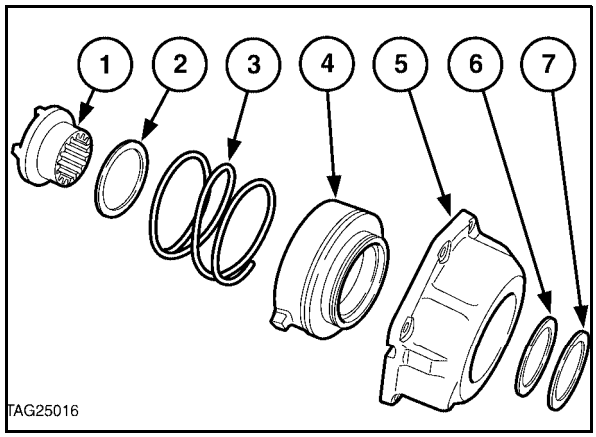

55

STEERING SWIVEL PINS AND BEARINGS
Replacement

In the event that the steering swivel pins prove difficult to remove, proceed as follows.

9. Remove the grease nipples and the steering swivel pin retaining bolts.

10. Fit the bolts (1) of tool **293857**.

11. Fit the plate (2) of the tool and fix it to the three bolts with nuts (5).

12. Fit the central tie bolt (4) screwing it fully into the grease nipple bore on the pin (6).

13. Screw in the nut (3) to drive the pin out of its bore.

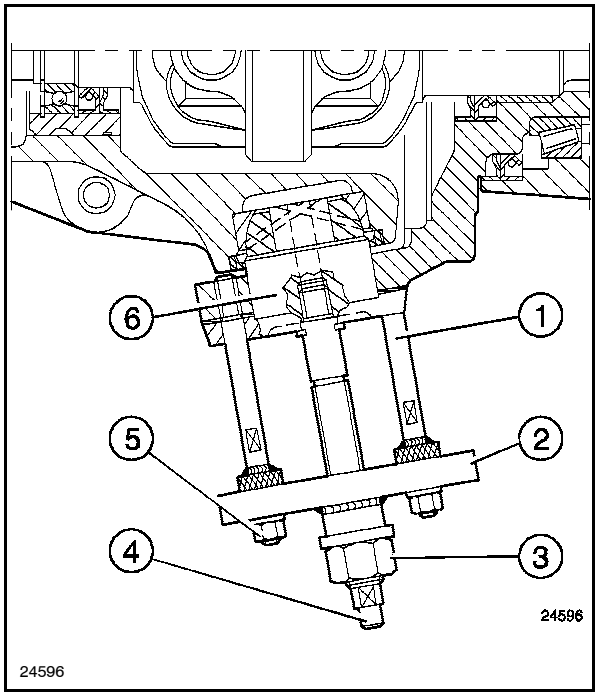

56

14. Using extractor tool **292161** (1) remove the steering swivel bearings.

15. Re-install the steering swivel bearings using a suitable drift.

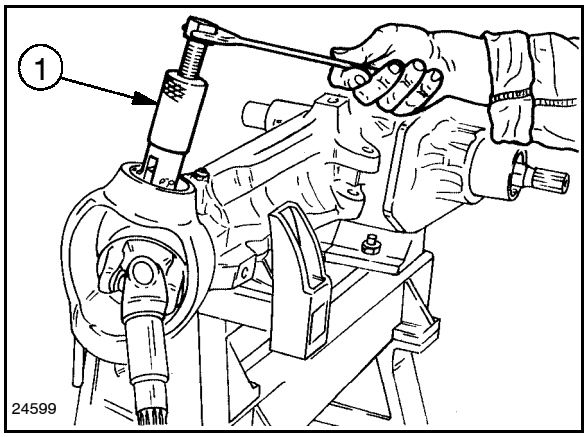

57

STUB AXLE ADJUSTMENT

WARNING

Handle all parts with great care.
Do not put your fingers or hands between one piece and another. Wear suitable safety clothing, i.e. safety goggles, gloves and footwear.

Install the front axle on stand **293460** and proceed as follows.

16. Smear grease on the outer races of the bearings and fit the upper cover, without the shims, and with tool **292220** (2) attached. Tighten the retaining bolts.

Note -To facilitate installation of the swivel pin, we recommend that guide **293889** (1) is installed on the axle shaft.

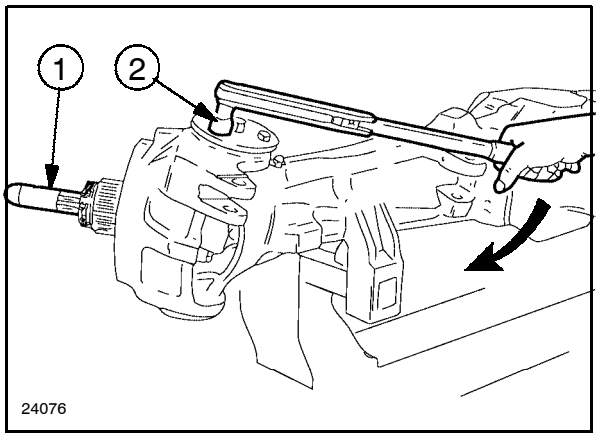

58

17. Fit the lower cover without shims, lubricate the three retaining bolts with engine oil.

18. Gradually,tighten the lower cover bolts equally whilst rotating the casing to allow the excess grease to escape.

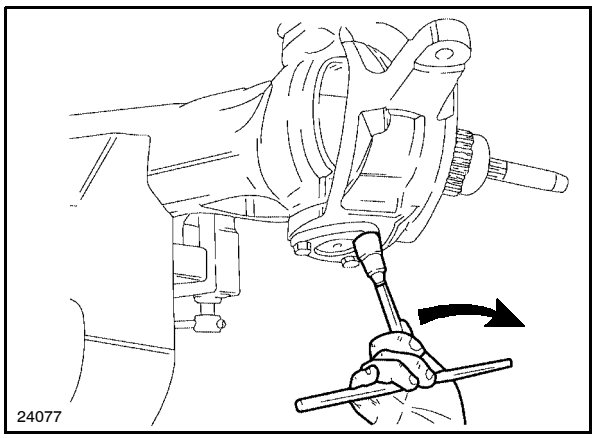

59

19. Using a torque wrench and tool **292220** (1), check that the torque required to rotate the casing is 15 - 25 Nm. Adjust the three bolts until the correct torque is achieved.

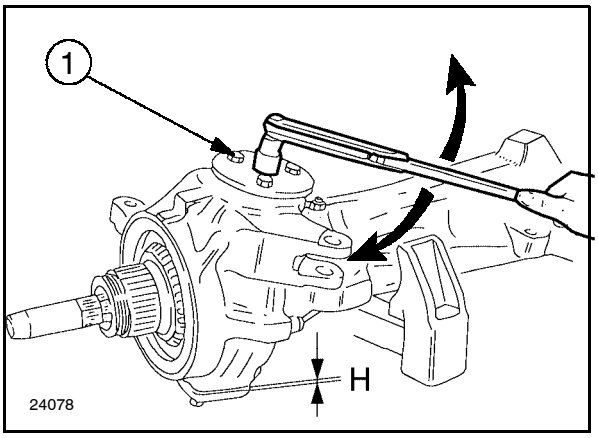

60

20. Measure the gap (H) created between the lower cover and the casing in three places.

21. Calculate the average of the three values measured. The total thickness of the adjustment shims to be fitted under the lower cover is **Shim S_3= H - 0.20 mm** .
If necessary, round up the value to the next 0.05 mm.

22. Insert shims under lower swivel cover. Torque to 113 Nm.

23. After having rotated the casing a few times to allow the components to bed down, check that the torque necessary to rotate the casing is 118 - 147 Nm.

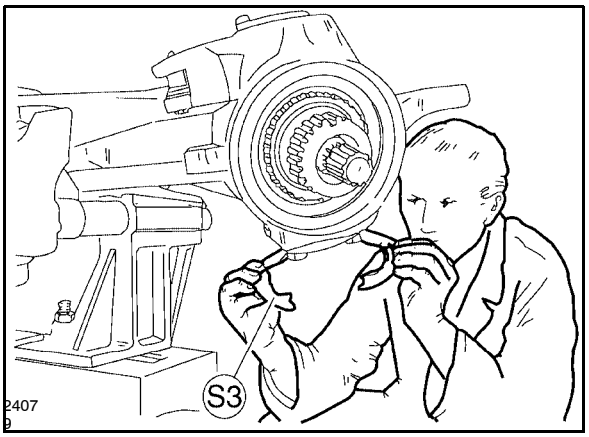

61

24. If the torque value measured is greater than the prescribed value, increase the thickness of the shims, if it is less than the prescribed value, reduce the thickness of the shims.

25. Remove tool 292220, fit the grease nipples in the upper and lower covers and grease the assembly.

BEVEL DRIVE ADJUSTMENTS
Pinion Bearing Preload Shimming

WARNING

Handle all parts with care.
Do not insert hands or fingers between one part and another. Wear suitable safety clothing, i.e. safety goggles, gloves and footwear.

Proceed as follows.

26. If necessary remove bearing from pinion.

27. Clamp tool **293391** (1) in the vice, fit the inner races of the bearings (2 and 4) and the bearing spacer (3) and secure the nut on the tool.

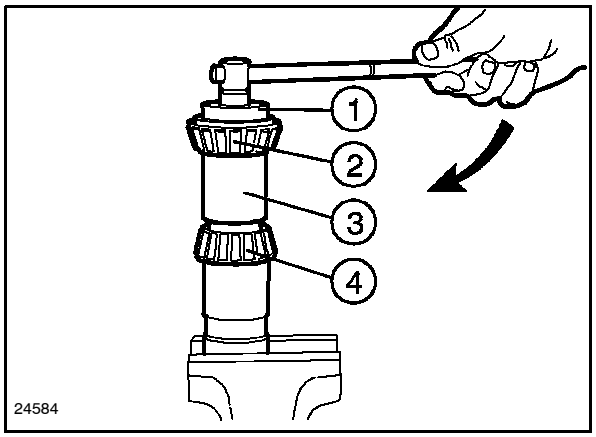

62

28. Using a depth micrometer, measure distance (H_1) between the upper surface of the tool and the central threaded pin of tool **293391** (1).

29. Disassemble the above parts, lubricate the bearings with oil and then re-assemble the parts, excluding the bearing spacer, in the differential housing. Hold the differential housing in the vice using tool **293743**.

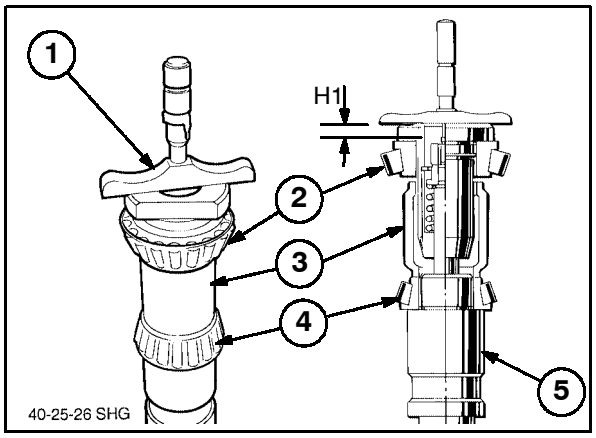

63

30. Tighten a nut of tool **293391** (1), while turning the tool to ensure that the bearings are seated correctly.

31. Using a depth micrometer, measure distance (H_2).

32. The thickness of the adjustment shim required is calculated by:

Shim S_1 = H_2 - H_1 + 0.05 mm

If necessary, round the value thus obtained up to the nearest 0.05 mm.

Leave tool in differential housing for pinion depth measurement.

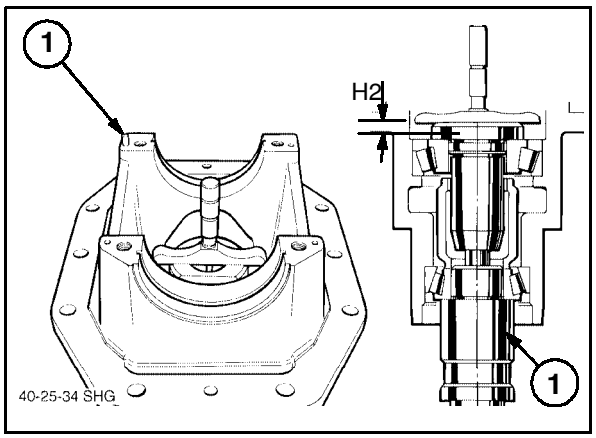

64

Pinion To Crown Wheel Shimming Procedure

The pinion to crown wheel shimming procedure calculates the thickness of shims **S2**, positioned beneath the shoulder of the pinion gear to ensure that the theoretical conical point of the pinion aligns with the centre of the differential crown wheel.

Pinion Shimming Dimensions

H4 Dimension from Pinion Bearing to Centre line of Differential Casing

H3 115 mm Manufacturers Pinion Dimension ± C (Correction Factor)

S2 Shim Thickness

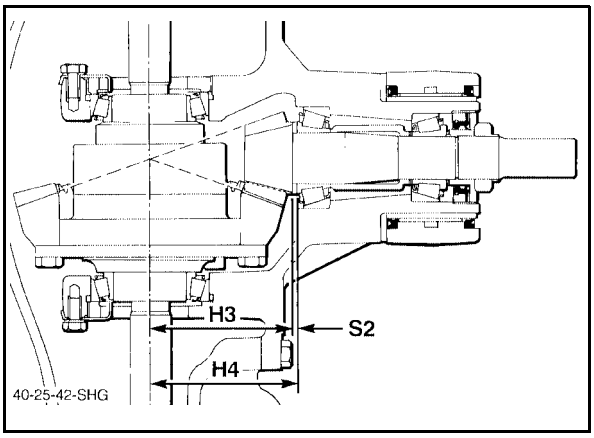

65

The dimension **H4** necessary in the calculation of the shim thickness can be determined using either New Holland pinion adjustment tool 293400 or VL Churchill tool FT3135.

Both procedures are explained as follows.

Pinion Shimming using New Holland Pinion Adjustment Tool 293400

1. Install pinion bearings in differential support housing and clamp in position using New Holland Tool No 293391 as used when determining thickness of shims for bearing preload.
   1. Pinion Measuring Gauge Tool No 293400
   2. Pinion Bearing Clamp. Use Tool No 293391
      or alternative clamp 50048 as shown
   3. Pinion Bearings
   4. Micrometer (Part of Tool No 293400)

2. Install New Holland Pinion Setting Tool No 293400 complete with bearing cup and adjusting rings. Tighten bearing caps to 113 Nm (83 lbf).

   If New Holland Tool No 293391 as described in pinion bearing shimming procedure is not available the Bearing Clamp Tool No 50048 may be used to clamp the bearings.

3. Adjust the cones of the tool so that the depth micrometer tip touches the inner race of the bearing and measure the dimension (H4).

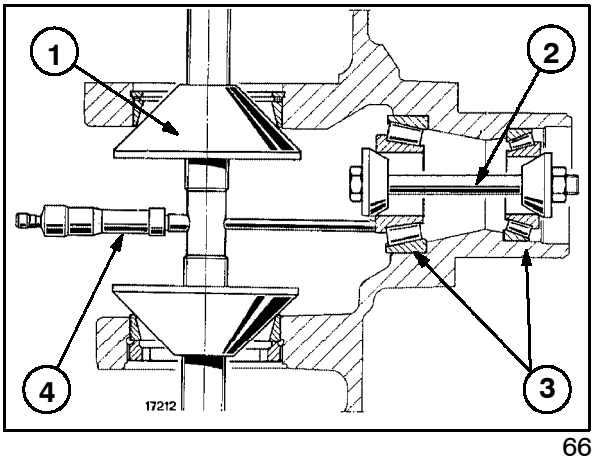

66

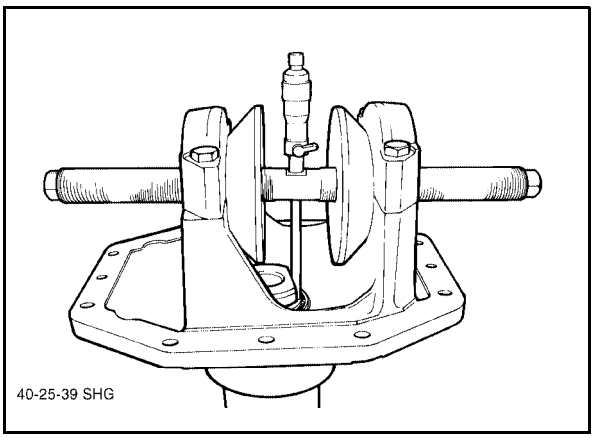

67

4. Determine the thickness of shims to be installed beneath the pinion gear as follows:

   Shim thickness **S2** = **H4**-**H3**

   Where:-

   H4 = Dimension measured using pinion micrometer tool

   H3 = 115 mm±**C**

   115 mm is the nominal manufacturing dimension from rear face of pinion gear to conical point of pinion. (Supplied by Manufacturer)

   C= Manufacturing correction factor stamped on face of pinion.

Example **H4** = 118.27
C = +0.1 mm
H3 = 115 + 0.1
= 115.1 mm
S2 = **H4** -**H3**
= 118.27 - 115.1

Shim Thickness **S2** = 3.17 mm

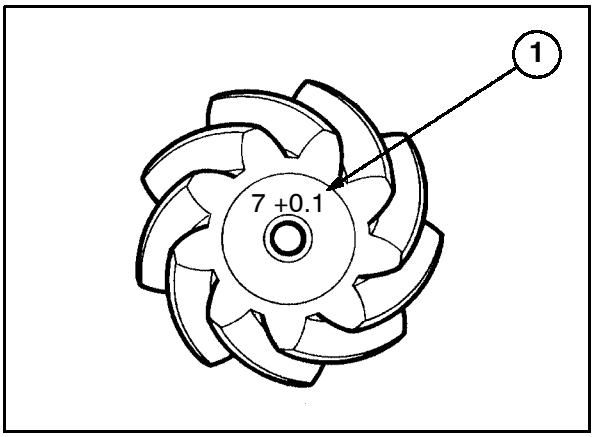

68

Pinion Shimming using VL Churchill Tools FT. 3135

1. Install bearing caps (less bearing cup) and tighten to a torque of 113 Nm (83 lbf).

2. Measure internal dimension of bearing bore and call this dimension 'A'.

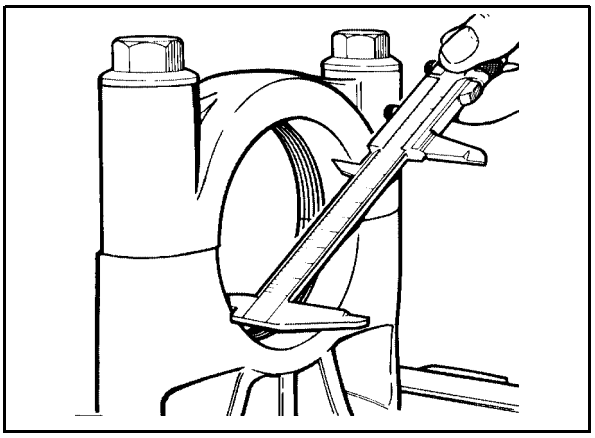
69

3. Install pinion bearings in the differential support housing and clamp in position with Tool No FT 3135.
   NOTE: *Tighten the clamp so that the bearing cones can just be turned by hand.*

4. Locate the bar gauge, part of Tool No FT3135, across bearing bore and measure dimension 'B'.

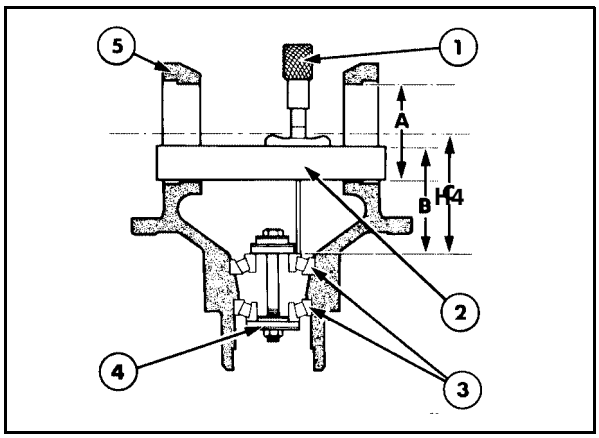

70

1. Depth Gauge
2. Bar Gauge - Part Of Tool No FT.3135
3. Pinion Shaft Bearings
4. Pinion Setting Gauge - Tool No FT.3135
5. Differential; Support Casing

5. Calculate Dimension '**H4**' using Formula

$$\mathbf{H4=B} - 25^{*} + \left(\frac{\mathbf{A}}{2}\right)$$

NOTE: ***FT 3135 Bar Gauge is 25 mm diameter.***

6. Determine the thickness of shims **S2** to be installed beneath the pinion gear as follows:

S2 = **H4** - **H3**

Where:-

H4 = Dimension Calculated in Step 5 above.

H3 = 115 mm±**C**

115 mm is the nominal manufacturing dimension from rear face of pinion gear to conical point of pinion. (Supplied by Manufacturer)

C= Manufacturing correction factor stamped on face of pinion.

Example **A** = 95 mm

B = 95.77 mm

$$\mathbf{H4=B} - 25^{*} + \left(\frac{\mathbf{A}}{2}\right)$$

$$\mathbf{H4} = 95.77 - 25^{*} + \left(\frac{95}{2}\right)$$

H4 = 118.27

C = 0.1 mm

H3 = 15 + 0.1

= 115.1

Shim Thickness **S2** = 118.27 - 115.1

= 3.17 mm

Pinion Shim and Bearing Installation

7. Install shim selected in pinion to crown wheel shimming procedure between pinion head and bearing. Ensure the chamfer on the shim faces towards the pinion head.

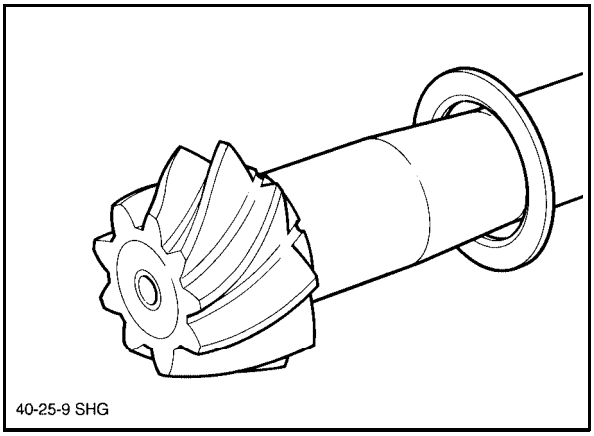

40-25-9 SHG

71

8. Install bearing onto pinion

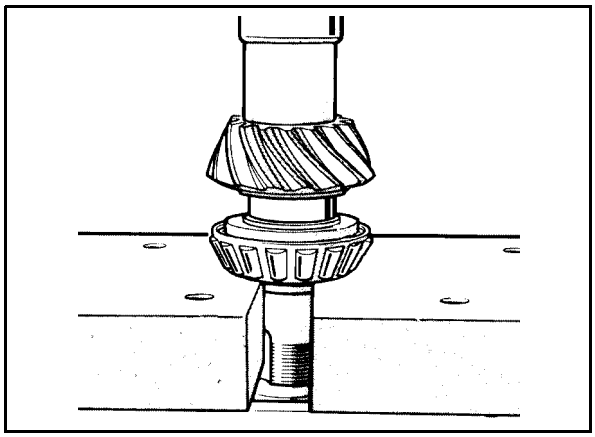

72

NOTE: *The use of a electronic induction heater will assist in the installation of the bearings without the need for a press.*

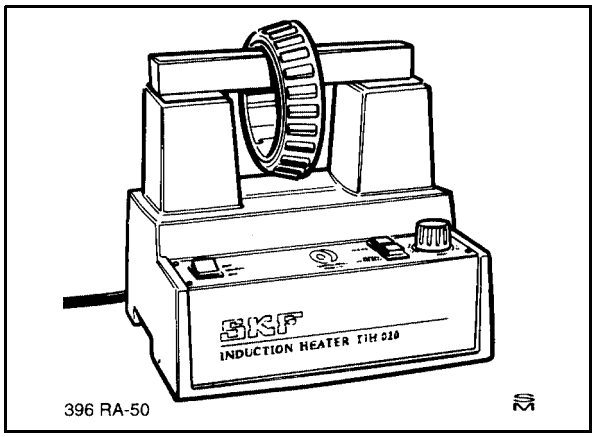

73

Pinion Bearing Preload Rolling Torque

The pinion bearing preload is measured as the torque or force required to rotate the pinion. The shim selected in the Pinion Bearing preload shim adjustment procedure on Page 28 ensures that the correct preload is achieved when the pinion nut is tightened to a torque of 294 Nm (217 lbf ft).

NOTE: *If the special tool required to determine the thickness of preload shim is not available install the same shim as removed during disassembly.*

1. Install the inner pinion bearing onto the pinion and locate the pinion into the differential carrier. Hold the pinion in position with a universal puller.

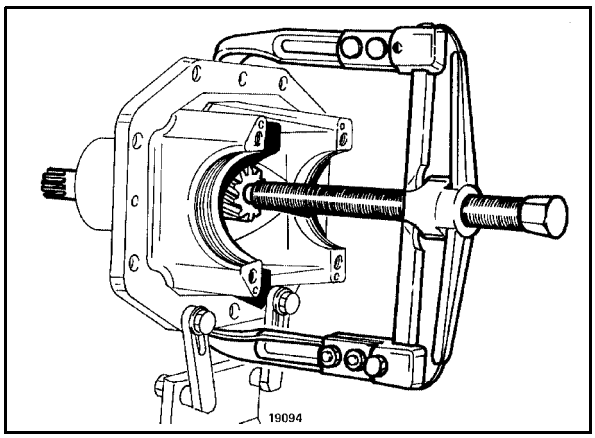

74

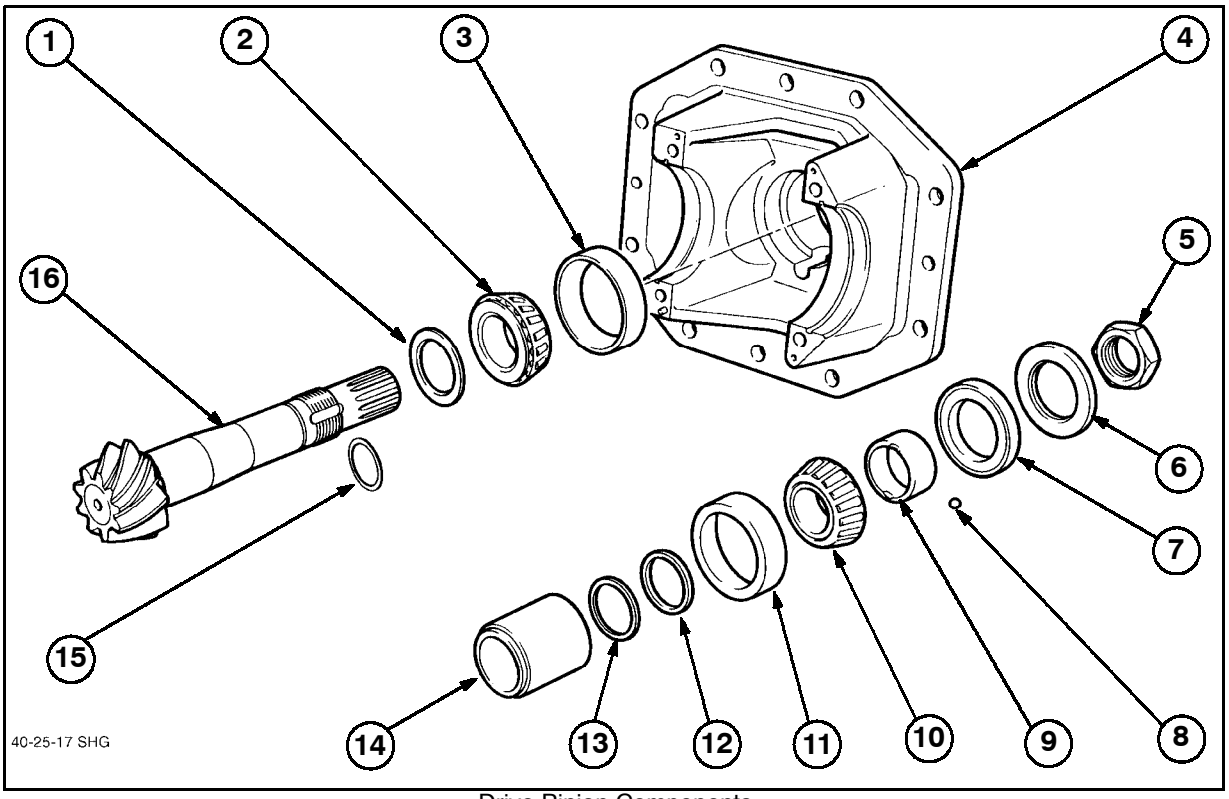

Drive Pinion Components

1. Shim
2. Bearing
3. Bearing Cup
4. Housing
5. Nut
6. Dust Cap
7. Seal
8. Ball
9. Sleeve
10. Bearing
11. Bearing Cup
12. Shim
13. Shim
14. Spacer
15. 'O' Ring
16. Pinion

2. Install the spacer and shims onto the pinion shaft. Lubricate and install the pinion outer bearing.

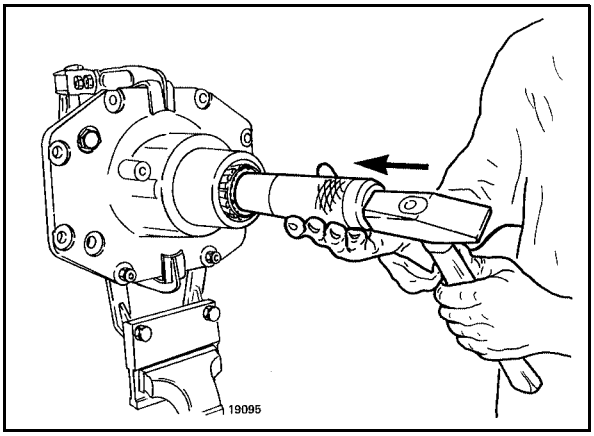

75

3. Install the sleeve. ball and pinion nut. Do not install the 'O' ring, oil seal and dust shield at this stage.

4. Tighten the pinion nut to a torque of 294 Nm (217 lbf ft).

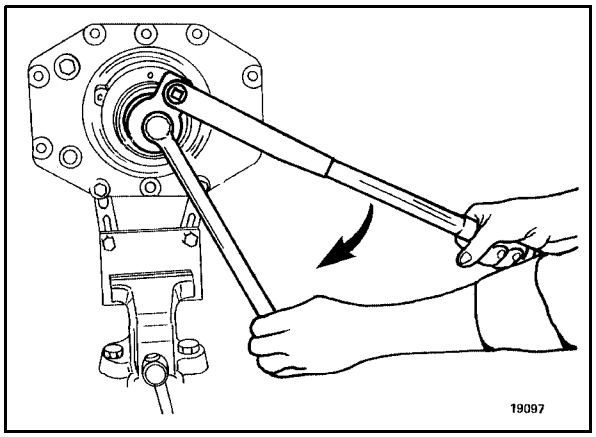

76

5. Screw an M12 bolt into end of the pinion shaft or use the locally fabricated pinion holding tool. Using a suitable low value torque meter measure the rolling torque of the pinion.

   The rolling torque should be 0.5-1.0 Nm (4.5-8.5 lbf in) excluding breakaway torque.

6. If the values recorded during the adjustment procedure are outside the specification adjust the thickness of shim and recheck bearing preload.

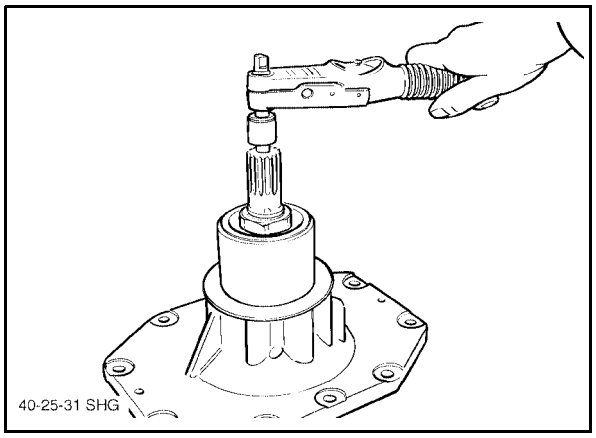

77

7. When the correct shim thickness has been established remove the pinion nut, sleeve and ball and install the 'O' ring and pinion oil seal.

8. Carefully reinstall the sleeve, ball and pinion nut.

NOTE: *Attempting to fit the oil seal with the sleeve installed may damage the oil seal lip.*

9. Tighten the pinion nut to a torque of 294 Nm (217 lbf ft) and deform the locking tab.

   Measure and record the pinion and seals rolling resistance A1.

CROWN WHEEL ADJUSTMENTS

Adjustment of the crown wheel bearings and the backlash between the pinion and crown wheel.

Hydraulic Dog Clutch

10. Install the differential assembly complete with crown wheel and inner crown wheel bearing rings in the differential housing.

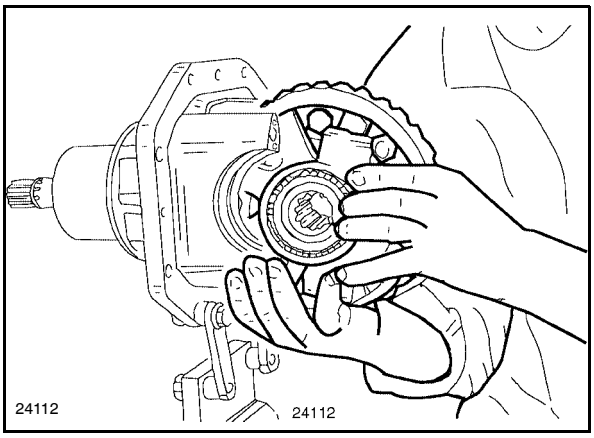

78

11. Insert the outer bearing rings (2) in the differential housing (1), fit the differential support caps (4), ensuring correct orientation of the threaded adjustment ring (3). Tighten the bolts to a torque of 59 Nm, then slacken them off and re-tighten to a torque of 20 Nm.

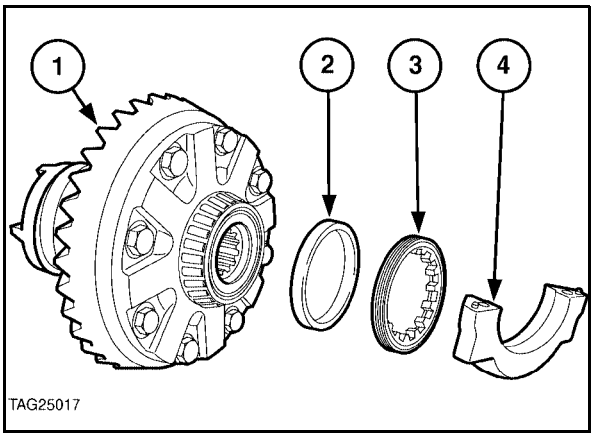

79

12. Measure the thickness **SP** the adjustment shim which was previously removed during the axle overhaul procedure. Refit the shim and circlip.

13. With the bearings lubricated, rotate the crown wheel and at the same time tighten the threaded adjustment ring using wrench **293665** to a torque of 39 - 59 Nm to take up the axial play between the components.

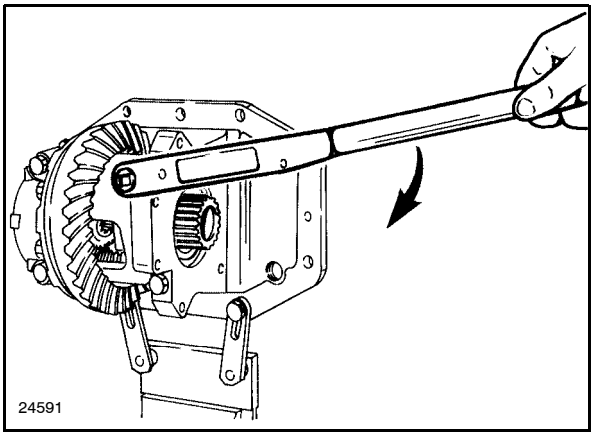

80

14. Measure the backlash between pinion and crown wheel, using a dial gauge perpendicular to the outer edge of a tooth on the crown wheel.

15. Repeat the measurement in a further two positions 120° apart and compare the average of the three values **(Gm)** with the specification backlash: 0.15-0.20 mm, with an **average of 0.18 mm**.

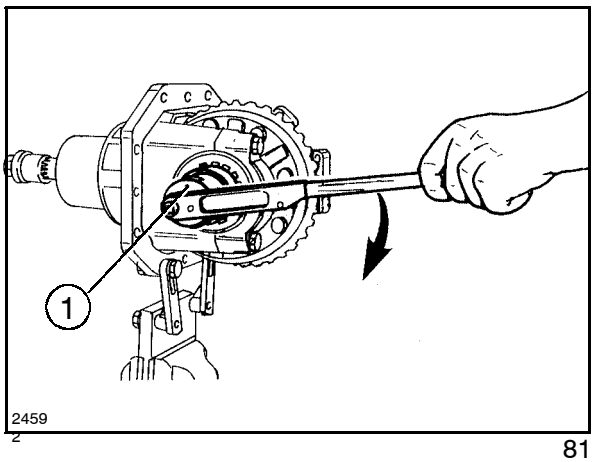

81

If the **measured backlash exceeds** the prescribed value, **fit a thinner adjustment shim.**

The thickness of the adjustment shim to be fitted in the differential housing is given by:

Shim S = Sp - {(Gm - 0.18) x 1.35}

where:

Sp = thickness of test shim installed in the differential housing. i.e. original shim used as a test shim.

Gm = average backlash measured between the pinion and crown wheel

If the **backlash measured is less than** the prescribed value, **fit a thicker adjustment shim**, the value being given by:

Shim S = Sp + {(0.18 - Gm) x 1.35}

Recheck the backlash and adjust shim if necessary.

Crown Wheel to Pinion Backlash

Self Locking Differential Lock

1. Locate the differential assembly into the support casing and tighten bearing cap bolts to a torque of 59 Nm (44 lbf ft).

NOTE: *Ensure the stepped edge of the adjuster ring (2) faces and touches the edge of the bearing.*

2. Loosen bearing cap bolts and re-torque to 20 Nm (15 lbf ft)

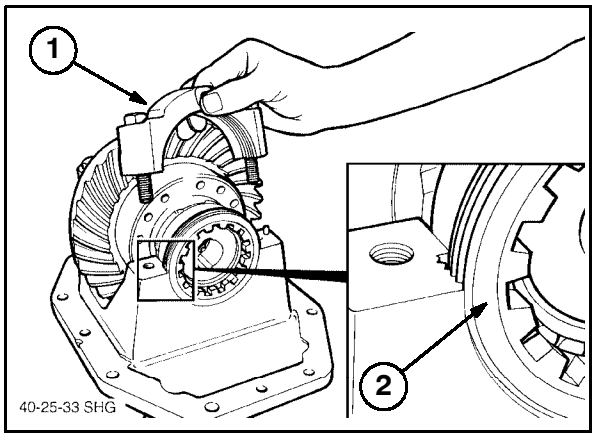

82

3. Adjust the ring gears to remove all free play between the crown wheel and pinion.

4. Position a dial indicator with the stylus at 90° to the crown wheel teeth and adjust each ring nut by equal amounts until crown wheel to pinion backlash is 0.18-0.23 mm (0.007-0.009 in)

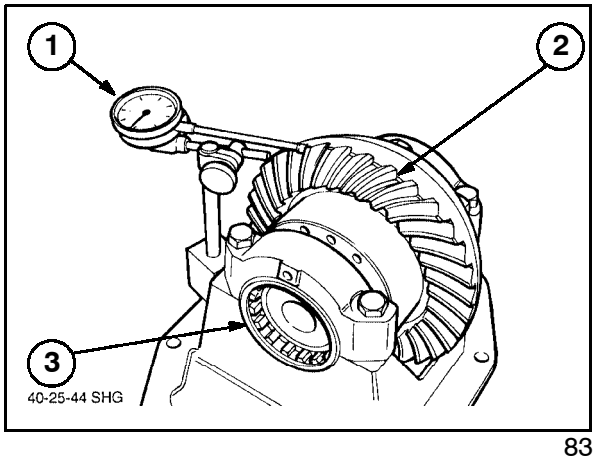

83

5. Tighten right hand ring nut (nut opposite crown wheel) to obtain a torque of 39-59 Nm (29-44 lbf ft) and recheck the crown wheel to pinion backlash.

6. Re-tighten the bearing cap bolts to a torque of 113 Nm (83 lbf. ft)

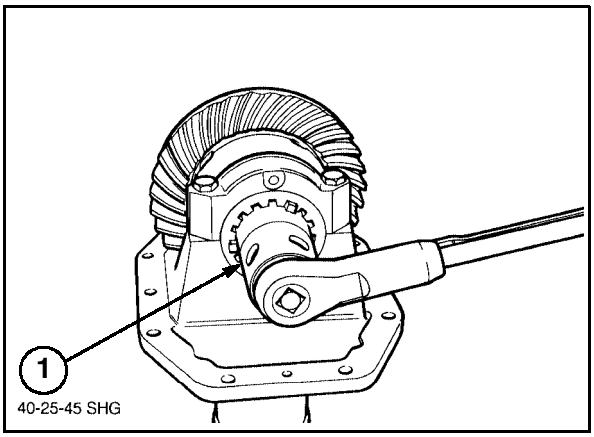

84

Differential Bearing Preload

Self locking and hydraulically engaged differential lock

The differential bearing preload is checked by measuring the combined rolling torque of the crown wheel and pinion assembly and comparing it to the pinion and seals rolling torque value.

1. Attach a torque meter to the pinion shaft and measure the rolling torque to rotate the pinion and crown wheel A2.

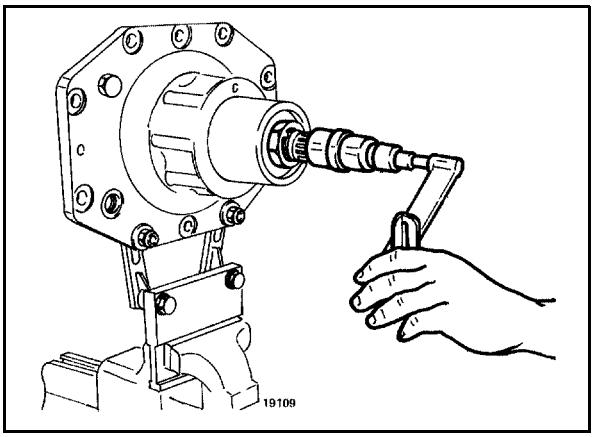

85

2. Subtract from the rolling torque reading A2 described above, the pinion only rolling torque A1.

   The difference between the two values should be 1 to 1.5 Nm, (9 - 13 lbf in).

3. If the rolling torque of the pinion and differential assembly is not to specification adjust the ring 'opposite' the crown wheel to increase or reduce differential bearing preload. Recheck the rolling torque as detailed above.

   Refit the lock tabs to secure the adjusting ring(s).

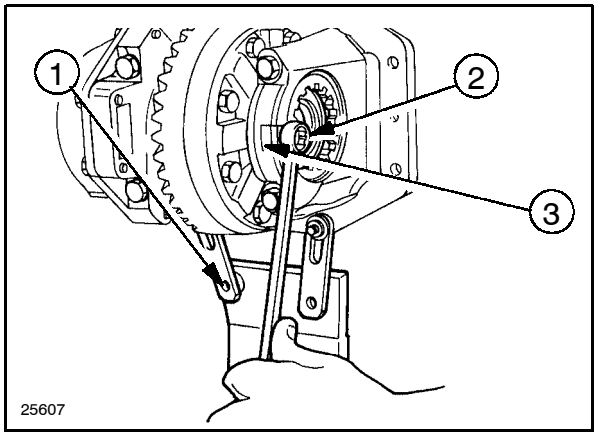

86

EXAMPLE

Rolling torque of Pinion and Differential

A2 = 2.1 Nm (19 lbf in)

Rolling torque of Pinion

A1 = 0.7 Nm (6 lbf in)

Calculated Rolling Torque of Differential

= 2.1 - 0.7 Nm (19 - 6 lbf in)

=1.4 Nm (13 lbf in)

4. Refit the differential to the axle casing after having carefully cleaned and degreased the mating surfaces and applied a bead of gasket sealer approx. 2mm wide along the line shown in the figure below.

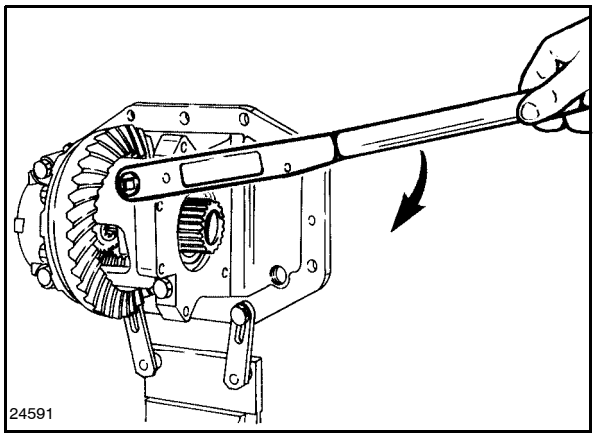

87

Gasket sealer application diagram for assembly of bevel drive unit and epicyclic final drive unit.

The types of gasket sealer to use are listed on page 1, sect. 00.

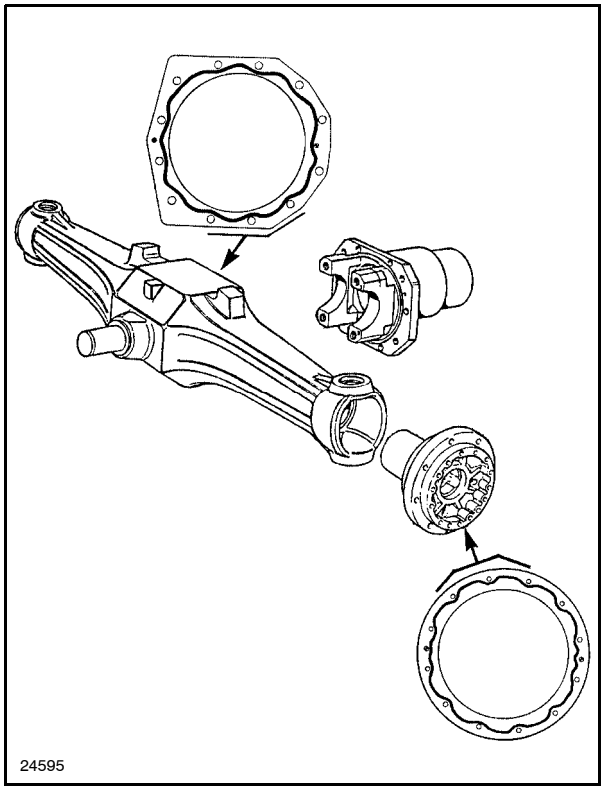

88

CHECKING THE ALIGNMENT OF STEERING-DRIVE WHEELS

When travelling forward in a straight path, the wheels of four-wheel drive tractors must be parallel to the longitudinal axis of the tractor, alternatively a slight toe-in of the front wheels is permissible up to a maximum of 6 mm as measured at the edges of the wheel rims.

To check the exact value of the toe-in setting of four-wheel drive tractors, proceed as follows.

1. Inflate the front tyres to the prescribed pressure.

2. Position the steering at half-lock with a straight-edge along the longitudinal axis of the tractor.

3. Check that the wheels are parallel to the longitudinal axis of the tractor.

4. Measure the distance (1) between the **front inside edges** of the wheel rims, at the height of the wheel hub centres.

5. Turn both front wheels through 180° then measure, again at the height of the wheel hub centres, the distance (2) between the **rear inside edges** of the wheel rims, checking that this new measurement is equal to or greater than (toe in) the distance (1) by a maximum or 6 mm. The rotation of the wheels through 180° is necessary to eliminate the effect on the measurement of any wear of the rims.

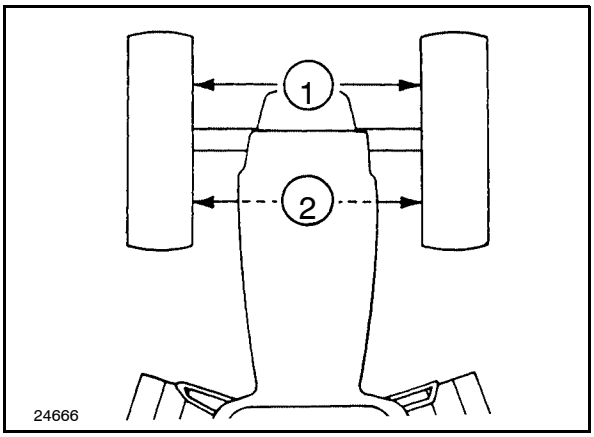

89

6. If it is necessary to correct the wheel alignment, remove nut (2) and pull the track rod end (1) out of its housing. Slacken off locknut (3) and screw the track rod end (1) in or out to increase or decrease the distance (2, fig. 81).
   Reposition the track rod end (1) in its housing and re-check alignment as described in points 4 and 5.
   After having adjusted the alignment to within the prescribed limits, tighten locknut (3) to a torque of 180 Nm (183 kgm) and nut (2) to 100 Nm (10.2 kgm).

Note - Self-locking nut (2) must be renewed each time it is removed or partially unscrewed.

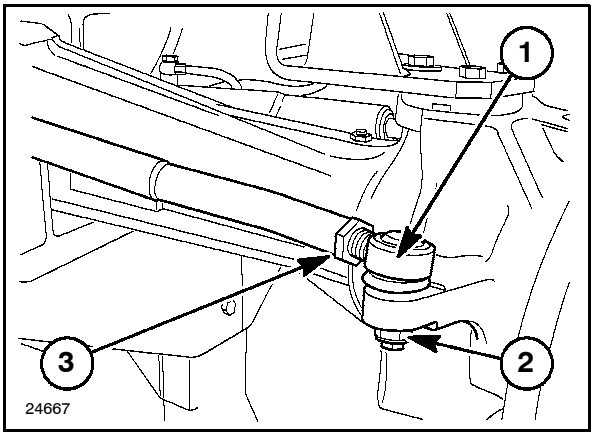

90

TWO WHEEL DRIVE AXLE

SPECIFICATIONS

TORQUES

Nm

lbf ft

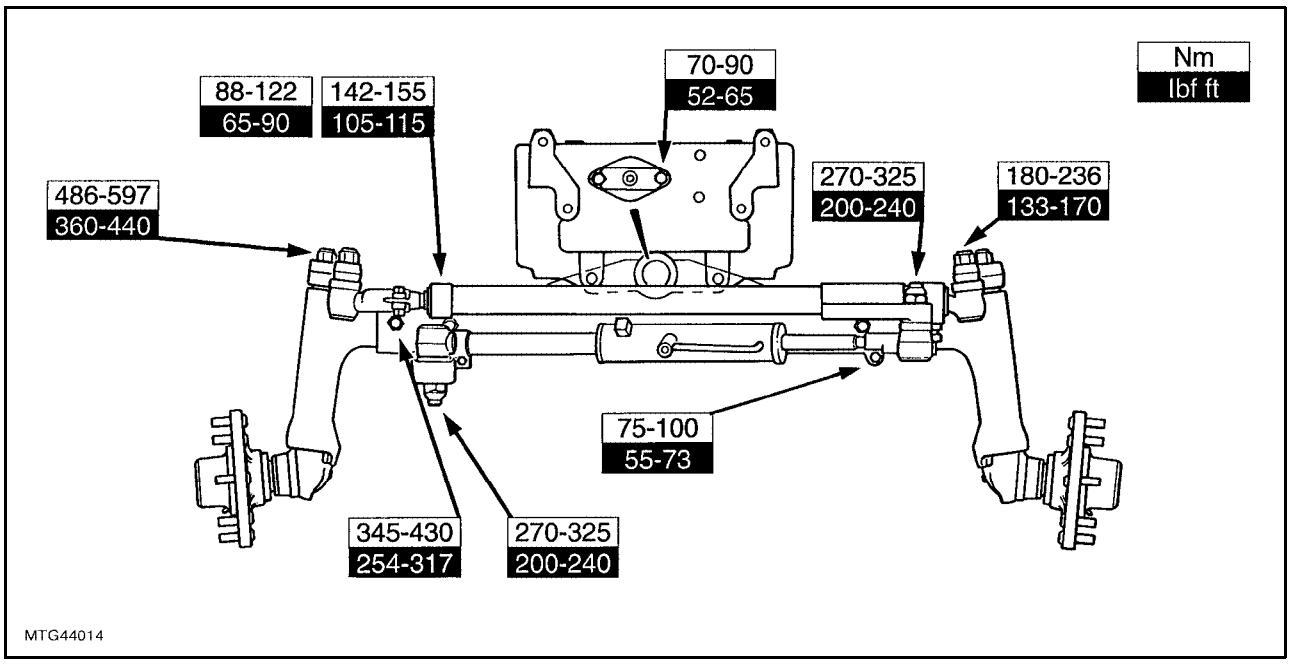

LUBRICANT

Hub bearing grease to Specification NH710A (Ambra GR9).

DESCRIPTION AND OPERATION

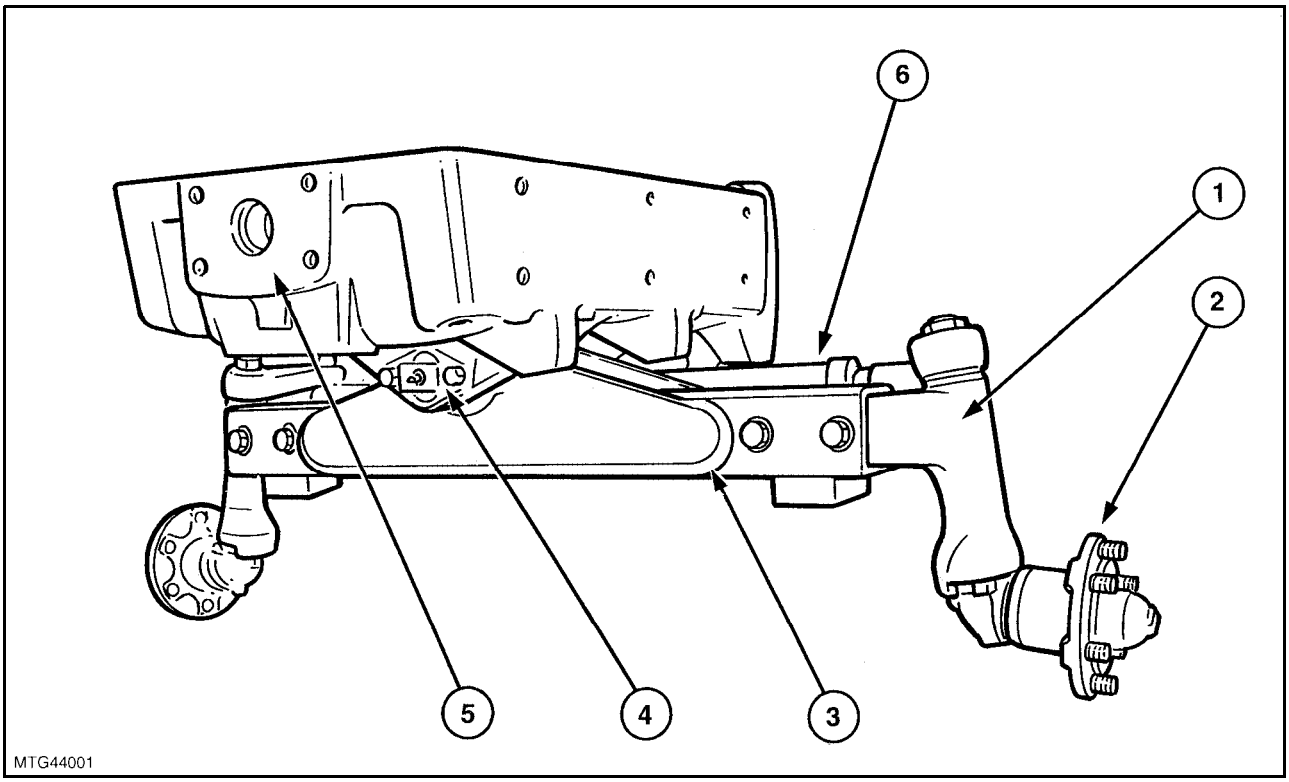

Two Wheel Drive Axle Assembly 181

1. Telescopic Axle Extension
2. Wheel Hub and Spindle
3. Centre Beam
4. Support Pin
5. Front Support
6. Track Control Rod Assembly

The two wheel drive front axle consists of a hollow centre beam with telescopic axle extensions and spindle assemblies at each end, Figure 181.

The centre beam is attached to the support using a single pin, allowing radial movement of the axle about the centre line of the tractor.

The axle is equipped with hydrostatic steering as standard using a cylinder connected between the axle beam and track control rod assembly.

The centre beam, telescopic extensions and track control rod are machined to provide a series of holes allowing the track of the axle to be varied in 4 in (102 mm) steps between 56 in (1422 mm) and 84 in (2134 mm) depending on the tractor model.

ADJUSTMENTS

TRACK WIDTH ADJUSTMENT

1. Apply the handbrake and place blocks at the front and rear wheels.

2. Jack up the front axle (2) and place on axle stands.

3. Remove axle extension (3) securing bolts (1), Figure 182.

4. Remove locating bolts from both ends of track rod, Figure 184.

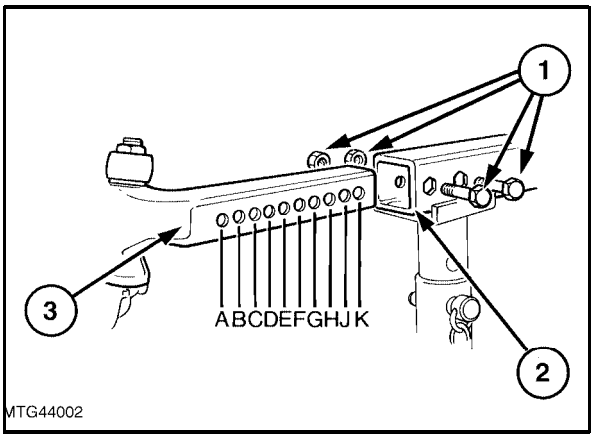

182

5. Set the left and right hand axle extensions to the required track as indicated in the following tables.

Standard Axle

Track Setting		Securing Bolt Locations Refer to 182	
in.	mm		
56	1422	A	C
60	1524	B	D
64	1626	C	E
68	1727	D	F
72	1829	E	G
76	1930	F	H
80	2032	G	J
84	2134	H	K

NOTE: *The track settings shown are approximate. The front wheel discs are off-set relative to the centre line of the rim. The track settings in the table are with the dished side of the wheel nearest the axle hub. If the front wheels are reversed on the hubs the track settings shown in the tables will be increased by approximately 4 in. (100 mm).*

Tobacco Axle (North America Only)

Track Setting		Securing Bolt Locations Refer to 182	
in.	mm		
68	1727	A	C
72	1829	B	D
76	1930	C	E
80	2032	D	F
84	2134	E	G
88	2235	F	H
92	2337	G	J
96	2438	H	K

6. Install the axle extension securing bolts and tighten to a torque of 300 lbf ft (407 Nm).

7. Position both wheels straight ahead and install the track control rod locating bolts, Figure 184. Tighten the bolts to a torque of 110 lbf ft (150 Nm) and their locknuts to 55 lbf ft (75 Nm). Re-check all torque settings after 50 hours of operation.

Track Control Rod - Left Hand End

1. Drillngs
2. Locating Bolt and Locknut
3. Clamp Bolt
4. Threaded Section

FRONT WHEEL TRACK ADJUSTMENT

After resetting the track width, the front wheel '**Toe-Out**' may require adjustment. For correct operation, the front wheel toe-out should be 0-0.5 in. (0-13 mm).

1. Position the front wheels in the straight ahead position and measure the distance between the wheel rims at hub height at the **front** of the wheels. Position B, Figure 183.

2. Rotate both wheels 180°, to eliminate wheel rim run out errors and check the measurements at the rear of the wheels in position A, Figure 183.

3. Calculate the toe-out measurement by subtracting dimension A from dimension B.

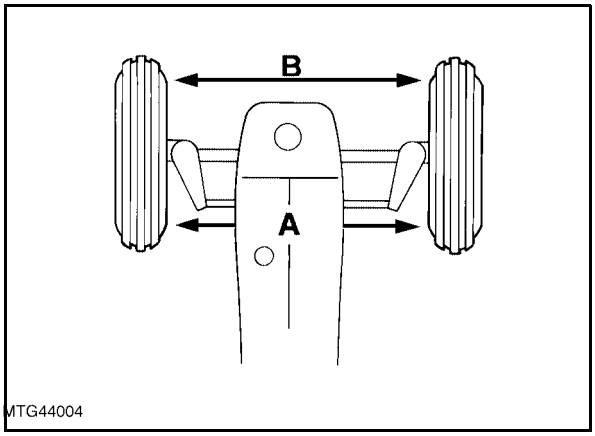

183

NOTE: *If the toe out is correctly adjusted, Dimension A should be up to 0.5 in (13 mm) greater than dimension B.*

Where necessary adjust tracking as follows:

4. Remove locating bolt from left hand end of track rod (2), Figure 184.

5. Slacken clamp bolt (3) and turn threaded section (4) of track rod in or out until toe-out is correct when the locating bolt is re-inserted.

6. Tighten the locating bolts to a torque of 110 lbf ft (150 Nm) and their locknuts to 55 lbf ft (75 Nm).

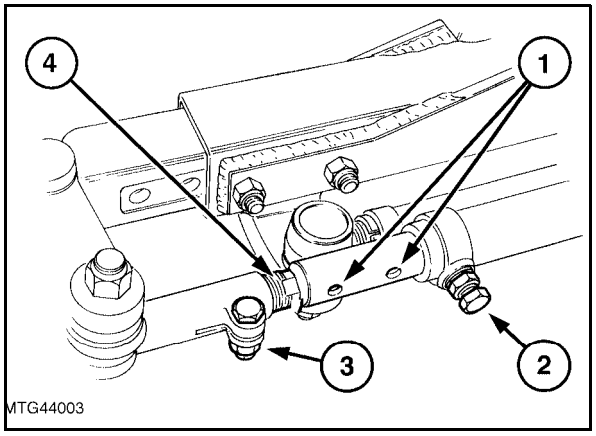

184

FRONT AXLE-OVERHAUL

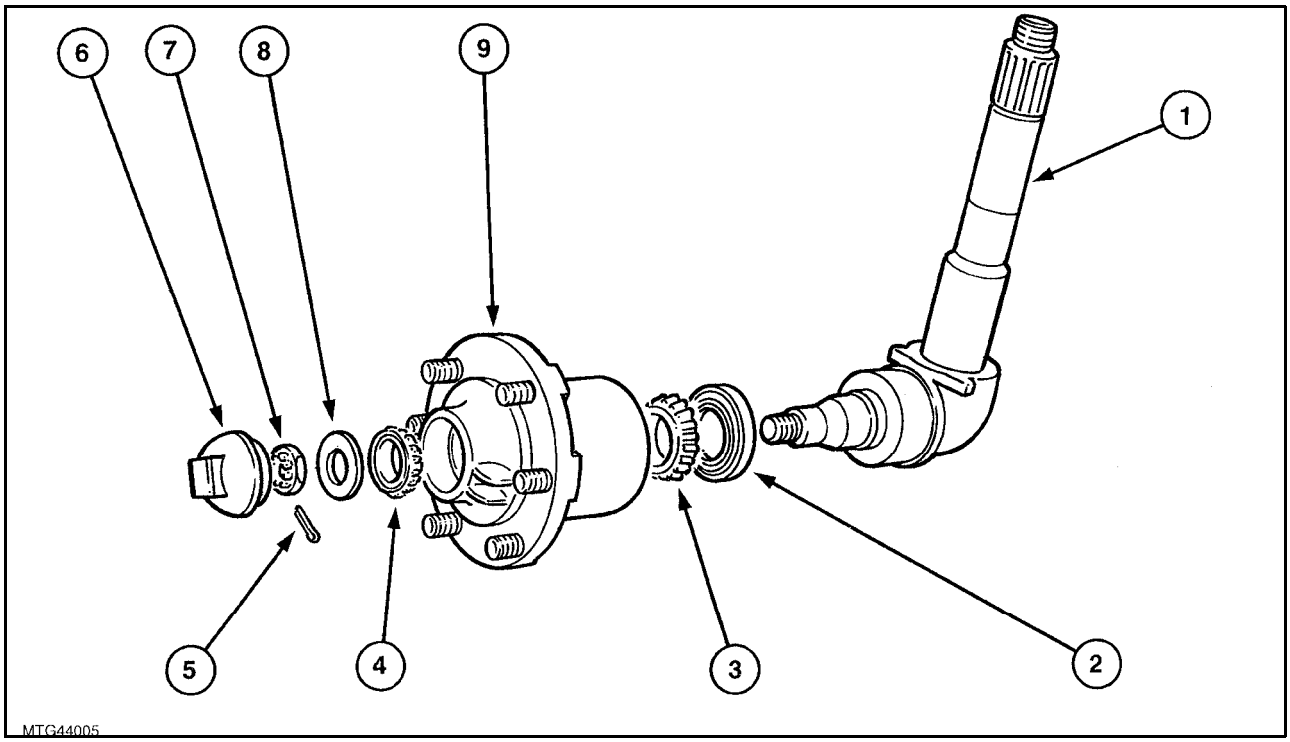

Hub and Spindle Assembly 185

1. Spindle
2. Grease Retainer
3. Inner Bearing
4. Outer Bearing
5. Split Pin
6. Grease Retaining Cap
7. Castellated Nut
8. Washer
9. Hub

The wheel hubs spindles and extensions can be serviced without removing the axle from the tractor. It is only necessary to remove the axle in order to replace the bushes in the centre beam.

For overhaul of the steering cylinder refer to Section 5 Braking and Steering Systems.

HUB AND BEARING OVERHAUL

REMOVAL

1. Use a suitable jack or hoist to support the tractor and remove wheel.
2. Remove hub grease retaining cap and castellated nut, Figure 185.
3. Pull hub assembly from spindle and separate components.

INSPECTION AND REPAIR

1. Clean all components using a suitable cleaning agent such as paraffin (Kerosene).
2. Inspect hub inner and outer bearings and cups. If damaged they should be replaced as an assembly, ensuring that the new cups seat correctly against the shoulders in the wheel hub.

RE-ASSEMBLY

1. Position grease retainer and inner bearing on spindle.
2. Pack the hub and bearing with grease to Specification NH710A
3. Install hub, outer bearing, washer and castellated nut.
4. Tighten castellated nut to a torque of 20-30 lbf ft (27-40 Nm)
5. Rotate hub clockwise 3-6 revolutions.
6. Further tighten the retaining nut to a torque of 45-55 lbf ft (61-74 Nm) and install a new split pin.
7. Pack the outer bearing with grease and install the cap.

SPINDLE OVERHAUL

REMOVAL

1. Use a suitable jack or hoist support the tractor and remove wheel.

2. Using a thread file (2) clean the threads (1) at the top of the spindle, Figure 186.

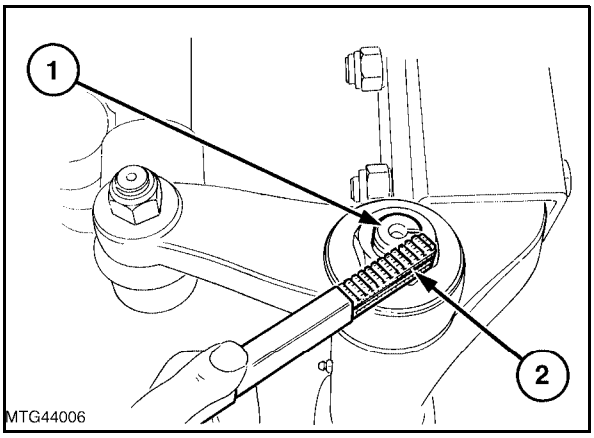

186

NOTE: *The threads are deformed during assembly to act as a locking device on the spindle arm retaining nut.*

3. Disconnect track control rod assembly from spindle arm (1), Figure 187.

4. Using a suitable puller remove spindle arm and felt washer (2), Figure 187.

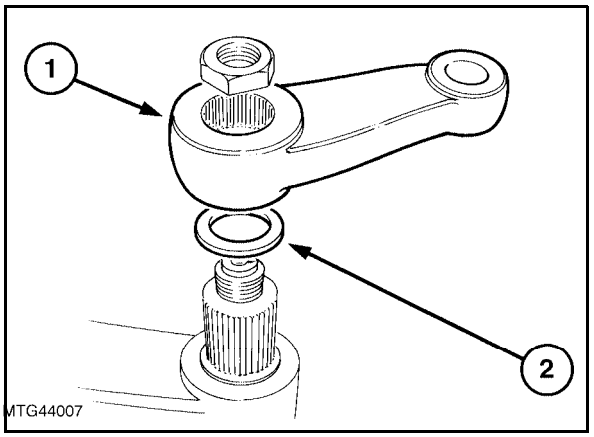

187

5. Remove spindle, thrust bearing (1) and spacer (2), Figure 188.

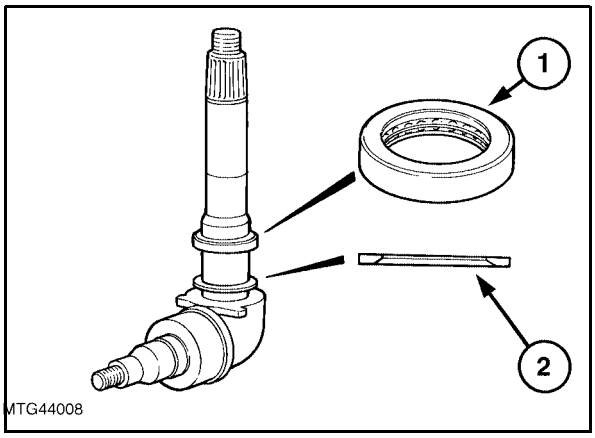

188

INSPECTION AND REPAIR

1. Clean all components using a suitable cleaning agent such as paraffin (Kerosene).

2. Inspect the spindle bearing surfaces, thrust bearing and washer for wear or damage.

3. Inspect the spindle bushes in the top and bottom of the axle telescopic extensions. If worn remove extension from tractor and replace bushes.

4. Inspect track control rod ball joints.

RE-ASSEMBLY

1. Position spacer on wheel spindle. Ensure chamfered edge of spacer faces down, Figure 189.
2. Position bearing on spindle with manufacturers name facing upwards.
3. Pack spindle thrust bearing with grease to specification NH710A (Ambra GR9) and install on spindle.
4. Install spindle into axle extension. Ensure spindle rotates freely in the bushes.
5. Install a new felt dust seal
6. Position arm onto the spindle ensuring the marks on both the arm and spindle are aligned (1), Figure 190.
7. Tighten the spindle nut to a torque of 360-440 lbf ft (488-597 Nm). To prevent the nut from loosening during normal operation deform the protruding thread adjacent to the nut.
8. Reconnect track control rod and tighten ball joint (1), Figure 191, to the correct torque of:- 133-170 lbf.ft (180-236 Nm)
9. After re-assembly check front wheel track adjustment. Refer to Page 7-44.

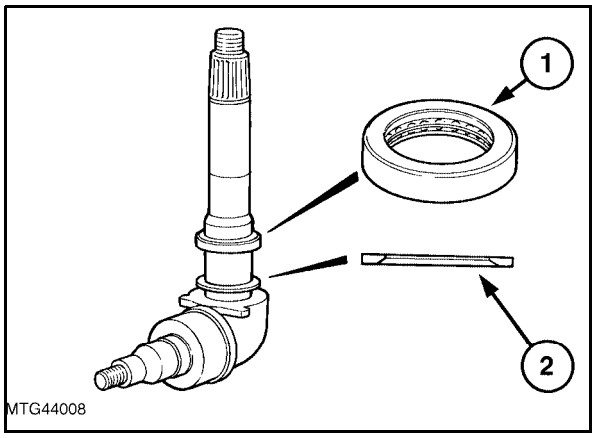

189

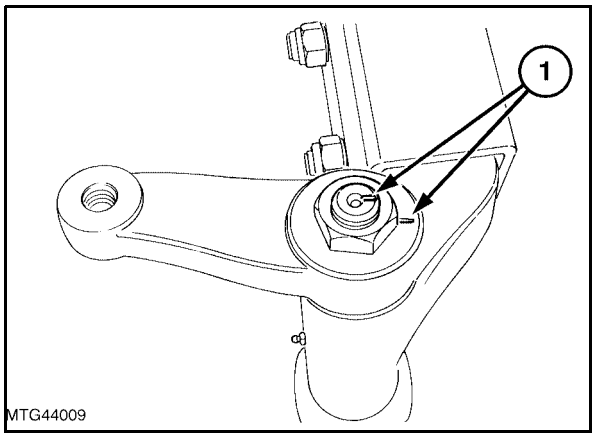

190

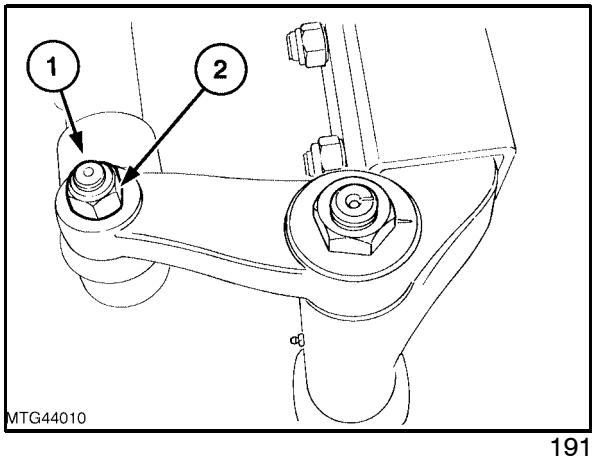

191

AXLE CENTRE BEAM AND FRONT SUPPORT OVERHAUL

REMOVAL

1. Position the front wheels straight ahead.
2. Disconnect and remove steering cylinder.
3. Raise the front of the tractor and position safety stands under the engine and remove front wheels.
4. Support axle centre beam assembly to remove weight from support pin.

5. Remove locking plate (3), Figure 192.

6. Drive the pin (1) from the support and carefully lower axle (2) from front support (4).

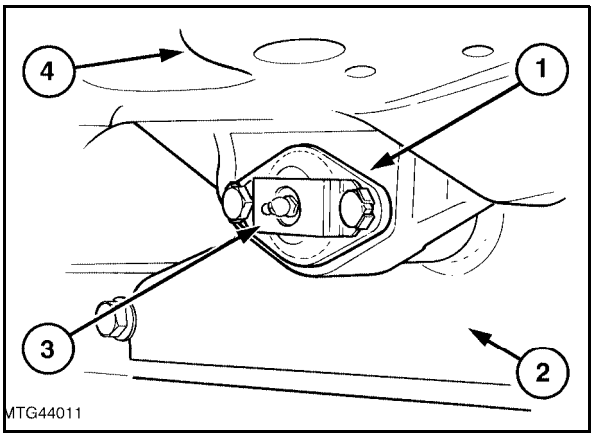

192

INSPECTION AND REPAIR

1. Inspect bushes and pin, replacing if worn or damaged.

2. Replace thrust washers.

3. Replace support pin locking plate.

4. Inspect front support for signs of cracks.

RE-ASSEMBLY

1. Install axle (3) onto front support (2) ensuring thrust washers (1 & 5) are positioned at both ends of axle pivot pin bore, Figure 193.

2. Tighten support pin (4) retaining bolts to a torque of 52-66 lbf ft (70-90 Nm) and bend locking plate tabs against bolt heads.

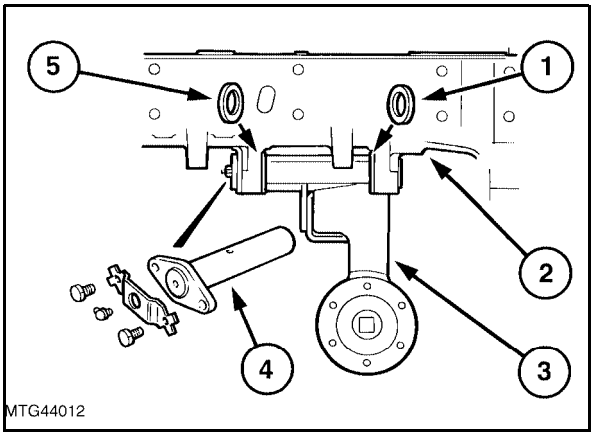

193

NOTE: *On tractors fitted with the long wheel base option (2), ensure the axle pivot pin trunnion (4) to front support (1) retaining bolts are tightened to a torque of 254-317 lbf ft (345-430 Nm) and locked in position with a locking plate (3). Figure 194.*

3. Reconnect steering cylinder and bleed steering system of air as described in Section 41, Steering Systems.

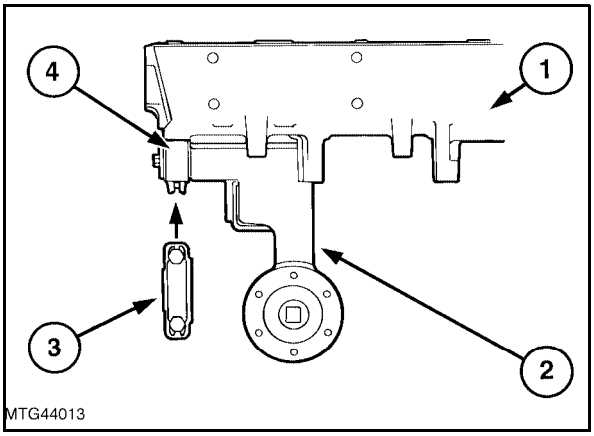

194

INDEX

Axle centre beam and front support overhaul 7-47
Bevel drive adjustments 7-29
Complete front axle removal – installation . . 7-12
Crown wheel adjustments 7-36
Description and operation 7-7
Front axle differential 7-24
Front axle mechanical transmission 7-2
Front axle overhaul 7-45
Front wheel track adjustment 7-44
Hub and bearing overhaul 7-45
Spindle overhaul 7-46
Steering-drive wheels, checking the alignment 7-39
Steering swivel pins and bearings 7-26
Stub axle adjustment 7-27
Tools 7-6
Torque specifications 7-5
Track width adjustment 7-43
Troubleshooting, front axle hydraulic differential lock 7-11
Two wheel drive axle 7-41
Two wheel drive axle description and operation 7-42

SECTION 8
POWER TAKE OFF
CONTENTS

INDEPENDENT POWER TAKE OFF SYSTEMS 8-2
INDEX 8-37

INDEPENDENT POWER TAKE OFF SYSTEMS

SPECIFICATIONS

Refer to appropriate hydraulic pump pressure testing procedure for testing of hydraulic pressures within the PTO circuit.

Mechanically Operated PTO

Pressure Regulating Valve @ 2100 erpm	170-200 lbf/in^2	11.7-13.8 bar
@ 800 erpm	130 lbf/in^2	9 bar minimum
Lubrication Circuit Relief Valve @ 800 erpm	42-50 lbf/in^2	2.9-3.5 bar

Solenoid Operated PTO with Fixed Displacement Hydraulic Pump

Pressure Regulating Valve @ 2100 erpm	260-290 lbf/in^2	18-20 bar
@ 800 erpm	190 lbf/in^2	13 bar minimum
Lubrication Circuit Relief Valve	73-123 lbf/in^2	5.3 - 8.5 bar

Solenoid Operated PTO with CCLS Variable Displacement Hydraulic Pump

NOTE: The pressure regulating valve for tractors installed with a variable displacement CCLS hydraulic pump is incorporated within the hydraulic pump regulating valve. The lubrication circuit relief valve is housed within the 16 $\times$ 16 transmission control valve.

Pressure Regulating Valve @ 2100 erpm	260 - 290 lbf/in^2	18-20 bar
Lubrication Circuit Relief Valve	80 - 100 lbf/in^2	5.5 - 6.9 bar

Drive Gear End Float (2 Speed PTO Systems)

End Float	0.005 in	0.13 mm
Shim Sizes	0.001 in	0.025 mm
	0.003 in	0.076 mm
	0.005 in	0.127 mm
	0.012 in	0.305 mm
	0.020 in	0.508 mm

Rear Shaft End Float

End Float	0.018 - 0.40 in	0.46 - 1.0 mm
Shim Size	0.010 in	0.25 mm

TORQUES

Components	lbf.ft	Nm
Rear Shaft Bearing Retainer Bolts	48-63	65-85
Rear Shaft Bearing Retainer Bolts	48-63	65-85
PTO Output Shaft Bearing Retainer	140-170	190-230
Solenoid Valve	12-16	16-22
PTO Valve Location Adjuster		
Front Pin	20-26	27-35
Rear Pin (back off 1/4 turn)	9	1
Rear Pin Locknut	15-20	21-27
Brake Band Adjuster (back off 2 1/2 turns)	9-11	1-1.2
Clutch Support Bolts	14-17	19-23
Sump Cover Bolts	27-37	37-50
Shift Fork Bolt	20-25	27-34

SEALER

New Holland, Thread Lock and Seal, Part Number 82995773

PTO – FAULT FINDING AND SPECIFICATIONS

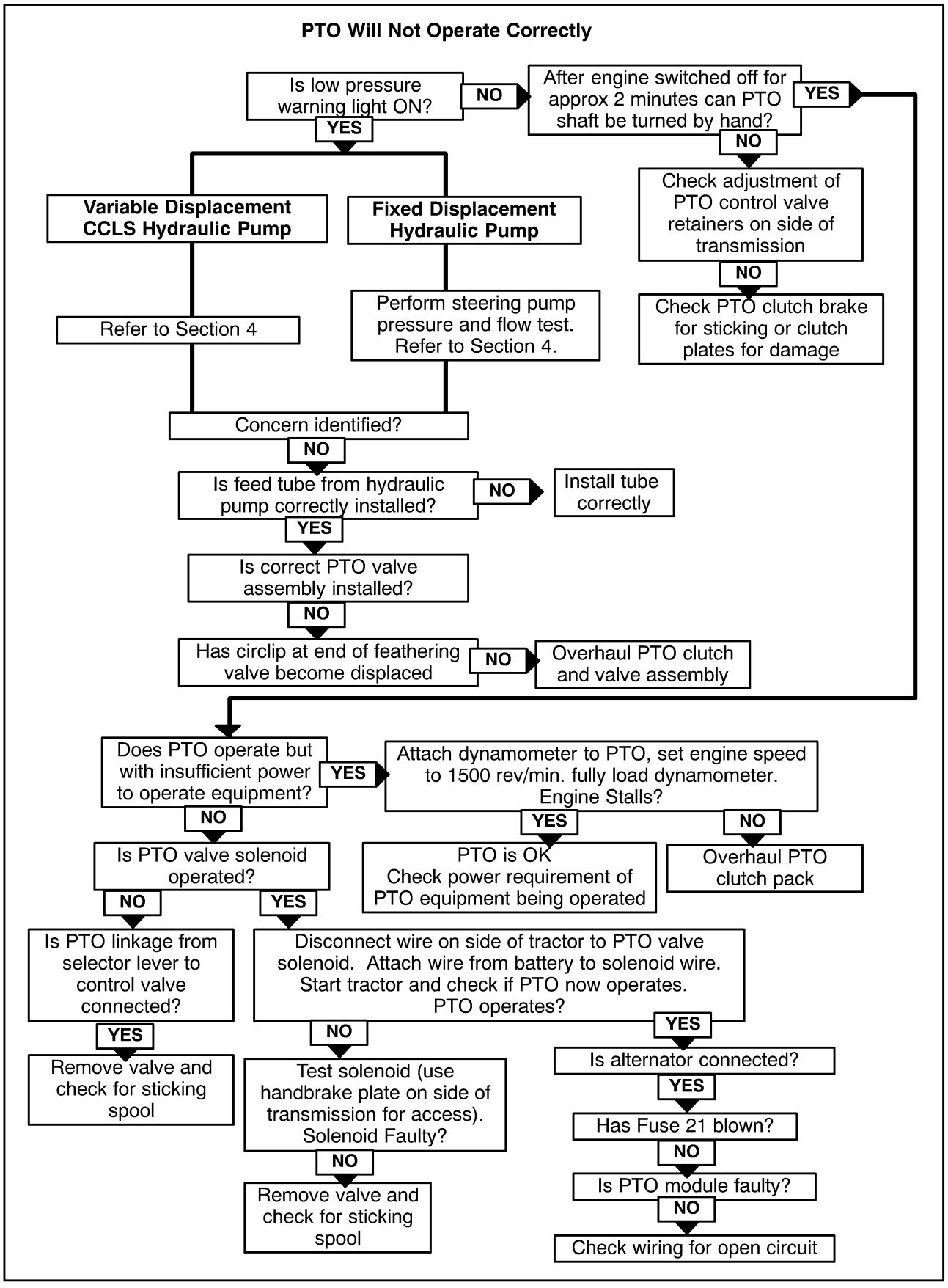

PTO Shaft Turns Continuously

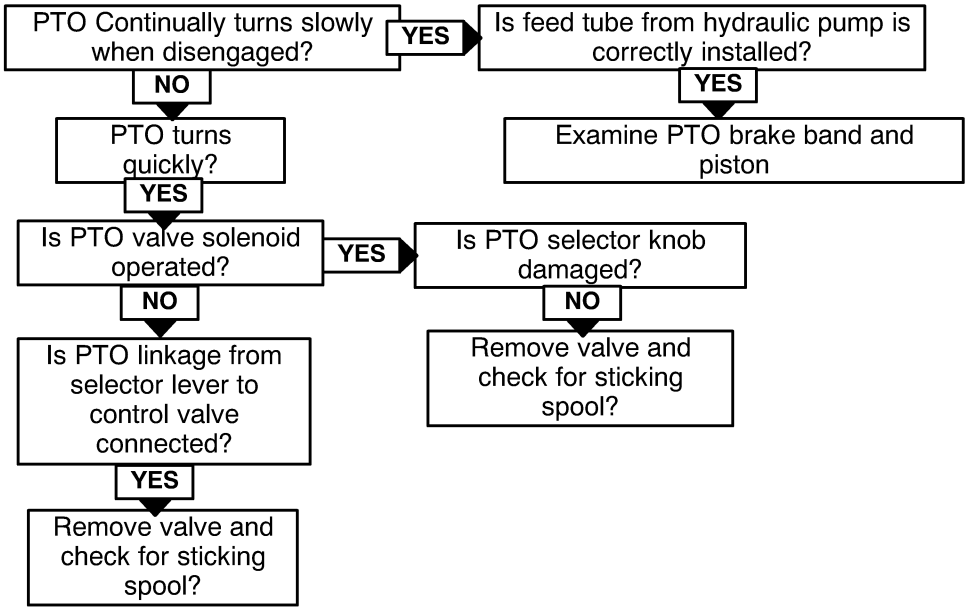

POWER TAKE-OFF (PTO) SYSTEMS-DESCRIPTION AND OPERATION

The power take off (PTO) enables engine power to be transferred directly to mounted or trailed equipment via a splined shaft at the rear of the tractor, Figure 1.

PTO driven equipment is designed to operate using either a 6 or 21 splined output shaft at a specified output shaft speed.

The output shaft speed must be restricted to 540 rev/min for equipment designed for use with the 6 splined shaft and 1000 rev/min for equipment designed for use with the alternative 21 splined shaft.

The types of PTO system available on TS Series tractors fall into the following three categories:-

Single speed PTO, using the standard 6 splined output shaft for operation at 540 rev/min.

Two-speed non shiftable PTO with interchangeable 6 and 21 splined output shafts.

Two-speed shiftable PTO enabling the 6 splined output shaft to be operated at 540 rev/min at two separate engine speeds and an alternative 21 splined output shaft for operation at 1000 rev/min.

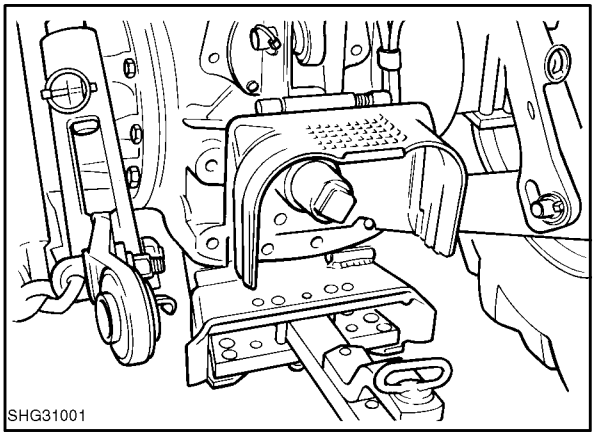

PTO Shaft 1

1. PTO Guard
2. PTO Shaft

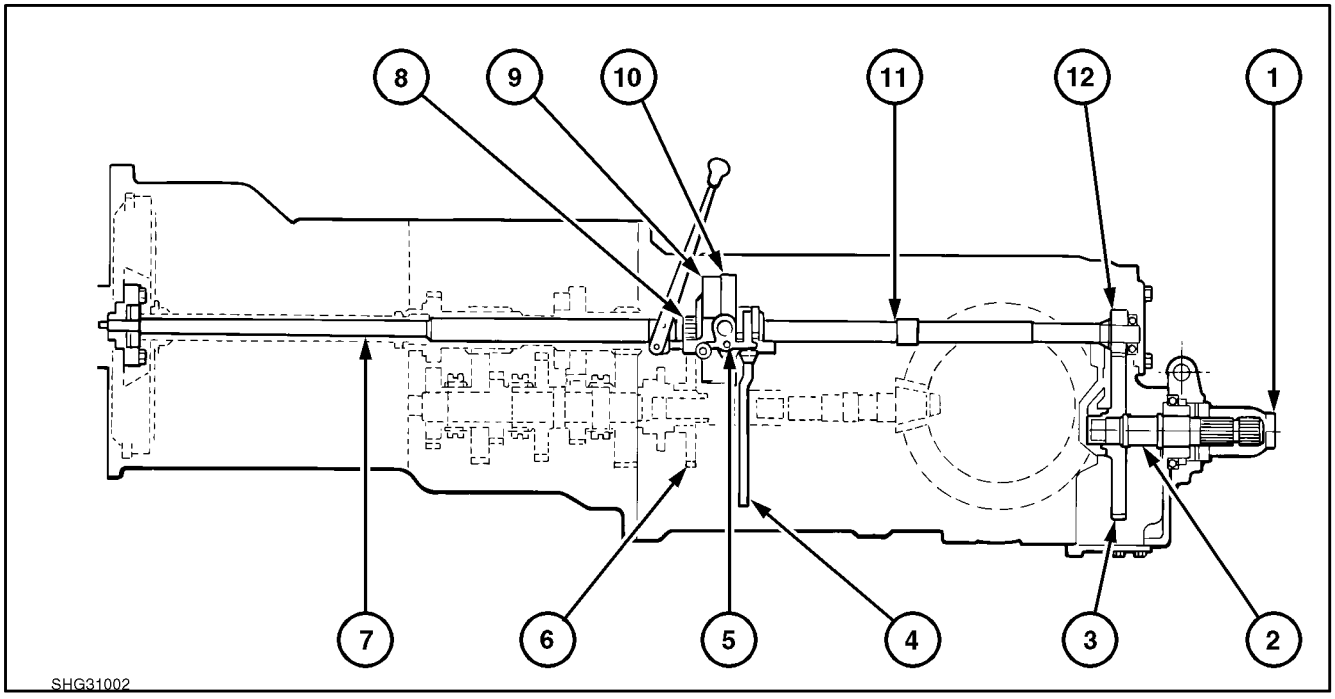

Independent PTO Schematic (Single Speed Shown) 2

1. PTO Output Shaft Cap
2. PTO Output Shaft
3. Driven Gear
4. Oil Supply Pipe
5. PTO Valve Assembly
6. Hydraulic Pump Idler Gear
7. PTO Input Shaft
8. Hydraulic Pump Drive Gear
9. PTO Clutch Assembly
10. Brake Band
11. PTO Rear Shaft
12. Drive Gear

Single Speed PTO

Figure 2, shows in simple form the drive line from the engine to the output shaft.

The PTO input shaft passes through the transmission upper shafts and is splined at both ends into the engine flywheel and PTO clutch hubs.

The PTO rear shaft is splined into the PTO clutch and transmits drive to the output shaft drive gear.

When the PTO is engaged the friction and steel plates within the clutch assembly are clamped together, by the hydraulically operated clutch piston, transmitting drive from the flywheel to the PTO output shaft.

The speed of the output shaft is independent of the transmission or tractor 'ground speed' and is related directly to the speed of the engine.

The PTO clutch for single speed PTO systems, can be either mechanically or electric solenoid operated. When overhauling the clutch, reference must be made to the appropriate Description, Operation and Overhaul Sections in this Chapter.

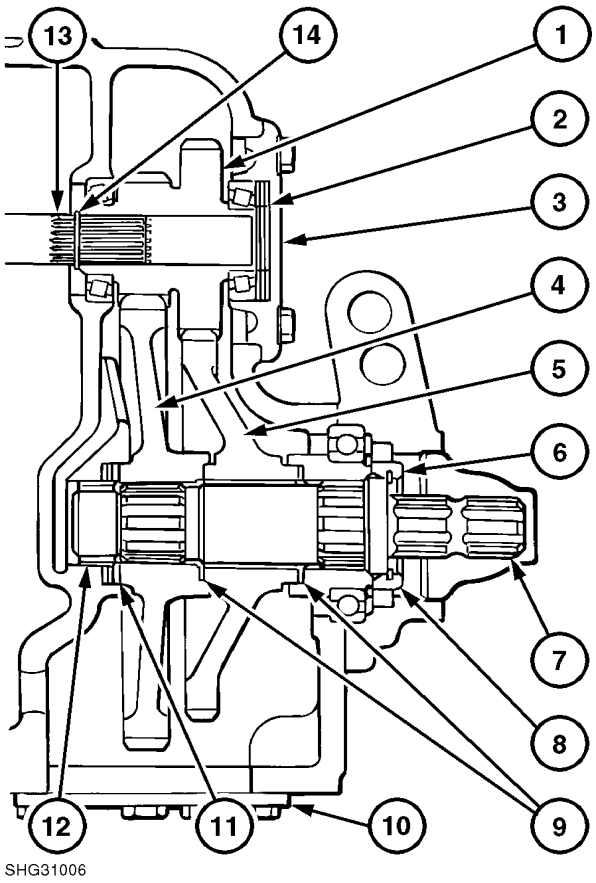

Non Shiftable Two Speed PTO Shaft Installation 3

1. Drive Gear Assembly
2. Drive Gear Bearing Shims
3. Bearing Retainer
4. 540 rev/min Driven Gear
5. 1000 rev/min Driven Gear
6. Output Shaft Snap Ring
7. Output Shaft
8. Sleeve
9. Thrust Washers
10. Sump Cover Plate
11. Needle Thrust Bearing
12. Output Shaft Front Bearing
13. Upper Shaft
14. Snap Ring

Non Shiftable Two Speed PTO

On tractors installed with the non shiftable two speed PTO, drive from the PTO rear shaft is also transferred via a cluster gear and either the 540 or 1000 rev/min gear to the output shaft.

When the 6 splined PTO shaft is installed, splines on the shaft engage with the 540 rev/min gear, Figure 3. This output shaft will now rotate at 540 rev/min when the engine speed is set to 2890 rev/min.

When the 21 splined shaft is installed the splines on this shaft engage with the 1000 rev/min gear enabling the output shaft to rotate at 1000 rev/min when the engine speed is set to 2050 rev/min.

NOTE: *The PTO shafts used on shiftable PTO Systems can not be installed onto tractors with the non shiftable system.*

Pgs 8-9/8-12

MECHANICALLY OPERATED PTO CLUTCH and CONTROL VALVE–OVERHAUL

Removal

1. Remove hydraulic top cover to expose PTO clutch (1) and valve assembly (5), Figure 8.

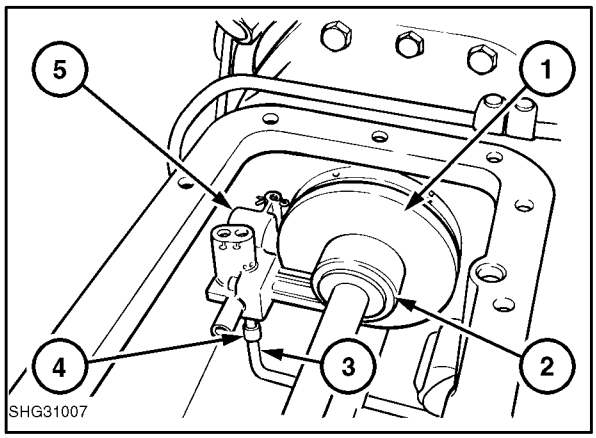

8

2. Remove PTO rear shaft bearing retainer (1) and withdraw shaft, bearing and drive gear (2), Figure 9.

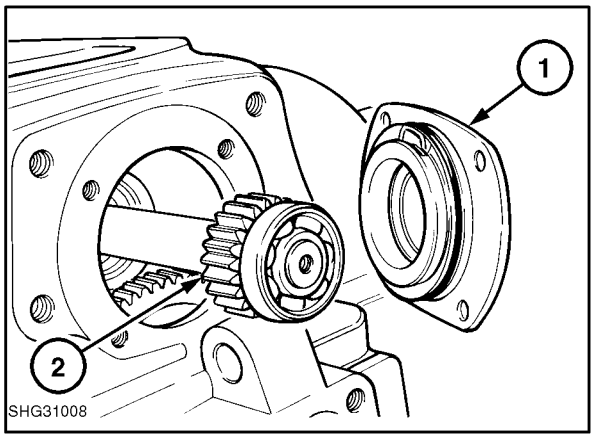

9

3. Remove cooler tube banjo bolt (1) and both locating pins 2 & 3, Figure 10.
4. Remove plastic transfer tube from oil cooler feed port.
5. Release intake tube retaining clip (2), Figure 9.
6. Slide PTO clutch assembly rearwards and disengage linkage to control valve spool.

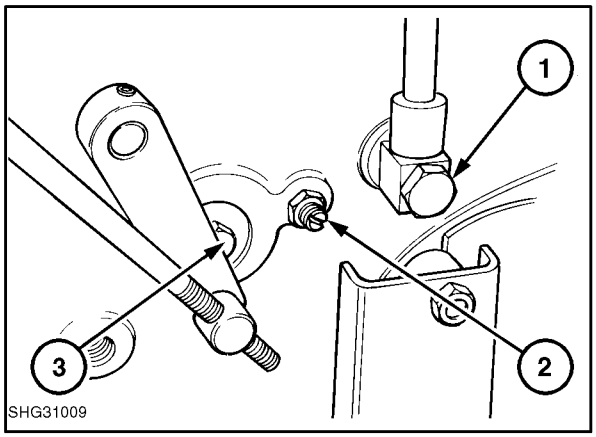

10

7. Remove clutch and control valve assembly, Figure 11.

PTO Clutch and Valve Assembly

1. Brake Band
2. PTO Clutch Housing
3. Clutch Support
4. Valve Assembly
5. Pressure Regulating Valve
6. Control Valve Spool Detent
7. Cooler/Lubrication Circuit Relief Valve

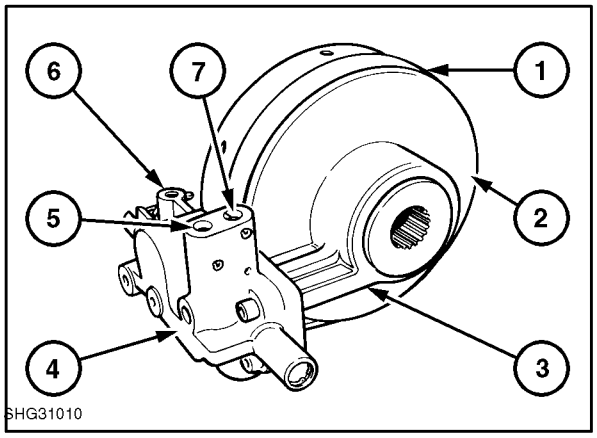

11

Disassembly

1. Remove hub and thrust washer, Figure 12.

PTO Hub and Clutch Assembly

1. Clutch
2. Hub
3. Thrust Washer

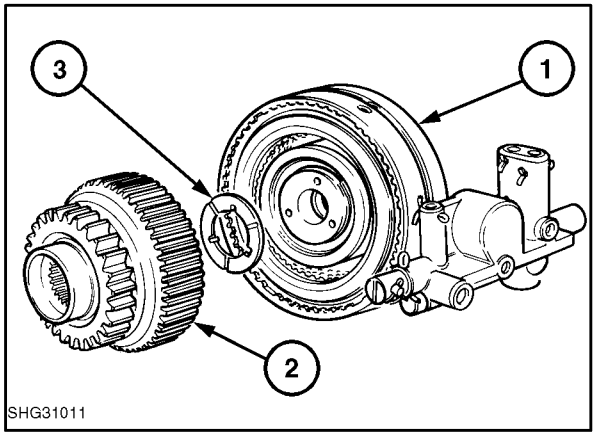

12

2. Slide clutch from clutch support. Remove snap ring and disassemble clutch pack, Figure 13.

Clutch Housing and Drive Plates

1. Clutch Housing
2. Feathering Spring
3. Internally Splined Friction Plates (5 off)
4. Snap Ring
5. Pressure Plate
6. Externally Splined Steel Plates (5 off)

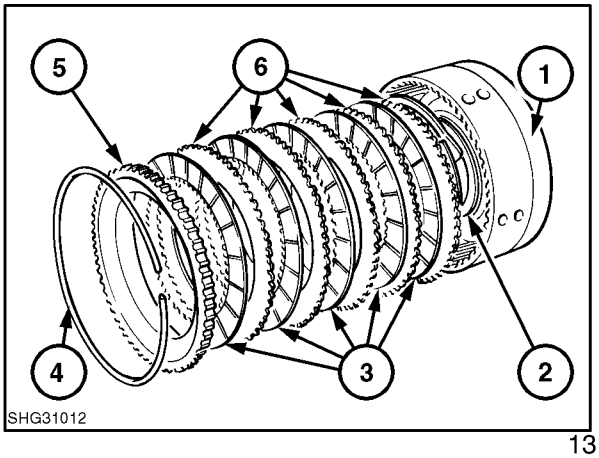

13

3. Using spring compressor FT 4101 or FNH 01312 and suitable press, remove piston and return spring, Figure 14.

Clutch and Valve Assembly

1. Clutch Housing
2. Piston
3. Spring Keeper
4. Snap Ring
5. Return Spring
6. Piston Seals

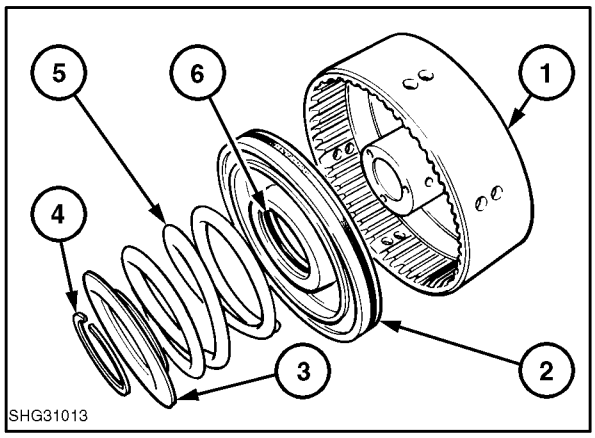

14

4. Examine the cast iron sealing rings on the clutch housing (1), Figure 15. Replace if worn or damaged.

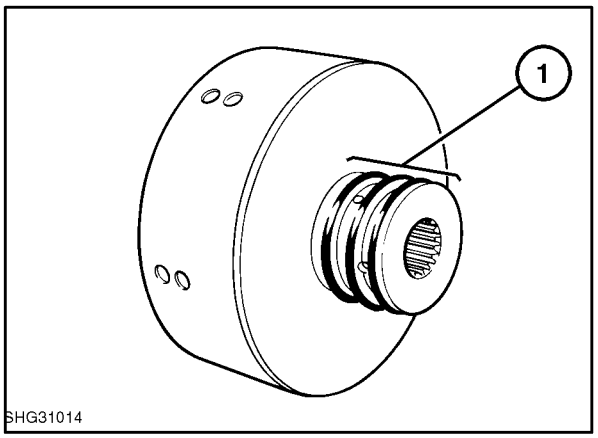

15

5. Disassemble clutch brake band assembly, Figure 16.

6. Separate clutch support from valve body.

PTO Control Valve and Brake Band

1. Pressure Regulating Valve
2. Brake Cylinder
3. Valve Body
4. Brake Band Securing Pin
5. Clutch Support
6. Brake Band
7. Cooler/Lubrication Circuit Relief Valve

7. With reference to Figure 17, disassemble clutch control valve components.

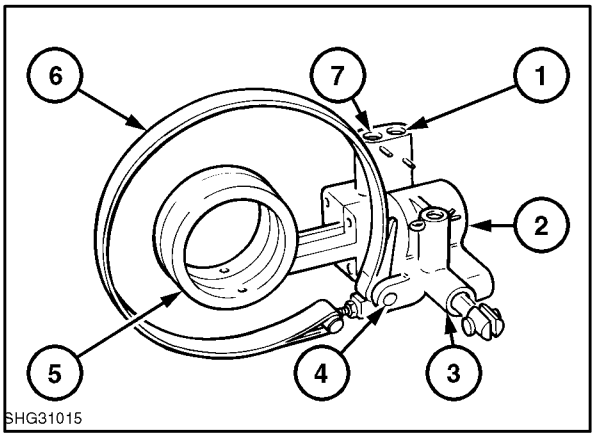

16

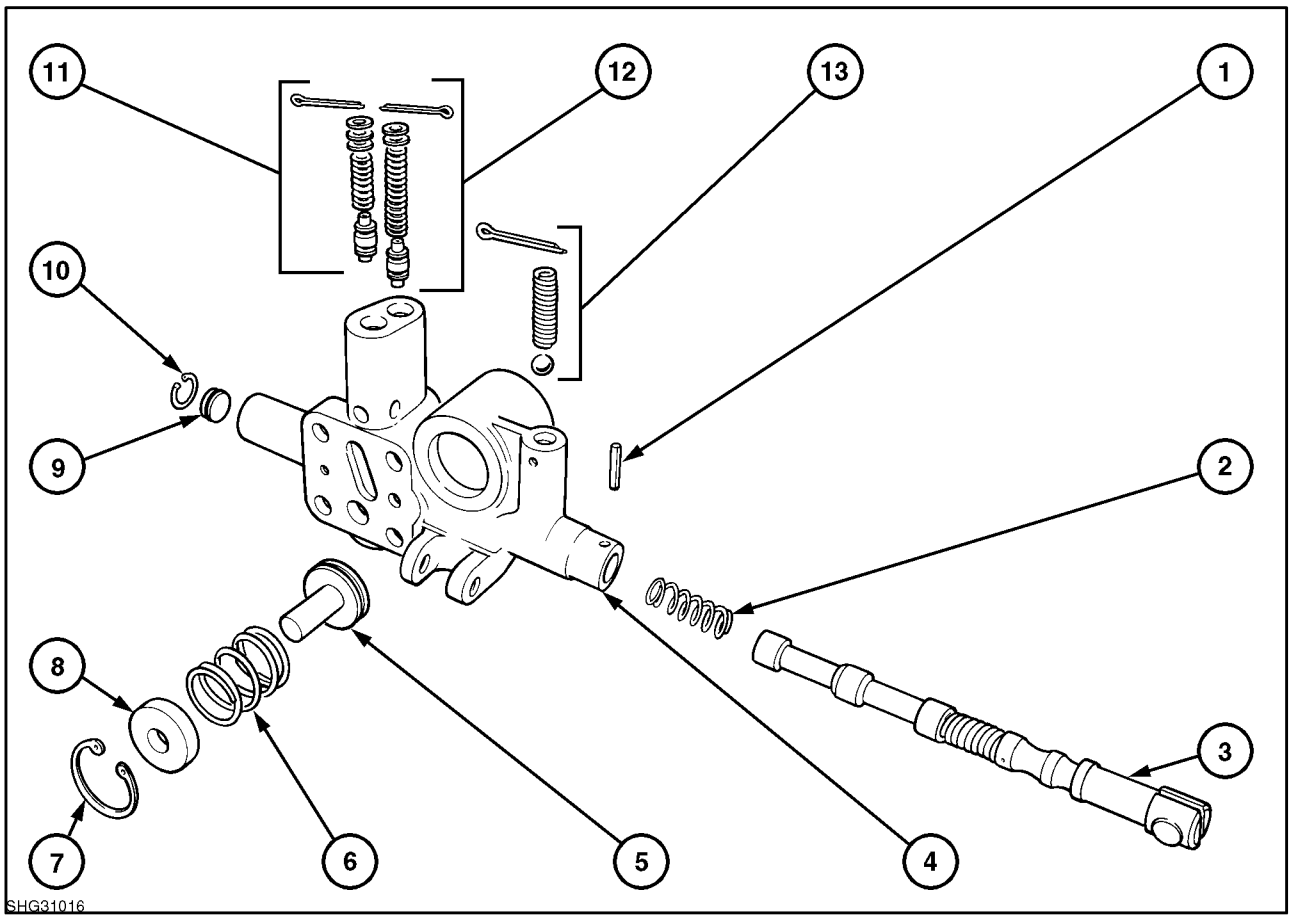

PTO Clutch Control Valve and Brake Components 17

1. Split Pin
2. Spring
3. Control Valve Spool
4. Control Valve Body
5. Brake/Piston
6. Return Spring
7. Snap Ring
8. Guide
9. Plug (chamfer facing spring)
10. Snap Ring
11. Cooler/Lubrication Circuit Relief Valve
12. Pressure Regulating Valve
13. Detent Ball and Spring

INSPECTION AND REPAIR

1. Inspect all components for wear or damage and replace as necessary.

2. Replace all 'O' ring seals.

RE-ASSEMBLY

Re-assembly follows the disassembly procedure in reverse.

1. Install pressure regulating valve with the 'V' groove land positioned '**away**' from the valve spring.

2. If PTO brake band requires replacement soak the band in rear axle oil for at least 3 minutes before installation.

3. Adjust brake band as follows:-

   Slacken locknut (1), Figure 18.

   Screw in adjuster (2), Figure 18, to tighten brake band, until screw torque is 9-11 lbf in (1-1.2 Nm).

   Loosen adjuster screw by $2^1/_2$ turns and tighten locknut.

   To check brake band concentricity after adjustment, hold PTO clutch and brake assembly as shown in Figure 18.

   Position control valve housing at 3 o'clock. The control valve housing should fall to 6 o'clock position under its own weight.

   Lightly bend band to shape if required and repeat adjustment procedure.

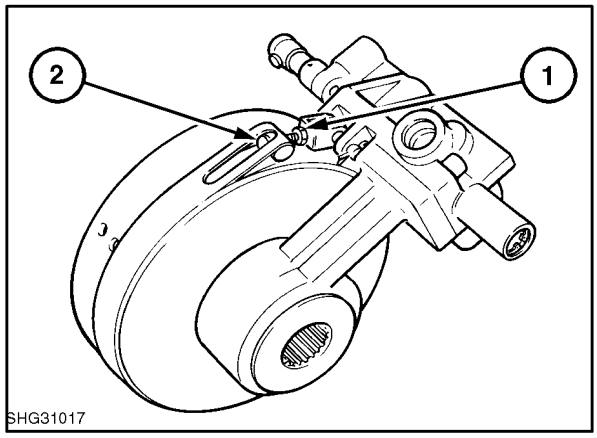

18

INSTALLATION

Installation follows removal procedure in reverse. During installation tighten locating pins as follows:-

Install front pin (3) and tighten to 20-26 lbf ft (27-35 Nm).

Install rear pin (2) and tighten to 9 lbf in (1 Nm).

Loosen rear pin by $^1/_4$ turn and tighten locknut to 15-20 lbf ft (21-27 Nm).

Check clutch is free to rotate.

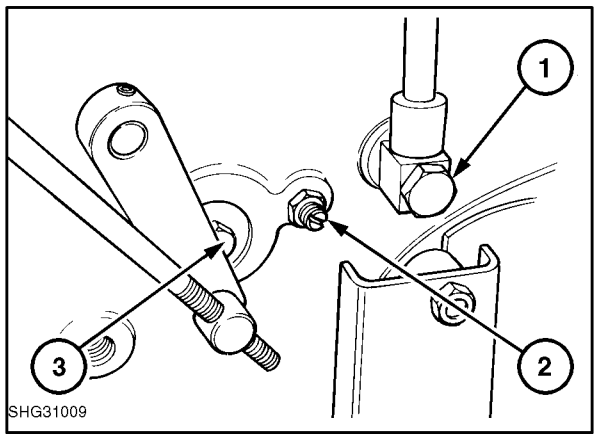

19

PTO Control Valve Retainers

1. Oil Cooler Tube Banjo Bolt
2. Rear Locating Pin and Locknut
3. Front Locating Pin

SOLENOID OPERATED PTO CLUTCH AND CONTROL VALVE DESCRIPTION AND OPERATION

Tractors installed with a solenoid operated PTO clutch can be identified by the unique PTO selector knob, Figure 20. The PTO clutch is engaged by depressing the central button (2) and pulling out the outer know (3).

The knob will remain out while the PTO is engaged and the adjacent warning lamp (1) will be illuminated.

Tap the PTO selector knob sharply in to disengage.

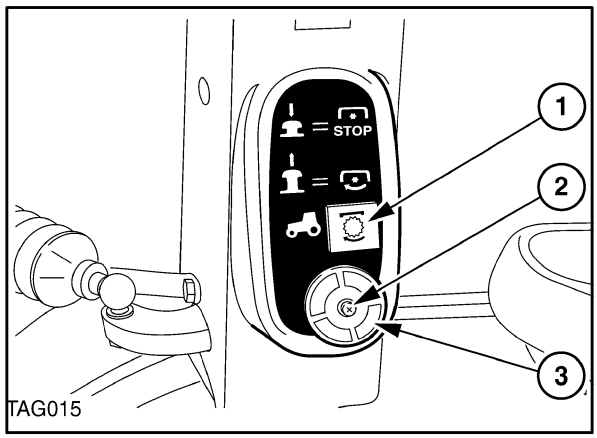

20

To allow the PTO to function, the control module located in the fuse box, Figure 21, **must** receive a signal from the alternator. The module also includes an inbuilt safety feature preventing the PTO from being engaged inadvertently.

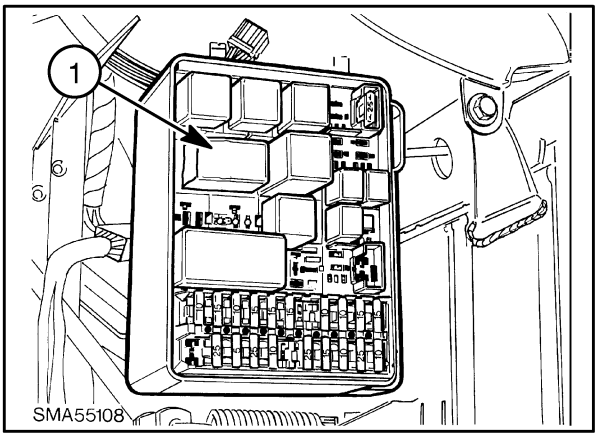

21

When the engine is stopped the signal from the alternator is no longer generated and the PTO is disengaged.

When the engine is re-started, to engage the PTO the selector knob must be re-set and then pulled out to energise the module.

Hydraulic Operation of Solenoid Operated PTO Control Valves

The type of PTO hydraulic control valve installed on tractors is dependent on the hydraulic pump used on the tractor.

Tractors installed with a fixed displacement gear type pump, use low pressure (B) and lubrication circuit (A) regulating valves within the PTO control valve housing (2) to limit oil pressure within these circuits, Figure 22.

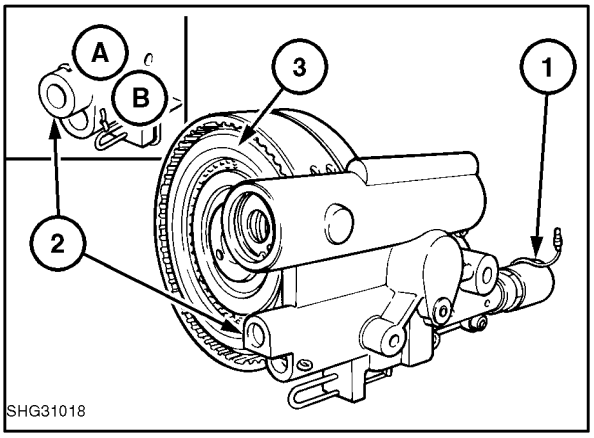

22

Tractors fitted with the variable displacement CCLS hydraulic pump do not require these valves because circuit pressures are regulated by the pressure regulating valve within the CCLS pump and lubrication circuit relief valve within the 16 x 16 transmission control valve cover. Refer to Section 4.

The lubrication circuit relief valve is not required on tractors installed with the variable displacement CCLS hydraulic pump and 12 x 12 transmission.

Never install the incorrect type of PTO valve into a tractor. The PTO valve assembly installed on tractors with fixed displacement gear type pump can be easily recognised by the presence of 'split pins' at 'A' and 'B', Figure 22.

Pg 8-19/8-22 here

SOLENOID OPERATED PTO CLUTCH AND CONTROL VALVE-OVERHAUL

1. Remove hydraulic top cover to expose PTO clutch and valve assembly, Figure 26.

PTO Clutch and Valve Installation

1. PTO Clutch Assembly
2. Rear Shaft
3. Valve Body
4. Clutch Support

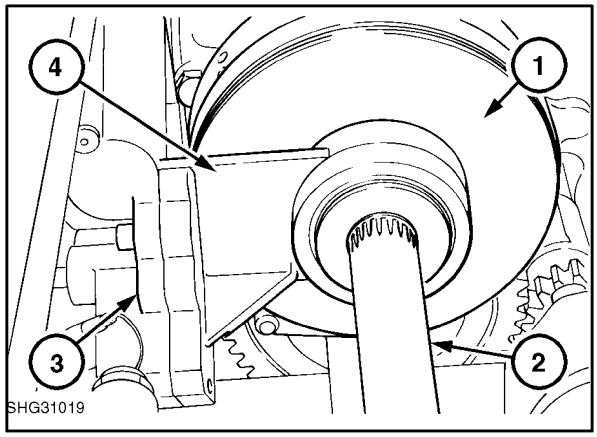

26

2. Remove rear shaft bearing retainer, Figure 27.

PTO Rear Shaft Bearing Retainer

1. Cluster Gear
2. Rear Axle Casing
3. Bearing Cup
4. Retainer
5. Seal

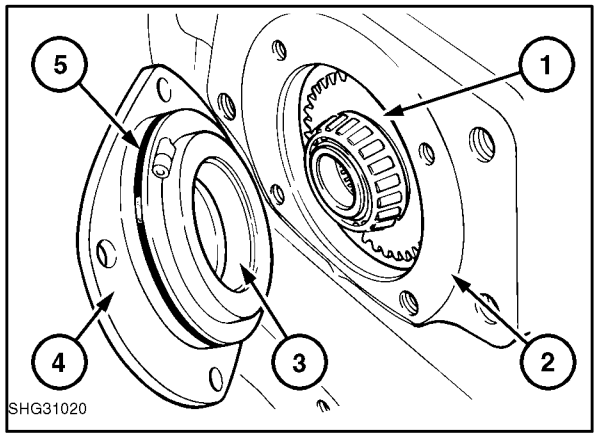

27

3. Withdraw cluster gear, Figure 28.

Cluster Gear Removal

1. Taper Roller Bearing
2. Cluster Gear
3. Taper Roller Bearing

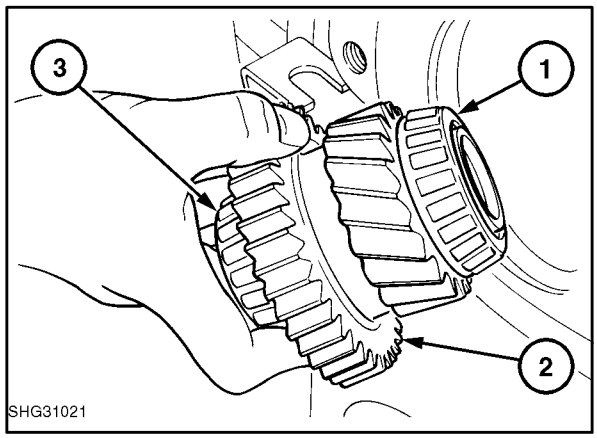

28

4. Remove shims from rear shaft and pull shaft from tractor, Figure 29.

PTO Rear Shaft Removal

1. PTO Clutch Housing
2. Snap Ring
3. Rear Shaft
4. Shims
5. Snap Ring

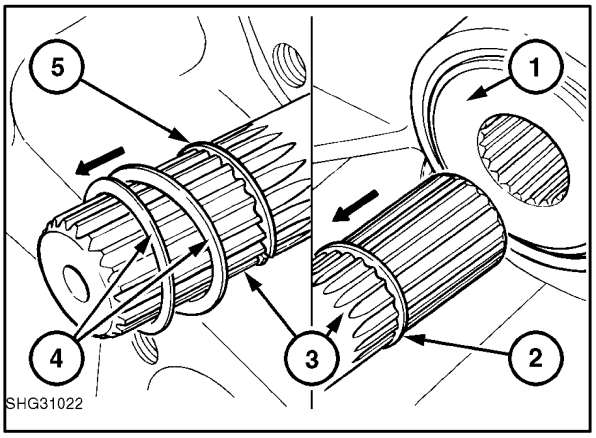

29

5. Pull hydraulic supply pipe retaining clip, located on bottom of PTO valve and disconnect pipe, Figure 30.

PTO Clutch Oil Supply Pipe

1. 'O' Ring Seal
2. Supply Pipe
3. Retaining Clip

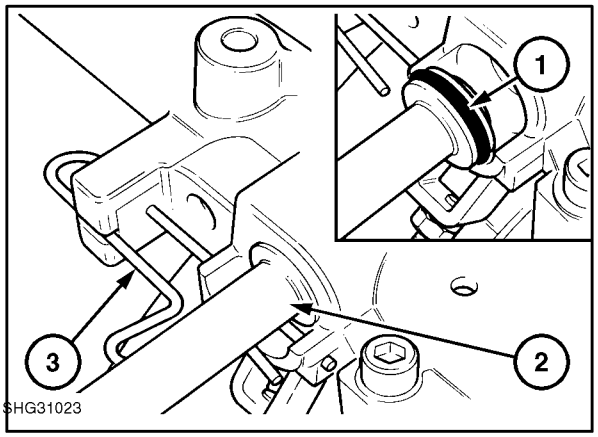

30

6. Where fitted, remove engine mounted gear pump filter assembly on left hand side of rear axle centre housing, Figure 31.

Auxiliary Engine Mounted Pump Filter

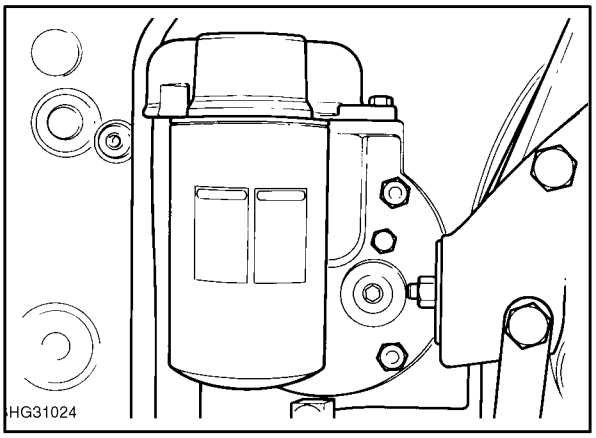

31

7. Remove PTO retainers and banjo bolt on outside of transmission casing, Figure 32.

PTO Control Valve Retainers

1. Plastic Transfer Tube
2. Banjo Bolt
3. Rear Retainer/Adjusting Pin
4. Front Retaining Pin
5. Lubricating Oil Pipe

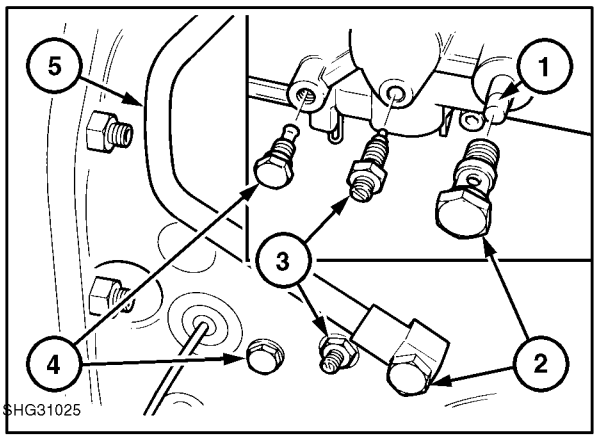

32

NOTE: *Support clutch with hand when removing retainers, Figure 33.*

Supporting PTO Assembly for Removal of Retaining Pins

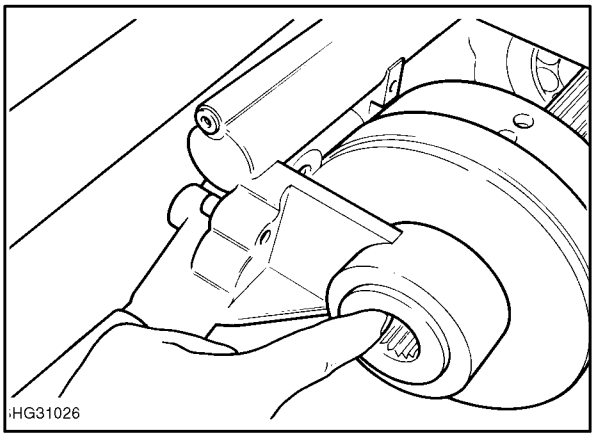

33

8. Remove PTO clutch, valve and hub assembly, Figure 34.

PTO Clutch and Valve Assembly

1. Brake Band
2. Clutch Support
3. Solenoid
4. Valve Body
5. Clutch Housing

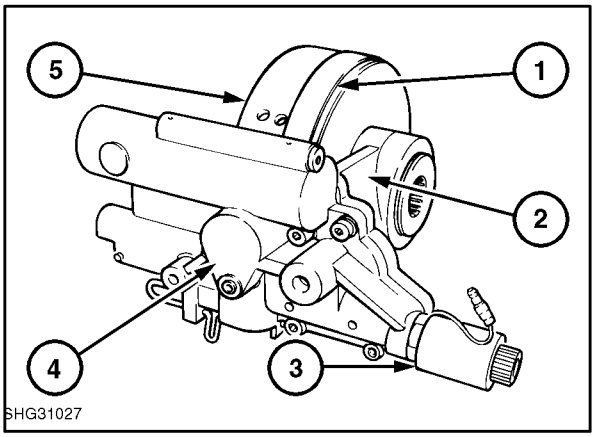

34

9. Identify type of PTO clutch and valve assembly installed, Figure 35.

PTO Clutch and Valve Assembly

1. Solenoid
2. Valve Body
3. Clutch Pack

A* Lubrication Circuit Relief Valve
B* Low Pressure Regulating Valve
* Tractors Installed with Fixed Displacement Gear Type Pump Only

NOTE: *Tractors installed with the CCLS hydraulic pump are not fitted with the low pressure regulating and lubrication circuit relief valve in bores 'A' and 'B'.*

The bore for valve 'A' is empty and bore 'B' contains a plug retained with one single split pin.

***Do Not** install the incorrect type of PTO valve assembly into a tractor.*

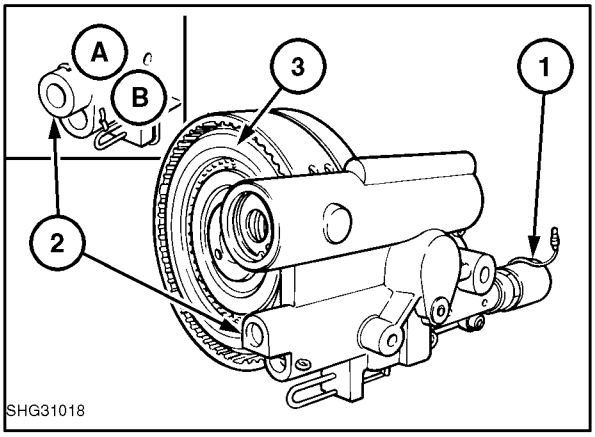

35

10. Remove hub and retrieve thrust washer, Figure 36.

11. Slide clutch from clutch support.

PTO Clutch and Valve Assembly

1. Clutch
2. Hub
3. Thrust Washer

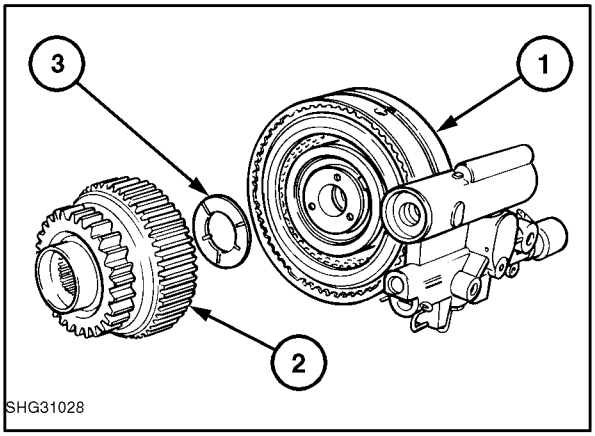

36

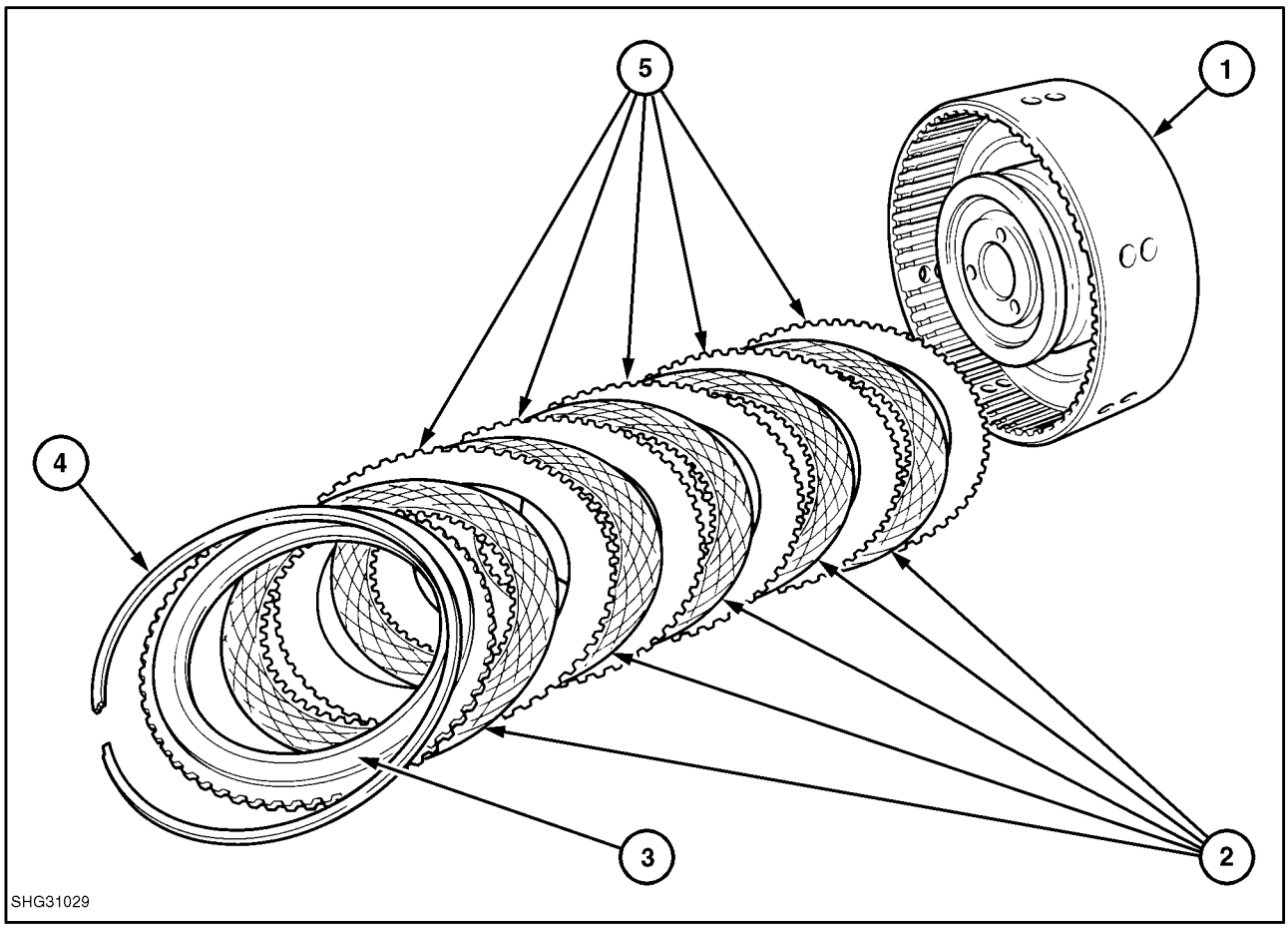

Clutch Housing and Drive Plates 37

1. Clutch Housing
2. Internally Splined Friction Plates (5 off)
3. Pressure Plate
4. Snap Ring
5. Externally Splined Steel Plates (5 off)

12. Remove snap ring and withdraw clutch drive plates, Figure 37.

Clutch and Valve Assembly

1. Clutch Housing
2. Piston
3. Spring Keeper
4. Snap Ring
5. Return Spring
6. Piston Inner Seal

13. Using spring compressor FT 4101 or FNH 01312 and suitable press, remove piston and return spring, Figure 38.

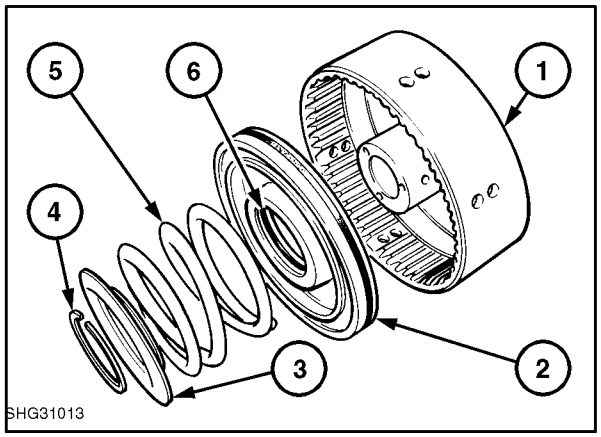

38

14. Examine the cast iron sealing rings on the clutch housing, Figure 39. Replace if worn or damaged.

Clutch Assembly Sealing Rings

1. Cast Iron Sealing Rings (3 off)

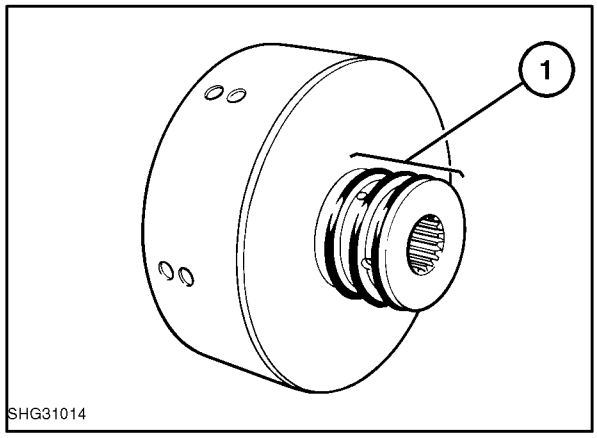

39

15. Separate clutch support from valve body, Figure 40.

Clutch Support and Valve Housing

1. Clutch Support
2. Oil Supply Galleries
3. Gauze Filter Location
4. Valve Body

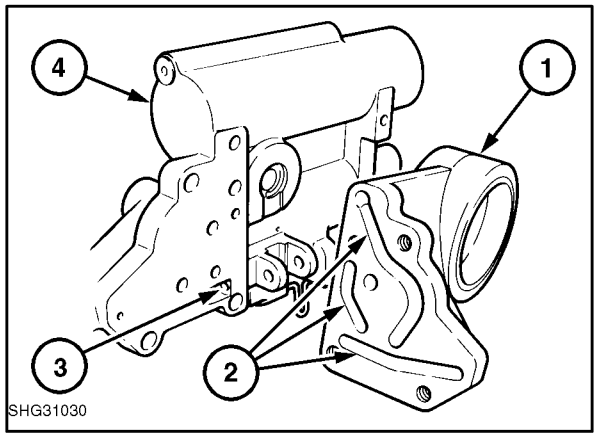

40

16. Remove and wash control valve pilot line fliter, Figure 41.

Control Valve Pilot Line Filter

1. Screen Filter
2. Filter Seat
3. Valve Body

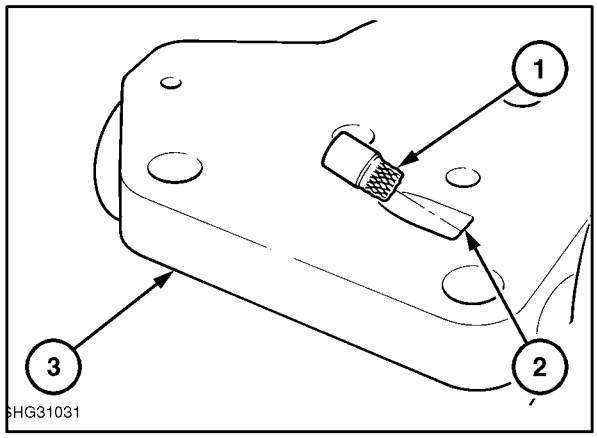

41

17. Remove the clutch brake band, Figure 42.

Clutch Brake Band

1. Valve Body
2. Brake Lever
3. Locating Pin
4. Adjuster
5. Clutch Support
6. Brake Band

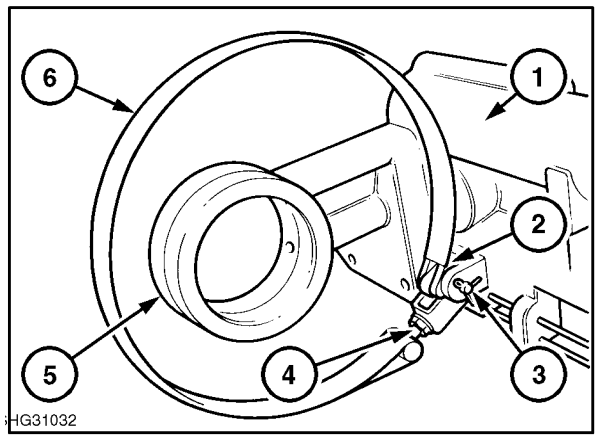

42

18. Remove brake piston components, Figure 43.

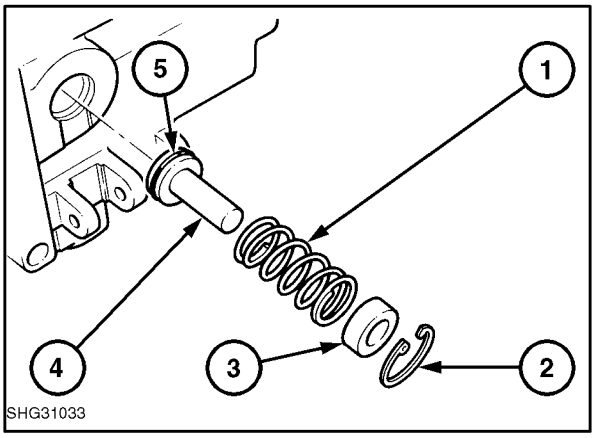

43

Clutch Brake Piston Components

1. Return Spring
2. Snap Ring
3. Spacer
4. Brake Piston
5. 'O' Ring Seal

19. Disassemble PTO control valve assembly. See Figure 44 to Figure 48.

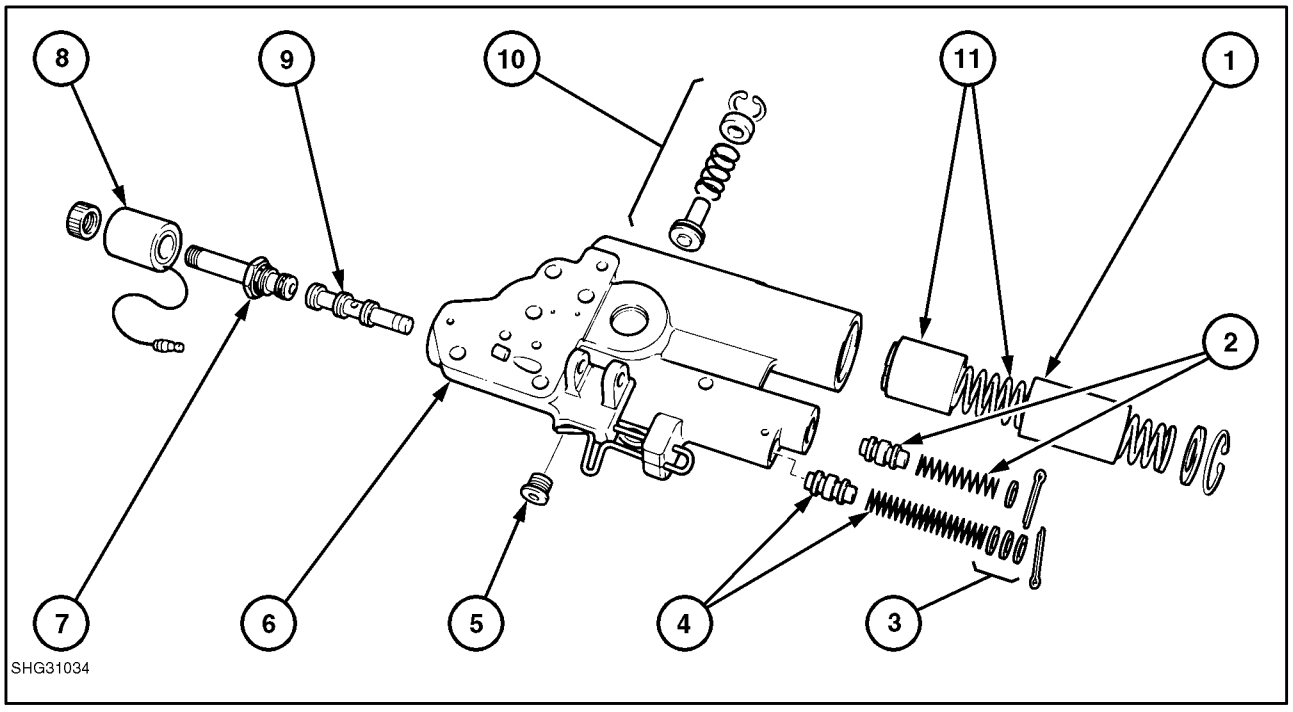

PTO Control Valve Assembly Tractors (with Fixed Displacement Gear Type Pump) 44

1. Sleeve
2. Lubrication Relief Valve and Spring
3. Shims
4. Regulating Valve and Spring
5. Plug
6. Valve Body
7. Solenoid Operated Pilot Valve
8. Solenoid Coil
9. Control Valve Spool
10. Brake Piston Assembly
11. Feathering Valve and Spring

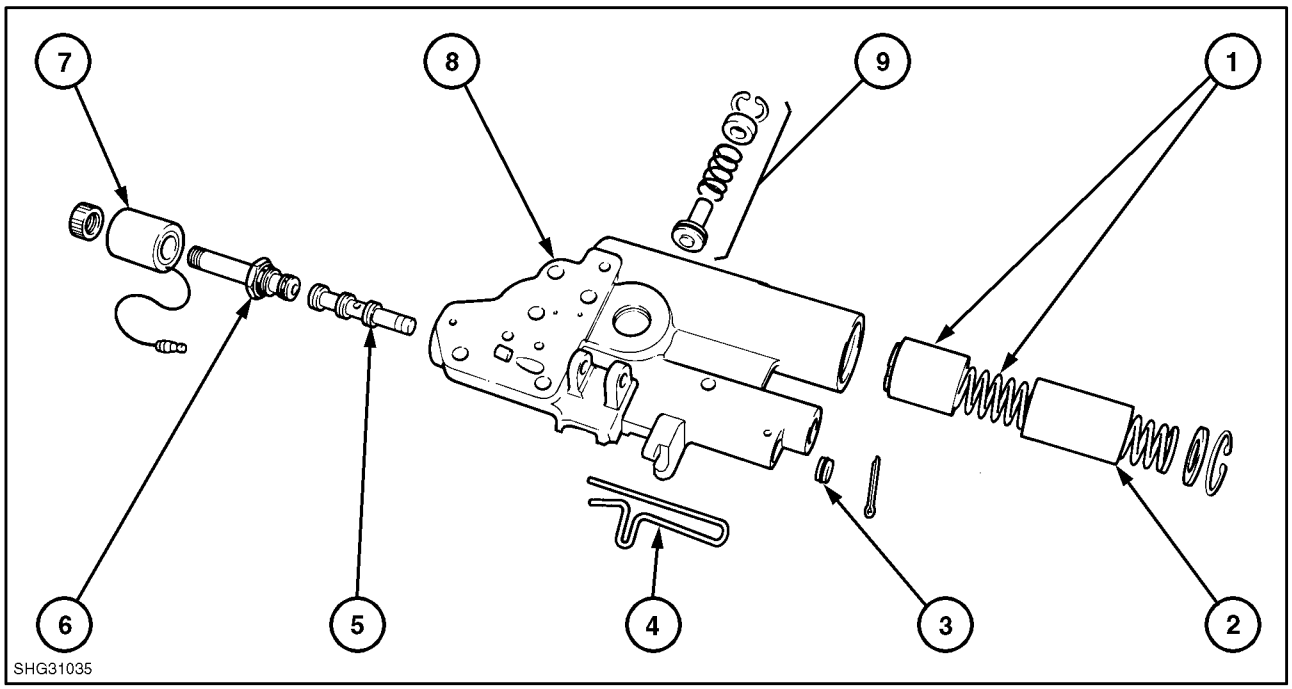

PTO Control Valve Assembly (Tractors with Variable Displacement CCLS Hydraulic Pump) 45

1. Feathering Valve and Spring
2. Sleeve
3. Plug
4. Oil Supply Pipe Retainer
5. Control Valve Spool
6. Solenoid Operated Pilot Valve
7. Solenoid Coil
8. Valve Body
9. Brake Piston Assembly

NOTE: *For location of feathering valve orifice refer to Figure 49.*

Feathering Valve

1. Sleeve
2. Circlip
3. Spacer
4. Feathering Spring
5. Feathering Piston

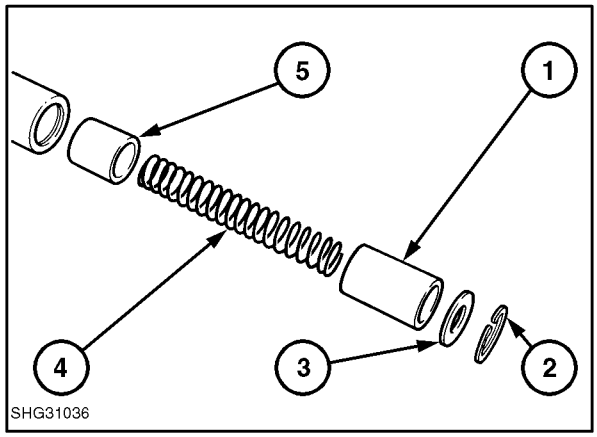

46

Control Valve and Solenoid Components

1. Valve Body
2. Control Valve
3. Pilot Valve
4. Solenoid Coil

NOTE: *The pressure regulating and lubrication circuit relief valves are only fitted on solenoid operated PTO valves installed on tractors with fixed displacement gear type hydraulic pump.*

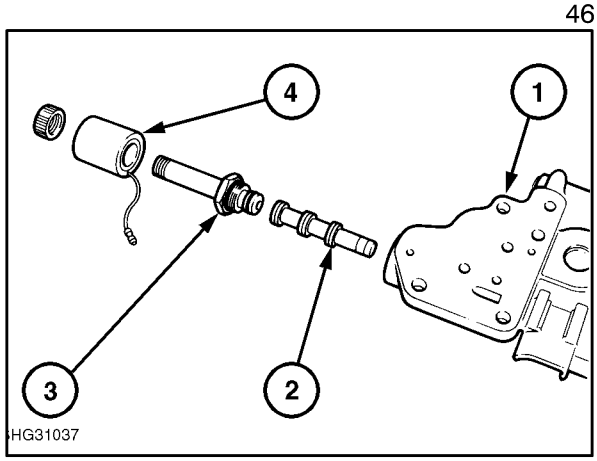

47

Pressure Regulating and Lubrication Circuit Relief Valves

1. Shim
2. Shims
3. Regulating Valve Spring
4. Regulating Valve
5. Lubrication Circuit Relief Valve
6. Lubrication Valve Spring

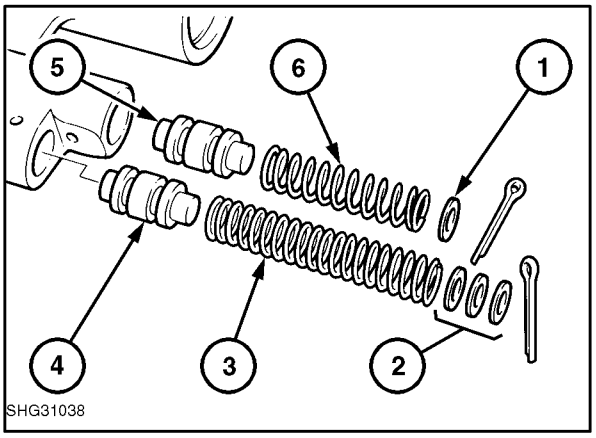

48

INSPECTION AND REPAIR

1. Inspect all components for wear and damage.
2. Replace all 'O' ring seals.

Feathering Valve Orifice

1. Orifice
2. Plug
3. Valve Body

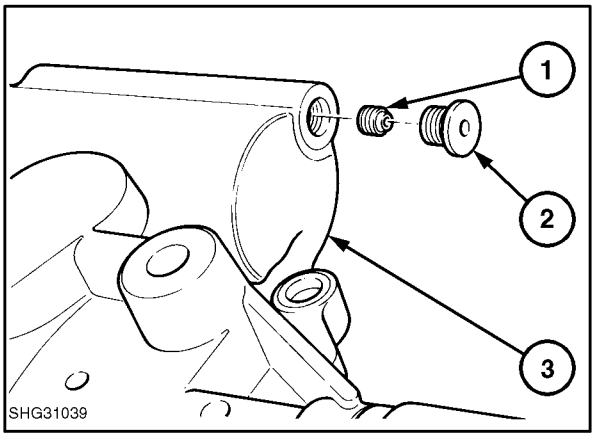

49

3. Ensure the feathering valve orifice is free from obstruction, Figure 49.

RE-ASSEMBLY

Re-assembly follows the disassembly procedure in reverse.

1. If PTO brake band requires replacement soak the band in rear axle oil for at least 3 minutes before installation.
2. Adjust brake band as follows:-

   Slacken locknut (1).

   Screw in adjuster (2), refer to Figure 50, to tighten brake band until screw torque is 9-11 lbf in (1-1.2 Nm).

   Loosen adjuster screw by $2^1/_2$ turns and tighten locknut.

   To check brake band concentricity after adjustment, hold PTO clutch and brake assembly as shown in Figure 50.

   Position control valve housing at 3 o'clock. The control valve housing should fall to 6 o'clock position under its own weight.

   Lightly hammer brake band to shape if required. Repeat adjustment and check procedure.

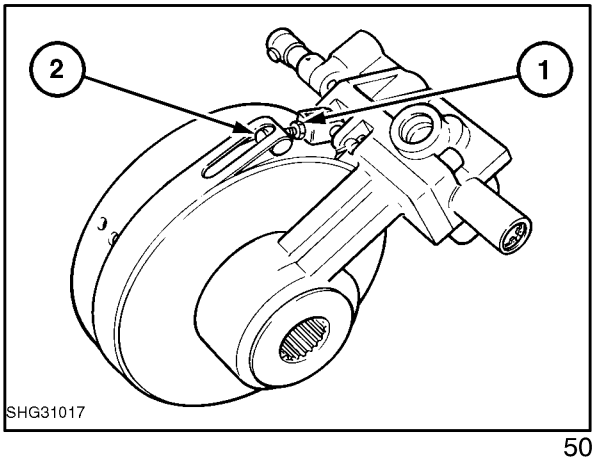

50

INSTALLATION

Installation follows removal procedure in reverse. During installation tighten locating pins as follows:-

1. Install front pin (4) and tighten to 20-26 lbf ft (27-35 Nm).

   Install rear pin (3) and tighten to 9 lbf in (1 Nm). Check that clutch is stiff to rotate.

   Loosen rear pin by $^1/_4$ turn and tighten locknut to 15-20 lbf ft (21-27 Nm).

   Check clutch is free to rotate.

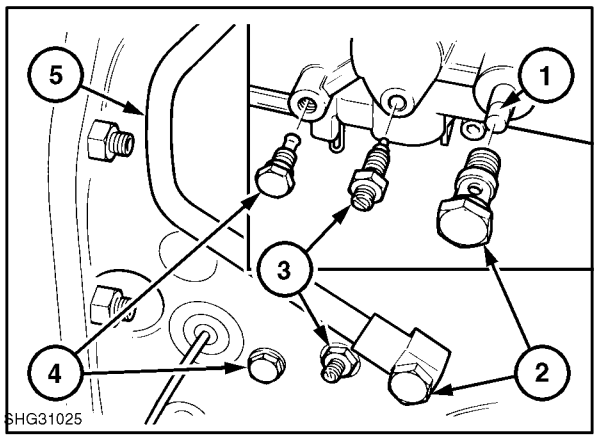

51

PTO SHAFTS AND GEARS-OVERHAUL

SINGLE SPEED PTO SHAFTS AND GEARS

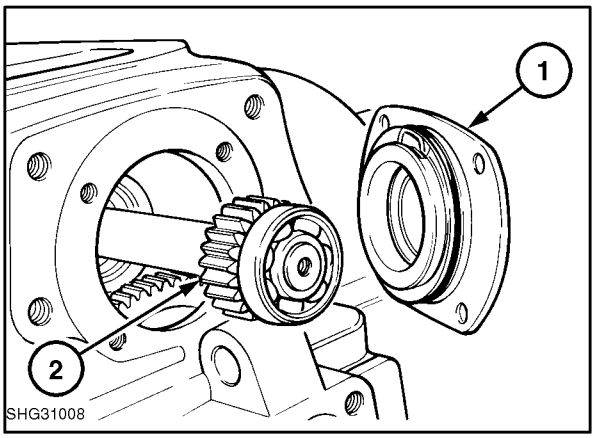

PTO Rear Shaft and Bearing Retainer 52

1. Bearing Retainer
2. Rear Shaft, Gear and Bearing

REMOVAL

With reference to Figure 53.

1. Drain oil from rear axle/transmission.
2. Remove rear shaft assembly from rear of tractor, Figure 52.
3. Where fitted remove drawbar/auto pick up hitch, then remove sump cover.
4. Remove PTO bearing retainer.
5. Support the driven gear, withdraw PTO output shaft and remove gear, thrust washers and bearing.
6. Remove the front bearing, item 11 from the transmission housing.

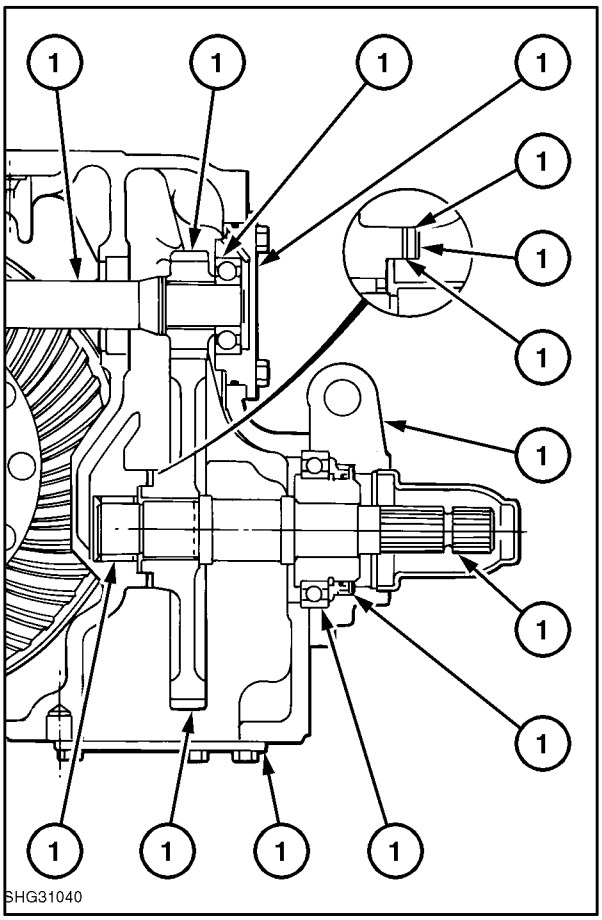

Single Speed PTO Shaft Installation 53

1. Bearing Retainer
2. Thrust Bearing
3. Thrust Washer (thin)
4. Thrust Washer (thick)
5. PTO Bearing Retainer
6. PTO Output Shaft
7. Oil Seal
8. Bearing
9. Sump Cover
10. Driven Gear
11. PTO Shaft Front Bearing
12. Rear Shaft
13. Drive Gear
14. Bearing

INSPECTION

1. Inspect all components for damage and replace where necessary.
2. Replace all seals and gaskets.

RE-ASSEMBLY

Re-assembly follows the disassembly procedure in reverse.

1. Apply sealant, New Holland Tread Lock and Seal, Part Number 82995773, to the rear shaft bearing retainer bolts and tighten to a torque of 50-60 lbf ft (65-85 Nm).
2. Tighten sump cover retaining bolts to a torque of 27-37 lbf ft (37-50 Nm)
3. Tighten the PTO shaft bearing retainer bolts to a torque of 140-170 lbf ft (190-230 Nm).

NON-SHIFTABLE TWO SPEED PTO SHAFTS AND GEARS

REMOVAL

1. Drain oil from rear axle/transmission.
2. Remove rear shaft bearing retainer (4), Figure 54.
3. Withdraw cluster gear (2), Figure 55.
4. Remove shims (4) from rear shaft (3) and pull shaft from tractor, Figure 56.
5. Where fitted remove drawbar/auto pick-up hitch.
6. Remove sump cover.
7. Remove PTO output shaft.
8. Support the driven gears and remove output shaft sleeve and bearing assembly. Refer to Figure 59. Remove driven gears and thrust washers.
9. Remove output shaft front bearing.

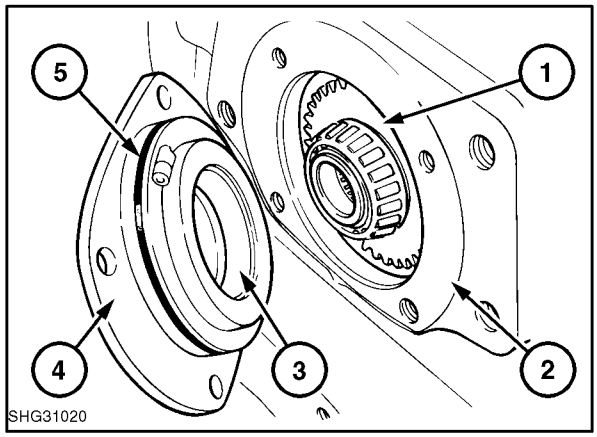

54

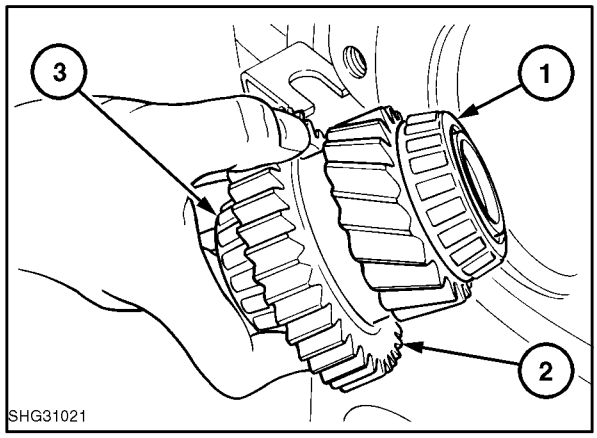

55

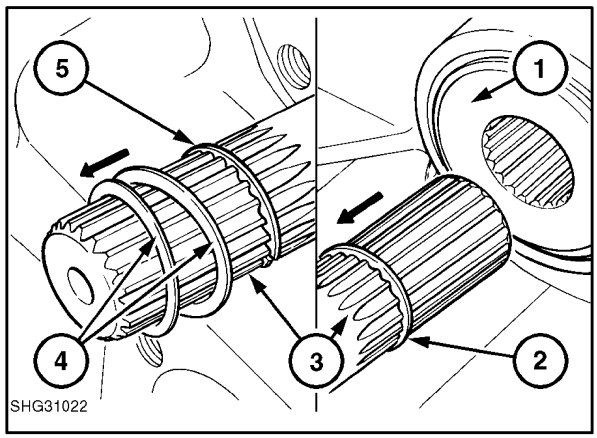

56

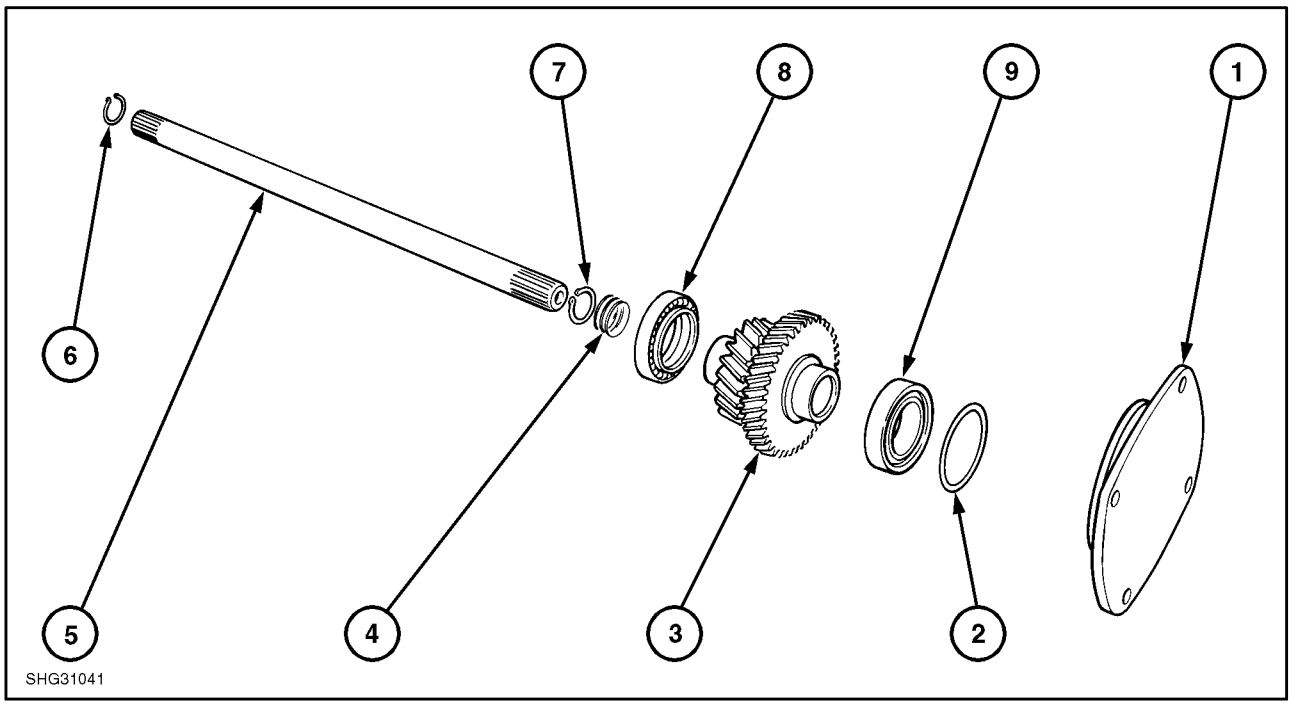

Two Speed PTO Upper Shaft Components 57

1. Bearing Retainer
2. Shims (drive gear end float)
3. Drive Gear Assembly
4. Shims (rear shaft end float)
5. Upper Shaft
6. Snap Ring
7. Snap Ring
8. Bearing
9. Bearing

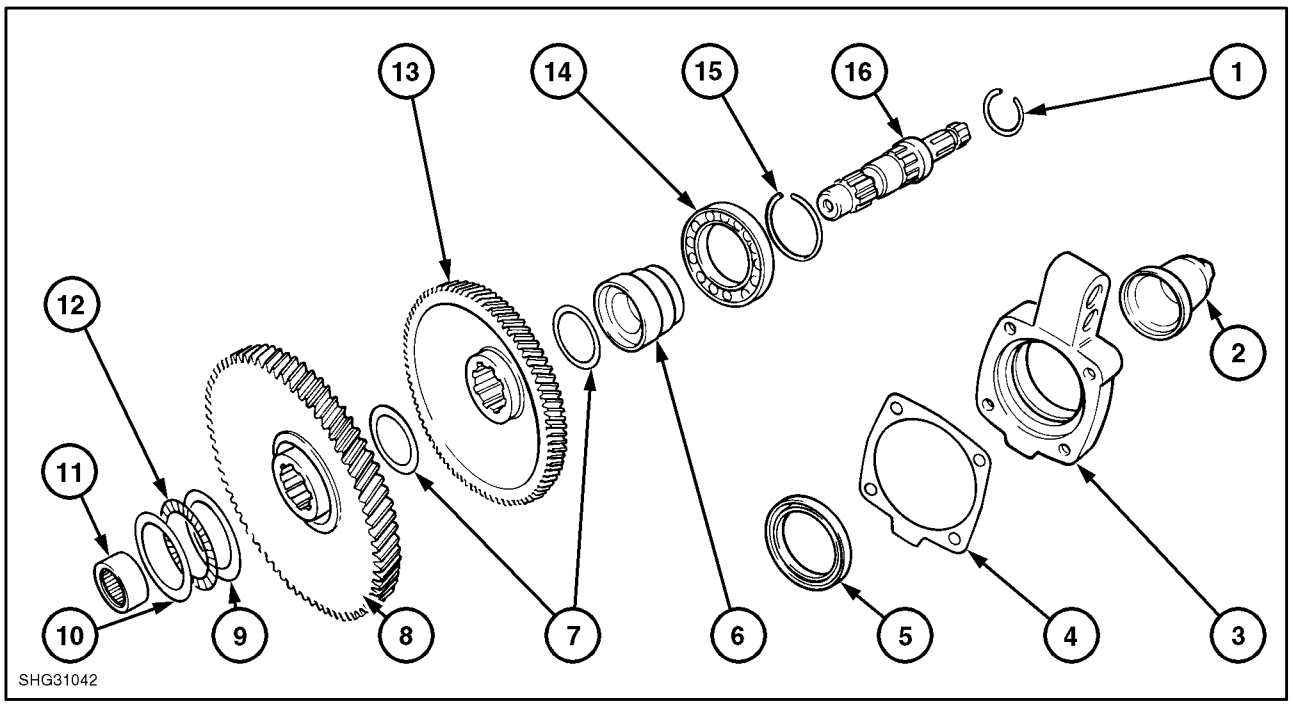

58

Two Speed Non Shiftable PTO Output Shaft and Driven Gears

1. Output Shaft Retaining Ring
2. Output Shaft Cap
3. Output Shaft Bearing Retainer
4. Gasket
5. Output Shaft Sleeve Oil Seal
6. Output Shaft Sleeve
7. Thrust Washers
8. 540 rev/min Drive Gear
9. Thrust Washer (thin)
10. Thrust Washer (thick)
11. Output Shaft Front jBearing
12. Needle Thrust Bearing
13. 1000 rev/min Driven Gear
14. Output Shaft Rear Bearing
15. Snap Ring
16. PTO Output Shaft

INSPECTION

With reference to Figure 57 and Figure 58.

Inspect components for wear or damage and replace as necessary.

Replace all 'O' rings, oil seals and gasket.

RE-ASSEMBLY

Two Speed Non Shiftable PTO Shaft Installation

1. Drive Gear Assembly
2. Shims (drive gear end float)
3. Bearing Retainer
4. 540 rev/min Driven Gear
5. 1000 rev/min Driven Gear
6. Output Shaft Retaining Ring
7. PTO Output Shaft
8. Sleeve
9. Bronze Thrust Washers
10. Sump Cover Plate
11. Thrust Washers and Bearing (see Figure 58)
12. Needle Bearing
13. Rear Shaft
14. Snap Ring and Shims

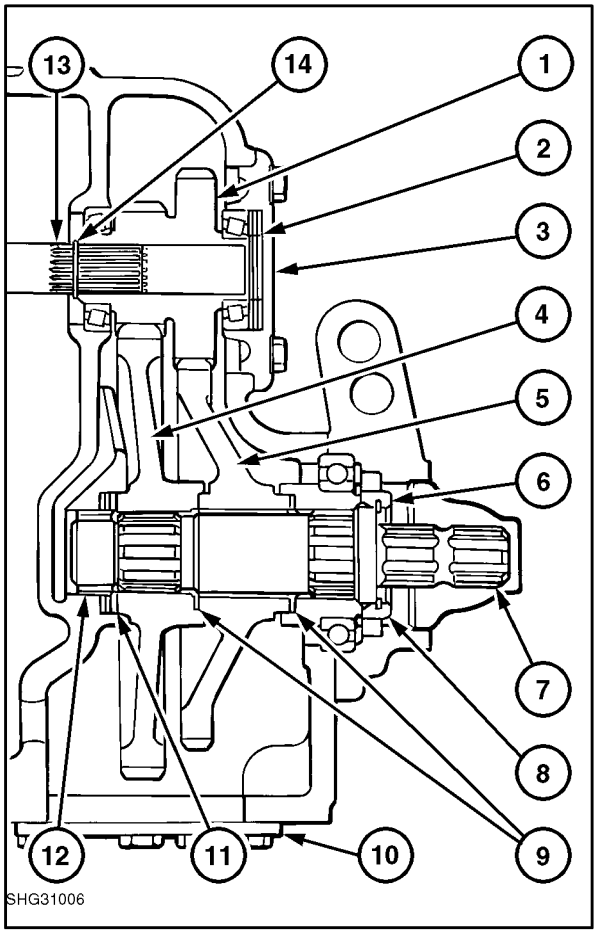

59

Re-assembly follows the disassembly procedure in reverse.

Re-assemble with reference to Figure 59.

If the upper shaft, drive gear assembly bearings, rear bearing retainer or rear axle centre housing has been replaced the following adjustments must be carried out.

Drive Gear End Float Adjustment

1. Locate drive gear and bearing assembly into centre housing.
2. Install approximately 0.080 in (2.0 mm) of shims behind the rear bearing cup. DO NOT fit 'O' ring seal.
3. Locate bearing retainer (1) (with word 'TOP' upwards) and tighten bolts sufficiently to ensure bearings are seated.
4. Measure the gap at several locations to determine average gap, Figure 60.

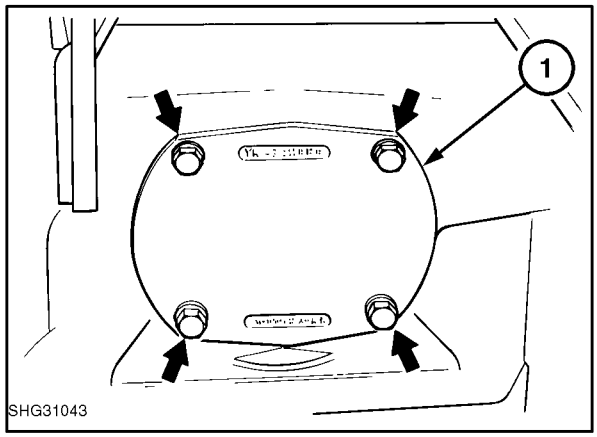

60

5. Calculate shim thickness required:-

Shims thickness Installed	0.080 in	2.03 mm
Average Gap	0.014 in	0.36 mm
(subtract)	0.066 in	1.67 mm
End Float	0.004 in	0.10 mm
(subtract)	0.062 in	1.57 mm
Shims Thickness Required	**0.062 in**	**1.57 mm**

6. Install shim thickness behind bearing cup.

7. Install rear shaft shim(s) removed during disassembly.

8. Install bearing retainer using new 'O' ring seal.

Rear Shaft End Float Adjustment

1. Using feeler gauge (1) check upper shaft (2) end float, Figure 61.

2. Remove/add shims Item 14, Figure 59 between rear snap ring and front bearing to achieve end float of 0.018-0.040 in (0.46-1.0 mm).

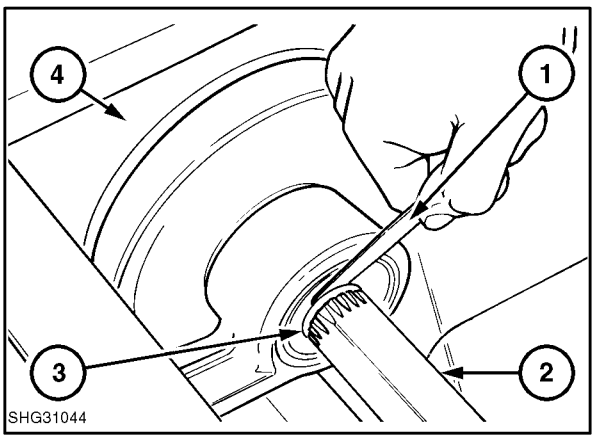

61

INDEX

Independent power take off systems 8-2
Mechanically operated PTO clutch and control valve 8-9
PTO fault finding and specifications 8-4
PTO shafts and gears 8-32
PTO systems description and operation 8-6
Solenoid operated PTO clutch and control valve 8-17
Torques 8-3

SECTION 9
AIR CONDITIONING
CONTENTS

SPECIFICATIONS 9-2

PRINCIPALS OF AIR CONDITIONING 9-4

SYSTEM COMPONENTS – DESCRIPTION AND OPERATION 9-8

FAULT FINDING AND TESTING THE AIR CONDITIONING SYSTEM 9-15

COMPONENT OVERHAUL 9-37

INDEX 9-53

AIR CONDITIONING

SPECIFICATIONS

Refrigerant Specification	New Holland Specification 82000810 (R134a)
Refrigerant Charge	1.5 kg (3.31 lbs)
Compressor Oil Specifications	New Holland Specification 82008750 (PAG Type) (ISO 100 Viscosity) Sanden SP20
Refrigerant Oil Capacity (Compressor and system)	186 cc-228 cc

Cooling capacity @ 22° C - 49° C (75° F - 120°F) ambient. 4.5 kW Typical
(Actual capacity dependent on system control operator settings)

Combined High/Low Pressure Switch (Mounted Adjacent to Compressor)	
Low Pressure Switch	
On	2.06 bar (29.9 lbf/in^2)
Off	1.96 bar (28.4 lbf/in^2)
High pressure switch	
On	21 bar (299 lbf/in^2)
Off	26 bar (384 lbf/in^2)
Low Pressure Cut Out Switch (Mounted in Cab Roof)	
On	2.3 bar (34 lbf/in^2)
Off	0.7 bar (10 lbf/in^2)

Temperature Cycling Control Switch

Switch Setting	On	Off
Minimum Cooling	21° C	18° C
Maximum Cooling	5° C	2° C

COMPRESSOR

Manufacturer and Type	Sanden SD7H15 (model 7865)
Compressor Clutch and Pulley Air Gap	0.4-0.8 mm (0.016 and 0.031″)
Drive Belt Tension	Automatic Belt Tensioner

TORQUES

Compressor Cylinder Head Bolts		24.5-26.5 Nm (18-19.5 lbf.ft)
Compressor Clutch Front Plate retaining Bolt		11.0-14.0 Nm (8-10 lbf.ft)
Self-sealing Couplings	small	40-54 Nm (29-40 lbf ft)
	large	54-68 Nm (40-50 lbf ft)
Compressor Mounting Bolts		20.5-25.5 Nm (15-19 lbf.ft)

SPECIAL TOOLS

Certified Refrigerant Recover,Recycling and Recharge Equipment suitable for the type of refrigerant gas used on tractor are required when servicing air conditioning systems.

This special equipment is available through recognised suppliers of air conditioning equipment. Refer to the Tool supplier for details on the latest equipment available for servicing the air conditioning system.

Vacuum/charge Portable system	New Holland Tool No.294030
Recovey/recharge Portable system	New Holland Tool No.294048
Evaporator and condenser cleaner	New Holland Tool No.293831
Expansion valve tape	New Holland Tool No.293826
Electronic Gas Leak Detector	New Holland Tool No.294036
Manifold Gauge Set (Where required)	OTC/V.L Churchill Ltd Part No FNH00172
Quick Release Coupling Tool	New Holland Tool No.295031
COMPRESSOR TOOLS:	
Sanden SDH715 KIt	OTC/V.L Churchill Ltd Part No. NH.50-100

SAFETY PRECAUTIONS

WARNING

Before overhauling an air conditioning system read and observe the following Safety PrecautionsIf a repair or replacement becomes necessary, ensure that only certified Air Conditioning technicians are employed, using approved equipment to effect repairs. Do ***not*** *attempt to disassemble the air conditioning system, It is possible to be* ***severely frostbitten or injured*** *by escaping refrigerant.*

IMPORTANT: *Do* ***not*** *allow refrigerant to escape into the atmosphere.*

Refrigerant must be handled with care in order to AVOID HAZARDS.

Undue direct contact with liquid refrigerant can produce freezing of skin and eyes.

Keep the refrigerant container and air conditioning system away from flame or heat sources, the resulting pressure increase can cause the container or system to explode.

If in direct contact with open flames or heated metal surfaces, the refrigerant will decompose and produce products that are toxic and acidic.

Make sure to comply with the following indications and simple precautions to avoid any risk of injury:

- Never discharge refrigerant into the atmosphere. When servicing air conditioning units a certified refrigerant recovery unit operated by a certified technician must be used.
- When discharging the refrigerant in the system make sure you are operating in well-ventilated premises with good air circulation and far away from open flames.
- When charging and discharging the system always wear goggles and take suitable precautions to protect the face in general and the eyes in particular, from accidental spillage of the refrigerant fluid.
- The oil and refrigerant mixture inside the air conditioning system is pressurized. Consequently, never loosen fittings or tamper with lines unless the system has been properly discharged.
- Before loosening any connection, cover the fitting in question with a cloth and wear gloves and goggles in order to prevent refrigerant from reaching the skin or eyes.
- In the event of an accident, proceed as follows:-

  If the refrigerant has reached the eyes, wash them immediately with copious amounts of sterilised water or mains pressure tap water and transfer to hospital for immediate medical help.

  If the refrigerant has touched the skin, wash with cold water and transfer to hospital for immediate medical help.

PRINCIPALS OF AIR CONDITIONING

The function of the air conditioning system is to improve the operator's comfort by cooling the air temperature inside the cab and reducing the humidity level.

This temperature control is achieved by absorbing the heat within the cab into a refrigerant and then allowing the heat absorbed by the refrigerant to be transferred to the outside air

In order to achieve this heat transfer the following principals of heat generation and transfer are applied within the air conditioning system.

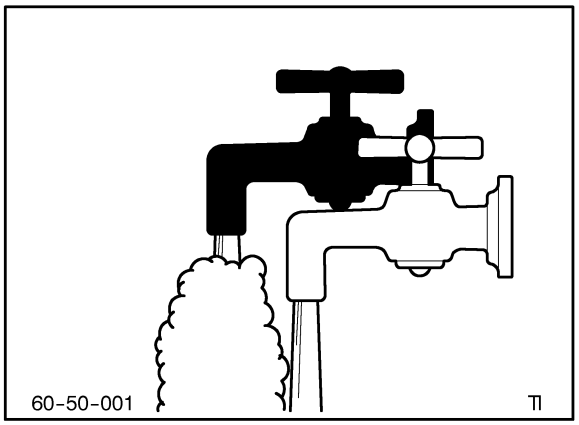

1

1. When two bodies of different temperature come together heat is transferred from one to another. On air conditioning systems an evaporator is used to hold the low temperature refrigerant which absorbs the heat from the air within the cab.

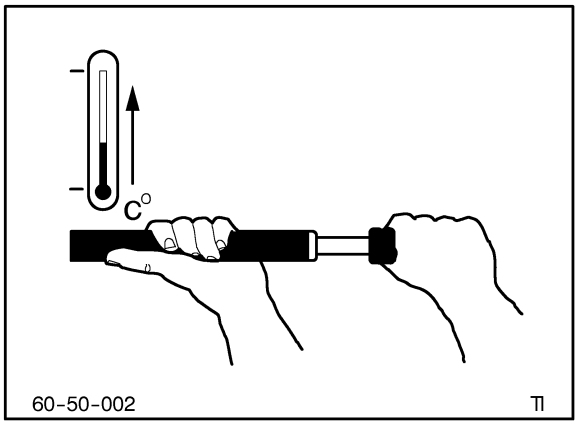

2

2. When a gas is pressurised the temperature of the gas will rise. In air conditioning systems the increase in pressure is achieved using a compressor.

3. When a gas is cooled it will condense into a liquid. In the air conditioning system a condenser is used to cool the gas and the resulting liquid is stored in a receiver dryer.

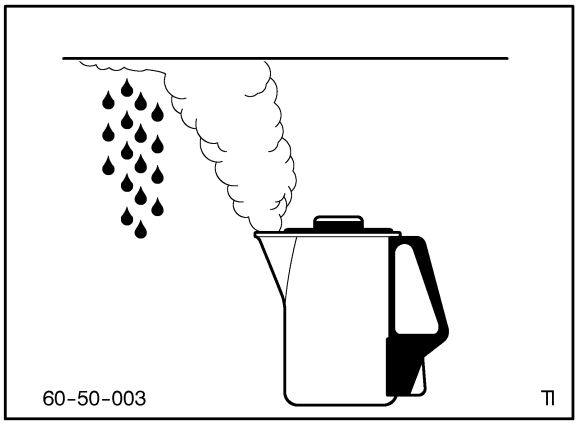

3

4. When a liquid is atomized through an orifice, the temperature of the resultant vapour will drop. The low temperature of the atomized liquid will then absorb heat from its surroundings. On air conditioning systems the refrigerant is atomized using an expansion valve.

It can now be seen that the principal components of an air conditioning system are:-

- Refrigerant
- Evaporator
- Compressor
- Condenser
- Receiver Dryer
- Expansion Valve

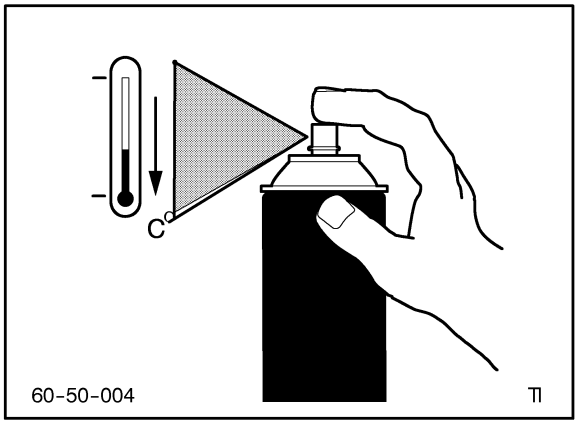

4

Figure 5, uses the examples above to illustrate the air conditioning cycle.

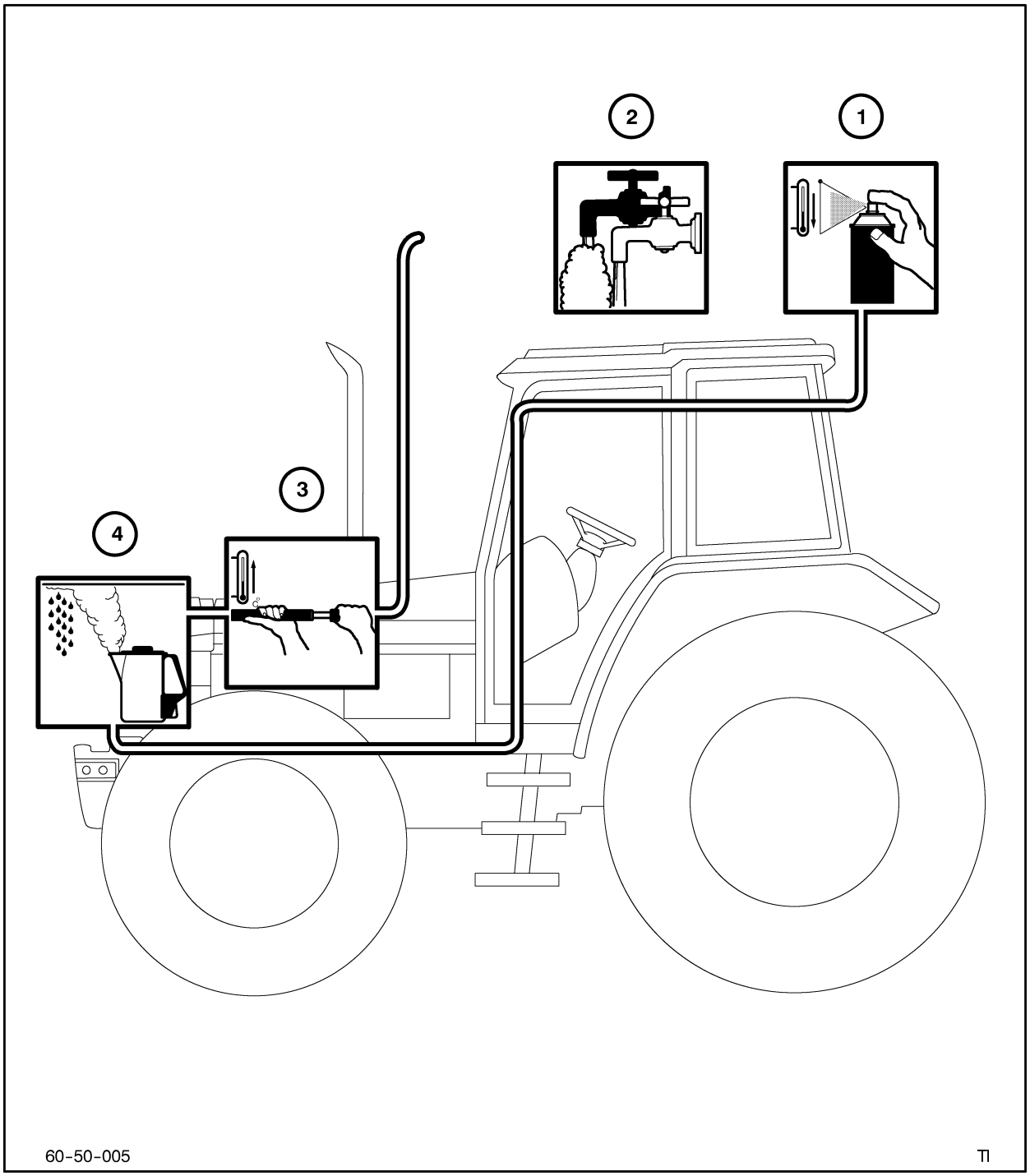

Air Conditioning Principal of Operation 5

1. Expansion Valve - Atomizes Liquid Refrigerant Before Passing to Evaporator
2. Evaporator- Absorbs Heat From Air In Cab
3. Compressor - Compresses and Raises Temperature Of Refrigerant Gas
4. Condenser, Evaporator and Dryer - Converts Refrigerant from Gas to a Liquid

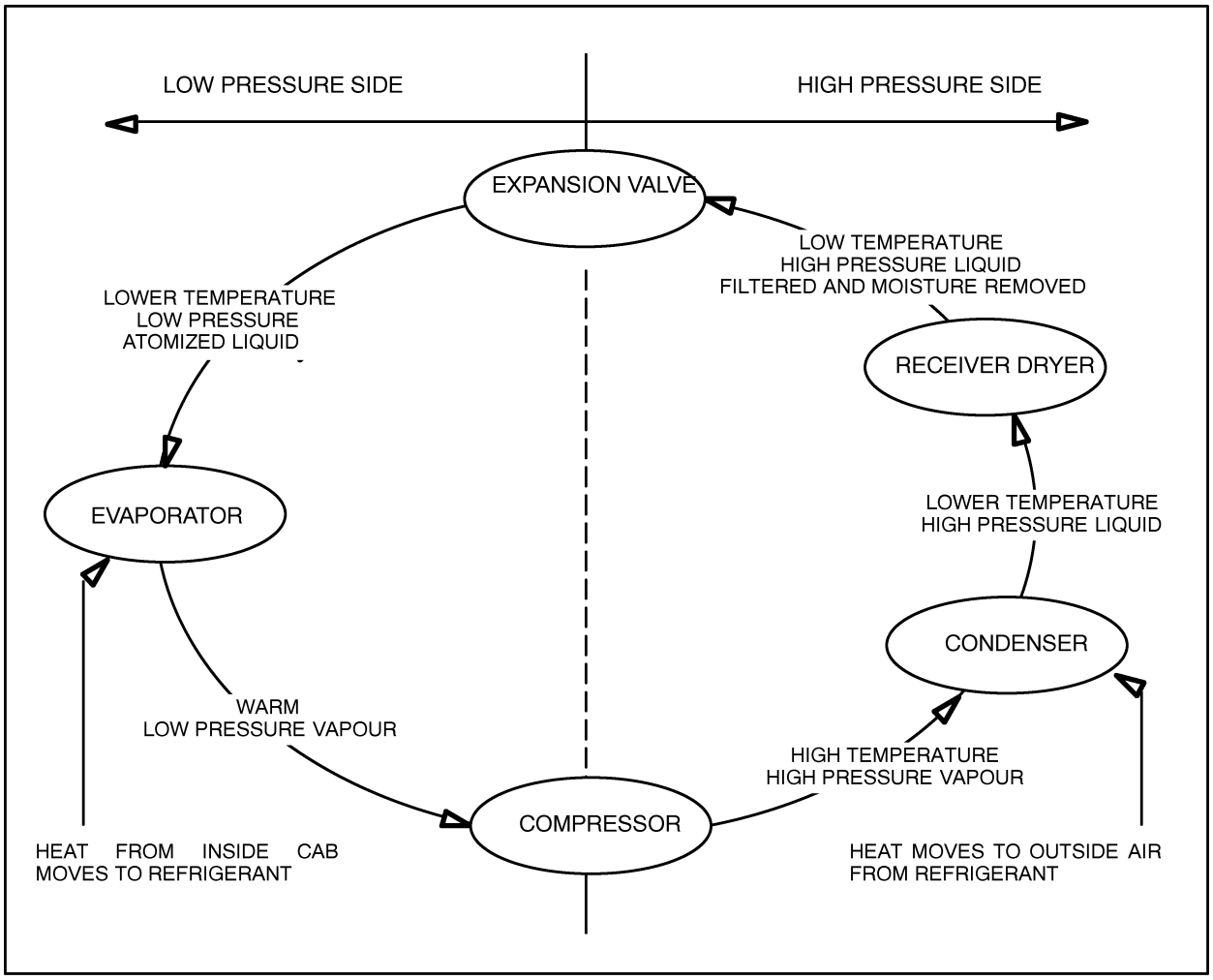

Air Conditioning Flow Diagram 6

Figure 6, shows in schematic form the flow of refrigerant through the five major components of an air conditioning system. Refer to, Figure 7, for the location of these components on the tractor.

Refrigerant is drawn into the compressor as a cool, low pressure vapor which is compressed and then pumped out as a hot, high pressure vapor to the condenser.

As the hot, high pressure vapor passes through the condenser core it gives off heat to the cooler outside air, being drawn past the fins by the engine cooling fan.

By giving off heat to the outside air, the vapor is condensed to a liquid which moves under high pressure to the receiver dryer where it is stored until released to the evaporator by the temperature sensing expansion valve.

As liquid refrigerant passes through the metered orifice in the expansion valve the refrigerant changes from a high pressure liquid to a low pressure atomized liquid with a lower temperature.

This low pressure, low temperature, atomized liquid enters the evaporator coils and absorbs heat from the cab warm air blown across the coils and fins by the cab blower motor. The refrigerant now changes from a cold low pressure atomized liquid to a warm low pressure vapor and leaves the evaporator outlet, moving to the suction (low pressure) side of the compressor to repeat the cycle.

As this heat loss is taking place, moisture (humidity) in the cab air will condense on the outside of the evaporator and drain off as water through the drain hoses attached to the evaporator drain pan, thereby reducing the humidity level of the cab.

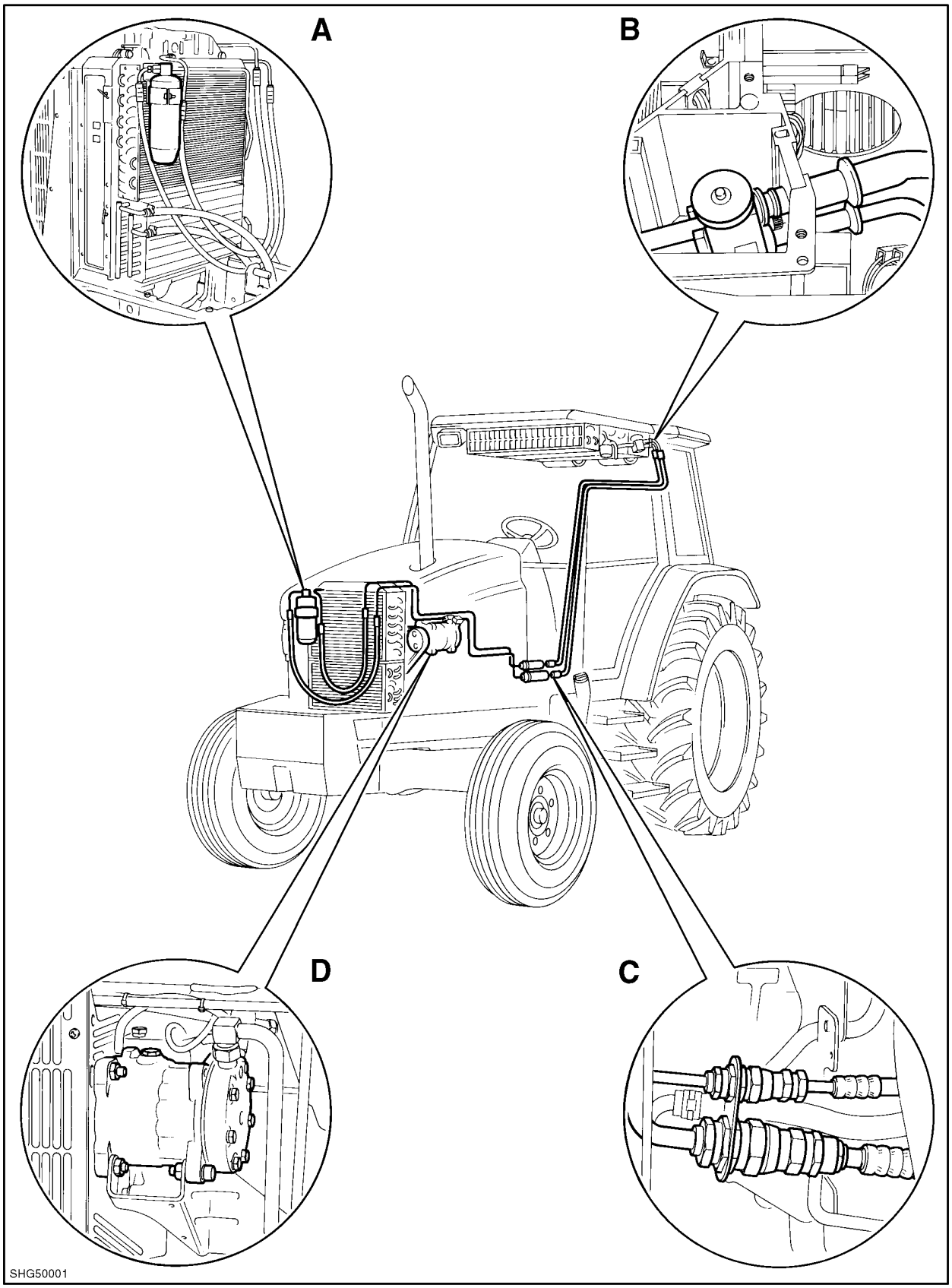

Air Conditioning Component Layout

A. Blower Motor, Expansion Valve and Evaporator
B. Quick Release Self Sealing Couplings
C. Compressor
D. Condenser and Receiver Dryer

7

SYSTEM COMPONENTS - DESCRIPTION AND OPERATION

Refrigerant

To achieve the absorption and the release of heat which is, in essence, the function of an air conditioning system, requires the use of a suitable “refrigerant” - a liquid that has a relatively low temperature boiling point, plus certain desirable safety and stability features.

The refrigerant used in the air conditioning system is refrigerant R-134a.

NOTE: *To help protect the environment legislation has been introduced in most territories banning the release into the atmosphere of refrigerants,including R134a. All service procedures contained in this manual can be carried out without the need to release refrigerant into the atmosphere.*

In order to prevent the incorrect type of refrigerant being charged to the system the service valves fitted to the tractor and necessary to connect up refrigerant recovery, evacuation and recycling/recharging equipment will be of two different sizes as recognised and specified by the air conditioning industry.

⚠ WARNING ⚠

*R-134a refrigerant is **not compatible** with R-12 refrigerant. **Do not** attempt to replace R134a refrigerant with R-12 refrigerant or test the system using gauges or equipment previously used with R12 as damage to the system will result.*

R-134a refrigerant is stable at all operating temperatures and able to absorb great quantities of heat.

The boiling point of R-134a is -22° C (-15° F) at atmospheric pressure.

If the pressure is increased, R-134a will readily vaporize to absorb heat at temperatures between -11.7° C (11° F) at 1.9 bar (27.5 lbf/in^2) and 0°C (32° F) at 42 lbf/in^2 (2.9 bar) in the evaporator.

At higher pressures, R-134a will condense and give off heat at temperatures between 48° C (118° F) at 12.4 bar (180 lbf/in^2) and 58° C (136° F) at 15.85 bar (230 lbf/in^2) in the condenser.

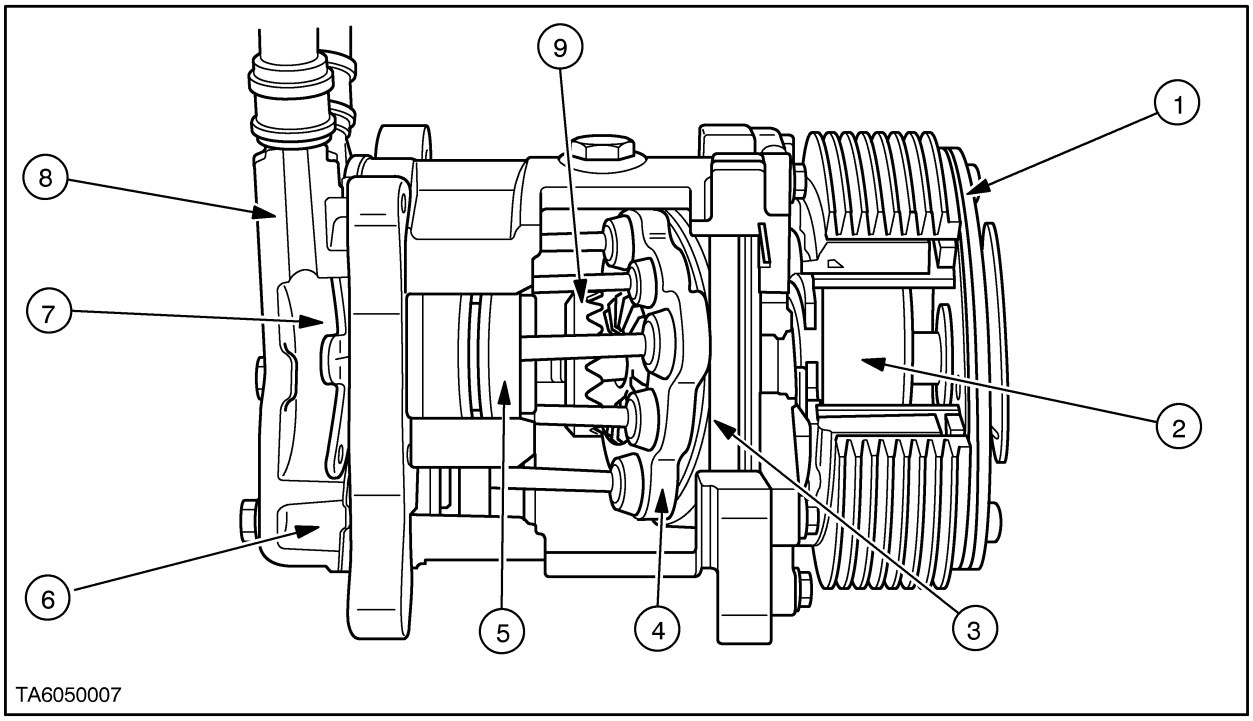

Air Conditioning Refrigerant Compressor 8

1. Electro-magnetic Clutch
2. Clutch Bearing
3. Cam Rotor
4. Wobble Plate
5. Piston
6. Suction Chamber
7. Discharge Chamber
8. Cylinder Head
9. Static Gear

Compressor Pump

The tractor air conditioning unit compressor pump is mounted on the left hand side of the engine and is belt driven by the crankshaft pulley, Figure 7.

The compressor separates the low and high pressure sides of the system and is basically a pump which has two functions:

(1) To raise the refrigerant temperature by compression to a higher degree of temperature than the ambient (outside air) temperature.

(2) To circulate the required volume of refrigerant through the system.

The refrigerant compressor is a seven cylinder wobble plate unit housed in a die cast aluminium housing.

Drive to the wobble plate is from the pulley, through the electro magnetic clutch to the main driveshaft. Attached to the driveshaft is a cam rotor which oscillates the wobble plate. The wobble plate is prevented from rotating by a static gear engaging with teeth formed in the face of the plate. The seven pistons are connected to the wobble plate by rods located in ball sockets.

Refrigerant is drawn in on the downward stroke of a piston through the reed valves located either end of the cylinder assembly. Refrigerant enters the cylinder assembly through a gallery in the outer circumference of the cylinder assembly.

The upwards stroke of the piston compresses the refrigerant and expels it through another reed valve into an inner gallery in the cylinder assembly and out into the refrigerant circuit.

The compressor is lubricated with a Polyalklene Glycol (PAG) oil. This oil is totally miscible with the refrigerant and is carried around the refrigerant circuit.

The compressor is activated by an electro-magnetic clutch which functions to engage or disengage the compressor as required in the operation of the air conditioning system.

The clutch is primarily activated by the:-

- Temperature cycling control switch
- Combined high/low pressure cut-out switch
- Low pressure cut-out switch

Air Conditioner Temperature Cycling Control Switch

The air conditioner temperature cycling control switch is mounted on the left hand side of the evaporator housing and close to the expansion valve, Figure 9.

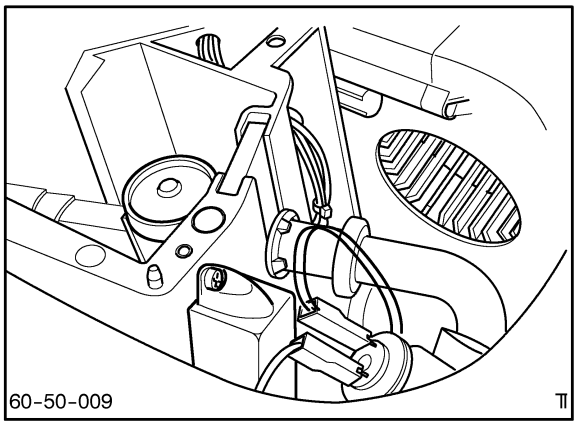

9

The switch is a device which turns the compressor clutch on and off to maintain a constant average evaporator temperature and senses the evaporator temperature using a thermistor positioned within the evaporator fins, Figure 10.

The temperature cycling control switch compares the voltage of the thermistor, which is dependent on the temperature of the evaporator, with the voltage across the potentiometer of the 'in cab' temperature control switch.

The switch upon comparing the two voltages determines whether the compressor clutch should be switched 'on' or 'off' in order to maintain the desired in cab temperature control.

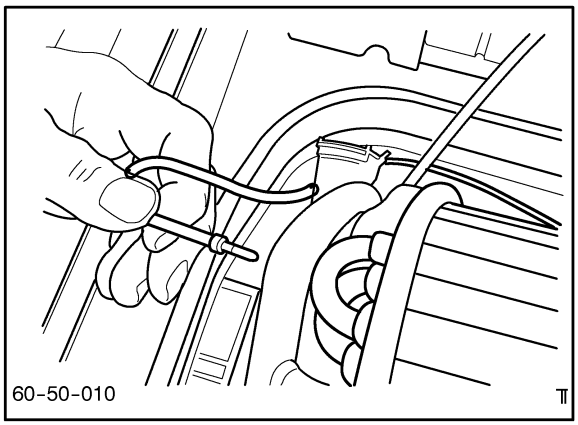

10

Low Pressure Cut-out Switch

The low pressure switch, Figure 11, is in the evaporator outlet line and located in the cab roof next to the evaporator and temperature cycling control switch.

The purpose of the switch is to shut off the compressor pump in the event of low pressure in the refrigerant system.

Low refrigerant pressure may occur due to a faulty expansion valve, icing up of the expansion valve orifice or refrigerant loss. Low refrigerant pressure may result in damage to the compressor pump.

The low pressure switch is factory set and cannot be adjusted.

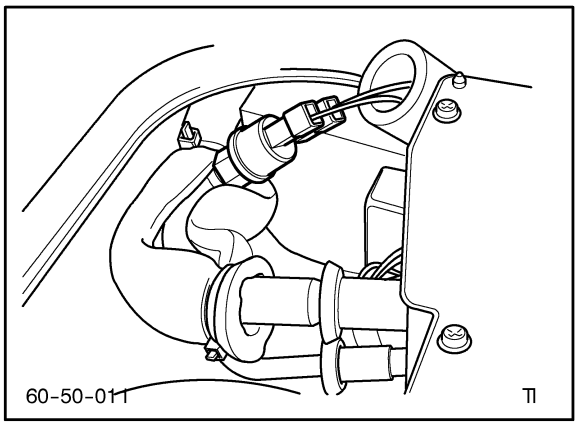

11

Combined High/Low Pressure Cut-out Switch

The combined high/low pressure switch, (1) Figure 12, is located in the condenser inlet line from the compressor. The switch shuts off the compressor pump in the event of a restriction in the high pressure line or excessively low pressure due to lack of refrigerant in the system.

Loss of refrigerant in the system will result in insufficient cooling and lubrication and continuous operation will cause damage to the compressor pump.

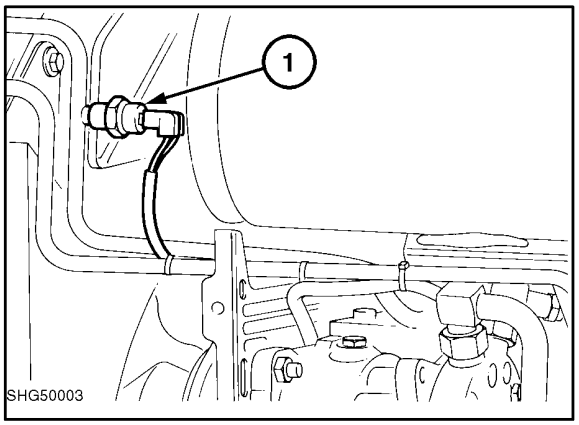

12

System Pressure Relief Valve

A relief valve is located at the discharge port on the compressor, (1) Figure 13. This allows the system refrigerant to be discharged into the engine bay (atmosphere) instead of in the cab, if the system pressure became such that a hose might fail in the cab and cause injury to the operator. This secondary safety feature will only operate in extreme conditions, for example, if the high pressure cut out switch were to fail, or in the event of an engine fire.

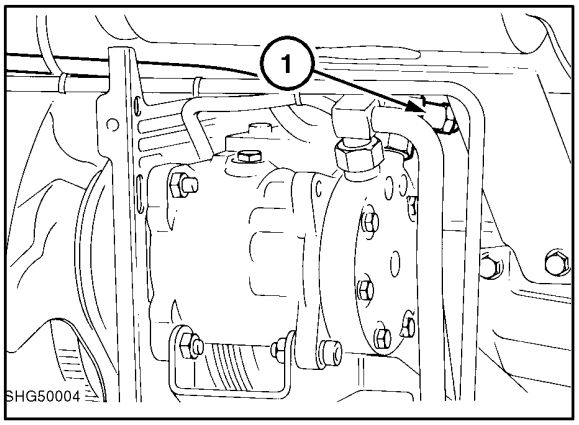

13

Condenser And Receiver Dryer

The condenser, (1) located at the front of the tractor, Figure 14, consists of a number of turns of continuous coil mounted in a series of thin cooling fins to provide a maximum of heat transfer in a minimum amount of space.

The condenser receives the hot, high pressure refrigerant vapour from the compressor. The hot vapour passes through the condenser coils and outside air is pushed through the condenser by the engine cooling fan.

Heat moves from the hot refrigerant vapour into the cooler outside air flowing across the condenser coils and fins.

When the refrigerant vapour reaches the pressure and temperature that will induce a change of state, a large quantity of heat is transferred to the outside air and the refrigerant changes to a high pressure warm liquid.

The warm liquid refrigerant continues onto the receiver/drier where it is filtered and desiccated, to remove any moisture, before passing through an outlet line to the thermostatic expansion valve.

The receiver/dryer(2) stores the liquid refrigerant to be sure a steady flow to the thermostatic expansion valve is maintained under widely different operating conditions.

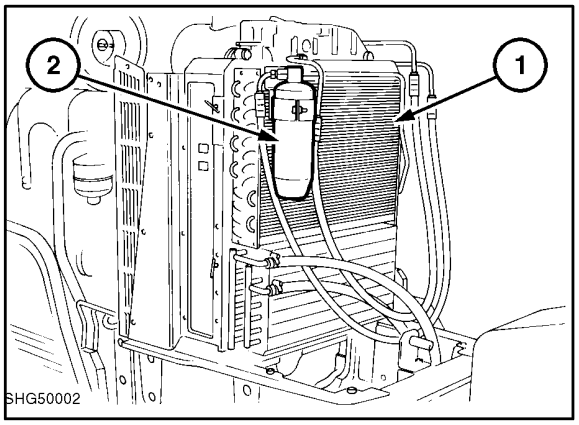

14

The drier section contains a desiccant (Molecular sieve) to absorb any moisture within the system and a filter prevents the entry of foreign particles.

NOTE: *Any moisture in the air conditioning system is extremely harmful. Moisture not absorbed by the dehydrator will circulate with the refrigerant and droplets may collect and freeze in the thermostatic expansion valve orifice. This action will block the refrigerant flow and stop the cooling action. Moisture will also react with refrigerant R-134a and the lubricant to form a corrosive acid.*

The desiccant can only absorb a limited amount of moisture before reaching saturation point. Because of this, after any system component replacement or repairs requiring entry into the system, the receiver/dryer should be replaced.

Expansion Valve

The expansion valve, Figure 15, is located next to the evaporator, in the pressure line leading from the receiver/dryer and performs the following functions:

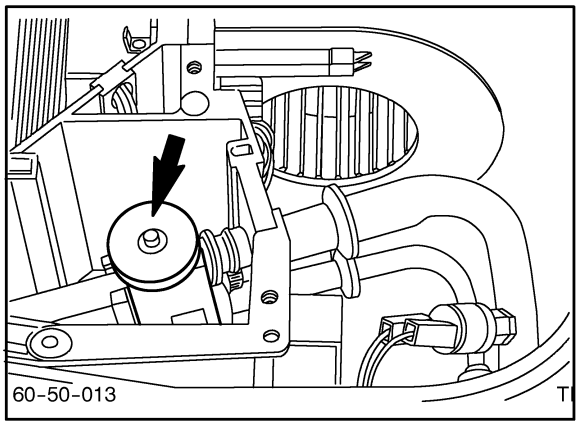

15

1. METERING ACTION -
   A metered orifice changes the liquid refrigerant from a high pressure low temperature liquid to a low pressure, lower temperature atomized liquid.

2. MODULATING ACTION -
   A thermostatically controlled valve within the expansion valve body controls the volume of liquid refrigerant passing through the orifice and makes sure the refrigerant is fully vaporized within the evaporator. Liquid refrigerant would damage the compressor reed valves or freeze the pistons.

3. CONTROLLING ACTION -
   The valve responds to changes in the cooling requirements. When increased cooling is required, the valve opens to increase the refrigerant flow and when less cooling is required the valve closes and decreases the refrigerant flow.

Expansion Valve - Operation

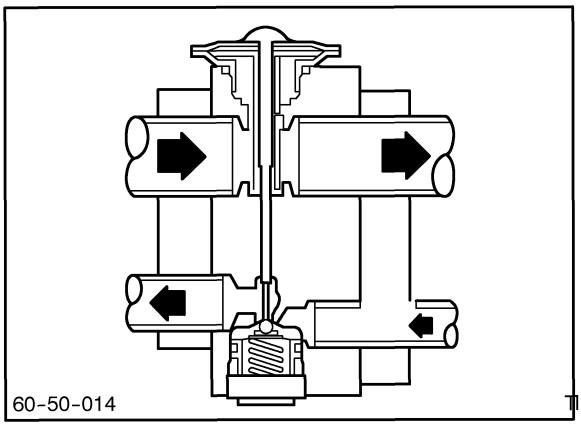

16

All of the needed temperature sensing and pressure sensing functions are consolidated into this basic unit and no external tubes are required for these purposes.

The refrigerant from the condenser and receiver dryer enters the thermostatic expansion valve as a high pressure warm liquid. Upon passing through the ball and spring controlled metering orifice, the pressure and temperature of the refrigerant is reduced and the refrigerant leaves the thermostatic expansion valve as a low pressure, lower temperature atomized liquid.

The atomized liquid now passes through the evaporator where it absorbs heat before returning via the expansion valve to the compressor as a warm Low pressure vapour.

There are two refrigerant passages in the valve. One passage is in the refrigerant line from the condenser to the evaporator and contains the ball and spring type orifice valve. The other passage is in the refrigerant line from the evaporator to the compressor and contains the valve's temperature sensing element.

Liquid refrigerant flow from the condenser and receiver dryer is controlled by a push-rod forcing the orifice valve ball off its seat and the spring exerting pressure on the ball to keep it on its seat.

During stabilized (vehicle shutdown) conditions, the pressure on the bottom of the expansion valve diaphragm rises above the pressure on the top of the diaphragm allowing the valve spring to close the orifice.

When the system is started, the pressure on the bottom of the diaphragm drops rapidly, allowing the orifice to open and meter atomized liquid refrigerant to the evaporator where it begins to vaporize.

Suction from the compressor draws the vaporized refrigerant out of the evaporator and back through a gallery in the top of the valve which passes the temperature sensor.

The temperature sensor reacts to variations in refrigerant gas pressure returning from the evaporator. When heat from the passenger compartment is absorbed by the refrigerant the pressure of the gas increases causing a differential pressure above and below the temperature sensor diaphragm. The diaphragm reacts to this pressure differential and a push rod forces the ball in the expansion valve orifice further off its seat. This reaction allows an increase in the atomized refrigerant to flow through the valve, to the evaporator, so that more heat can be absorbed by the air conditioning system.

Similarly when the temperature of the gas returning from the evaporator decreases the pressure of the gas decreases. This causes the diaphragm to react accordingly and allow the ball in the orifice to move closer towards its seat thus reducing the flow of refrigerant through the valve to the evaporator.

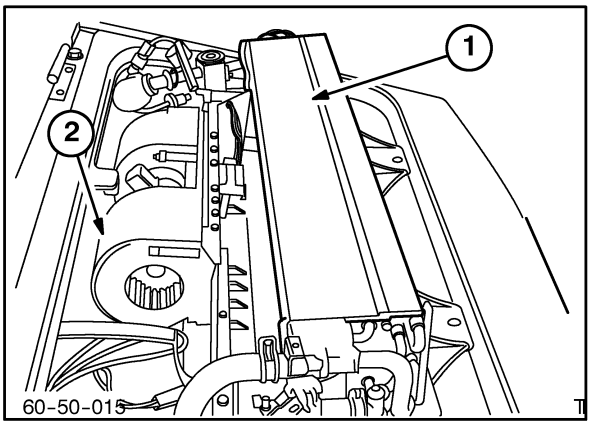

17

Evaporator

The evaporator, Figure 17, is located in the cab roof and consists of a number of turns of continuous coils mounted in a series of thin cooling fins to provide a maximum of heat transfer in a minimum amount of space.

Low temperature refrigerant in the evaporator absorbs heat from the hotter air in the operator's compartment, thereby cooling the air.

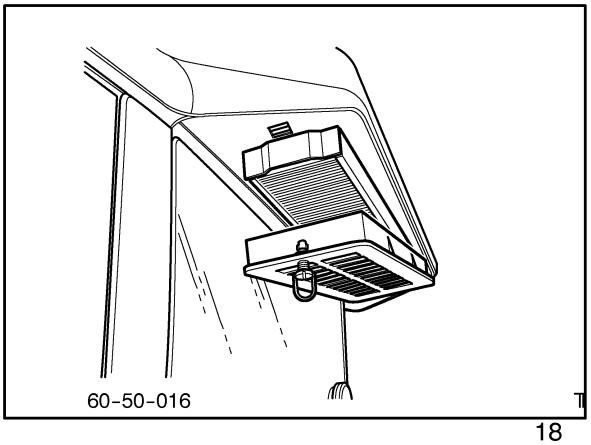

18

Blower Fan

The blower fan, (2) Figure 17, draws warm air from outside the cab through the intake filters, Figure 18 and forces it across the evaporator before entering the cab through louvered vents.

The blower motor is controlled by a three-speed switch, figure 19. The switch uses a variable resistor to change the fan speed.

High blower speed provides the greatest volume of circulated air, however, a slower speed will allow the air to contact the cooling fins and coils of the evaporator for a longer period resulting in the warm air giving up more heat to the cooler refrigerant.Therefore, the coldest air temperature is obtained when the blower fan is operated at the lowest speed.

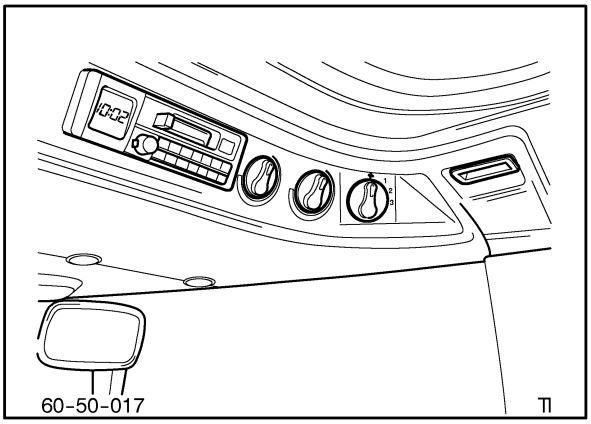

19

FAULT FINDING AND TESTING THE AIR CONDITIONING SYSTEM

General

Overhaul of the air conditioning system should only be undertaken by a certified specialist refrigeration engineer using a comprehensive air conditioning test kit, including a gas leak detector, suitable for R134a refrigerant gas.

⚠ WARNING ⚠

Before dismantling an air conditioning system for repair the gas within the system must be discharged and recovered using a ***certified recovery unit*** *designed for the type of refrigerant gas used in the system.*

NEVER release refrigerant gas into the atmosphere.

ALWAYS wear safety goggles and gloves when servicing any part of the air conditioning system.

To prevent the entry of any foreign material, observe the following points:

- Ensure all tools, gauges, hoses and replacement parts are kept clean and dry and are suitable for the type of refrigerant gas used in the system.
- Clean all hoses and fittings before disconnecting. Cap or plug all openings when disconnected.
- When adding lubricating oil to the system always uncap and re-cap the oil container immediately before and after use. Always ensure the oil remains free of moisture.

Preliminary Fault Finding

Always conduct the preliminary fault finding checks before performance testing the system.

1. Run the engine at 1000-1200 rev/min for 10 minutes with the air conditioner set at maximum cooling and the blower on high speed.
2. Check that the heater temperature control is switched OFF.
3. Close the heater shut–off valve on the rear of the inlet manifold.
4. Check that the blower fan is operating at all speeds.
5. Check that the compressor clutch engages when the temperature control switch is turned from “OFF” to “ON” position. A clicking sound indicates the clutch is engaging. If the clutch fails to operate it may indicate an electrical problem in the high low pressure cut out switches or malfunction of the electric drive clutch on the compressor.
6. Check the engine cooling fan is drawing cool air through the condenser
7. Check the compressor drive belt tension.
8. Check the condenser core and grid is clean and free of obstruction.
9. Check the cab air filters are clean and free of obstruction.
10. Check the evaporator fins are not plugged or excessively dirty.

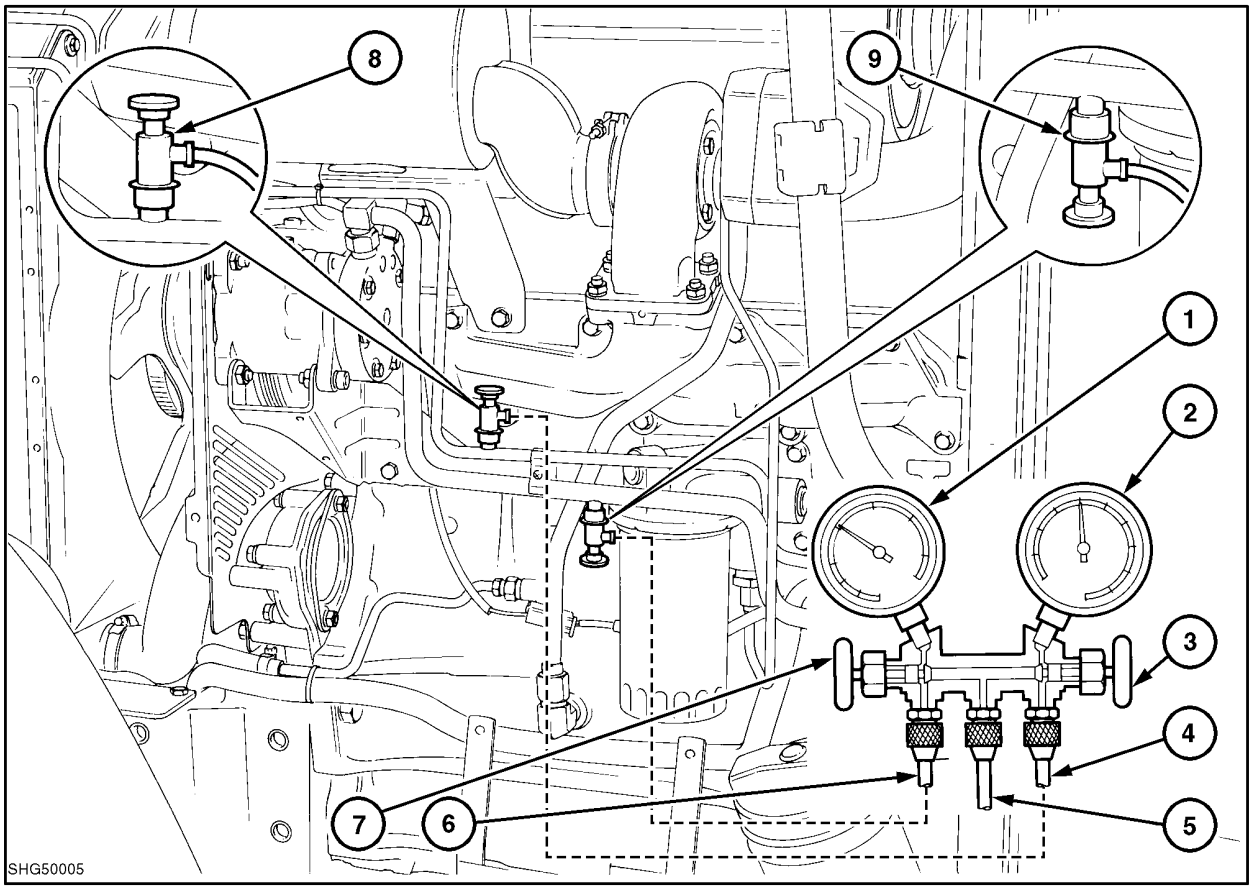

Attaching Manifold Gauge Set to the Tractor 20

1. Low Side Gauge
2. High Side Gauge
3. Shut-off Valve
4. Test Hose to High Side Service Connector
5. Center Hose (Not Used)
6. Test Hose to Low Side Service Connector
7. Shut-off Valve
8. Low Pressure Side Service Valve
9. High Pressure Side Service Valve

Performance Testing The Air Conditioning System

The manifold gauge set is the most important tool used in testing and servicing the air conditioning system.

It should be noted however that for those dealers who posses the latest design level of refrigerant recovery, recycling and recharging station these gauges are an integral part of the machine.

The following instructions for performance testing the air conditioning system is based on the use of the gauge set shown in Figure 20. The principal of operation is however similar when testing the system using a recovery and recharging station with integral gauges.

When using this type of equipment **always** consult the manufacturers operating instructions.

Operating Precautions

IMPORTANT: Always ensure the shut–off valves are **closed** (turn clockwise until seated) during all test operations.

In the closed position, refrigerant circulates around the valve stems to the gauges. Therefore, when the manifold gauge set is connected into a system, pressure is registered on both gauges.

- **NEVER** open the HIGH SIDE shut off valve when the system is operating.
- **ALWAYS** open the LOW SIDE shutoff valve when adding refrigerant.

Attaching The Gauge Set To The Tractor

⚠ WARNING ⚠

To avoid personal injury, stop the tractor engine during connection of the manifold gauge set.

1. Check that the gauge set shut off valves are closed (turned fully clockwise).

2. Connect the high side gauge hose (normally red) to the high pressure side service valve and the low side gauge hose (normally blue) to the low pressure side service valve on the tractor, Figure 20. Ensure the hose connections are fully tightened.

IMPORTANT: *Prior to connection of the manifold gauge set, identify the suction (low pressure) and discharge (high pressure) service gauge ports. The high pressure service valve is always in the line from the compressor to the condenser.*

The high and low pressure service valves on the tractor are spring loaded valve and will be automatically opened when the test hose is connected.

NOTE: *The test hose must incorporate a valve depressor to actuate this type of valve.*

The service valves have a protective cap. This cap must be removed for test gauge connections and replaced when service operations are completed.

Test Procedure

After the manifold gauge set has been connected and before pressure tests can be made, the system must be stabilized as follows:

1. Re-check that both the high and low side shut off valves on the manifold gauge set are fully **closed.**
2. Apply the parking brake, check the gear shift levers are in neutral and close the cab windows and doors.
3. Run the engine at 1000-1200 rev/min.
3. Turn the heater temperature control 'off'
4. Operate the system at maximum cooling, with the blower fan at high speed for 10 minutes to stabilize all components.
5. Check the manifold low pressure gauge reading is within the specified range of approximately 4-36 lbf/in^2 (0.28-2.48 bar) (0.28-2.53 kgf/cm^2).
6. Check the manifold high pressure gauge reading and compare the reading to the pressure indicated on the pressure temperature chart below.
7. Measure and compare the temperature of conditioned air entering the cab through the louvered air vents with the ambient air at the air intake filters on the outside of the cab.

   If the system is operating correctly the conditioned air entering the cab should be 6–9° C (10–15° F) cooler than the ambient temperature of the outside air.
8. If it is confirmed that the system is not operating correctly refer to the fault diagnostic charts and performance test gauge reading examples on the following pages for possible corrective action.

⚠ WARNING ⚠

A significant amount of refrigerant vapour may have condensed to a liquid at the service fitting at the high side of the compressor. Use a cloth or other protective material when disconnecting the manifold hose from this fitting to prevent personal injury to hands and face.

APPROXIMATE HIGH PRESSURE GAUGE READINGS

Ambient Air Temperature		High Pressure Gauge Reading		
Degrees F	Degrees C	bar	kgf/cm^2	lbf/in^2
80	27	10.0/11.6	10.3/11.8	147/168
85	29	11.2/12.7	11.4/12.9	162/184
90	32	12.3/13.8	12.5/14.0	179/200
95	35	13.3/15.2	13.6/15.5	194/221
100	38	14.5/16.7	14.8/17.0	210/242
105	41	16.0/18.3	16.3/18.6	231/265
110	43	17.3/20.0	17.7/20.3	252/289

PERFORMANCE TEST DIAGNOSIS

Gauge Readings:- Low Pressure - Low
High Pressure - Low

PROBLEM	POSSIBLE CAUSES	CORRECTION
Evaporator air not cold (Refer to Example 1)	Low refrigerant charge.	Perform leak tests and repair Evacuate system Charge system, re-test system
Evaporator air warm	Extremely low refrigerant charge.	Perform leak tests and repair Evacuate system Charge system, re-test system
Evaporator air cool but not sufficiently cold . Low pressure switch cutting out Expansion valve to evaporator tube shows considerable condensation or frost. Too cold to touch	Expansion valve not permitting sufficient flow. Stuck valve	Check expansion valve as follows: Set a max. cooling Low pressure gauge should drop slowly If expansion valve is defective: Discharge system Replace expansion valve Evacuate system Charge system Re-test

PERFORMANCE TEST DIAGNOSIS CHART

Gauge Readings:– Low Pressure - High
High Pressure - High

PROBLEM	POSSIBLE CAUSES	CORRECTION
Evaporator air warm Liquid line hot (condenser outlet to expansion valve tube) High pressure switch cutting out	Improper operation of condenser Overcharged with refrigerant Air in system	Inspect for dirty condenser restricting air flow and cooling Check operation of condenser cooling fans. Repair or replace as needed. Check for overcharge as follows: Stop the engine. Recover and recycle the charge using correct recovery equipment. Recharge the the system with the correct quantity of refrigerant, replacing any lost lubricant. Recheck performance of air conditioning system.
Evaporator air not cold	Expansion valve allowing too much refrigerant to flow through the evaporator	Check expansion valve as follows: Set for Maximum cooling. Low pressure gauge should drop slowly If expansion valve is defective: Discharge System Replace Expansion Valve Evacuate System Charge System Re–test

PERFORMANCE TEST DIAGNOSIS CHART

Gauge Readings:- Low Pressure - Low
High Pressure - High

PROBLEM	POSSIBLE CAUSES	CORRECTION
Insufficient cooling	Restriction in liquid line	Discharge the system Replace the receiver/drier Inspect all lines and tubing from compressor outlet to expansion valve. Replace if needed. Evacuate the system Charge the system Re-test

PERFORMANCE TEST DIAGNOSIS CHART

Gauge Readings:- Low Pressure - High
High Pressure - Low

PROBLEM	POSSIBLE CAUSES	CORRECTION
Evaporator air not cold	Internal leak in compressor. (reed valves, gasket, worn or scored piston rings or cylinder)	Discharge the system Replace the compressor Evacuate the system Charge the system Re-test

PERFORMANCE TEST DIAGNOSIS CHART

Gauge Readings:- Low Pressure - Normal
High Pressure - Normal

PROBLEM	POSSIBLE CAUSES	CORRECTION
Insufficient cooling Low pressure reading does not fluctuate with changes in temperature control switch (pressure should drop until compressor cycles) Evaporator air not cold.	System low on charge Air or moisture present in system	Perform leak test Discharge system Repair leaks Replace receiver/drier Check oil level Evacuate system Charge the system Re-test

PERFORMANCE TEST DIAGNOSIS CHART

Gauge Readings:- Low Pressure - High
High Pressure - Normal

PROBLEM	POSSIBLE CAUSES	CORRECTION
Compressor cycles “on” and “off” too frequently	Defective temperature control (thermostatic) switch	Stop engine and shut off A/C Replace temperature control switch Re-test system and check compressor cycling

EXAMPLES OF MANIFOLD GAUGE READINGS AND INTERPRETATIONS

The following examples show typical low and high pressure gauge readings obtained when performance testing the air conditioning system with an ambient temperature of 35° C (95° F).

The recommended corrective action is based on a similar fault as identified in the performance test diagnosis charts.

PERFORMANCE TEST EXAMPLE 1

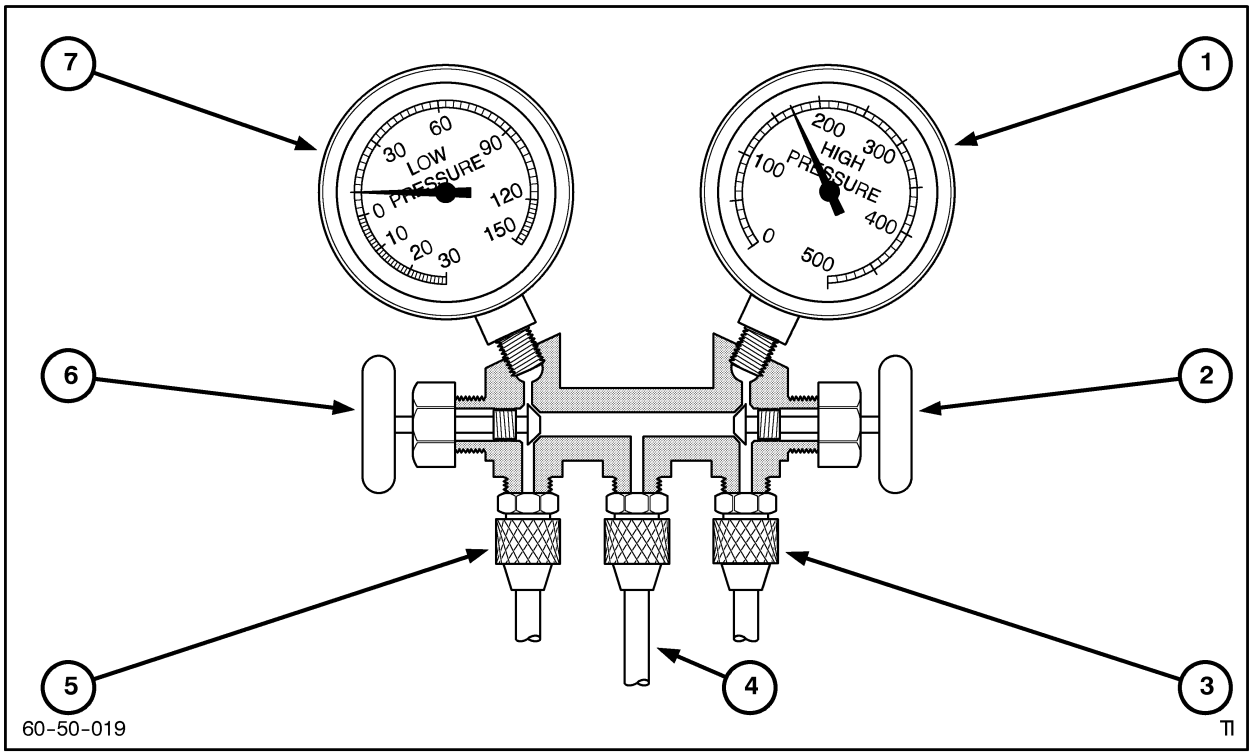

Performance Test Example 1

21

1. High Side Low
2. High Side Hand Valve Closed
3. High Side Hose Connected to High Side Service Connector
4. Not Used
5. Low Side Hose Connected to Low Side Service Connector
6. Low Side Hand Valve Closed
7. Low Side Low

PROBLEM:

Little or no cooling.

CAUSE:

Refrigerant slightly low.

CONDITIONS*

Low side pressure too low.
Gauge should read 1–2 bar (15-30 lbf/in^2).

High side pressure too low.
Gauge should read 13.3–14.8 bar
(194–215 lbf/in^2).

Evaporator air not cold.

CORRECTIVE PROCEDURES

1. Leak test the system.
2. Repair leaks. (Discharge and recover the refrigerant from the system; replace lines or components).
3. Check compressor oil to ensure no loss.
4. Evacuate the system.
5. Charge the system.
6. Performance test the system.

DIAGNOSIS: *System refrigerant is low. May be caused by a small leak.*

***NOTE:** *Test procedure based upon ambient temperature of 35°C (95° F). For proper high side gauge reading for other ambient temperatures, refer to the pressure temperature chart.*

PERFORMANCE TEST EXAMPLE 2

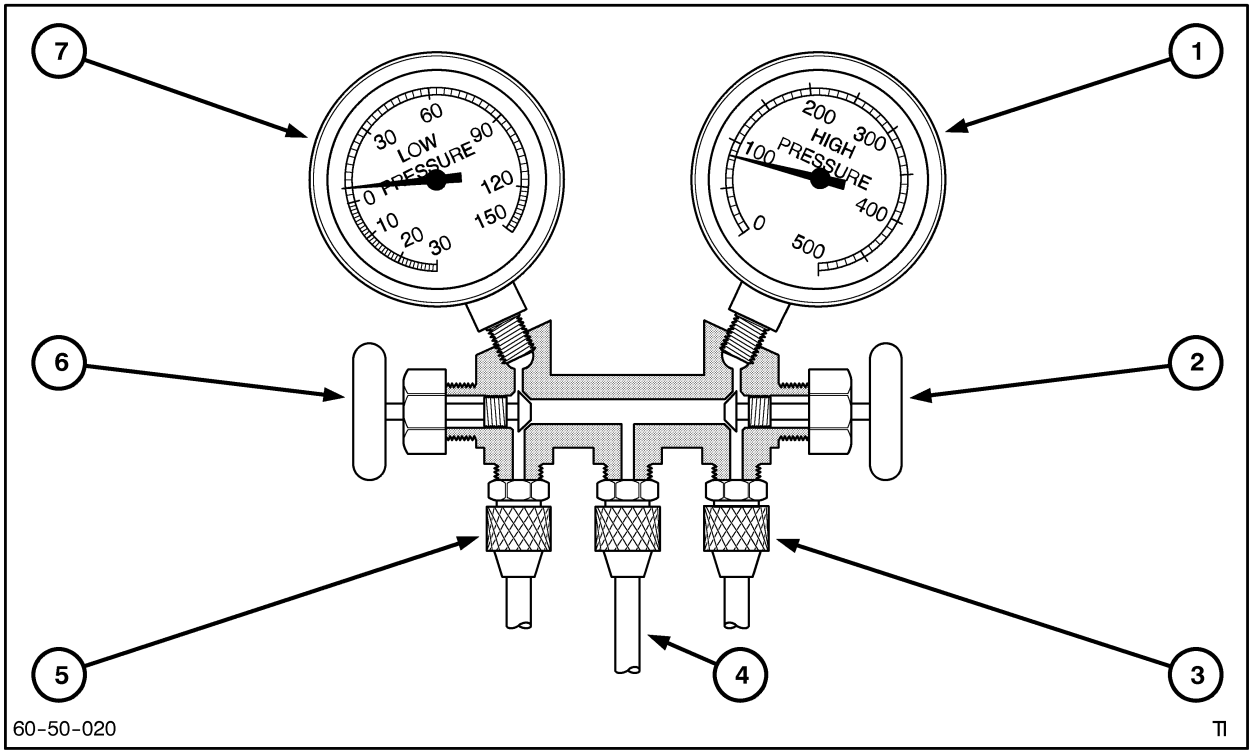

Performance Test Example 2 22

1. High Side Low
2. High Side Hand Valve Closed
3. High Side Hose Connected to High Side Service Connector
4. Not Used
5. Low Side Hose Connected to Low Side Service Connector
6. Low Side Hand Valve Closed
7. Low Side Low

PROBLEM:

Insufficient cooling.

CAUSE:

Refrigerant excessively low.

CONDITIONS*

Low side pressure very low.
Gauge should read 1–2 bar (15-30 lbf/in^2)

High side pressure too low.
Gauge should read 13.3–14.8 bar
(194–215 lbf/in^2).

Evaporator air warm.

Low pressure switch cutting out

CORRECTIVE PROCEDURES

1. Leak test the system.
2. Discharge and recover the refrigerant from the system.
3. Repair leaks.
4. Check compressor oil to ensure no loss.
5. Evacuate the system.
6. Charge the system.
7. Performance test the system.

DIAGNOSIS: *System refrigerant is extremely low. A serious leak is indicated.*

***NOTE:** *Test procedure based upon ambient temperature of 95° F. For proper high side gauge reading for other ambient temperatures, refer to the pressure temperature chart.*

PERFORMANCE TEST EXAMPLE 3

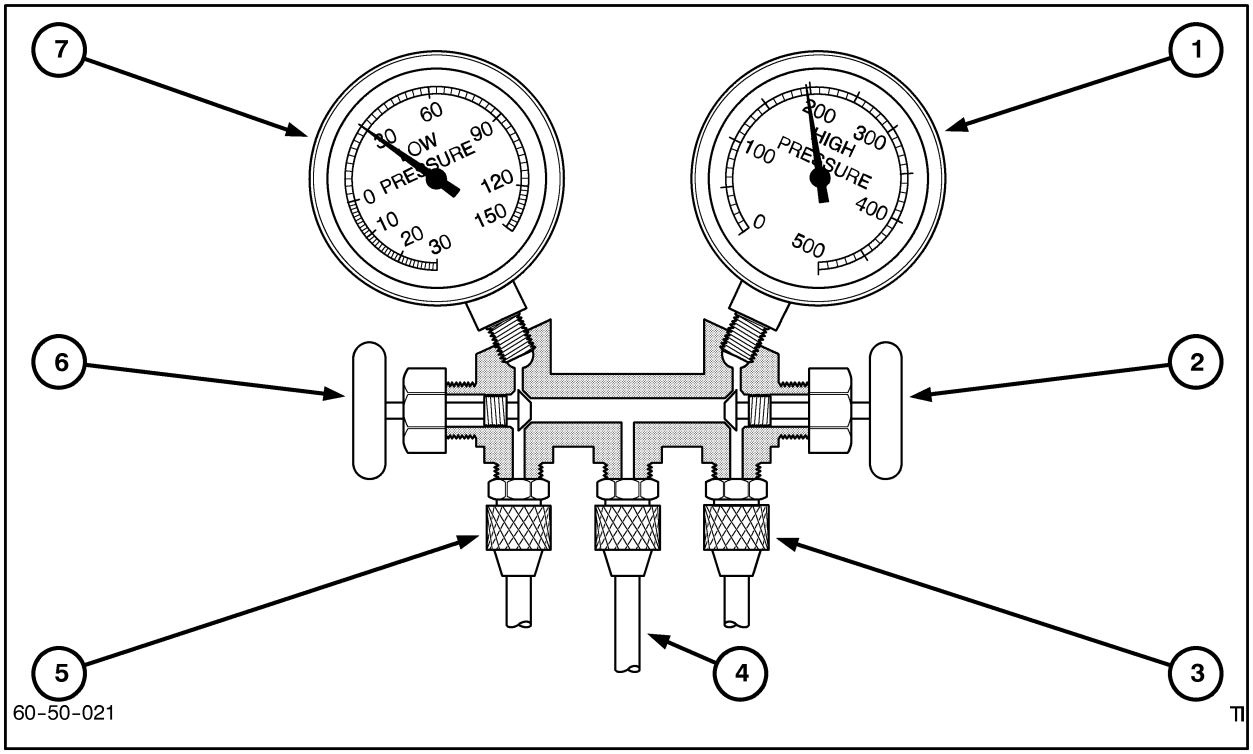

Performance Test Example 3

23

1. High Side Normal
2. High Side Hand Valve Closed
3. High Side Hose Connected to High Side Service Connector
4. Not Used
5. Low Side Hose Connected to Low Side Service Connector
6. Low Side Hand Valve Closed
7. Low Side Low

PROBLEM:

Insufficient cooling.

CAUSE:

Air in system.

CONDITIONS*

Low side pressure reading does not change when compressor cycles “on” and “off”.

High side pressure slightly high or slightly low. Gauge should read 13.3–14.8 bar (194–215 lbf/in^2).

Evaporator air not cold.

CORRECTIVE PROCEDURES

1. Leak test the system. Give special attention to the compressor seal area.
2. Discharge and recover the refrigerant from the system.
3. Repair leaks.
4. Replace the receiver/dryer.
5. Check compressor oil to ensure no loss.
6. Evacuate the system.
7. Charge the system.
8. Performance test the system.

DIAGNOSIS: *Air or moisture in system. System not fully charged.*

***NOTE:** Test procedure based upon ambient temperature of 35°C (95° F). For proper high side gauge reading for other ambient temperatures, refer to the pressure temperature chart.*

PERFORMANCE TEST EXAMPLE 4

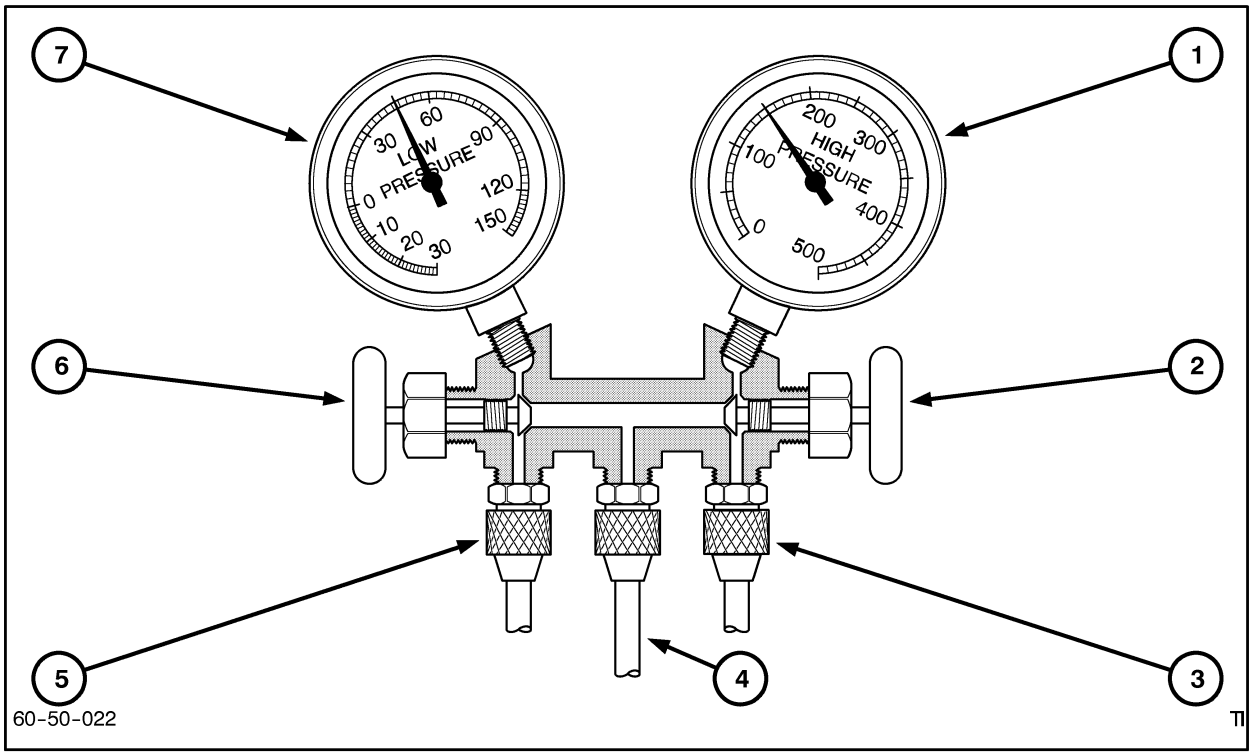

Performance Test Example 4

24

1. High Side Low
2. High Side Hand Valve Closed
3. High Side Hose Connected to High Side Service Connector
4. Not Used
5. Low Side Hose Connected to Low Side Service Connector
6. Low Side Hand Valve Closed
7. Low Side High

PROBLEM:

Insufficient cooling.

CAUSE:

Compressor malfunction.

CONDITIONS*

Low side pressure too high. Gauge should read 1–2 bar (15-30 lbf/in^2).

High side pressure too low. Gauge should read 13.3–14.8 bar (194–215 lbf/in^2).

Evaporator air not cold.

CORRECTIVE PROCEDURES

1. Replace the compressor.

DIAGNOSIS: *Internal leak in compressor caused by worn or scored pistons, rings, or cylinders.*

***NOTE:** Test procedure based upon ambient temperature of 35°C (95° F). For proper high side gauge reading for other ambient temperatures, refer to the pressure temperature chart.*

PERFORMANCE TEST EXAMPLE 5

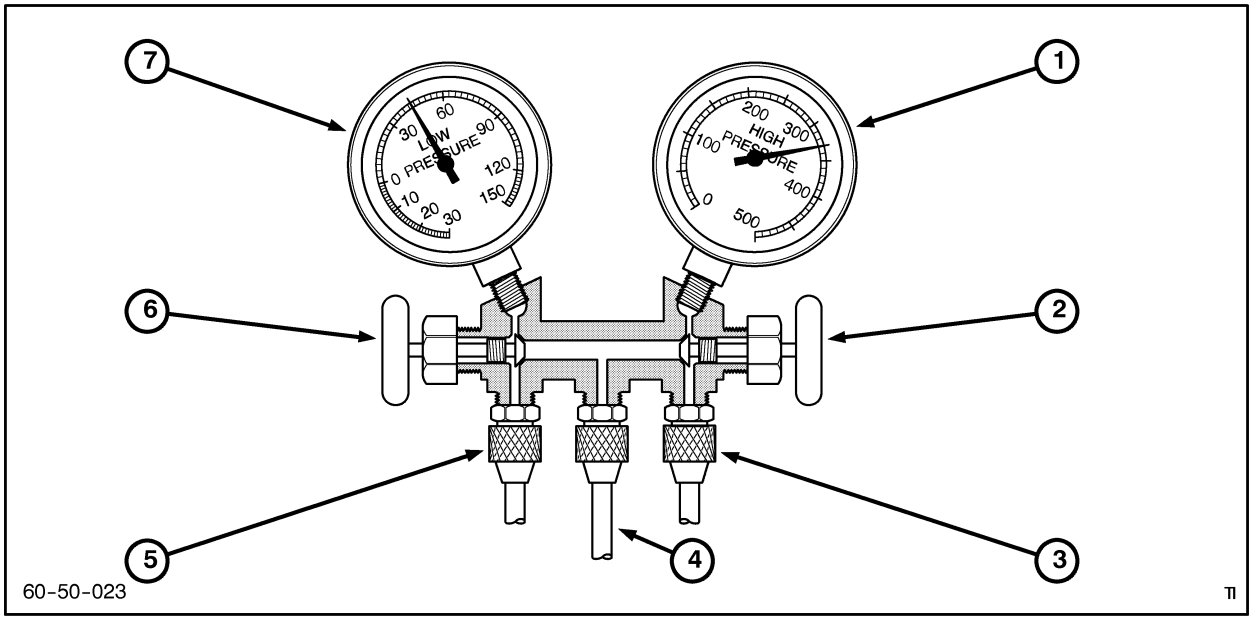

Performance Test Example 5

25

1. High Side High
2. High Side Hand Valve Closed
3. High Side Hose Connected to High Side Service Connector
4. Not Used
5. Low Side Hose Connected to Low Side Service Connector
6. Low Side Hand Valve Closed
7. Low Side High

PROBLEM:

Insufficient or no cooling. Engine overheats in some cases.

CAUSE:

Condenser not functioning properly.

CONDITIONS*

Low side pressure too high. Gauge should read 1-2 bar (15-30 lbf/in^2).

High side pressure too high. Gauge should read 13.3-14.8 bar (194-215 lbf/in^2).

Liquid line hot.

Evaporator air warm.

High pressure switch cutting out.

CORRECTIVE PROCEDURES

1. Check belt. Loose or worn drive belts could cause excessive pressures in the compressor head.
2. Look for clogged passages between the condenser fins and coil, or other obstructions that could reduce condenser airflow.
3. If engine is overheating replace engine thermostat and radiator pressure cap.

At this point, operate the system and check its performance. If still unsatisfactory, proceed as follows:-

4. Discharge and recover the refrigerant from the system.
5. Remove the condenser and clean and flush it to ensure a free flow of refrigerant. Or, if the condenser appears to be unduly dirty or plugged, replace it.
6. Replace the receiver/dryer.
7. Evacuate the system, and recharge it with the correct quantity of refrigerant.
8. Performance test the system.

DIAGNOSIS: *Lack of cooling caused by pressure that is too high on the high side, resulting from improper operation of condenser. (Refrigerant charge may be normal or excessive).*

***NOTE:** *Test procedure based upon ambient temperature of 35°C (95° F). For proper high side gauge reading for other ambient temperatures, refer to the pressure temperature chart.*

PERFORMANCE TEST EXAMPLE 6

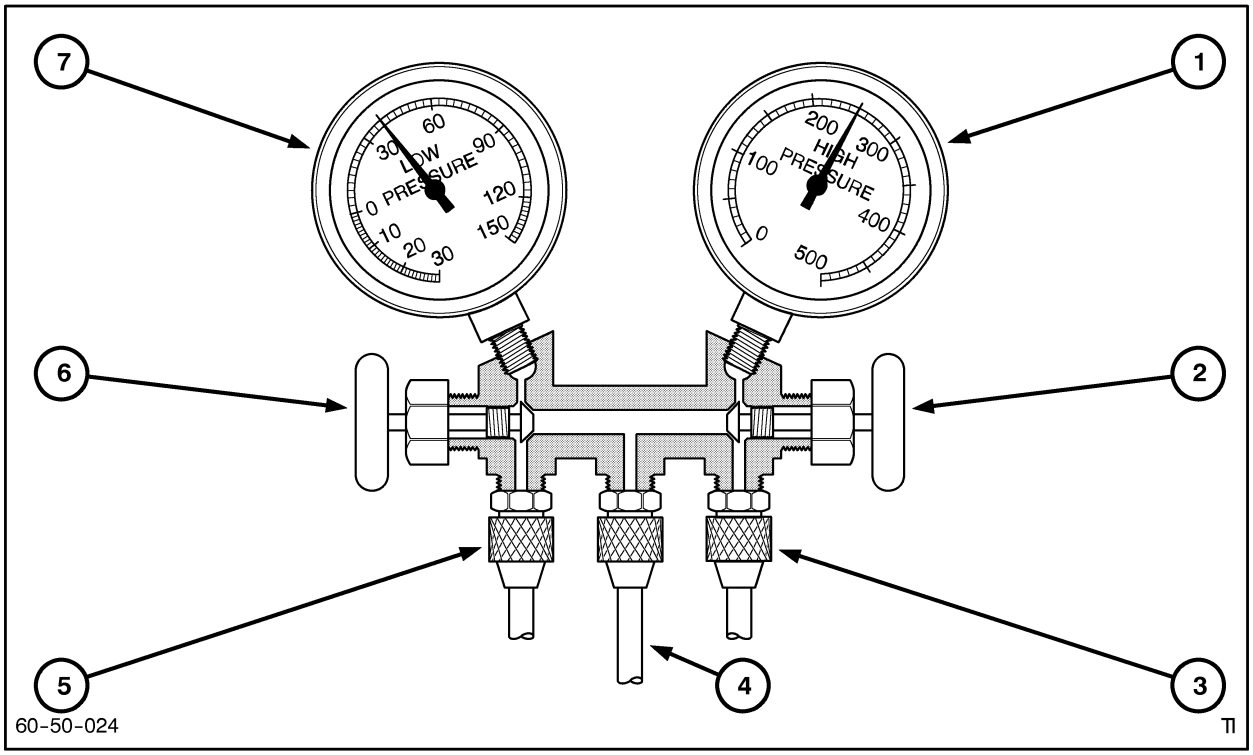

Performance Test Example 6

26

1. High Side Normal
2. High Side Hand Valve Closed
3. High Side Hose Connected to High Side Service Connector
4. Not Used
5. Low Side Hose Connected to Low Side Service Connector
6. Low Side Hand Valve Closed
7. Low Side Normal

PROBLEM:

Insufficient or no cooling.

CAUSE:

Large amount of air in system.

CONDITIONS*

Low side pressure too high. Gauge should read 1–2 bar (15-30 lbf/in^2).

High side pressure too high. Gauge should read 13.3–14.8 bar (194–215 lbf/in^2).

Evaporator air not cool.

CORRECTIVE PROCEDURES

1. Discharge and recover the refrigerant from the system.
2. Replace the receiver/dryer.
3. Evacuate the system.
4. Charge the system.
5. Performance test the system.

DIAGNOSIS: *Air in system. This, and the moisture in the air, is contaminating the refrigerant, causing the system to operate improperly.*

***NOTE:** *Test procedure based upon ambient temperature of 35°C (95° F). For proper high side gauge reading for other ambient temperatures, refer to the pressure temperature chart.*

PERFORMANCE TEST EXAMPLE 7

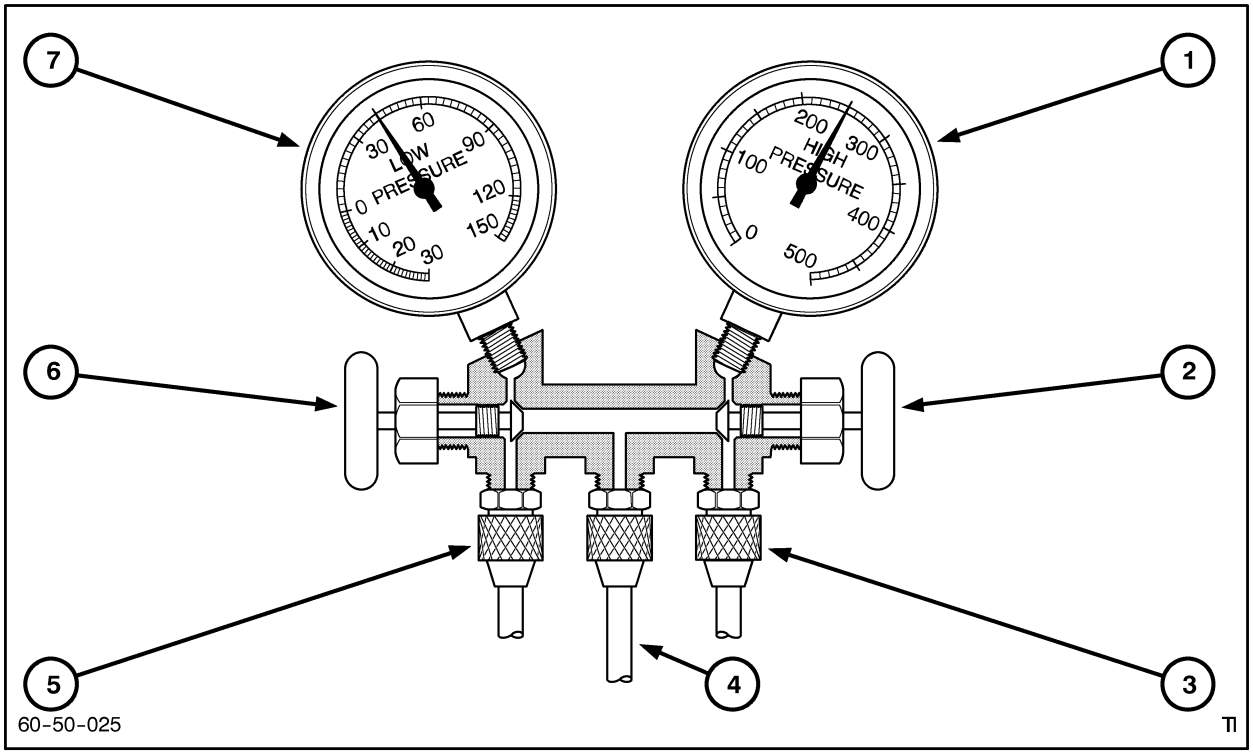

Performance Test Example 7 27

1. High Side High
2. High Side Hand Valve Closed
3. High Side Hose Connected to High Side Service Connector
4. Not Used
5. Low Side Hose Connected to Low Side Service Connector
6. Low Side Hand Valve Closed
7. Low Side Hide

PROBLEM:

Insufficient or no cooling.

CAUSE:

Improper operation of thermostatic expansion valve (stuck open)

CONDITIONS*

Low side pressure too high. gauge should read 1–2 bar (15-30 lbf/in^2).

High side pressure too high. Gauge should read 13.3–14.8 bar (194–215 lbf/in^2).

Evaporator air warm.

Evaporator and suction hose (to compressor) surfaces show considerable moisture.

CORRECTIVE PROCEDURES

1. Check for sticking expansion valve as follows:–

   Operate the system at maximum cooling.

   Check the low side gauge. The pressure should drop slowly.

2. If the test indicates that the expansion valve is defective, proceed as follows:

   Discharge and recover the refrigerant from the system.

   Replace the expansion valve.

   Evacuate the system.

   Charge the system.

   Performance test the system.

DIAGNOSIS: *Thermostatic expansion valve is allowing too much refrigerant to flow through the evaporator coils. Valve may be stuck open.*

***NOTE:** *Test procedure based upon ambient temperature of 35°C (95° F). For proper high side gauge reading for other ambient temperatures, refer to the pressure temperature chart.*

PERFORMANCE TEST EXAMPLE 8

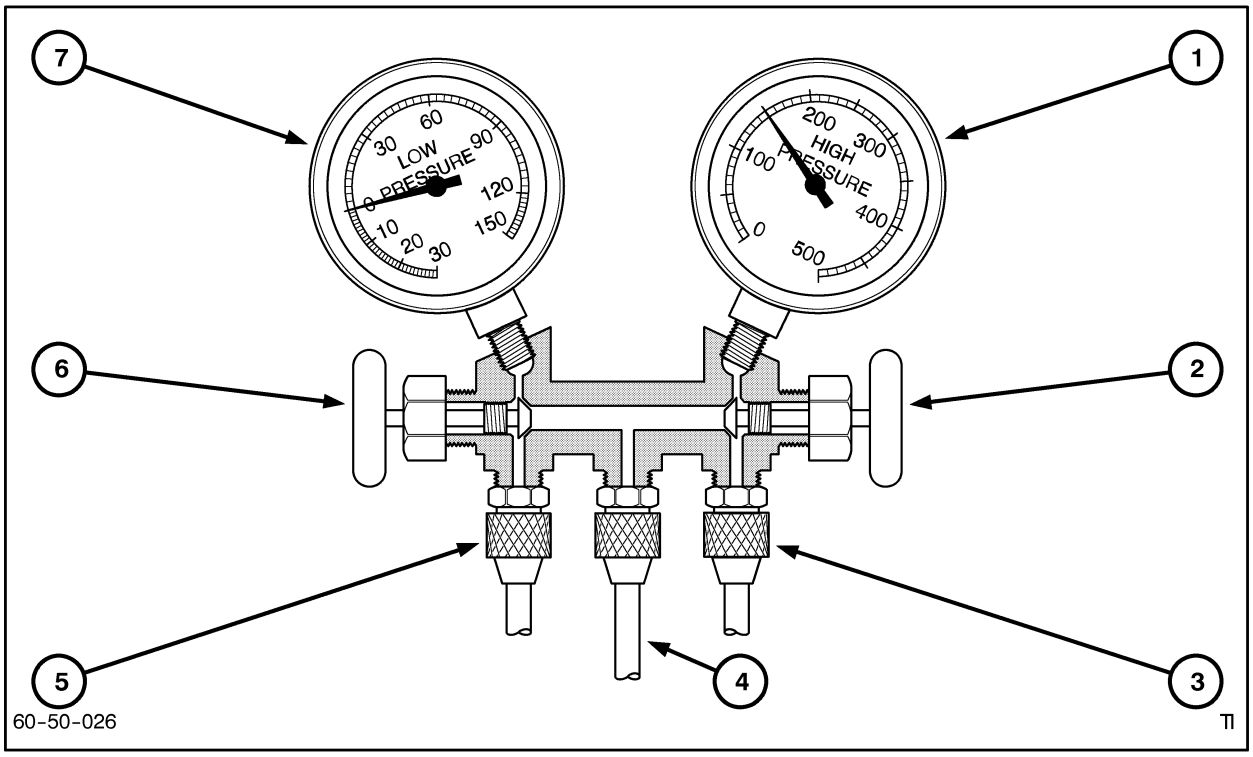

Performance Test Example 8

28

1. High Side Low
2. High Side Hand Valve Closed
3. High Side Hose Connected to High Side Service Connector
4. Not Used
5. Low Side Hose Connected to Low Side Service Connector
6. Low Side Hand Valve Closed
7. Low Side Low

PROBLEM: Insufficient cooling.

CAUSE: Improper operation of thermostatic expansion valve (stuck closed).

CONDITIONS*

Low side pressure too low (zero or vacuum). Gauge should read 1-2 bar (15-30 lbf/in^2).

High side pressure low. Gauge should read 13.3-14.8 bar (194-215 lbf/in^2).

Evaporator air cool, but not sufficiently cold.

Evaporator inlet pipe surface shows considerable moisture or frost.

Low pressure switch cutting out.

CORRECTIVE PROCEDURES

1. Place finger on expansion valve to evaporator tube. If too cold to touch, proceed as follows:

   Operate the system at maximum cooling.

   Check the low side gauge. The pressure should drop slowly.

2. If the procedure outlined in Step 1 shows that the expansion valve is defective, proceed as follows:

   Discharge system

   Replace expansion valve

   Evacuate the system.

   Charge the system.

   Performance test the system.

DIAGNOSIS: *Expansion valve is not permitting a sufficient flow of refrigerant. May be caused by valve stuck in restricted or closed position.*

***NOTE:** Test procedure based upon ambient temperature of 35°C (95° F). For proper high side gauge reading for other ambient temperatures, refer to the pressure temperature chart.*

PERFORMANCE TEST EXAMPLE 9

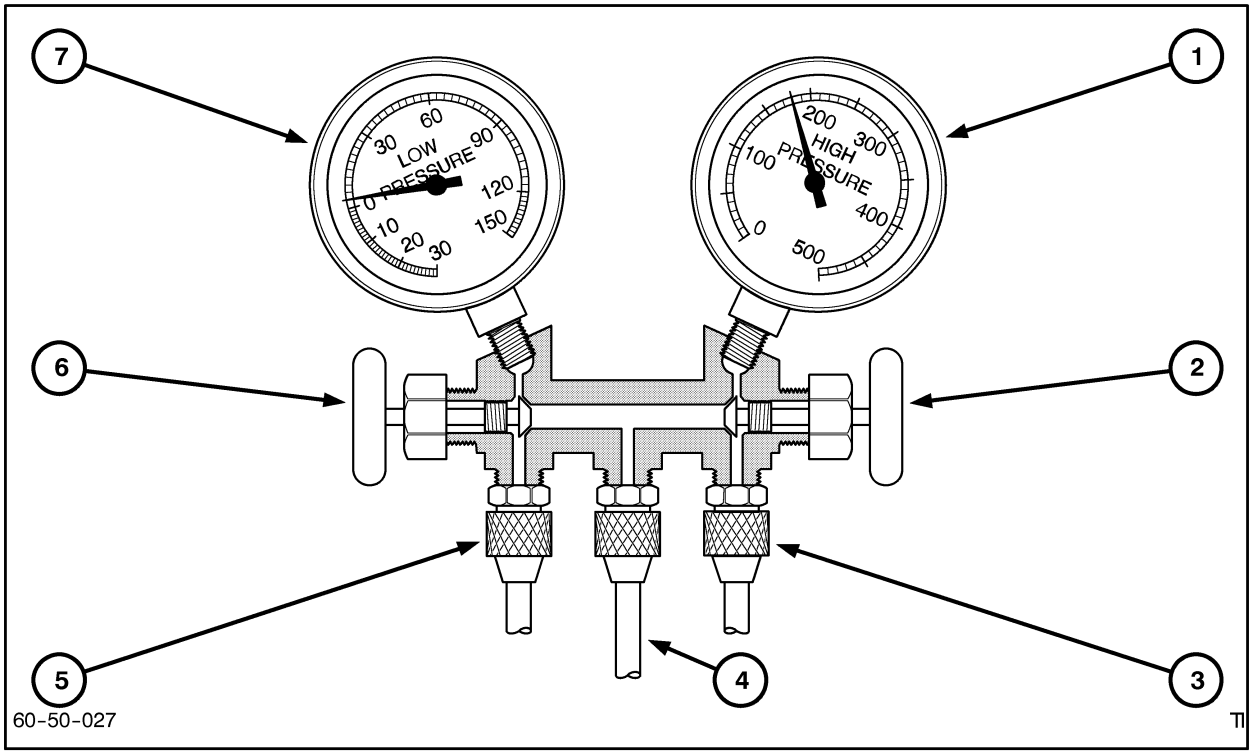

29

Performance Test Example 9

1. High Side Low
2. High Side Hand Valve Closed
3. High Side Hose Connected to High Side Service Connector
4. Not Used
5. Low Side Hose Connected to Low Side Service Connector
6. Low Side Hand Valve Closed
7. Low Side Low

PROBLEM:

Insufficient cooling.

CAUSE:

Restriction in high side of system.

CONDITIONS*

Low side pressure too low. Gauge should read 1–2 bar (15-30 lbf/in^2).

High side pressure too low. Gauge should read 13.3–14.8 bar (194–215 lbf/in^2).

NOTE: *A normal or high reading of the high side pressure gauge under these conditions indicates the system is overcharged or the condenser or receiver/dryer is too small.*

Evaporator only slightly cool.

Liquid line and receiver/dryer are cool to touch and show frost or considerable moisture.

CORRECTIVE PROCEDURES

1. Discharge and recover the refrigerant from the system.
2. Replace the liquid lines, receiver/dryer, or other obstructed components.
3. Evacuate the system.
4. Charge the system.
5. Performance test the system.

DIAGNOSIS: *Restriction in the liquid line and/or receiver/dryer resulting in a "starved" evaporator (compressor moving refrigerant from the evaporator faster than it can enter).*

***NOTE:** Test procedure based upon ambient temperature of 95° F. For proper high side gauge reading for other ambient temperatures, refer to the pressure temperature chart.*

PERFORMANCE TEST EXAMPLE 10

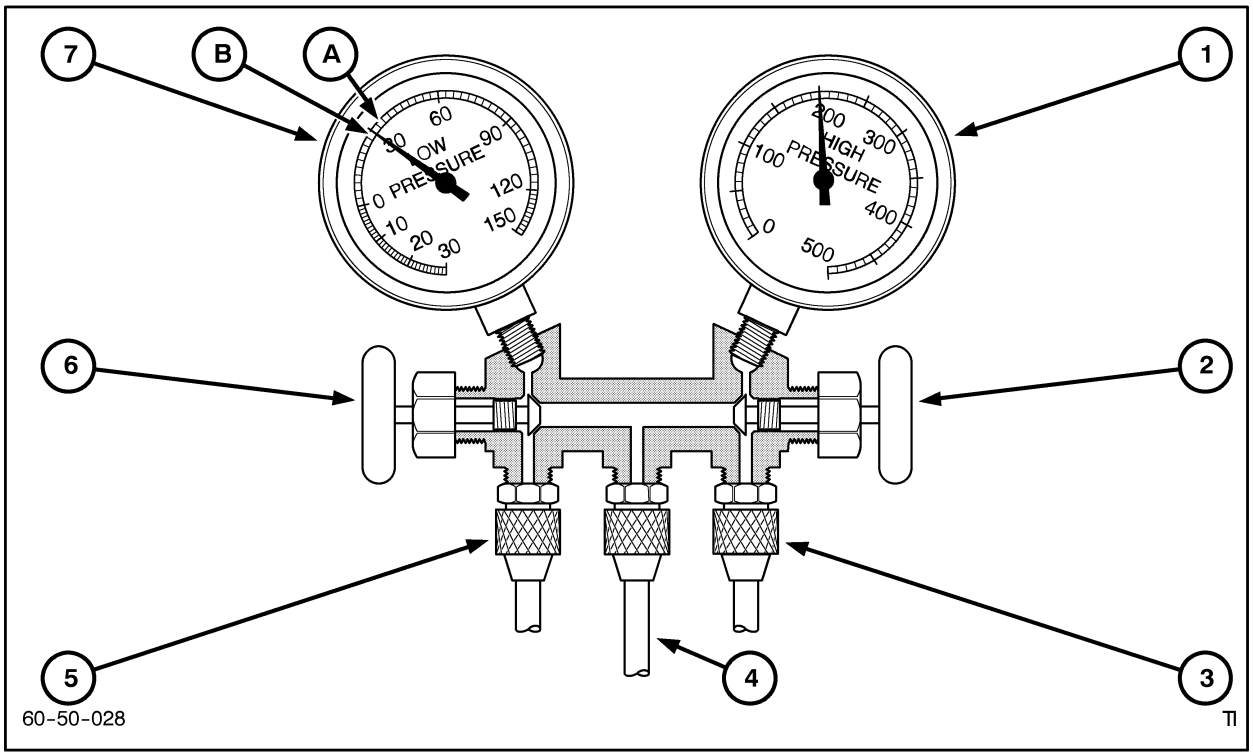

30

Performance Test Example 10

1. High Side Normal
2. High Side Hand Valve Closed
3. High Side Hose Connected to High Side Service Connector
4. Not Used
5. Low Side Hose Connected to Low Side Service Connector
6. Low Side Hand Valve Closed
7. Low Side Gauge
   Compressor Cycles on at 34 lbf/in^2 (2.3 bar)
   Compressor Cycles off at 28 lbf/in^2 (1.9 bar)

PROBLEM:

Compressor cycles (cuts in and out) too rapidly.

CAUSE:

Thermostatic switch defective.

CONDITIONS*

Low side pressure readings too high during both “on” and “off” compressor cycles and between cycles. Readings should be:

0.8–1.0 bar (12-15 lbf/in^2) - cycle “off”

2.5–2.7 bar (36-39 lbf/in^2) - cycle “on”

1.7–1.9 bar (24-27 lbf/in^2) - between cycles

High side pressure normal. Gauge should read 13.3–14.8 bar (194–215 lbf/in^2).

CORRECTIVE PROCEDURES

1. Stop the engine and shut off A/C system.
2. Replace thermostatic switch with switch of same type.
3. Make sure the switch’s temperature sensor is installed in the same position and depth (in evaporator core) as previous.
4. Performance test the system.

DIAGNOSIS: *Defective thermostatic switch.*

***NOTE:** *Test procedure based upon ambient temperature of 35°C (95° F). For proper high side gauge reading for other ambient temperatures, refer to the pressure temperature chart.*

LEAK TESTING, DISCHARGING and CHARGING THE AIR CONDITIONING SYSTEM

Leak Testing

To perform a leak test if refrigerant leakage is suspected, use an electronic leak detector, Figure 31 following manufacturer's instructions.

Electronic leak detectors use flashing lights or sound to alert the operator to a leak. If the leak detector's sensitivity is adjustable, be sure you calibrate the detector according to the manufacturer's instructions before use.

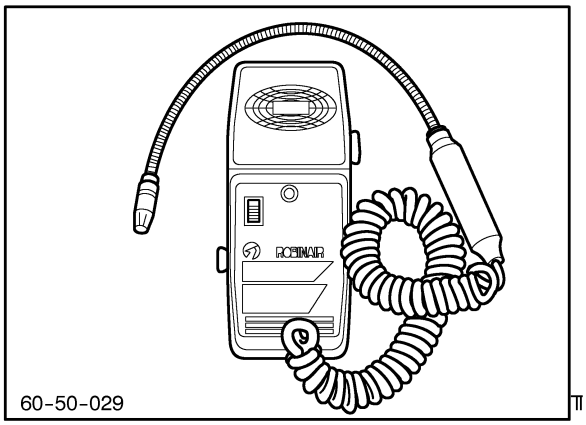

31

When using a leak detector, keep in mind that a very slight amount of leakage in the compressor pulley area is normal and does not necessarily indicate a repair is required.

When a leak is located, follow these steps.

- Discharge the system using a certified freon recovery system.
- Repair the leak.
- Evacuate the system.
- Partially charge system with 400 grammes (14 ozs) of refrigerant.
- Check system for leaks.
- Fully charge the system.

Always check the system for leaks as a final test after evacuating and before recharging. Refer to Evacuating the system.

Discharging The System

Legislation has been introduced banning the release of refrigerant into the atmosphere.

Whenever overhauling the air conditioning system or performing other tasks which require the air conditioning system to be dismantled it is necessary to discharge the refrigerant gas before commencing repair.

Before you can dismantle an air conditioning system for repairs, you must discharge and recover the refrigerant using a **certified** recovery unit in accordance with the manufacturers instructions.

Figure 32 shows a combined refrigerant recovery, evacuation and recycling/charging station. This equipment removes R–134a refrigerant from the air conditioning system, recycles and recharges all in one hook up. The unit is designed to be used with the manifold gauge set built into the control panel.

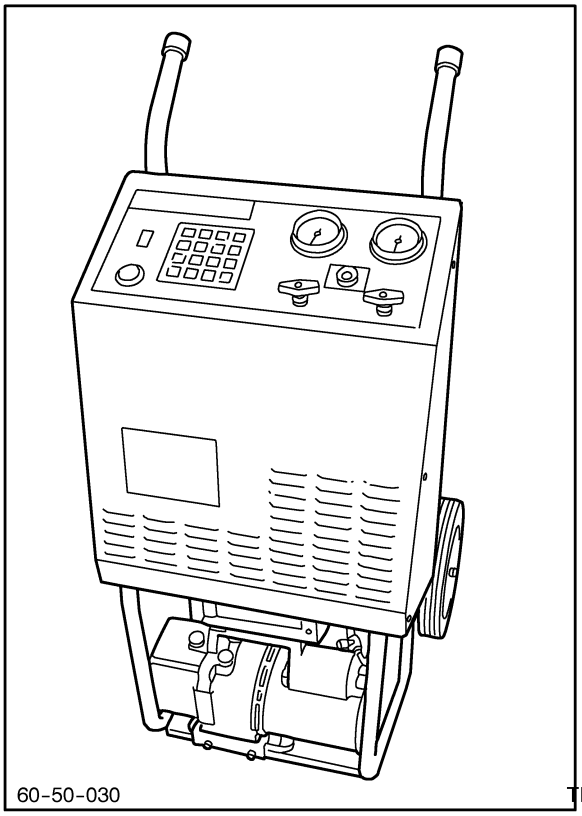

32

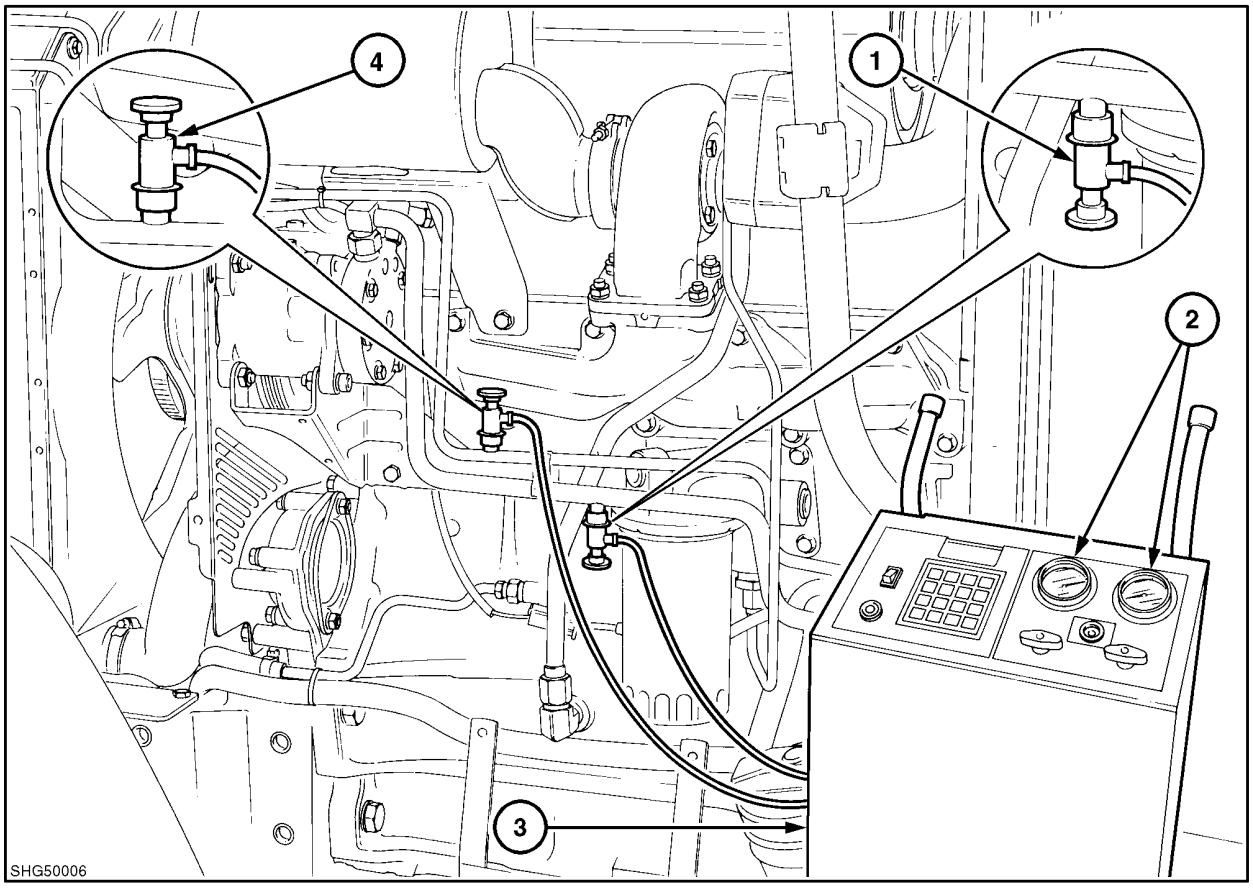

Connecting Recovery Evacuation and recycling/Charging Station to the Tractor 33

1. High Side Service Valve (Red Hose)
2. Built In Manifold Gauge Set
3. Recovery/Recharging Unit
4. Low Side Service Valve (Blue Hose)

Other recovery systems are available where the manifold gauges are not an integral part of the machine. When this type of equipment is used a separate manifold gauge set must be used.

The following is a summary of the steps for discharging the system using a recovery/recycling unit

⚠ WARNING ⚠

Never *discharge refrigerant gas into the atmos phere. Always wear safety goggles and glove when working with refrigerant. Only us authorised refrigerant tanks.*

IMPORTANT: *Always follow the manufactures instructions when operating recovery equipment.*

1. Run the vehicle's air conditioning system for a few minutes.
2. Set up the recovery unit following manufacturer's instructions. Ensure that the units red (high side) hose is connected to the high side fitting and the blue (low side) hose to the low side fitting, Figure 33.

NOTE: *If a unit requiring the manifold gauge set is being used, the low and high sides of the manifold set are connected to the low and high sides of the tractor air conditioning system. The hose from the recovery unit is then connected to the manifold centre port. Refer to Figure 34.*

3. To recover refrigerant, open both high and low side valves on the control panel or the valves on the manifold gauge set if being used, Figure 34.
4. Open the valves labeled "gas" and "liquid" on the recovery unit refrigerant tank, Figure 35.
5. Plug in the units power cord
6. Operate the recovery system in accordance with the manufacturers instructions.

The compressor will shut off automatically when the recovery is complete.

FLUSHING THE SYSTEM

Air conditioning systems may occasionally become contaminated with solid particles. This contamination may be the result of allowing dirt to enter the system while it was open, from aluminum corrosion or sludge, or from disintegrated compressor reed plates. Contamination of this nature can result in plugged evaporators, condensers and expansion valves.

Contaminated systems must be flushed with a special flushing solvent to remove the unwanted material. Prior to flushing, the system must be discharged as described in “Discharging the System”.

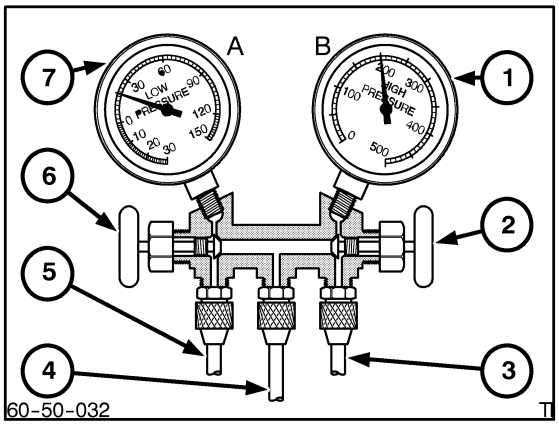

Manifold Gauge Set 34

1. High Side Gauge
2. High Side Shut-off Valve
3. High Side Hose
4. Centre Service Hose
5. Low Side Hose
6. Low Side Shut-off Valve
7. Low Side Gauge

Each individual component must be flushed after disconnecting every hose fitting.

The compressor and expansion valve can not be flushed, therefore, the compressor should be disassembled and cleaned or replaced and the expansion valve should be replaced. When flushing the system always replace the receiver/drier.

NOTE: *Never use any solvent for flushing an air conditioning system other than a special flush solvent made specifically for air conditioning systems. Always follow the manufacturer’s recommendations and directions for using the flushing equipment and solvent.*

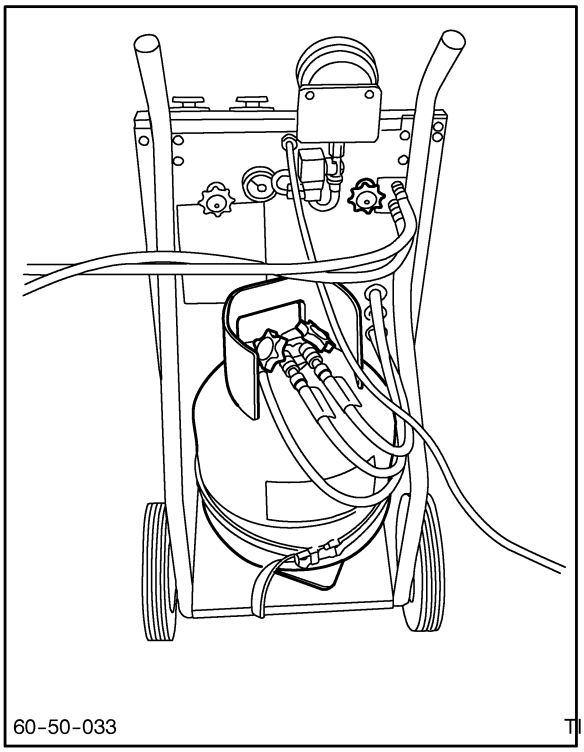

35

Re-assemble and evacuate the system to remove air and moisture as described in “Evacuating the System”.

EVACUATING THE SYSTEM

IMPORTANT: *A system in which the refrigerant has been recovered to facilitate repairs, must be evacuated before new refrigerant is installed.*

Air and moisture are removed by evacuating the system using a vacuum pump.

The automatic recycling, recharge and evacuation stations or evacuating and charging stations available throughout the air conditioning industry incorporate a vacuum pump within the assembly. If this type of equipment is not available a separate vacuum pump and manifold gauge set must be used.

As the system is evacuated the boiling point of any moisture within the system is similarly lowered. As the vacuum increases the boiling reduces to below that of the ambient temperate and the moisture is subsequently boiled away.

The relationship of system vacuum to the boiling temperature at which the water vapor is removed from the system is as follows:

System Vacuum		Temperature	
In Mercury	Cm. of Mercury	° F	° C
28.0	71.0	100	38
28.9	73.4	80	27
29.4	74.6	60	16
29.7	75.4	40	5
29.8	75.7	20	-7
29.9	75.9	0	-18

NOTE: *For every 1000 feet (305 m) above sea level, the vacuum gauge reading must be corrected by adding 1″ (2.54 cm) of mercury to compensate for the change in atmospheric pressure.*

IMPORTANT: *Be sure the system is completely discharged as refrigerant will damage the vacuum pump.*

1. If the manifold gauge set FNH00172 is being used connect the low and high sides of the manifold to the low and high sides of the tractor air conditioning system as described for discharging the system.

   Connect the manifold centre hose to the vacuum pump suction port as per the manufacturers instructions.

   Fully open both the low and high side gauge shutoff valves.

2. If a combined recovery/evacuation unit is to be used attach the unit to the air conditioning system in accordance with the manufacturers instructions. Be sure to read all installation and operating instructions carefully before starting the unit.

3. After starting the evacuation cycle, note the low side gauge to be sure the system pulls down into a vacuum.

4. Time the evacuation for a minimum of 20 minutes from the point when lowest vacuum is attained.

5. When the low side gauge attains the lowest steady vacuum, stop the evacuation process.

NOTE: *The vacuum pump achieves ultimate vacuum with the vented exhaust valve closed.*

6. Check the system by closing the gauge shut–off valves, turning the vacuum pump off and noting the low side gauge reading. A loss of more than 2″ (5 cm) of vacuum in 5 minutes indicates either a leak or moisture in the system.

7. If the gauge needle remains stationary and the vacuum is maintained for 3-5 minutes, close both the high and low side manifold hand valves, turn off and disconnect the center hose from the pump. The system is now ready for charging.

8. If a leak is detected, charge the system with approximately 14 ozs (400 g) of refrigerant, see charging the system and identify leak using a leak detector.

9. Once the leak is located discharge and recover the refrigerant in the system, repair the leak, then repeat the evacuation procedure.

CHARGING THE SYSTEM

IMPORTANT: *Be sure there are no leaks in the system and the system has been fully evacuated. Observe all safety recommendations when handling refrigerant R-134a, see "Precautions when Handling Refrigerant R-134a" in this Section.*

1. Ensure the charging unit is correctly connected to the tractor air conditioning system in accordance with the manufacturers instructions.
2. If a charging unit, in conjunction with the manifold gauge set is used, open the high and low side hand valves on the manifold.
3. Charge the system with 1.4kg (3.1lbs) of refrigerant as per the manufacturers instructions.
4. If the charging rate becomes very slow close the high side valve, start the tractor and set engine speed to idle. Turn 'ON' the air conditioning so that the compressor can pull the remainder of the refrigerant into the system.
5. If the refrigerant charge will not completely transfer to the air conditioning system, recover and recharge the system.
6. Close the high and low side valves on the units control panel, or manifold gauge set if being used and test the air conditioning as detailed in Performance Testing The Air Conditioning System on Page 15.

NOTE: *After charging a system use the following start up procedure to ensure the lubricating oil is properly dispersed around the system:*

- Ensure air conditioning is switched OFF.
- Start the engine and bring speed down to idle.
- Turn the air conditioning ON and allow system to operate for at least one minute before increasing engine speed.

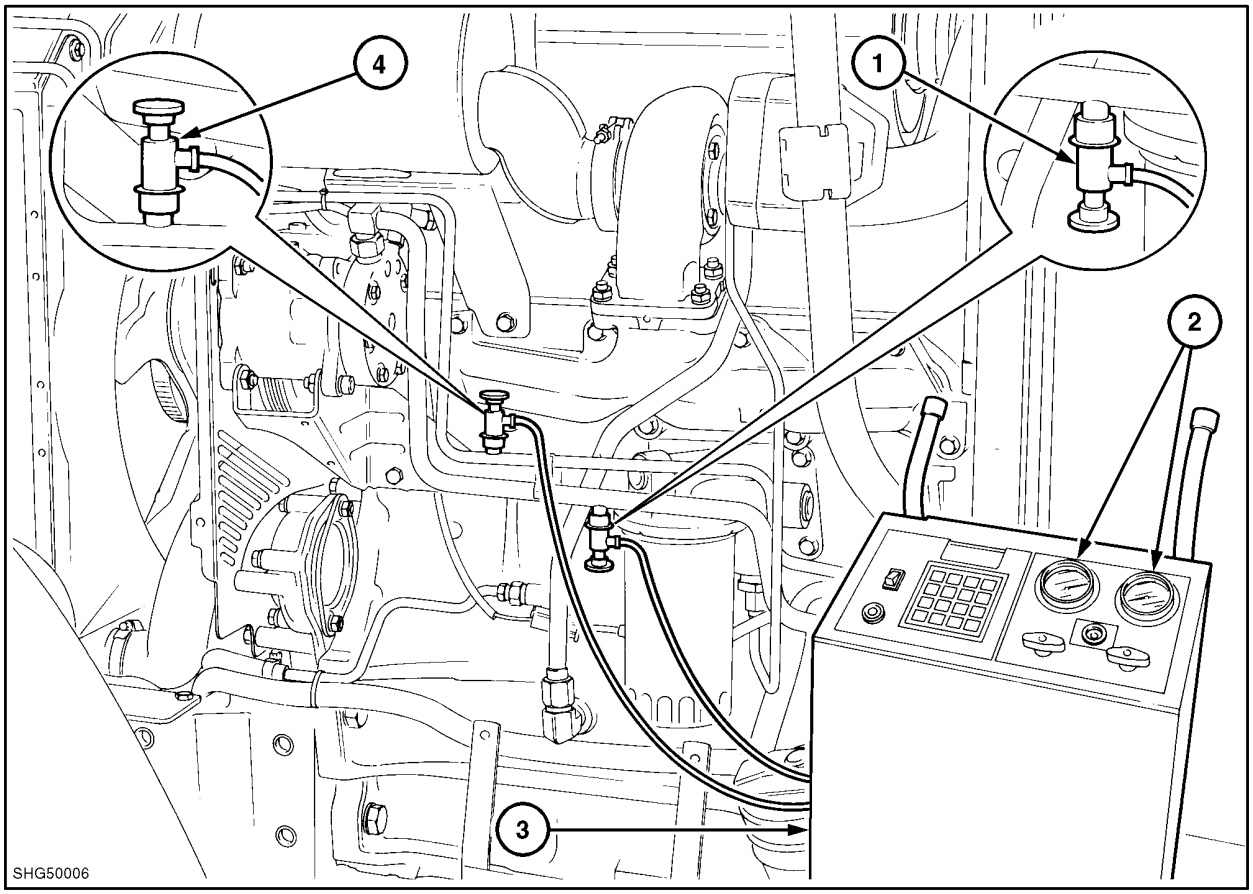

Connecting Recovery Evacuation and Recycling/Charging Station to the Tractor 36

1. High Side Service Valve (Red Hose)
2. Built In Manifold Gauge Set
3. Recovery/Recharging Unit
4. Low Side Service Valve (Blue Hose)

COMPONENT OVERHAUL (EXCLUDING COMPRESSOR)

GENERAL

WARNING

Before disconnecting components in the air conditioning system the refrigerant gas must be discharged and recovered using a certified recovery system. Refer to Discharging the system on Page 9-32. ***Do Not*** *discharge the gas into the atmosphere.*

If an air conditioning component is to be replaced during a system overhaul it is necessary to drain any refrigerant oil that has collected in the component being replaced into a clean calibrated container.

A volume of clean refrigerant oil equivalent to that removed from the replaced component must then be added to the new item before being installed onto the tractor.

Upon completion of the repair evacuate, recharge, leak test and performance test the system to ensure correct operation.

EXPANSION VALVE

The expansion valve is not a serviceable item and must be replaced if defective.

1. Fully discharge the air conditioning system.

2. Remove roof access hatch and evaporator cover plate to gain access to the valve, Figure 37.

3. To gain access to the expansion valve spring lock couplings partially lift the evaporator core from its position in the cab roof.

4. Disconnect the two spring lock couplings to the expansion valve.

5. Remove Allen screw securing the inlet and outlet connections to the valve, Figure 38 and pull valve from tubing.

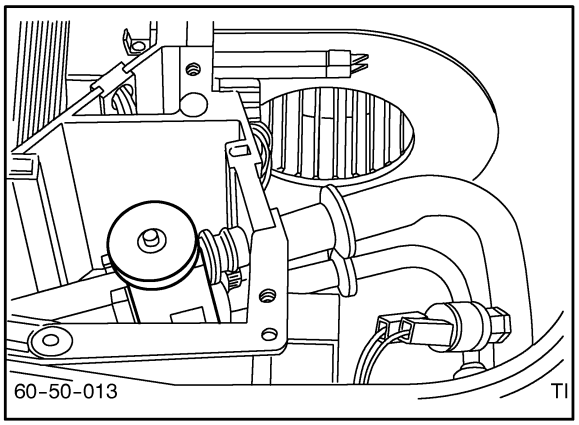

37

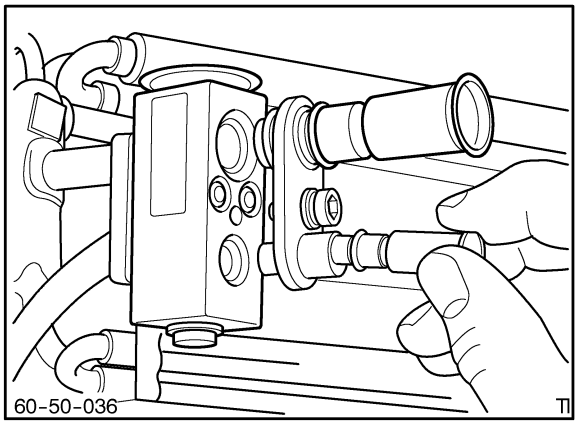

38

6. Replace the ‘O’ ring seals and lubricate with refrigerant oil prior to installing the valve using disassembly procedure in reverse, Figure 39.

7. Evacuate, leak test and recharge the system.

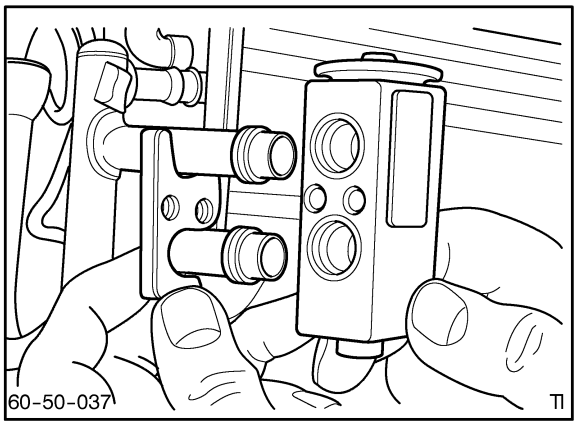

39

EVAPORATOR

1. Close the heater shut-off valve on the rear of the inlet manifold, Figure 40.

2. Turn the cab heater temperature control to maximum heat.

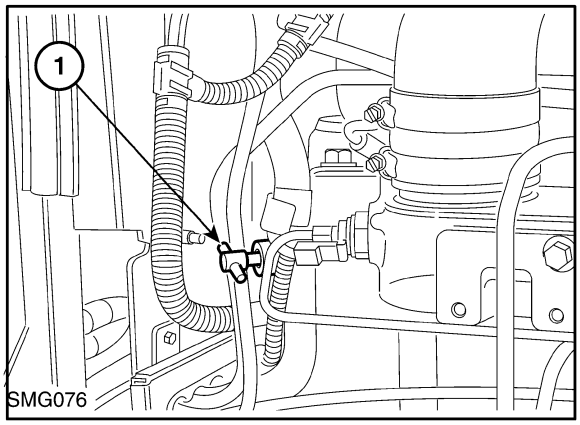

40

3. Apply a clamp to the heater return hose at the left side of the engine. Disconnect the hose and drain the heater system of coolant, Figure 41.

4. Discharge and reclaim refrigerant gas using certified recovery systems.

5. Remove the black cover plate to reveal evaporator assembly.

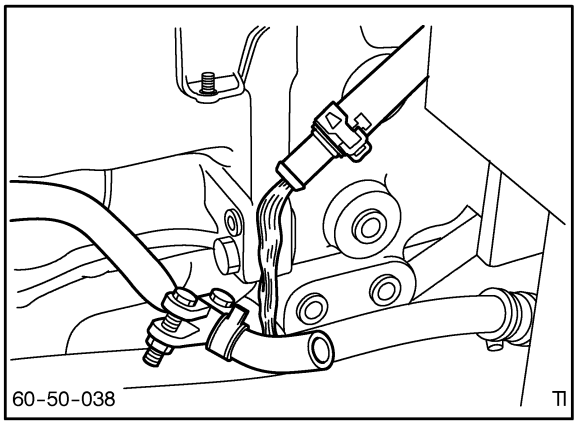

41

6. Partially lift evaporator and heater core from plastic housing to improve access to hoses, Figure 42.
7. Remove temperature cycling control thermocouple, Refer to Figure 43.
8. Disconnect tubing to expansion valve.
9. Disconnect heater hoses and remove evaporator and heater core assembly.
10. Check the evaporator assembly fins for damage. Straighten fins if necessary.
11. Clean the evaporator core of all foreign material to be sure it is free of obstructions.

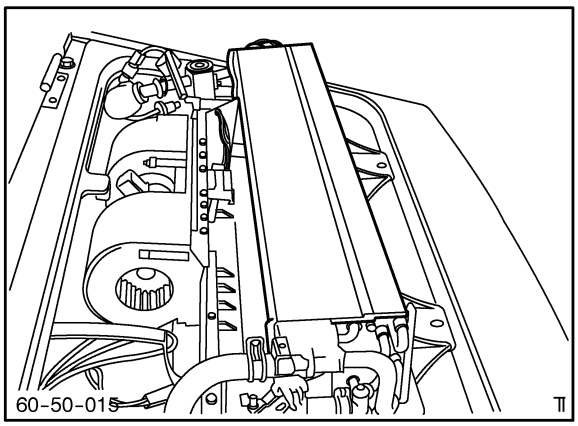

42

12. Check the evaporator assembly for indications of refrigerant leakage. If damage or leaks are evident, replace the evaporator core.
13. If a new evaporator is to be installed drain the refrigerant oil in the evaporator into a clean calibrated container. Measure the quantity of oil obtained and add the same quantity of new refrigerant oil directly into the replacement evaporator core.
14. Install evaporator using disassembly procedure in reverse.
15. Evacuate, leak test and recharge the system.

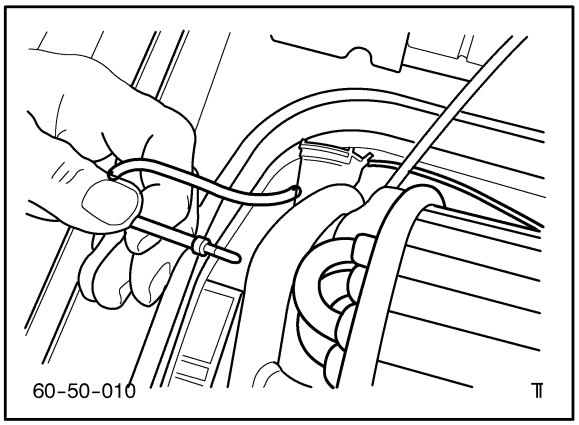

43

AIR CONDITIONER TEMPERATURE CYCLING CONTROL SWITCH

1. Remove the black evaporator cover plate.
2. Partially lift evaporator and heater core and remove temperature cycling control switch thermistor from left hand end of evaporator, Figure 44.

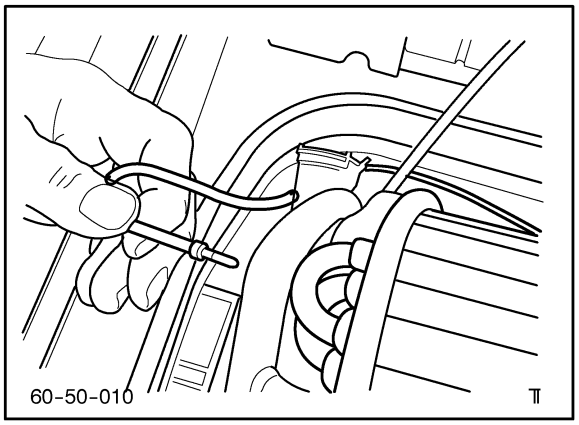

44

3. Carefully pull and disconnect the switch wiring connector from beneath the plastic housing which holds the evaporator and blower motor assembly. Refer to Figure 50.
4. Remove temperature cycling control switch, Figure 45.

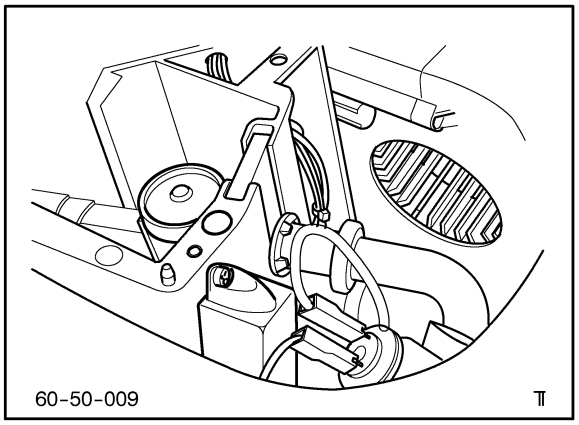

45

LOW PRESSURE CUT-OUT SWITCH

1. With the engine ‘Off’ check continuity across the switch contacts, Figure 46. If the switch shows ‘Open Circuit’ replace as detailed below.

NOTE: *The switch can be replaced without discharging the system.*

2. Remove switch, Figure 46, by unscrewing from self sealing schrader valve.
3. Replace with new switch and connect to harness.

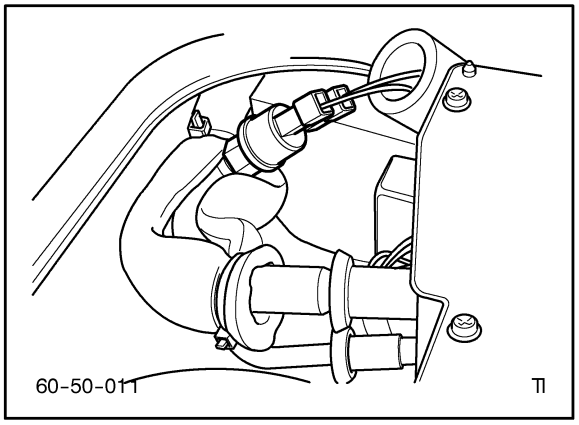

46

BLOWER MOTOR and FAN ASSEMBLY

The blower motor can if required be removed without discharging the system as follows:-

1. Remove the cab heater temperature control knob, Figure 47 and then unscrew the control shaft retaining nut.

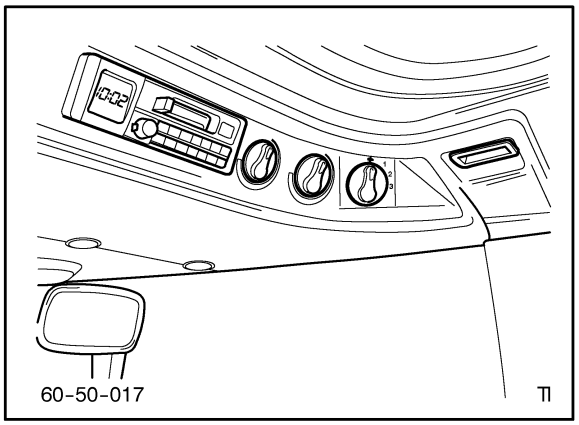

47

2. Remove the 3 head lining studs situated close to the air louvre vents inside the front of the cab.

3. Raise the cab roof and withdraw the heater control mechanism, Figure 48, from the control panel.

4. Remove the visible screws which attach the motor to the plastic air conditioning housing in the cab roof.

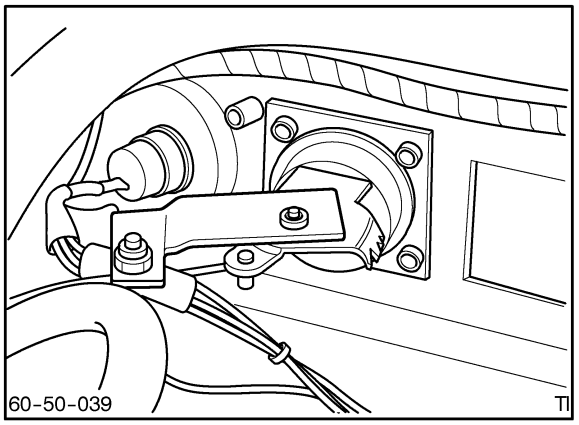

48

5. Remove the 2 retaining bolts from the plate which covers the evaporator and then remove the 2 bolts securing the plastic evaporator housing to the cab roof.

6. Carefully lift the front of the plastic evaporator housing and turn the complete assembly over towards the rear of the cab Refer to Figure 49 and Figure 50.

NOTE: *Take care not to damage hoses during this operation or spill any water onto the cab roof.*
If the cab heater hoses restrict movement of the housing drain the heater assembly and disconnect the hoses.

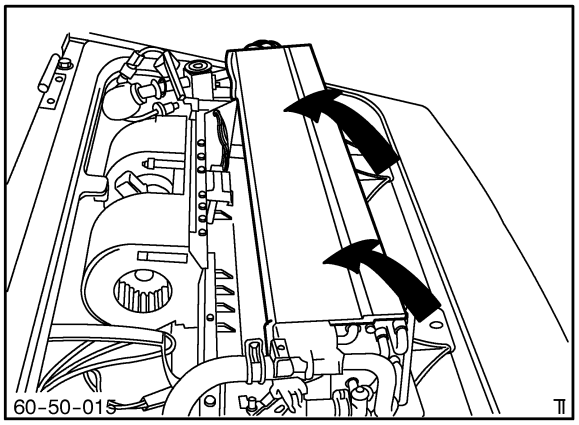

49

7. Disconnect the motor wiring connector block.

8. Remove the remaining motor securing screws and withdraw motor.

9. Re-assembly follows the disassembly procedure in reverse. During re-assembly ensure the 4 drain hoses are reconnected to the plastic air conditioning housing, Figure 50.

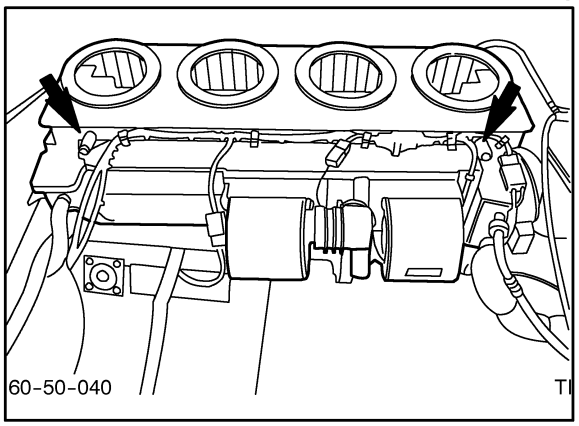

50

RECEIVER DRYER and CONDENSER

The receiver/dryer, (2) Figure 51, cannot be overhauled and must be replaced as an assembly. The receiver/dryer assembly should be replaced if it is suspected that moisture is in the system.

The receiver dryer must also be replaced if the system has been discharged and the air conditioning joints disconnected.

1. Discharge and reclaim refrigerant gas using certified recovery systems.

2. Slide condenser, (1) Figure 51, to side of tractor.

3. Separate the air conditioning tube spring lock couplings to the receiver dryer.

4. Remove the dryer from the tractor.

5. Disconnect the connections to the condenser.

6. Cap and plug all fittings to prevent any dirt entering the system.

7. Remove condenser from tractor.

8. Inspect the condenser assembly fins for damage and be sure they are not plugged.

9. Check the condenser for signs of leakage. If the condenser is damaged or leaking, install a new condenser assembly.

10. Drain the refrigerant oil from the receiver dryer into a clean calibrated container. Measure the quantity of oil obtained and add the same quantity of new refrigerant oil directly into the new item.

11. If the condenser is to be replaced, drain the refrigerant oil from the condenser into a clean calibrated container. Measure the quantity of oil obtained and add the same quantity of new refrigerant oil directly into the new condenser.

12. Soak new tubing connector ‘O’ rings in clean refrigerant lubrication oil and install onto tubing

13. Install condenser and a new receiver dryer.

14. Evacuate, leak test and recharge the system.

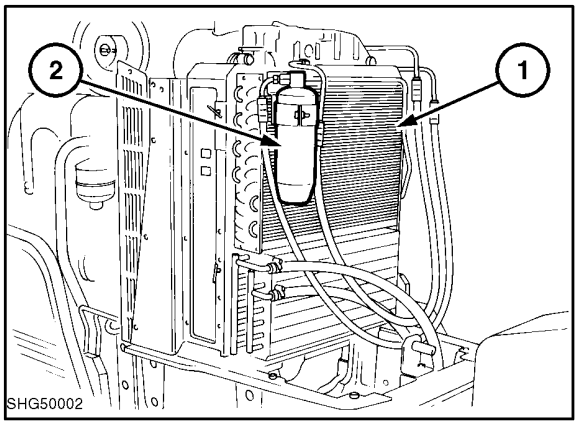

51

COMPRESSOR HIGH LOW CUT-OUT SWITCH

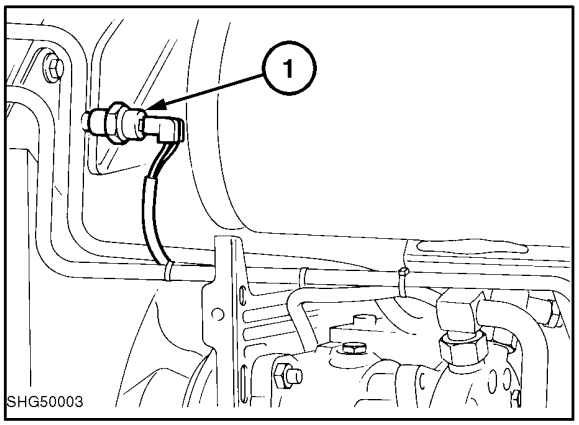

52

1. With the engine 'Off' check continuity across the switch contacts, (1), Figure 52. If the switch shows 'Open Circuit' replace as detailed below.

NOTE: *The switch can be replaced without discharging the system.*

2. Remove switch by unscrewing from self sealing schrader valve.

3. Replace with new switch and connect the harness.

CAB AIR FILTERS

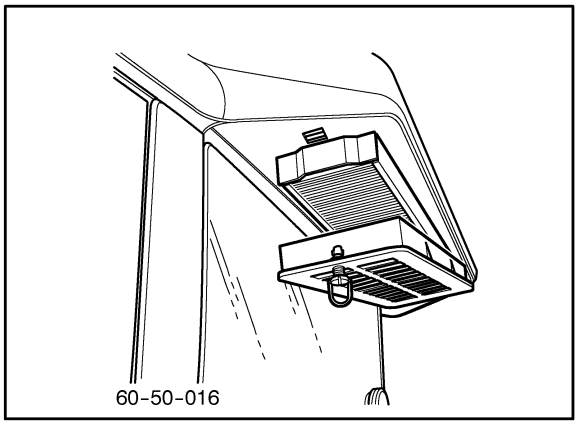

53

1. Before servicing the filters, switch off the blower and close the roof hatch, all windows and one door. Slam the final door closed and the resulting back pressure will dislodge most of the loose dirt from the underside of the filters.

2. Remove filter element(s), Figure 53 and clean by blowing with compressed air not exceeding 2 bar (30 lbf/in^2).

   Blow the dust from the upper surface through the element to the underside. Hold the nozzle at least 12 in (300 mm) from the element to prevent damage to the paper pleats.

3. Clean both filter chambers with a damp, lint free cloth.

4. Replace the filter elements with the rubber seal uppermost and re-install the covers.

COMPRESSOR – OVERHAUL

Compressor Removal

1. Discharge and reclaim refrigerant gas using certified recovery systems. Record the amount of oil discharged as (**X**).
2. Disconnect tubing to compressor.
3. Disconnect wiring connector to compressor clutch.
4. Disconnect drive belt, remove the four mounting bolts and remove compressor from tractor.
5. Drain the refrigerant oil from the old compressor into a clean calibrated container. Measure and record the quantity of oil as (**Y**). This information is required during installation of the new or overhauled unit.

NOTE: *It is necessary to rotate the compressor drive shaft several times to completely expel all the oil.*

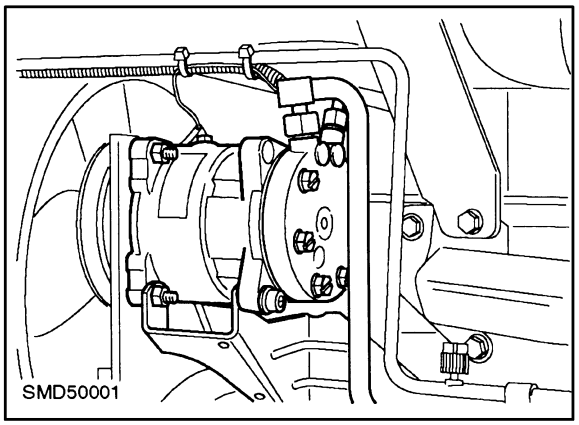

54

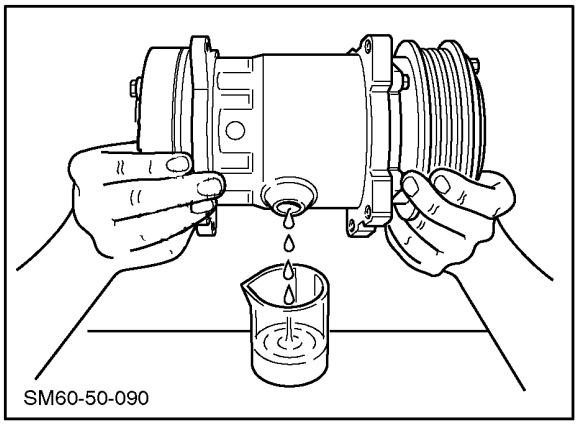

55

Compressor Installation

1. Installation is the reversal of the removal but the following points should be noted:–

- Torque the mounting bolts to 40–51Nm (29–38lbf.ft).

NOTE: *It is recommended that a new receiver / drier assembly is installed after any system component replacement or any repair that requires entry into the system.*

- Drain the oil from the new compressor to be fitted into a clean container, or if the old compressor is to be refitted, obtain a new can of refrigerant oil.
- Calculate the amount of oil to be installed as, **(x)+(y)**. Add this quantity of the new oil into the fill port on top of the compressor.

NOTE: *Refer to the following page regarding **Oil Level Measurement** to determine if the system oil quantity is correct.*

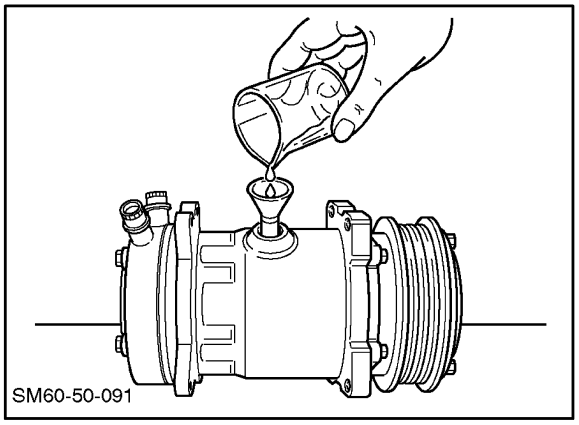

56

After charging a system use the following start up procedure to ensure the lubricating oil is properly dispersed around the system:

- Ensure air conditioning is switched OFF.
- Start the engine and bring speed down to idle.
- Turn the air conditioning ON and allow system to operate for at least five minutes before increasing engine speed.

Oil Level measurement (on vehicle)

Oil level in the compressor should be checked when a system component is removed or replaced or when an oil leak is suspected.

Use the following procedure to determine if the oil quantity is correct.

1. Start the engine and allow to idle. Switch on air conditioning and run the compressor for 10 minutes.
2. Recover the refrigerant from the system, very slowly so as not to lose any oil.
3. Carefully remove the oil filler plug. Turn the armature retaining nut to allow full insertion of the oil dipstick (1) Figure 57, supplied with kit NH.50–100.
4. Remove the dipstick and count the notches covered by the oil. An acceptable level of oil is when 5–7 notches are covered.
5. Add or subtract oil through the filler plug to obtain the correct level.
6. Ensure the filler hole seat and filler plug seal are clean and not damaged and Install the oil plug. Tighten to 15–25Nm (11–18lbf.ft).

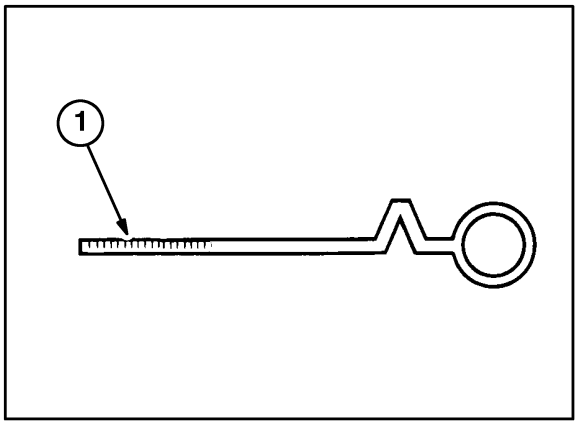

57

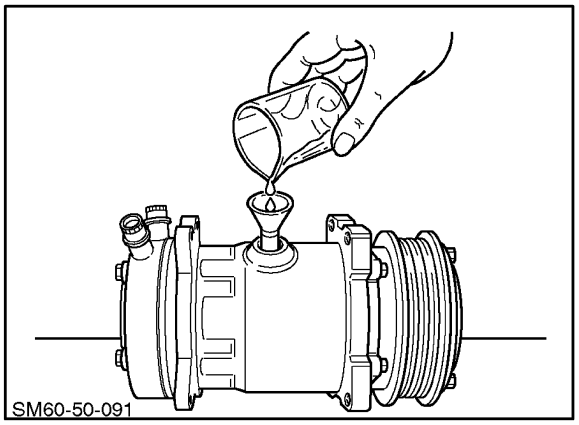

58

Oil Retained in System Components

After replacement of individual system components it will be necessary to add some oil to the system to make up the amount lost in the removed component. The table, on the right, shows some typical volumes for the components. It is, however, still recommended that the on vehicle oil level measurement procedure, described above, is carried out after a new component has been installed to establish correct oil quantity.

Component	Typical oil amount	
	fl.oz.	cc
Evaporator	2.0	60
Condenser	1.0	30
Receiver / drier	0.5	15
Hoses	0.3	10

Preliminary Inspection

1. Rotate the compressor shaft. Use a suitable socket on the hub centre bolt or by hand using the rubber dampers.

   If severe roughness is felt while rotating the hub, the compressor should be disassembled.

2. Using a 12 volt battery check current drawn by the field coil which should be between 3.6– 4.2 Amps.

   Very high current readings indicate a short circuit in the field coil and no current reading indicate an open circuit. Replace coil with either fault. Resistance of the coil using an ohmmeter should be approximately 3.0Ω at 20°C.

   A poor earth (ground) connection of the field coil will result in a low voltage.

3. Ensure clutch is disengaged and rotate pulley by hand. If roughness in the bearing is felt, it will be necessary to replace the pulley and bearing as an assembly.

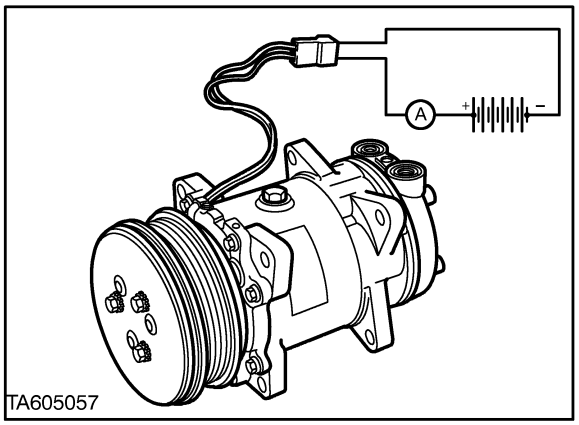

59

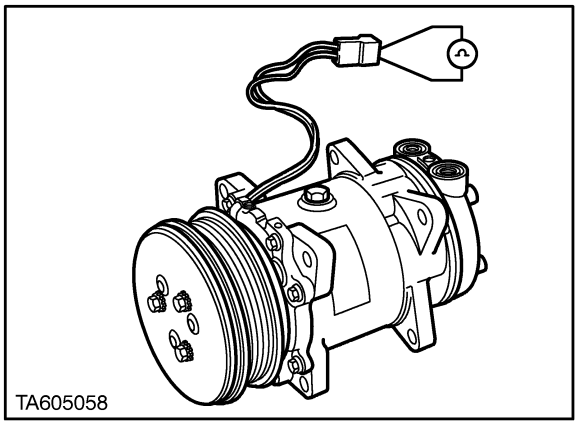

60

Clutch Disassembly

Removal

All clutch servicing should be done with the compressor removed from the vehicle:

1. Support the compressor. If using a vice, do not hold on to the housing.
2. Remove the cover on the front of the clutch plate.
3. Using the front plate tool hold the clutch plate stationary and remove the retaining nut from the end of the shaft. Figure 61.

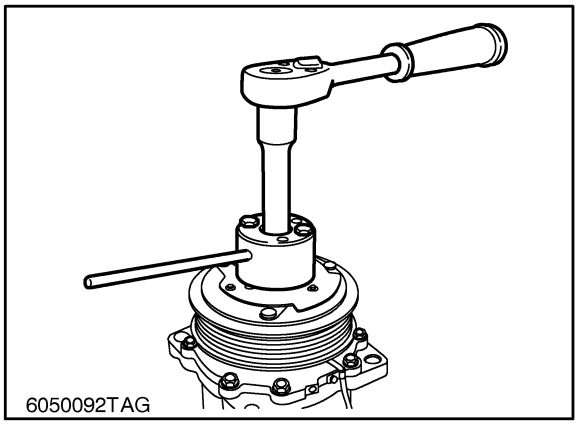

61

4. Place a thread protector over the end of the driveshaft and using a puller remove the clutch front plate, Figure 62.

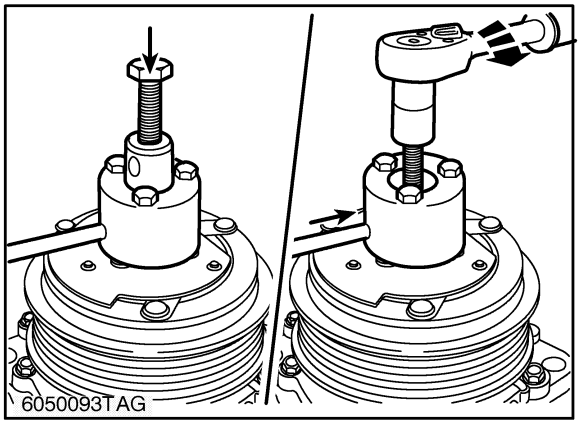

62

5. Carefully remove the bearing dust cover, if fitted.

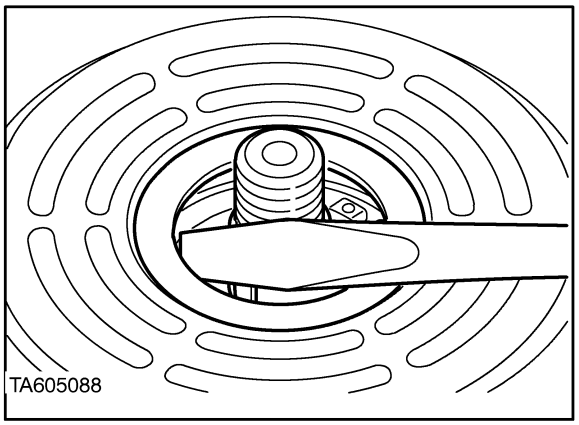

63

6. Remove the clutch shims

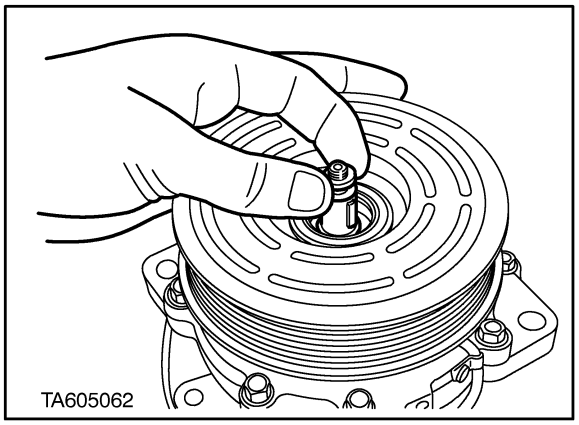

64

7. Remove the shaft key

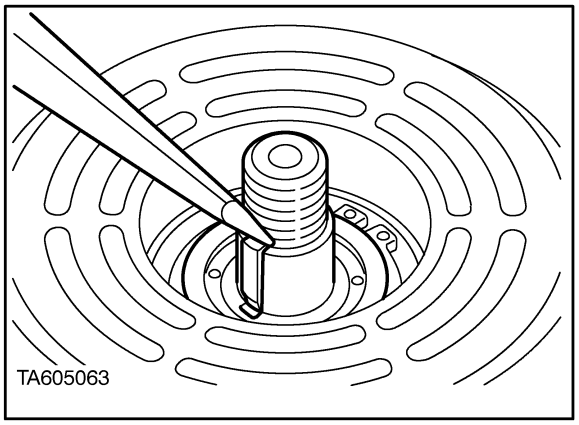

65

8. Remove the pulley bearing external snap ring

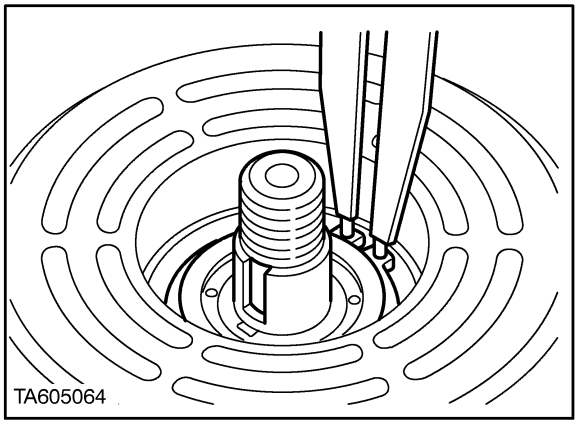

66

9. With a shaft protector over the exposed shaft, use a suitable puller to remove the clutch pulley.

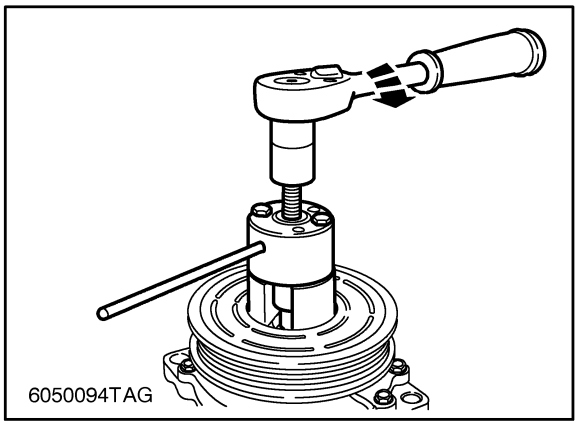

67

10. Inspect the pulley bearing for wear and replace where necessary.

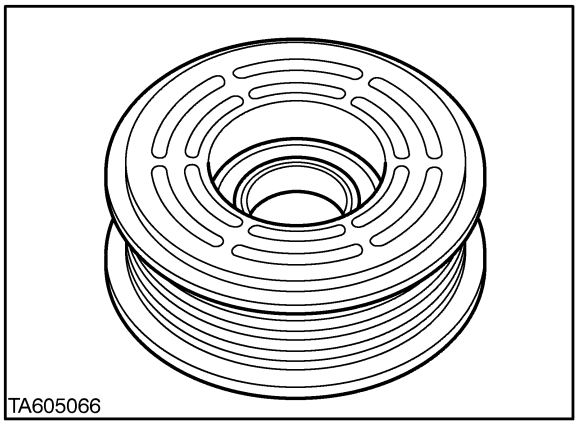

68

11. Remove the field coil wire retaining clip.

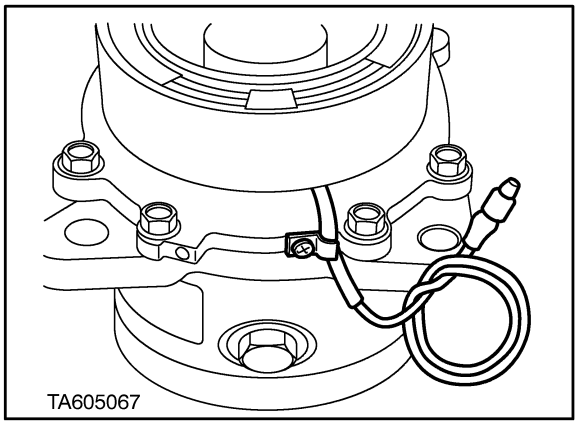

69

12. Remove the field coil retaining snap ring and lift the coil from the housing.

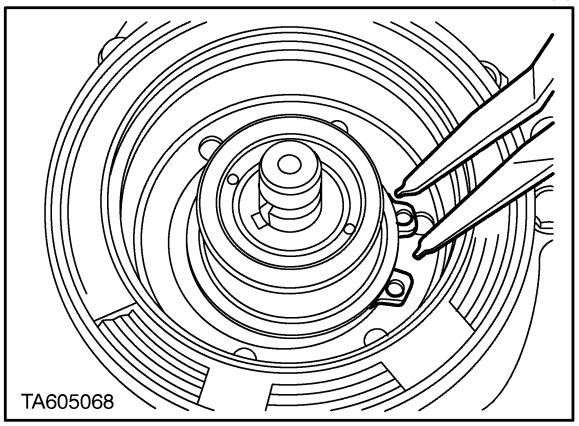

70

Clutch Reassembly

1. Install the field coil, ensuring that the lug on the compressor housing locates in the cut out on the back of the coil housing, secure with the snap ring.

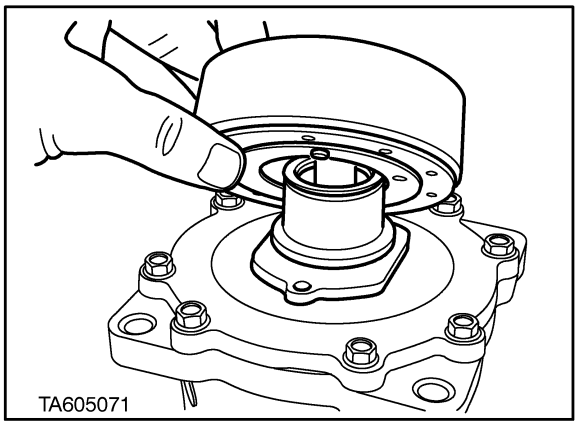

71

2. Position the pulley on the housing hub.

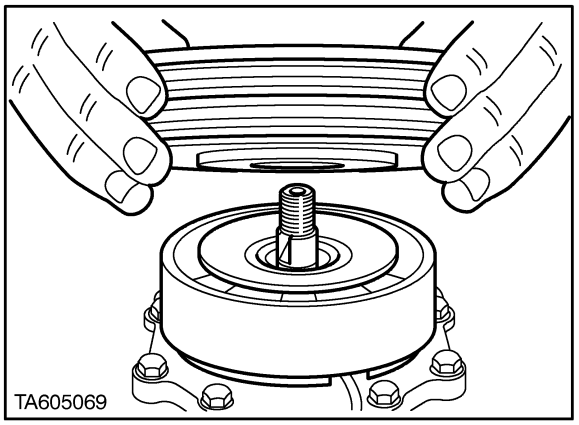

72

3. Using a suitable adaptor that rests firmly on the inner race of the pulley bearing, tap the pulley onto the front hub of the compressor.

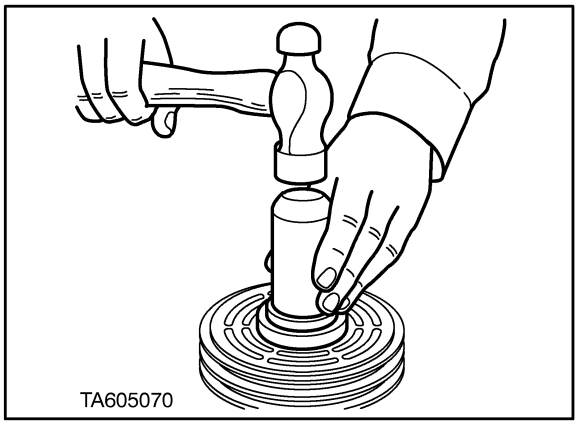

73

4. Install the bearing snap ring.

5. Replace the original shims, key and a new bearing dust cover.

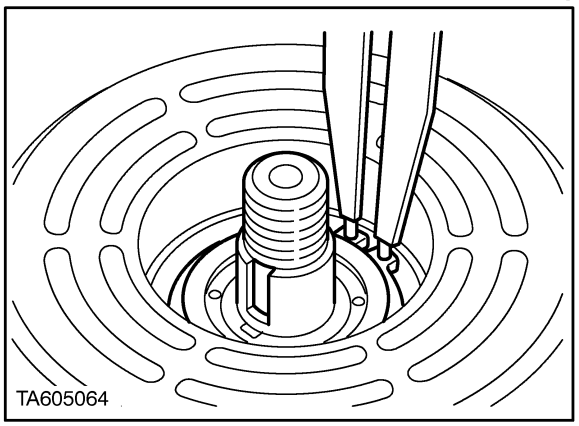

74

6. Install the clutch front plate and using a suitable adaptor, tap into position.

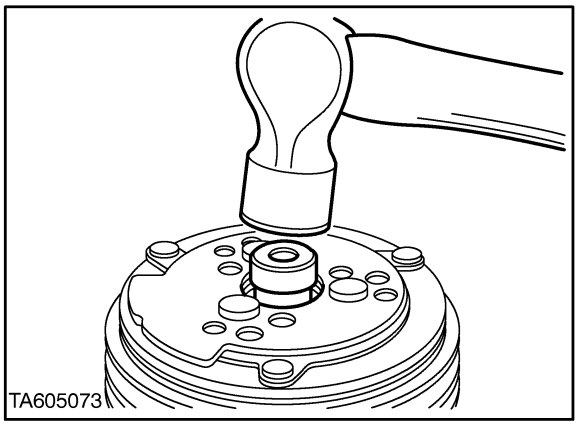

75

7. Replace the retaining nut and tighten to a torque of 18Nm (13lbf.ft).

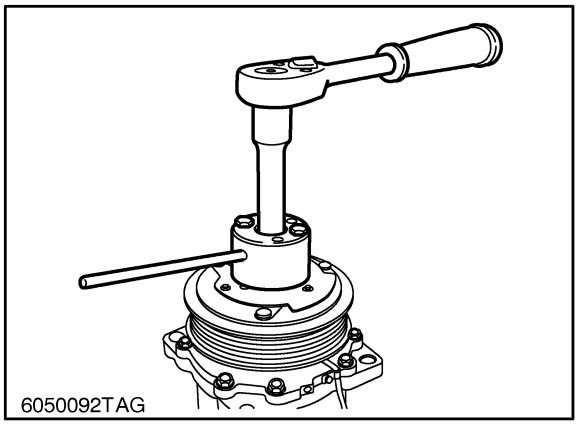

76

8. Check the clearance between the clutch front plate and pulley. This should be consistent around the circumference and be between 0.4–0.8mm (0.016–0.031in.)

9. If the air gap is not consistent, lightly pry up on the counter weighted front plate at the low spots or lightly tap down at the high spots.

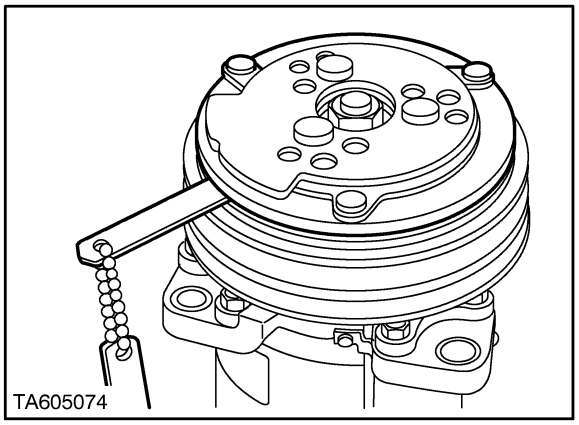

77

10. If the clearance is not within specification the shims under the front plate, Figure 78, should be added to or subtracted from until the correct clearance is obtained.

NOTE: *New shims are available in sizes 1.00, 0.50 and 0.13 mm, (0.040, 0.020 and 0.005 in.).*

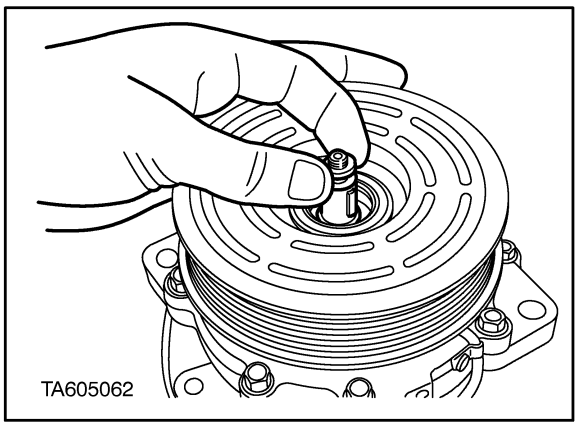

78

Shaft Seal Replacement

The refrigerant must be discharged from the system and the compressor removed from the vehicle prior to replacing the shaft seal.

Removal

1. Remove the clutch front plate, as detailed in steps 1 to 7 of clutch disassembly.

2. Using a suitable lever or pair of snap ring pliers, remove the felt ring.

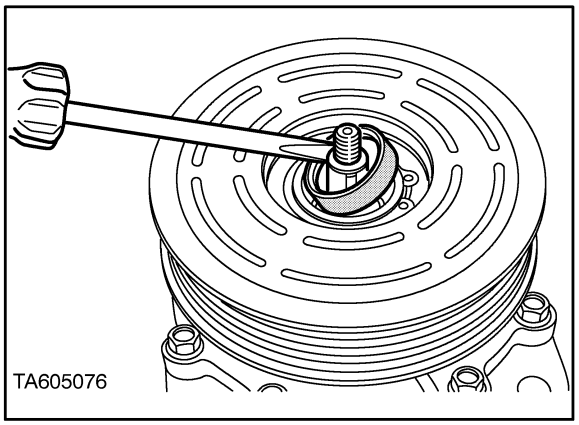

79

3. Remove the shaft seal retaining snap ring.

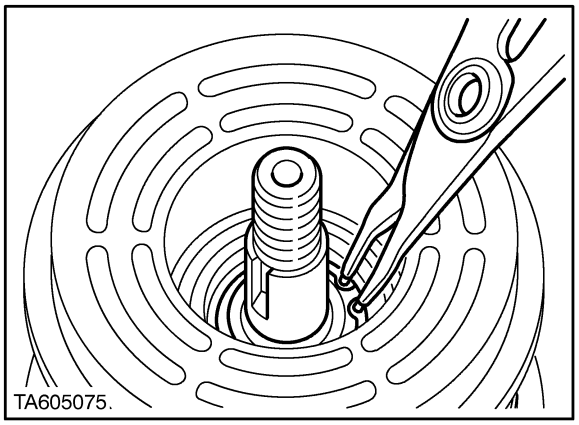

80

4. Insert the seal remover/installer tool. Twist the tool to engage the slots in the seal. Pull up to remove. Discard the seal.

NOTE: *If seal remover tool is not available, insert a suitable piece of hooked wire into the seal slot and pull out seal.*

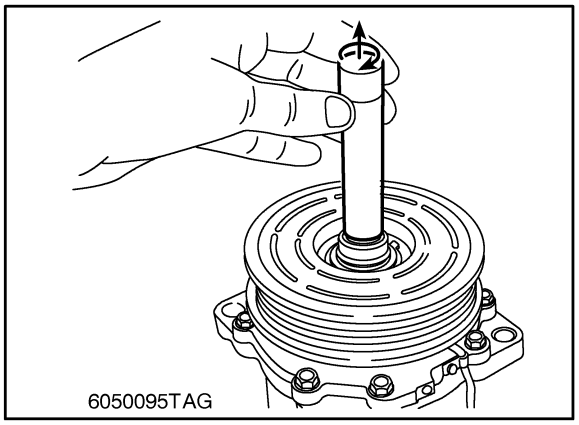

81

Installation

1. Thoroughly clean the seal cavity in the hub. Use ‘lint free’ cloth only.

2. Position the seal protector over the driveshaft.

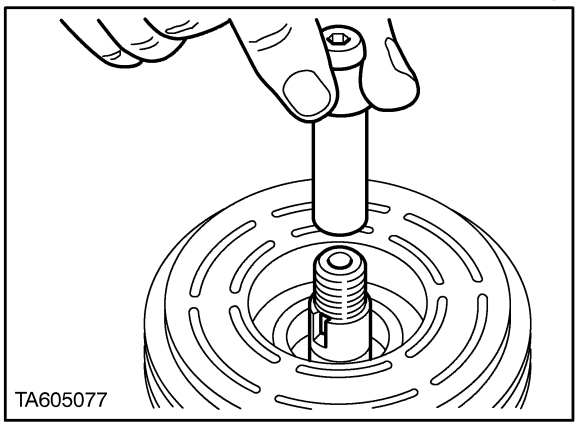

82

3. Ensure the shaft seal ‘O’ ring is installed onto the seal assembly.

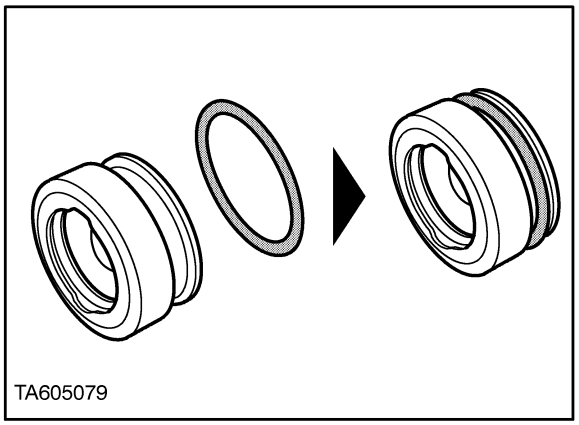

83

4. Dip the new seal assembly in clean refrigerant oil and attach to the seal remover/installer tool.

5. Insert the new seal fully into the hub.

NOTE: *If remover/installer tool is not available, position the seal squarely in the hub and tap gently until fully seated.*

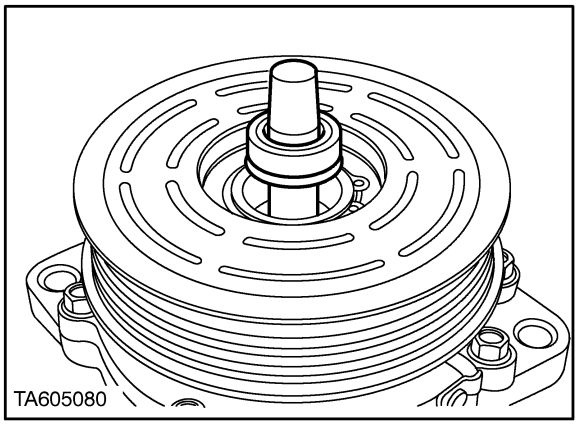

84

6. Install the seal snap ring. If the snap ring has a beveled edge this should face outwards.

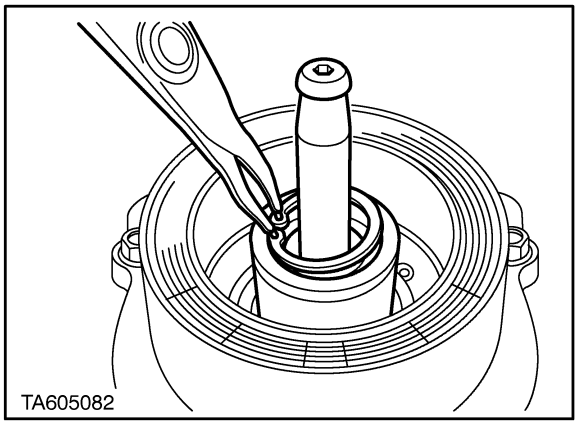

85

7. Install a new felt seal and gently tap into position.

8. Remove the shaft protector and position the shims over the shaft.

9. Reinstall the clutch front plate as described in clutch reassembly.

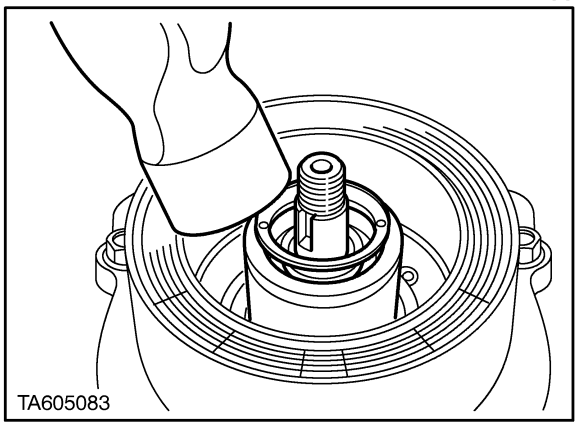

86

CYLINDER HEAD SERVICING

Disassembly

1. Drain the refrigerant oil from the compressor into a clean calibrated container. Measure and record the quantity of oil obtained. This information is required during installation of the new or overhauled unit.

2. Remove the six cylinder head bolts and using a hide mallet, gently tap the cylinder head free. The use of a gasket scraper may also be required to free cylinder the cylinder head from the compressor body.

3. If the valve plate and/or cylinder head are to be reused, carefully remove the gasket using a suitable scraper.

4. Gently pry the valve plate free from the cylinder block and remove the gasket.

5. Inspect the valve plate for damage.

Reassembly

1. Coat the top of the valve plate with clean refrigerant oil and reassemble the cylinder head using the reverse of the disassembly procedure.

2. When installing the gaskets and valve plate ensure they are correctly positioned over the locating pins in the cylinder block.

3. Install the cylinder head bolts and tighten using the sequence shown in Figure 90. Torque initially to 20Nm (14lbf.ft) then finally to 32Nm (24 lbf.ft).

4. When the overhaul is complete add to the compressor a volume of oil equivalent to that drained prior to disassembly.

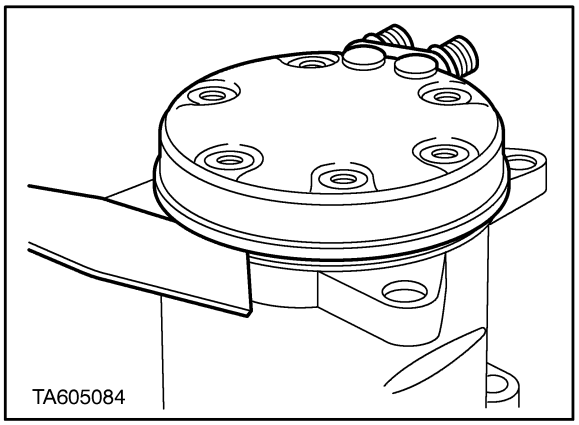

87

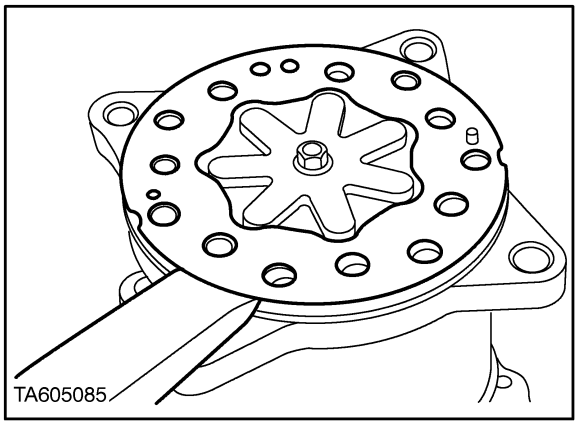

88

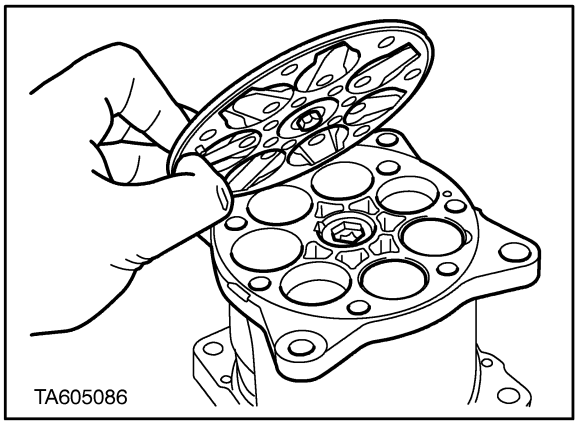

89

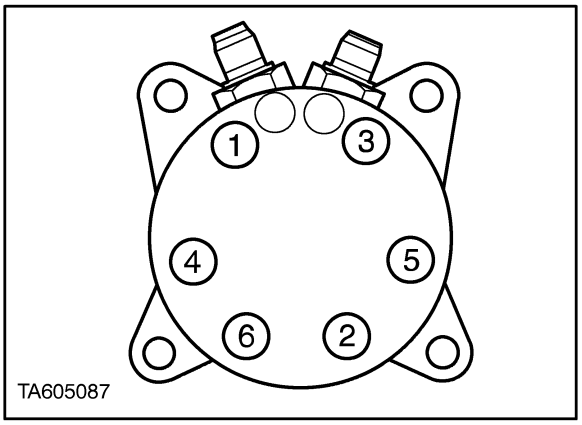

90

INDEX

Air conditioning specifications 9-2
Blower motor and fan assembly 9-40
Cab air filters 9-42
Charging the system 9-36
Component overhaul 9-37
Compressor high low cut-out switch 9-42
Compressor overhaul 9-43
Cylinder head servicing 9-52
Evacuating the system 9-35
Evaporator 9-38
Expansion valve 9-37
Fault finding 9-15
Flushing the system 9-34
Leak testing, discharging and charging the air conditioning system 9-32
Low pressure cut-out switch 9-39
Principals of air conditioning 9-4
Receiver dryer and condenser 9-41
Safety precautions 9-3
Special tools 9-3
Specifications 9-2
System components description and operation 9-8
Temperature cycling control switch 9-39
Testing the air conditioning system 9-15
Torques 9-3

SECTION 10
SPECIAL TOOLS
CONTENTS

ENGINE SPECIAL TOOLS 10-2
COOLING SPECIAL TOOLS 10-2
LUBRICATION SPECIAL TOOLS 10-2
INJECTORS SPECIAL TOOLS 10-3
INJECTION PUMP SPECIAL TOOLS 10-3
TURBOCHARGER SPECIAL TOOLS 10-4
HYDRAULIC SYSTEM SPECIAL TOOLS 10-5
HYDRAULIC PUMP ASSEMBLY WITH VARIABLE DISPLACEMENT CLOSED CENTRE LOAD SENSING (CCLS) SPECIAL TOOLS 10-5
HYDRAULIC LIFT ASSEMBLY WITH TOP LINK SENSING SPECIAL TOOLS 10-6
FIXED DISPLACEMENT GEAR TYPE PUMPS SPECIAL TOOLS 10-7
HYDRAULIC TRAILER BRAKES SPECIAL TOOLS 10-8
REMOTE CONTROL VALVES SPECIAL TOOLS 10-8
BRAKING SYSTEM SPECIAL TOOLS 10-9
STEERING SPECIAL TOOLS 10-9
CLUTCHES SPECIAL TOOLS 10-10
TRANSMISSION SYSTEMS SPECIAL TOOLS 10-11
16 X 16 ELECTROSHIFT TRANSMISSION SPECIAL TOOLS 10-11
8 X 2 TRANSMISSION SPECIAL TOOLS 10-12
16 X 4 DUAL COMMAND TRANSMISSION SPECIAL TOOLS 10-12
REDUCTION GEARBOX ASSEMBLY SPECIAL TOOLS 10-13
24 X 24 DUAL COMMAND TRANSMISSION SPECIAL TOOLS 10-13
FRONT AXLE SPECIAL TOOLS 10-14
MECHANICAL REAR WHEEL DRIVE SPECIAL TOOLS 10-14
FRONT AXLE MECHANICAL TRANSMISSION SPECIAL TOOLS 10-15
AIR CONDITIONING SPECIAL TOOLS 10-16

ENGINE SPECIAL TOOLS

DESCRIPTION	V.L. CHURCHILL TOOL No.	NUDAY TOOL No.	NH TOOL No.
Adjustable Bridge Puller	518	9539	09539
Shaft Protectors	625-A	9212	09212
Step Plate Adaptors	630-S	9210	09210
Bushing Kit	818	9514	09514
Valve Guide Reamer Kit	FT.6202 (SW.502)	2136 (SW.502)	02136
Camshaft Bearings – Remover/Installer Handle	 FT.6203 N6261-A	 1255 (SW.506) 1442	 01225 01442
Water Pump Seal Replacer	FT.6209	4672	T87T-6312-A
Connecting Rod Bush – Removal Installation			 NH 00035 OTC 134-00002
Crankshaft Seal Replacer Front Seal Rear Seal	 NH10-103 FT 6212		 NH 01301

COOLING

(Prior Tool Numbers, where applicable, shown in brackets)

DESCRIPTION	V.L. CHURCHILL TOOL No.	NUDAY TOOL No.	FNH TOOL No.
Water Pump Seal Replacer	FT.6209	4672	T87T-6312-A

LUBRICATION

DESCRIPTION	V.L. CHURCHILL TOOL No.	NUDAY TOOL No.	FNH TOOL No.
Adjustable Bridge Puller	518	9539	09539
Shaft Protectors	625-A	9212	09212
Step Plate Adaptors	630-S	9210	09210

INJECTORS

Application	VL CHURCHILL TOOLS	NUDAY TOOLS
Injector Nozzle Nut Socket	CT9009	8126
Nozzle Reverse Flush Adaptor	CT9024	8124
Injector Cleaning Kit*	DX730	1720
Tallow	Obtain Locally	Obtain Locally
Polishing Sticks	Obtain Locally	Obtain Locally
Timing Gauge	NH 01338	
Timing Gauge	PD67-2	
Timing Fixture	PD67-3	

*Kit consists of:

Nozzle Cleaning Wires – Pressure Chamber Drills – Pressure Chamber Scraper – Valve Seat Scraper – Brass Wire Brush – Pin Vise.

INJECTION PUMP

FUEL INJECTION PUMP

DESCRIPTION General	LESLIE HARTRIDGE TOOL No
Pump Mounting Plate	7244 – 200
Cam Advance Screw Socket	7244 – 125B
Transfer Pump Rotor Box Spanner	7044 – 889
Timing Adaptor Assembly	7144 – 262
Flange Making Tool	7244 – 27
Insert for Flange Making Tool	7244 – 30
Static Timing Gauge	7244 – 449
Relief Valve	7144 – 155
Stirrup Pipe	7144 – 262A
Blank Off Bolt	7144 – 558
Plunger Timing Tool	7244 – 448
Transfer Pressure Adjuster	7244 – 410A
Adaptor Hydraulic Head for Transfer Pressure Gauge	7244 – 382
Advance Measuring Gauge	7244 – 447
Pressure End Plug Test Plug	7244 – 435
Punch and Adaptor Drive Shaft Seal	7244 – 445
Dial	23764
Dial Indicator Holder	ST 183
Dial Indicator Holder Adaptor	89559
Protection Caps	
Head Locating Fitting	7044 – 897
Latch Valve Body Seals	7144 – 18
Latch Valve Restrictor Plug Seal	7144 – 124
Latch Valve Sleeve Nut Seal	7144 – 458C
Throttle Shaft Seals	7144 – 458C
Fuel Shut Off Seals	7144 – 458C
Auto Advance Cap and Plug Seals	7044 – 898

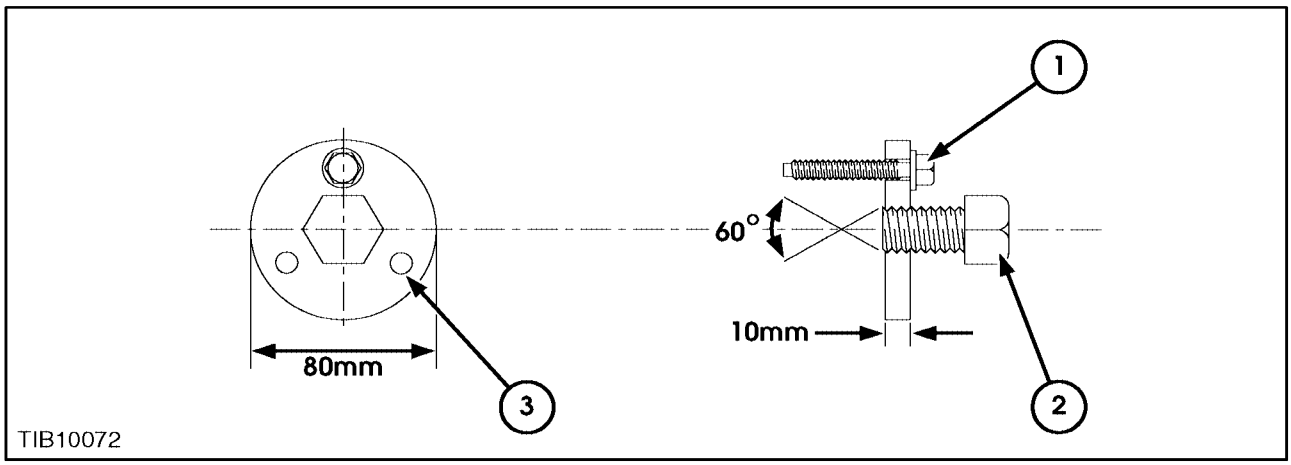

Fuel Injection Pump Drive Gear Puller

1. Bolt 5/16 – UNF x 2 in (51mm), With integral washer (3 Bolts required)
2. Bolt 3/4 x 16 – UNC x 2 in (51mm)
3. Holes 0.375 in (9.5mm) dia on 2.2 in (56.87mm) dia equally spaced material of 0.394 in (10mm) Plate HRLC P&O Steel.

TURBOCHARGER

SEALER

Type	Sealer Anaerobic Low Strength	Part No 82995768

HYDRAULIC SYSTEM SPECIAL TOOLS

HYDRAULIC PUMP ASSEMBLY WITH VARIABLE DISPLACEMENT CLOSED CENTRE LOAD SENSING (CCLS)

DESCRIPTION	TOOL NUMBER	
	V.L. Churchill	FNH Part No (America only)
Pressure Gauge 0-100 lbf/in^2 (0-6.6 bar)	FT. 4096	FNH 02026
Pressure Gauge 0-600 lbf/in^2 (0-42 bar)	FT. 4100	FNH 02027
Pressure Gauge 0-6000 lbf/in^2 (0-414 bar)	FT. 8503A	FNH 02028
Pressure Gauge 0-400 lbf/in^2 (0-30 bar)	FT. 8616	FNH 06653
Elbow-Standby Pressure Test	86246-S36	
Adaptor-Pressure Test	FT. 8503-8	FNH 0705
Adaptor-By-pass Valve Pressure Test	4FT.850 ($^1/_4$" -18NPSF male-$^7/_{16}$" JIC male)	
Adaptor-Standby Pressure Test	4FT.851 (M14 x 1.5 male-$^7/_{16}$" JIC male)	
Adaptor-Steering Flow Test	4FT.852 ($^3/_4$" -18UNS female-$^3/_4$" JIC male)	
Adaptor-Steering Pressure Test	4FT.853 ($^{11}/_{16}$" -16UN to $^7/_{16}$" JIC male)	
Adaptor* -Trailer Brake Pressure Test	4FT.854 (M18-1.5 male to $^7/_{16}$" JIC male)	
Charge Pump Drive Gear Extractor	4FT.856	FNH 00880
By-pass and Dump Valve Extractor	4FT.857	FNH 00878
Flowmeter	MS. 820A or suitable equivalent	FNH 02755
Flowmeter Hoses	Procure locally to suit flowmeter used	
Adaptor-Hose to Flowmeter	Procure locally to suit flowmeter used	
Test Hose-Pressure Testing	Part No 83936707	
Test Hose-Pressure Testing	Part No 83926717	
Hose Clamp	Procure or manufacture locally	
Remote Control Valve Connectors	Procure through New Holland to suit hoses	

*Or suitable M18x1.5 male adaptor to suit test hose on pressure gauge if 83936707 not used

HYDRAULIC LIFT ASSEMBLY WITH TOP LINK SENSING

TOOL	V.L. CHURCHILL	FNH PART No (America Only)
Control Valve Bush Installer	FT. 8510	FNH 02191
Control Valve Bush Locator	FT. 8510–3	FNH 10090
Extension Tool	FT. 8510–1D	FNH 02191
Guide and Stop Adaptor	FT. 8510–1K	FNH 02191
Setting Gauge	FT. 8527	FT. 8527
Control valve Setting Tool		FNH 00014

Lift linkage setting gauge
FT8527 dimensions

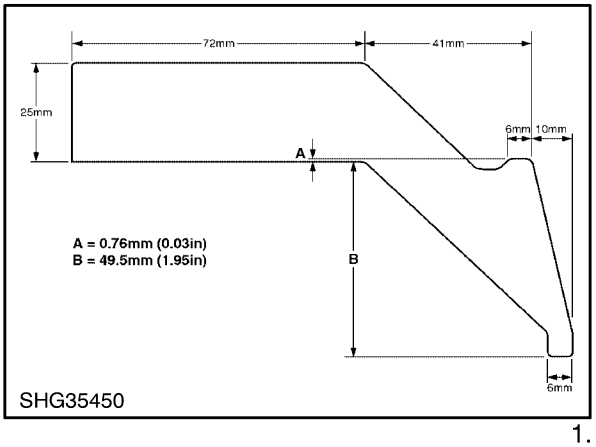

1.

FIXED DISPLACEMENT GEAR TYPE PUMPS

DESCRIPTION	TOOL NUMBER	
	V.L. Churchill	**FNH Part No. (America only)**
Pressure Gauge 0-400 lbf/in^2 (0-30 bar)	FT. 8616	FNH 06653
Pressure Gauge 0-6000 lbf/in^2 (0-414 bar)	FT. 8503A	FNH 02028
Adaptor-Pressure Test	FT. 8503-8	FNH 0705
Adaptor-Steering Flow Test	4FT.852 ($^3/_4$" x 18UNS female-$^3/_4$" JIC male)	
Adaptor-Steering Pressure Test	4FT.853 ($^{11}/_{16}$" -16UN to $^7/_{16}$" JIC male)	
Adaptor -Trailer Brake Pressure Test	4FT.854 (M18 -1.5 male to $^7/_{16}$" JIC male)	
Adaptor-Main Pump Flow/Pressure Test	4FT.858 1-14UNS Female to $^1/_4$" BSP female	
Adaptor-Main Pump Flow/Pressure Test	4FT.858/1 $^1/_4$" BSP male to $^3/_4$" JIC male	
Adaptor-Main Pump Pressure Test	4FT.858/2 $^1/_4$" BSP male to $^7/_{16}$" JIC male	
Adaptor-Steering Pump Flow Test	4FT.859 ($^{13}/_{16}$"-16UN female to $^3/_4$" JIC male)	
Flowmeter	MS. 820A or suitable equivalent	FNH 02755
Test Hose-Pressure Testing	Part No 83936707	
Test Hose-Pressure Testing	Part No 83926717	
Adaptor-Trailer Brake Valve	Part No 81862770	
Plug	Part No 83900652	
Seal	Part No 81800812	
Remote Control Valve Connectors	Procure through New Holland	

HYDRAULIC TRAILER BRAKES

DESCRIPTION	TOOL NUMBER	
	V.L. Churchill	FNH Part No
Adaptor Trailer Brake Coupling to Test Hose	4FT.854	
Test Hose–Pressure Testing (From NH Logistics)		83936707
Pressure Gauge 0–6000 lbf/in^2 (0–414 bar)	FT.8503A	FNH 02028
Adaptor–Pressure Gauge to Test Hose	FT.8503–8	FNH 0705

REMOTE CONTROL VALVES

Flowmeter	VL Churchill MS820A, FNH 02755, FNH 02760 or suitable equivalent
Flowmeter Hoses	Procure locally to suit Flowmeter used
Coupler Remover	North America FNH 00095
Slipper Seal Installation Tool	VL Churchill FT 8611

BRAKING SYSTEM SPECIAL TOOLS

DESCRIPTION	V.L. CHURCHILL LTD TOOLS	NUDAY TOOLS	FNH
Step Plates	630S	9210	FNH09210
Drive Pinion Pre-Load Gauge	T.4062	(Pull Scale)	-
Internal/External Puller	943	9507	FNH09507
Slide Hammer	943S	9567	FNH09567
Pulling Attachments: Small	951	9190	FNH09190
Pullers: Medium	1002	9198	FNH09198
Large	1003	9516	FNH09516
Handbrake Pinion Locknut Wrenches	FT.2010	-	-
Bushing Kit	818	-	FNH09514

STEERING SPECIAL TOOLS

DESCRIPTION	NEW HOLLAND TOOL NUMBER	V.L.CHURCHILL TOOL NUMBER
Pressure Gauge (0-6000 lb/in^2)	292870	FT8503A
Roto-glyd Seal Installer	294056	-
Adaptor (Gauge to Hose)		FT8503-8
Test Hose Part No. 83936707 Adaptor (Test hose to tractor tube) 7/16 JIC Male x 9/16 JIC Male		

CLUTCHES SPECIAL TOOLS

Description	V.L. Churchill Ltd Tools	Nuday Tools
Clutch Friction Disc Locator	FT.7102 (SW.14)	1262 (SW.509)
Bushing Kit	818	9514 (818)
Puller	1002	9198 (1002)
Puller Attachment	951	9190 (951)
Puller	943	9507 (943)
Slide Hammer	943S	9567 (943S)
Step Plate Adaptor	630–12	–

TRANSMISSION SYSTEMS SPECIAL TOOLS

16 × 16 ELECTROSHIFT TRANSMSISSION

DESCRIPTION	TOOL NUMBER (V.L. Churchill Ltd.)	TOOL NUMBER (FNH-A No.)
16 x 16 Transmission Overhaul Kit Comprising of:-	4FT500	FNH-00865
Handle (for use with resizer tool)	4FT501	FNH-00866
Tapered Sleeve, C3/C4 Piston Seal Expander	4FT502	FNH-00867
Tapered Sleeve, C1/C2 Piston Seal Expander	4FT503	FNH-00868
Piston Installer (Pusher)	4FT504	–
Tapered Sleeve C3/C4 Piston Seal Installer	4FT505	FNH-00869
Tapered Sleeve C1/C2 Piston Seal Installer	4FT506	FNH-00870
Seal Resizer C1/C2/C3/C4 Piston Seal	4FT507	FNH-00871
Clutch Piston Return Spring Compressor	4FT508	FNH-00872
FWD Transfer Tube Remover	4FT509	FNH-00873
Transmission Stand Bracket	4FT510	–
Gauge Rolled In Tube Replacement	4FT511	–
Gauge Rolled In Tube Expander	4FT512	–
Bypass Connector (Transmission Pressure Test)	4FT951	FNH-00875
Diagnostic Switch	4FT950	FNH-00874
Additional tools required not supplied in the above kit:		
Limp Home Harness	4FT952	FNH-00876
Adaptor	80265235	-
Slide Hammer	954C	–
Puller	951 or 9190	FNH-09190
Pulling Attachment	1002 or 9198	FNH-09198
Pressure Testing Switch Bypass Plug	NH.21-115	-

8 × 2 TRANSMISSION

DESCRIPTION	V.L. CHURCHILL TOOLS	NUDAY LTD TOOLS	NH
Heavy Duty Ratchet	P61	9162	
Slide Hammer	MS.284	9567	FNH09567
Shaft Protectors	625A	9212	FNH09212
Step Plates	630S	9210	FNH09210
Puller Legs	930B	9521	FNH09521
Puller	938	9506	FNH09506
Internal/External Puller	943	9507	FNH09507
Slide Hammer	943S	9567	FNH09567
Pulling Attachments:			
Small	951	9190	FNH09190
Large	952	9526	FNH09526
Pullers:			
Small	1001	9196	FNH09196
Medium	1002	9198	FNH09198
Large	1003	9516	FNH09516

16 × 4 DUAL COMMAND TRANSMISSION

Description	V.L. Churchill Ltd Tools	Nuday Tools	FNH
Slide Hammer	MS.284	9567 (943S)	FNH 09567
Step Plates	630S	9210 (630S)	FNH 09210
PTO Clutch Compressor	N–775	1312 (N–775)	FNH 01312
Puller Legs	930B	9521 (930B)	FNH 09521
Puller	938	9506 (938)	FNH 09506
Internal / External Puller	943	9507 (943)	FNH 09507
Slide Hammer	943S	9567 (943S)	FNH 09567
Pulling Attachment			
Small	951	9190 (6951)	FNH 09190
Large	952	9526 (962)	FNH 09526
Puller			
Medium	1002	9198 (1002)	FNH 09198
Large	1003	9516 (1003)	FNH 09516

Spacer Gauge – Dual Command	FT.5000(SW523)	1303 (SW523)	FNH 01303
Planetary Shaft Puller	FT.5004	4721	FNH 04721
Pressure Gauge	FT.8616	FNH 06653	
Adaptor	FT.8503	FNH 00705	

REDUCTION GEARBOX ASSEMBLY

Description	V.L. Churchill Ltd Tools	Nuday Tools	FNH
Step Plates	630S	9210 (630S)	FNH09210
Internal / External Puller	943	9507 (943)	FNH09507
Slide Hammer	943S	9567 (943S)	FNH09567

DUAL COMMAND TRANSMISSION (24 × 24 DUAL COMMAND)

Description	Tool Number	
	(V.L. Churchill Ltd.)	(FNH–A No.)
Piston Installer (Pusher)	4FT504	–
Tapered Sleeve C1/C2 Piston Seal Installer	4FT505	FNH–00869
Clutch Piston Return Spring Compressor	4FT508	FNH–00872
Diagnostic Switch	4FT950	FNH–00874
M10 Studding (I metre)	Purchase Locally	
Silver Steel Rod 0.236 in (6mm)Dia x 6 in (152mm) long 3 off	Purchase Locally	

FRONT AXLE

DESCRIPTION	V.L. CHURCHILL LTD TOOLS	NUDAY TOOLS	FNH
Idler Gear Bearing Fixture	FT3169	–	–
Pulling Attachment:			
Small	951	9190	FNH09190
Puller:			
Large	1003	9516	FNH09516

MECHANICAL REAR WHEEL DRIVE

DESCRIPTION	V.L. CHURCHILL LTD TOOLS	NUDAY TOOLS	FNH
Shaft Protectors	625A	9212	FNH09212
Step Plates	630S	9210	FNH09210
Step Plate Adaptor	630T	9211	FNH09211
Taper Base	370	–	–
Slave Ring	CT.9056	–	–
Planetary Ring Gear Remover/Replacer	FT.4500 (SW.6)	2122 (SW.6-48) 2123 (SW.6-56)	FNH02122 FNH02123
Differential Bearing Pre-Load Gauge	FT.4501 (SW.7)	2141 (SW.505)	FNH02141
Drive Pinion Pre-Load Gauge	T.4062	(Pull Scale)	–
Drive Pinion Pre-Load Gauge Adaptor	T.4062A		–
Puller Legs	930B	9521	FNH09521
Puller	938	9506	FNH09506
Internal/External Puller	943	9507	FNH09507
Slide Hammer	943S	9567	FNH09567
Pulling Attachments:			
Small	951	9190	FNH09190
Large	952	9526	FNH09526
Pullers:			
Small	1001	9196	FNH09196
Medium	1002	9198	FNH09198
Large	1003	9516	FNH09516
Bushing Remover	818	–	FNH09514

FRONT AXLE MECHANICAL TRANSMISSION SPECIAL TOOLS

Warning – The tools marked below with an **(X)** are **ESSENTIAL** for the operations described in this section. To work in safety and obtain the best results whilst saving time and energy, these essential tools should be supplemented by the specific tools listed below and other tools which are to be made from the drawings provided in this manual.

List of specific tools required for the various operations described in this section.

	293460	Front axle overhaul stand.
	291517	Hook for removal–installation of the front differential assembly.
	293743	Overhaul support for front axle differential casing.
X	**293878**	Wrench for threaded adjustment ring of front bevel drive pinion.
X	**293391**	Pinion bearing adjustment tool.
X	**293510**	Universal gauge for pinion bearing adjustment.
	293400	Universal gauge for positioning of front bevel drive pinion.
X	**293665**	Wrench for front differential case bearing adjustment nut (models 85 hp and 95 hp).
X	**293880**	Wrench for front axle wheel hub bearing retaining nut
X	**293882**	Pair of grips for removal of front axle hub bearings.
	292888	Dowels (M 12 x 1.25) for front axle and cover.
	293812	Dowels (M 16 x 1,25) for removal/installation of front axle wheels.
X	**293857**	Front axle pivot pin removal tool.
X	**292161**	Front axle pivot bearing outer ring removal tool.
X	**292220**	Tool for measurement of rolling drag torque of front axle bearings.
	293889	Guide for installation of axle shafts on stub axle housing
	292870	Universal kit for testing oil pressure for front axle diff. lock engagement.

LOCALLY FABRICATED TOOLS

Front pinion shaft holding tool –
fabricate from 4WD shaft coupling

AIR CONDITIONING SPECIAL TOOLS

SPECIAL TOOLS

Certified Refrigerant Recover,Recycling and Recharge Equipment suitable for the type of refrigerant gas used on tractor are required when servicing air conditioning systems.

This special equipment is available through recognised suppliers of air conditioning equipment. Refer to the Tool supplier for details on the latest equipment available for servicing the air conditioning system.

Vacuum/charge Portable system	New Holland Tool No.294030
Recovey/recharge Portable system	New Holland Tool No.294048
Evaporator and condenser cleaner	New Holland Tool No.293831
Expansion valve tape	New Holland Tool No.293826
Electronic Gas Leak Detector	New Holland Tool No.294036
Manifold Gauge Set (Where required)	OTC/V.L Churchill Ltd Part No FNH00172
Quick Release Coupling Tool	New Holland Tool No.295031
COMPRESSOR TOOLS:	
Sanden SDH715 KIt	OTC/V.L Churchill Ltd Part No. NH.50–100